Safety Precaution

Precautions to take before servicing high voltage system

DANGER

- Since hybrid vehicles contain a high voltage battery, if the high voltage system or vehicles are handled incorrectly, this might lead to a serious accidents like electric shock and electric leakage.

WARNING

- Be sure to shut off the high voltage by removing the safety plug before performing inspection or repairing the high voltage system.
  (Refer to "High Voltage Shut-off Procedures")
- The responsible worker keeps the removed safety plug to prevent the plug from being connected by mistake.
- Do not keep any metal objects (watch, ring etc.) while working on the high voltage system, which it can cause serious accidents like electric shock.
- Before beginning work on the high voltage system, the worker should wear personal protective equipment to prevent safety accidents.
  (Refer to "Personal Protective Equipment")
- Never allow workers who are not wear personal protective equipment to touch the high voltage system. High voltage components should be covered with an insulation sheet to prevent safety accidents.
- Use insulation tools when working on the high voltage system.
- Put the removed high voltage components on the insulation mat.

Information

- All the high voltage wiring and connectors are orange.
- A caution label for high voltage is attached to the high voltage components.
- High voltage components :
  High Voltage Battery Pack Assembly, Power Relay Assembly (PRA), BMS ECU, Hybrid Power Control Unit (HPCU), Hybrid Drive Motor, HSG, Electric A/C Compressor, Low DC/DC Converter (LDC), Power Cable, Electric Compressor etc.

CAUTION

- Inform of danger of high voltage by putting the "high voltage caution" on the vehicle as image below.

SAMPLE

DANGER

High Voltage : Do not touch during operation.

Person in charge : _____

Copy this page and put it after folding on the roof of the vehicle in service.

DANGER

High Voltage : Do not touch during operation.

Person in charge : _____

Personal Protective Equipment

Name	Illustration	Description
Insulation glove		Used when inspecting or working on the high voltage components [Insulation performance : 1000V / 300A or above]
Insulation shoes		Used when inspecting or working on the high voltage components

Insulation clothes		Used in the case below • During Removal & installation or inspection of the high voltage battery terminals or wiring, which spark might happen. • During working on the high voltage battery pack assembly.
Insulation helmet	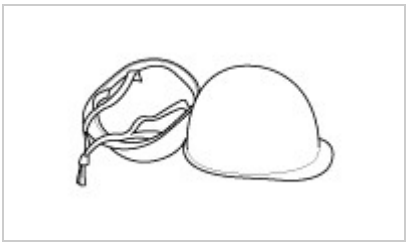	
Safety glasses		
Face shield		
Insulation mat	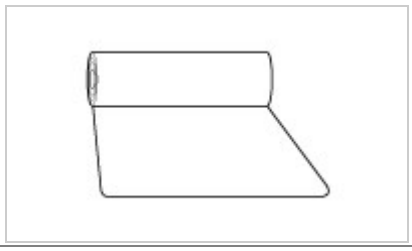	Putting the removed high voltage components on the insulation mat to prevent safety accidents.
Insulation sheet	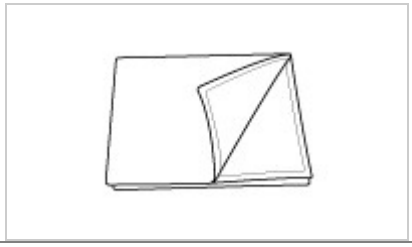	Covering the high voltage components with insulation sheet to prevent people who don’t wear the personal protective equipment from safety accidents.

Precautions to take when handling power cable

- Immediately insulate the high voltage terminal after reconnecting the terminal (use insulation tape).
- Tighten the high voltage terminal screw to spec torque.
- Be careful that (+) and (-) terminals do not come in contact when connecting or disconnecting power cable and busbar.

Precautions to take when handling high voltage battery

- When transporting high voltage battery, be sure to keep it flat and leveled. Failure to do so may decrease the battery performance and/or its life-span.
- High voltage battery"s performance may decrease if it is exposed to high temperature for a lengthy period. As a result, heat-treatment after painting must not exceed 70°C/ 30 minutes, or 80°C/ 20 minutes.

Precautions in case of fire on high voltage battery system

- If the fire occurs indoor, ventilate the area to let out hydrogen gas.
- ACB fire extinguisher is recommended for putting out the fire. (water may also be used).

Precautions in case of high voltage battery gas or electrolyte leakage

-

Turn OFF the Start button. Keep the Smart Key at least 2 meters away from the vehicle to prevent unintended engine start.

- Gas is hydrogen and alkaline vapor. If the leakage is indoor, ventilate the area immediately and evacuate to a safe location.
- If the leaked liquid comes in contact with skin, immediately neutralize the affected area with boric acid solution, then clean with tap water or saline solution.
- If the leaked vapor or liquid gets in the eye, immediately clean the affected eye with water then get medical attention.
- If the gas leakage is caused by high temperature, then do NOT use the battery until the high voltage battery fully cools down to room temperature.

Precautions when handling the vehicle after an accident

- Be sure to wear insulated gloves (or rubber gloves), protective goggles, insulated suite, and insulated boots.
- Do NOT touch bare cable under any condition.
  (Refer to "Precautions when handling power cable")
- In case of vehicle fire, put out the fire with ABC extinguisher. Do NOT use water (usage of large volume of water is okay, but small volume can worsen the situation).
- If more than half of the vehicle is submerged, then do NOT go near the Safety Switch or other high voltage related components. If such a component must be accessed, then move the vehicle to the safe location first before handling the component.
- Gas is hydrogen and alkaline vapor. If the leakage is indoor, ventilate the area immediately and evacuate to a safe location.
- If the leaked liquid comes in contact with skin, immediately neutralize the affected area with boric acid solution, then clean with tap water or saline solution.
- Refer to "High voltage cut-off procedure" if the high voltage needs to be cut off.

Preparations when servicing the accident vehicle

- Be sure to wear insulated gloves (or rubber gloves), protective goggles, insulated suite, and insulated boots.
- Boric Acid Power or Solution
- ABC Extinguisher
- Towel for cleaning electrolyte
- Vinyl tape (for insulating terminal)
- Mega ohm tester (for checking high voltage)

Precautions in case HEV is left unattended for a lengthy period

- Turn OFF the Start button. Keep the Smart Key at least 2 meters away from the vehicle to prevent unintended engine start.
- We recommend that HEV is driven at least 1 time for over 30 minutes every 2 months to protect and manage the high voltage battery (inquire at relevant team in HMC).
- When inspecting or exchanging the auxiliary battery, check high voltage battery SOC reset related problems.

Hybrid Vehicle Refrigerant Recovery / Charging Precautions

- Since the electric compressor uses high-voltage, you should use POE oil which have high Volumetric Resistivity.
- Do not use the same A/C recovery / charging station as conventional belt-driven compressors.

WARNING

- If the POE oil of the system gets mixed with PAG oil, then dielectric breakdown due to decreased volumetric Resistivity can occur and inoperative A/C compressor may result, A/C compressor may not work

High Voltage Shut-off Procedures

WARNING

- Be sure to read and follow the "General Safety Information and Caution" before doing any work related with the high voltage system. Failure to follow the safety instructions may result in serious electrical injuries.
- Be sure to read and follow the "High Voltage Shut-off Procedures" before doing any work related with the high voltage system. Failure to follow the safety instructions may result in serious electrical injuries.

Information

- High voltage components :
  High Voltage Battery Pack Assembly, Power Relay Assembly (PRA), BMS ECU, Hybrid Power Control Unit (HPCU), Hybrid Drive Motor, HSG, Electric A/C Compressor, Low DC/DC Converter (LDC), Power Cable, Electric Compressor etc.

1. Turn the ignition switch OFF and disconnect the auxiliary 12V battery negative (-) terminal.

2. Remove the safety plug cover (A).

3. Unfasten the hook (A) and then remove the safety plug (C) by pulling the lever (B) to the direction of arrow.

4. Wait for more than 5 minutes so that the capacitor in the high voltage system can be fully discharged.

5. Measure the voltage between the inverter terminals to check that the capacitor in the inverter is discharged completely.
   (1) Remove air cleaner assembly and air duct.
   (Refer to Engine Mechanical System - "Air Cleaner")

   (2) Disconnect the inverter power cable (A).

Information

- Disconnect the inverter power cable as the procedures below.

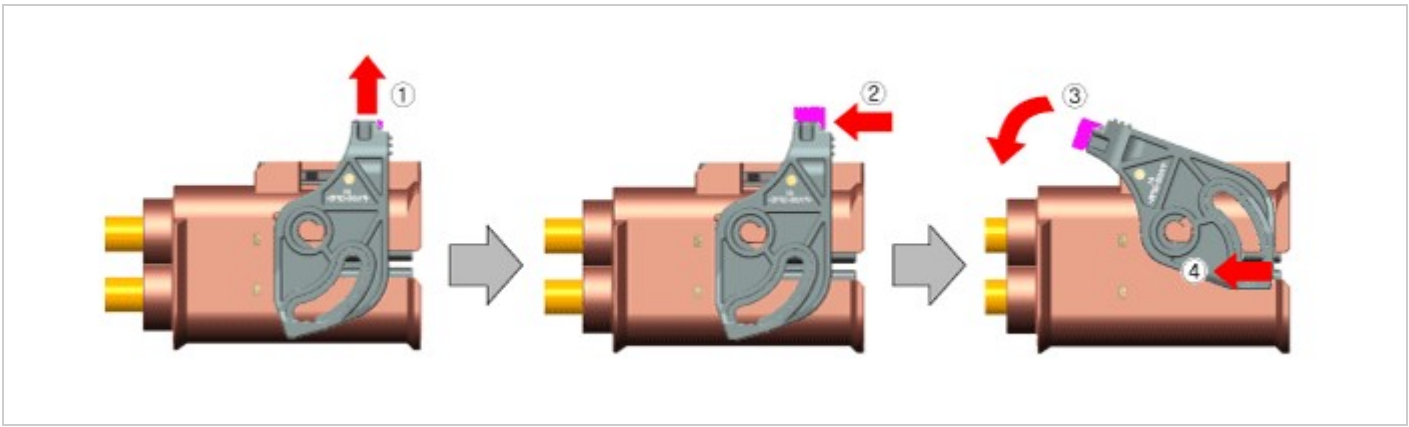

(3) Measure the voltage between the inverter (+) terminal and the inverter (-) terminal.

Less than 30V : High voltage circuit properly shut
More than 30V : Fault on high voltage circuit

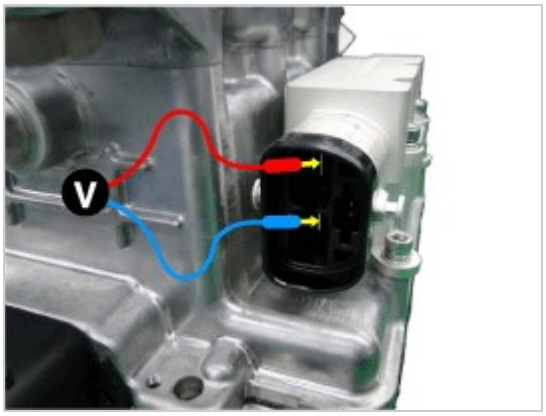

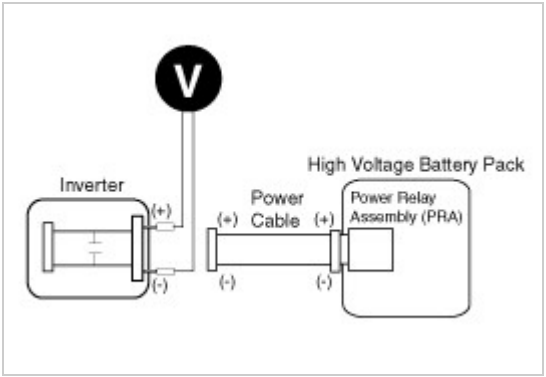

WARNING

- If measured more than 30V, check if the safety plug is removed completely.If measured more than 30V despite the safety plug is removed, there can be serious problems on the high voltage circuit. In this case, check DTC and never touch the high voltage system circuits.

Body (Interior and Exterior)

Specifications

Items		Specification
Hood	Type	Front openine type, rear hinged, stay rod type
Front Door	Construction	Front hinged, frame door construction
	Regulator system	Wire drum type
	Locking system	Pin-fork system
Rear Door	Construction	Front hinged, frame door construction
	Regulator system	Wire drum type
	Locking system	Pin-fork system
Liftgate	Type	Front hinged, gas lifter type
Seat Belts	Front	3 point type with Emergency Locking Retractor (E.L.R)
	Rear	3 point type with Emergency Locking Retractor (E.L.R)

Tightening Torque

Items			N.m	Kgf.m	lb-ft
Front and rear doors	Door hinge to body		37.3 - 41.2	3.8 - 4.2	27.5 - 30.4
	Door hinge to door		21.6 - 26.5	2.2 - 2.7	15.9 - 19.5
	Door checker to door		3.9 - 5.9	0.4 - 0.6	2.9 - 4.3
	Door checker to body		16.7 - 21.6	1.7 - 2.2	12.3 - 15.9
	Door glass mounting bolt		8.8 - 11.8	0.9 - 1.2	6.5 - 8.7
	Outside handle base mounting bolt	Handle	2.0 - 2.9	0.2 - 0.3	1.4 - 2.2
		Cover	7.8 - 10.8	0.8 - 1.1	5.8 - 8.0
	Door channel mounting bolts		3.9 - 5.9	0.4 - 0.6	2.9 - 4.3
	Door latch mounting bolts		7.8 - 14.7	0.8 - 1.5	5.8 - 10.8
	Door module mounting bolts		8.8 - 13.7	0.9 - 1.4	6.5 - 10.1
	Door striker mounting bolts		18.6 - 28.4	1.9 - 2.9	13.7 - 21.0

Liftgate	Liftgate hinge to body	21.6 - 26.5	2.2 - 2.7	15.9 - 19.5
	Liftgate hinge to tail gate	7.8 - 11.8	0.8 - 1.2	5.8 - 8.7
	Liftgate guide bumper screws	6.9 - 8.8	0.7 - 0.9	5.1 - 6.5
	Liftgate latch mounting bolts	6.9 - 10.8	0.7 - 1.1	5.1 - 8.0
	Liftgate striker mounting bolts	21.6 - 26.5	2.2 - 2.7	15.9 - 19.5
Hood	Hood hinge to body	21.6 - 26.5	2.2 - 2.7	15.9 - 19.5
	Hood hinge to hood	21.6 - 26.5	2.2 - 2.7	15.9 - 19.5
	Hood latch to body	7.8 - 11.8	0.8 - 1.2	5.8 - 8.7
Seat	Front seat mounting bolts	49.0 - 63.7	5.0 - 6.5	36.2 - 47.0
	Rear seat mounting bolts	16.7 - 25.5	1.7 - 2.6	12.3 - 18.8
Seat belt	Height adjuster mounting bolts	39.2 - 53.9	4.0 - 5.5	28.9 - 39.8
	Front seat belt upper anchor mounting bolt	39.2 - 53.9	4.0 - 5.5	28.9 - 39.8
	Front seat belt pretensioner mounting bolt	39.2 - 53.9	4.0 - 5.5	28.9 - 39.8
	Rear seat belt lower anchor mounting bolts	39.2 - 53.9	4.0 - 5.5	28.9 - 39.8
	Rear center seat belt retractor mounting bolts	39.2 - 53.9	4.0 - 5.5	28.9 - 39.8
	Rear seat belt retractor mounting bolt	39.2 - 53.9	4.0 - 5.5	28.9 - 39.8
	Seat belt buckle mounting bolt	39.2 - 53.9	4.0 - 5.5	28.9 - 39.8
Outside rearview mirror	Outside rearview mirror mounting nuts	6.9 - 10.8	0.7 - 1.1	5.1 - 8.0
Fender	Fender panel mounting bolts	7.8 - 11.8	0.8 - 1.2	5.8 - 8.7
	Fender panel mounting nut	4.9 - 8.8	0.5 - 0.9	3.6 - 6.5
Wiper arm	Wiper arm mounting nuts	22.6 - 26.5	2.3 - 2.7	16.6 - 19.5
Sunroof	Sunroof mounting nuts	3.9 - 5.9	0.4 - 0.6	2.9 - 4.3
	Sunroof mounting bolts	7.8 - 11.8	0.8 - 1.2	5.8 - 8.7
Rear spoiler	Rear spoiler mounting nuts	5.9 - 6.4	0.6 - 0.65	4.3 - 4.7

Special Service Tools

Tool (Number and name)	Illustration	Use
09880-4F000 Hog ring clip installer	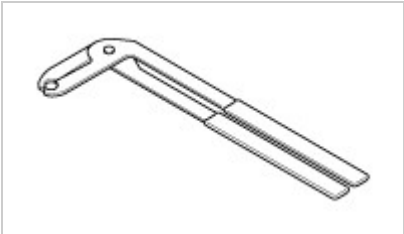	Hog ring clip installation

Troubleshooting

Symptom	Passible Cause	Remedy (Refer to page)
Water leaks from panorama sunroof	Deteriorated roof lid weatherstrip	Replace
	Excessive roof lid-to-body clearance and improperly fitted weatherstrip	Adjust
Wind noise around sunroof	Loose or deformed deflector, gaps in body work	Retighten adjust or replace
Noise created by moving sunroof lid	Foreign particles lodged in guide rail	Check drive cable and guide rails for foreign particles
	Loose guide rails and lid	Retighten
Motor runs but sunroof does not move or moves only partially	Foreign particles lodged in guide rail	Adjust or replace
	Incorrect engagement of motor pinion with drive cable	
	Decrease in motor''s clutch slipping force	
	Increased sunroof sliding resistance or interference of sunroof with drive cables, weatherstrip, etc. due tomal adjustment of sunroof	
Noise in motor (clutch slipping noise from motor when sunroof is fully opened or closed) is considered as normal	Incorrect engagement of motor pinion with drive cable	Check pinion installation and
		Re-tighten motor
	Worn out or damaged motor pinion bearing	Replace motor assembly
	Worn out or deformed drive cable	Replace
Door glass fails to operate up and down	Incorrect window glass installation	Adjust position
	Damaged or faulty regulator arm or regulator	Correct or replace
Door does not open or close completely	Incorrect door installation	Adjust position
	Defective door check assembly	Correct or replace

	Door hinge requires grease	Apply grease
Hood does not open or close completely	Striker and latch not properly aligned	Adjust
	Incorrectly installed hood	Adjust
	Incorrect hood bumper height	Adjust
Water leaks through windshield and rear window	Defective seal	Fill with sealant
	Defective flange	Correct

Body (Interior and Exterior)

Component Location

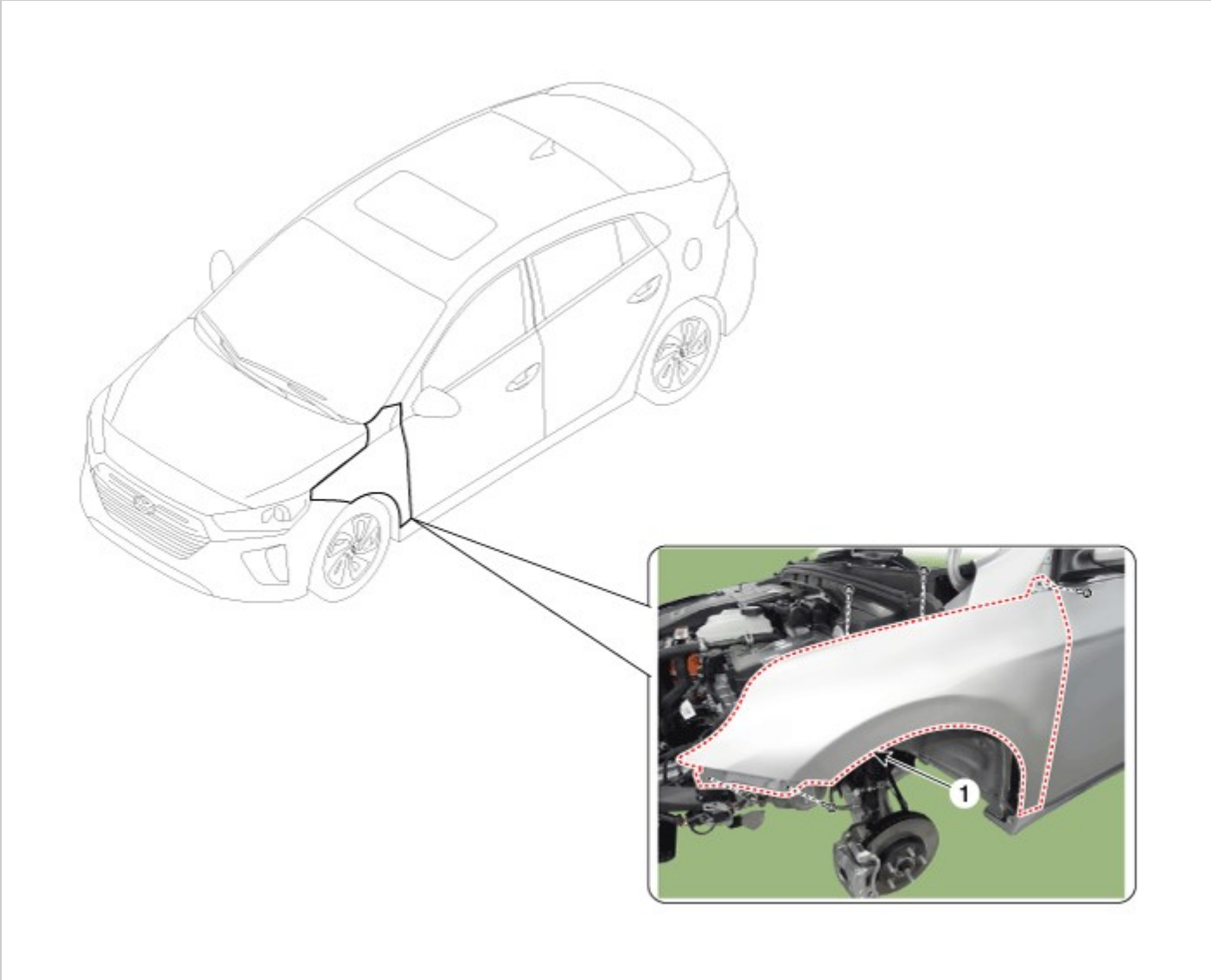

1. Fender assembly

Body (Interior and Exterior)

Replacement

NOTICE

- When removing the fender, wrap protective tape around a screwdriver or remover not to damage components
- Put on gloves to prevent hand injuries

Information

- When removing the clips, use a clip remover.

1. Remove the front bumper.
   (Refer to Front Bumper - "Front Bumper Cover")
2. Remove the head lamps.
   (Refer to Body Electrical System - "Head Lamps")
3. Remove the front wheel guard.

(Refer to Body Side Molding - "Front Wheel Guard")

4. Using a screwdriver or remover, remove the delta garnish (A).

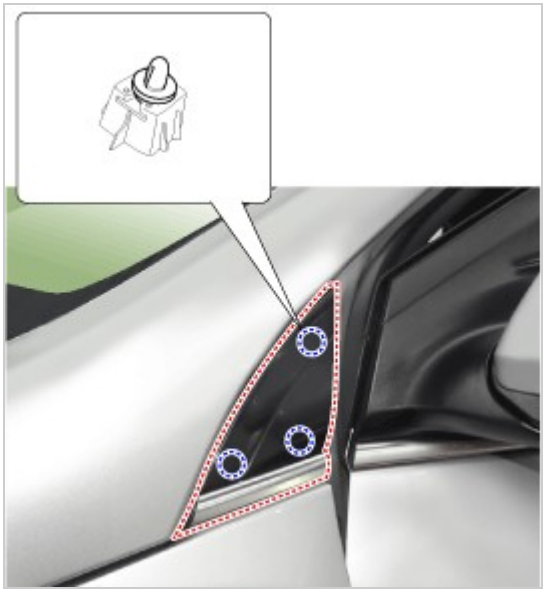

5. Remove the front bumper side mounthing bracket (A) after loosening the bolts.

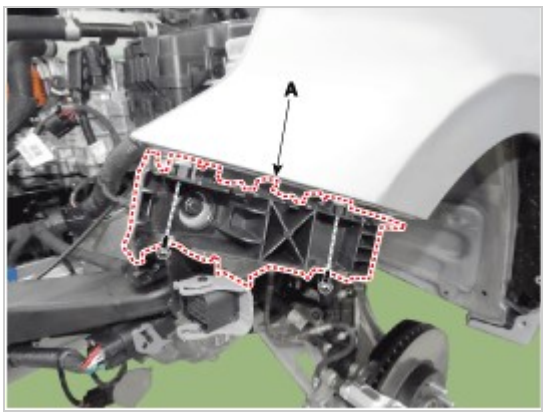

6. After loosening the mounting nut and bolts, remove the fender assembly (A).

Tightening torque :
Bolt : 7.8 - 11.8 N.m (0.8 - 1.2 kgf.m, 5.8 - 8.7 lb-ft)
Nut : 4.9 - 8.8 N.m (0.5 - 0.9 kgf.m, 3.6 - 6.5 lb-ft)

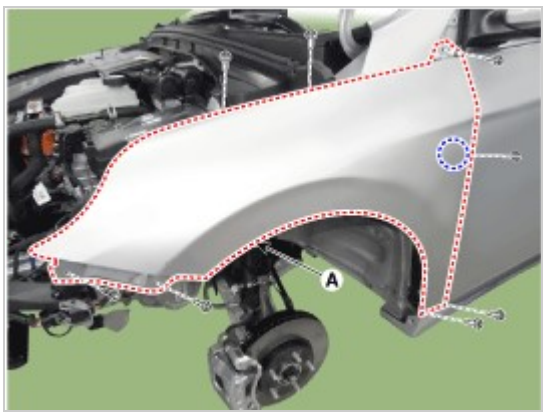

7. To install, reverse the removal procedure.

Information

- Make sure the connector is plugged in properly.
- Replace any damaged clips (or pin-type retainers).

Body (Interior and Exterior)

Adjustment

1. After loosening the hinge (A) mounting bolt, adjust the hood (B) by moving it up and down or from side to side and tighten the bolt.
2. Adjust the hood height by moving the hood overslam bumpers (C) up and down.
3. After loosening the hood latch (D) mounting bolts, adjust the latch by moving it up and down or from side to side.

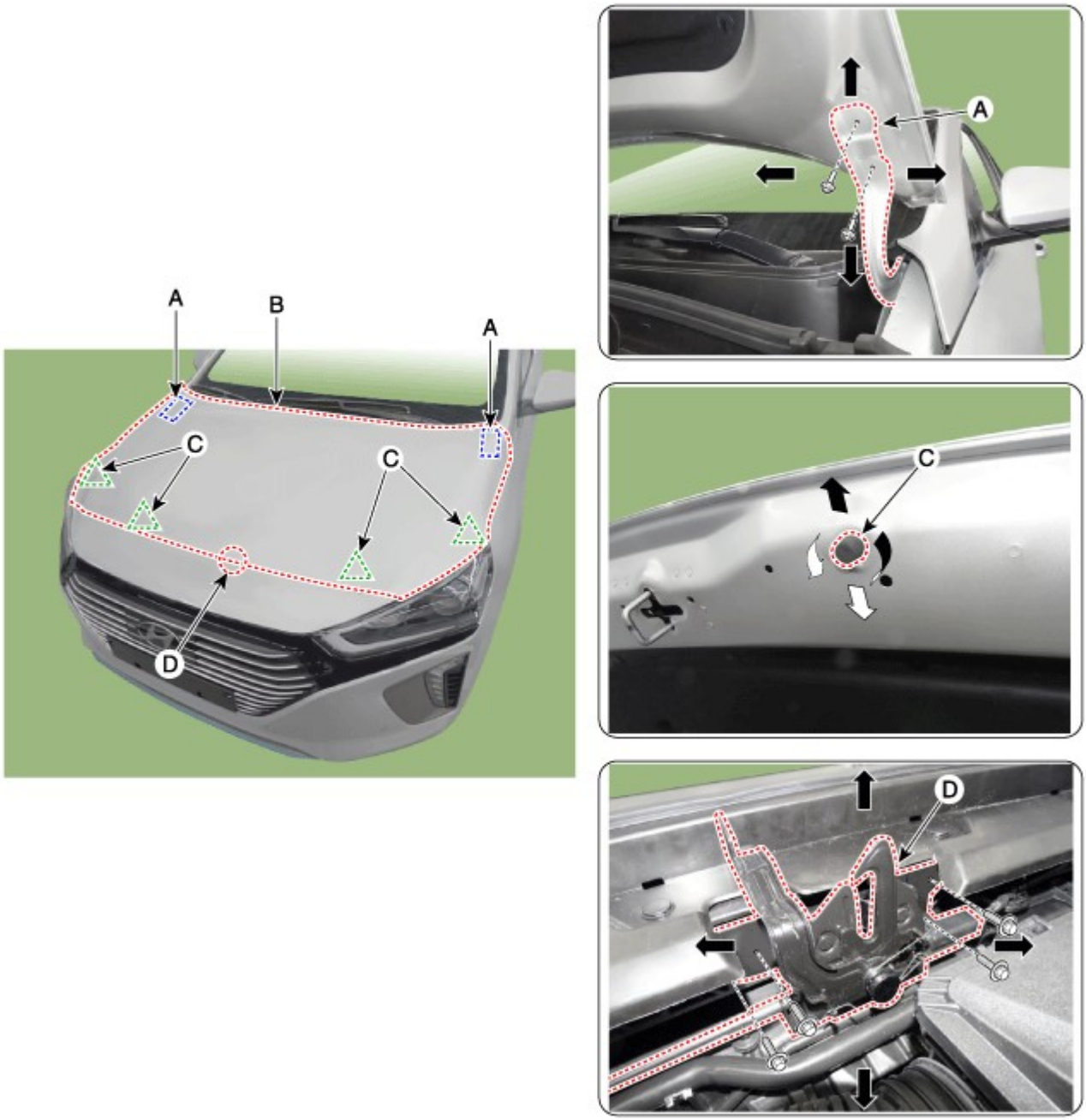

Component Location

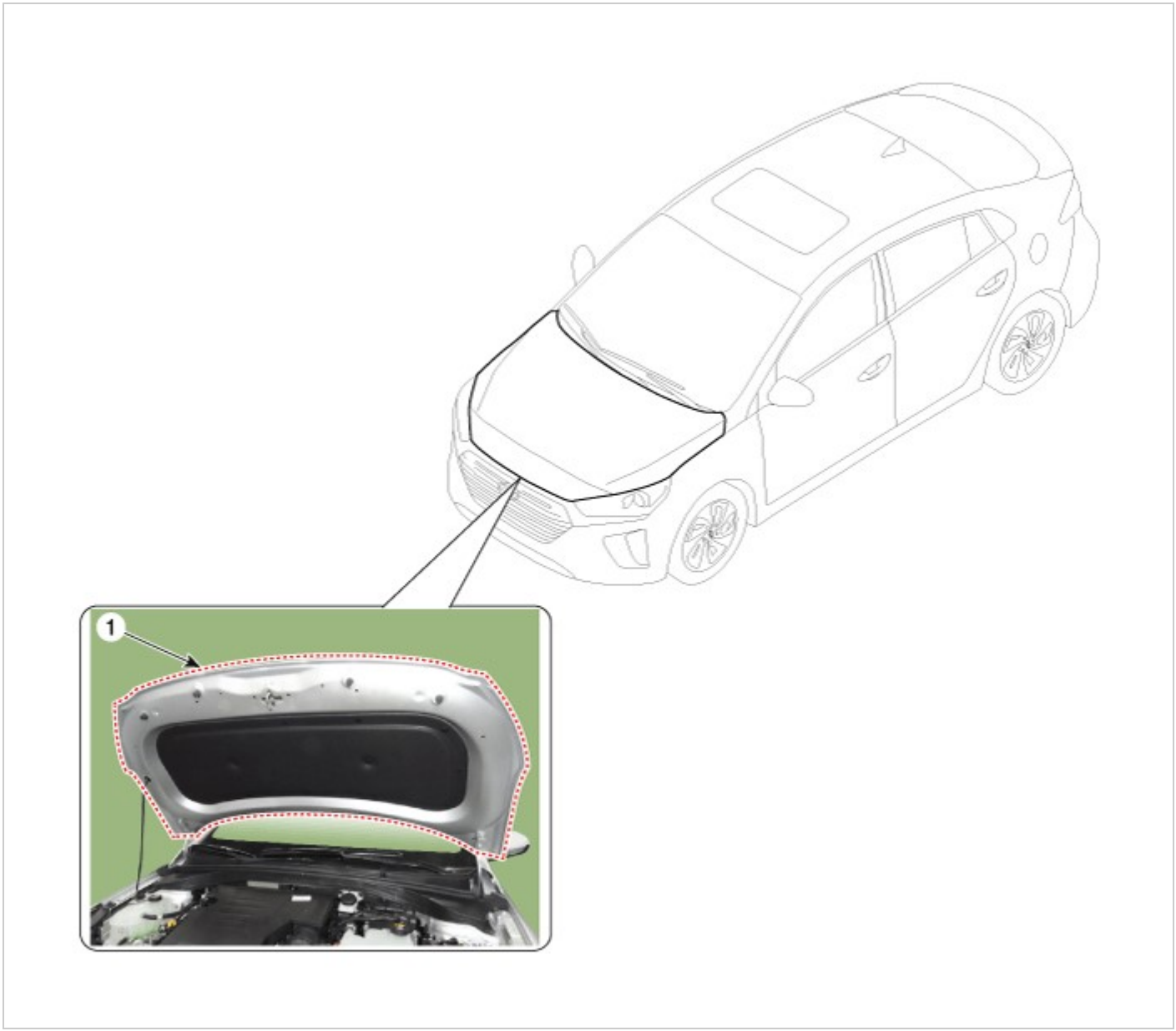

1. Hood assembly

Replacement

NOTICE

- When removing the fender, wrap protective tape around a screwdriver or remover not to damage components.

Information

- Removing or installing the hood requires an assistant.

1. After loosening the hood hinge (A) mounting bolts, remove the hood assembly (B).

   Tightening torque :
   21.6 - 26.5 N.m (2.2 - 2.7 kgf.m, 15.9 - 19.5 lb-ft)

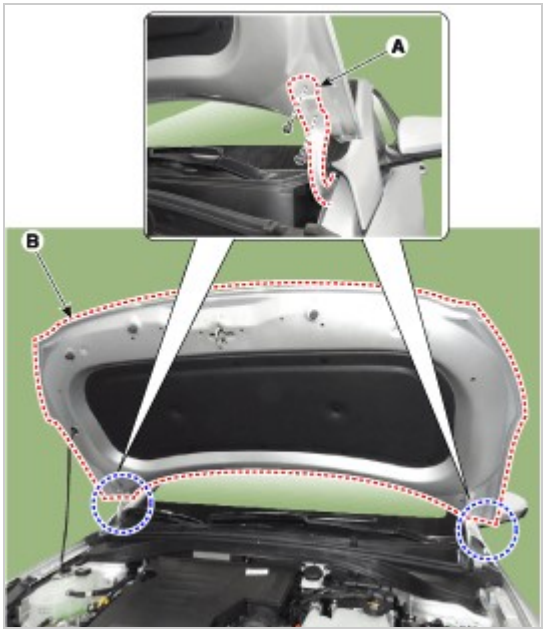

2. To install, reverse the removal procedure.

> **Information**
> - Make sure the hood locks / unlocks and opens / closes properly.
> - Adjust the hood alignment.

Body (Interior and Exterior)

Replacement

1. Using a clip remover, remove the clips and then the hood insulator pad (A).

> **NOTICE**
> - Be careful not to scratch the hood panel.

2. To install, reverse the removal procedure.

> **Information**
> - Replace any damaged clips (or pin-type retainers).

Body (Interior and Exterior)

Replacement

1. Remove the hood weatherstrip (A).

> **NOTICE**
> - Be careful not to scratch the hood weatherstrip.

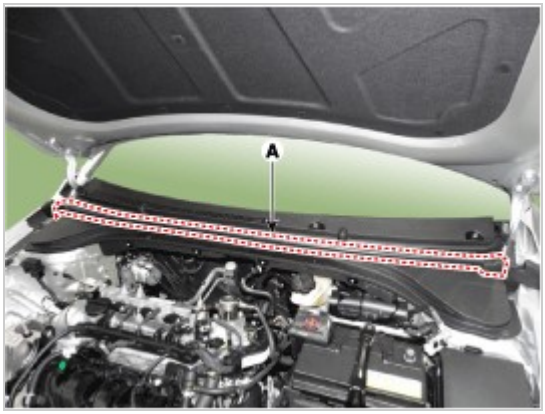

2. To install, reverse the removal procedure.

Body (Interior and Exterior)

Component Location

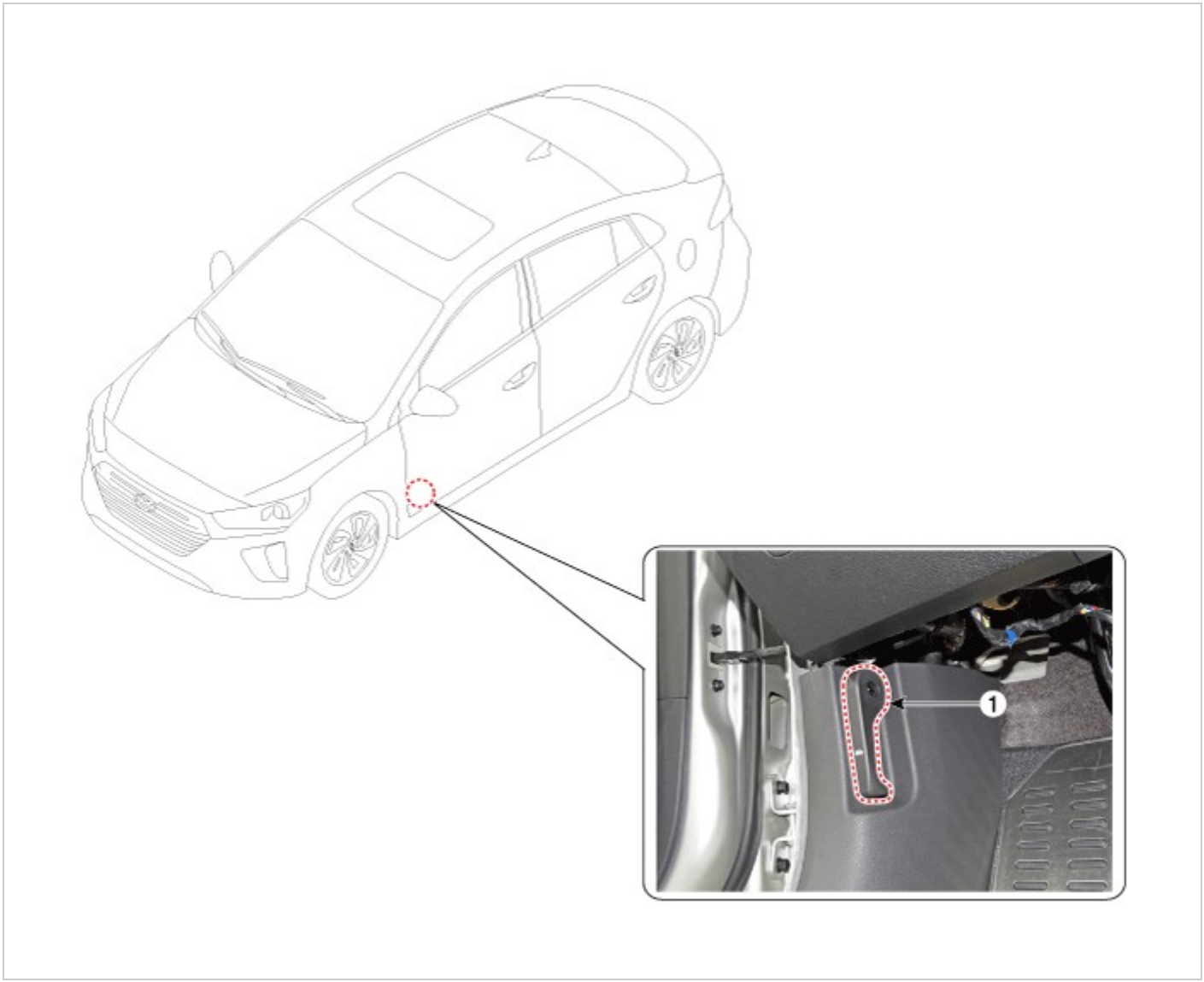

1. Hood latch release handle

Body (Interior and Exterior)

Replacement

1. Using a socket (B), remove the hood release handle (A).

2. To install, reverse the removal procedure.

NOTICE

- Make sure the hood latch cable is connected properly.
- Make sure the hood locks / unlocks and opens / closes properly.

Body (Interior and Exterior)

Component Location

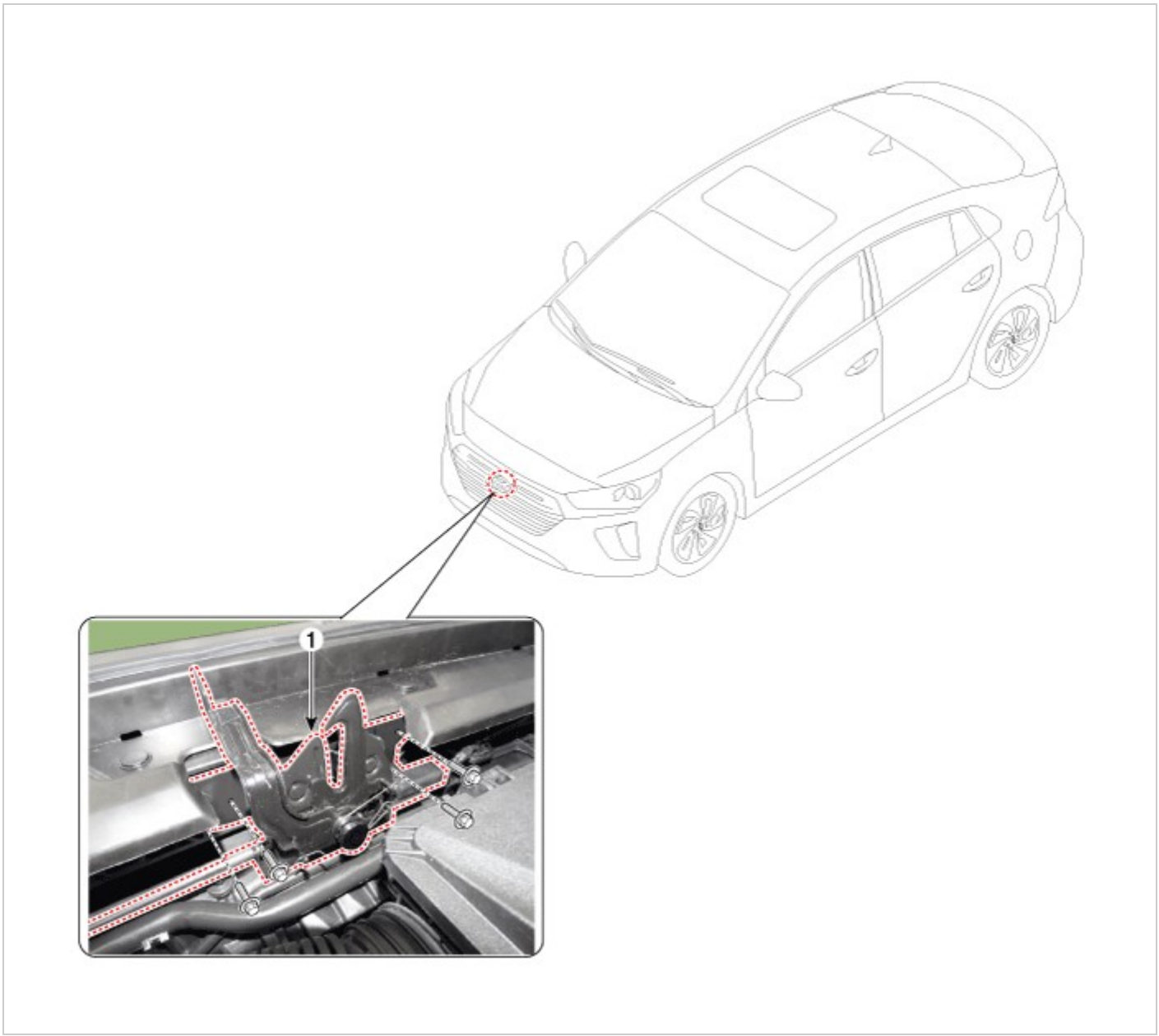

1. Hood latch assembly

Body (Interior and Exterior)

Replacement

1. Disconnect the connector (A), then remove the wiring mounting clips.

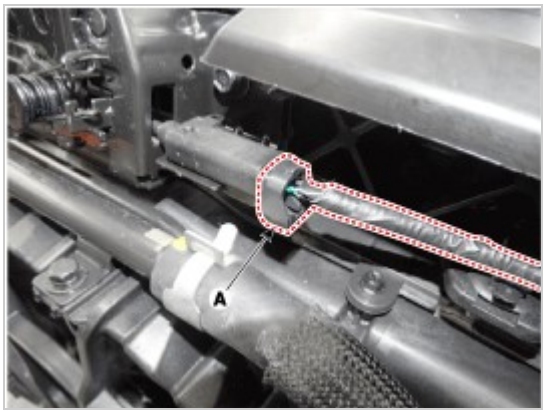

2. Disconnect the hood latch release cable (A).

3. Loosen the mounting bolts and remove the hood latch assembly (A).

Tightening torque :
7.8 - 11.8 N.m (0.8 - 1.2 kgf.m, 5.8 - 8.7 lb-ft)

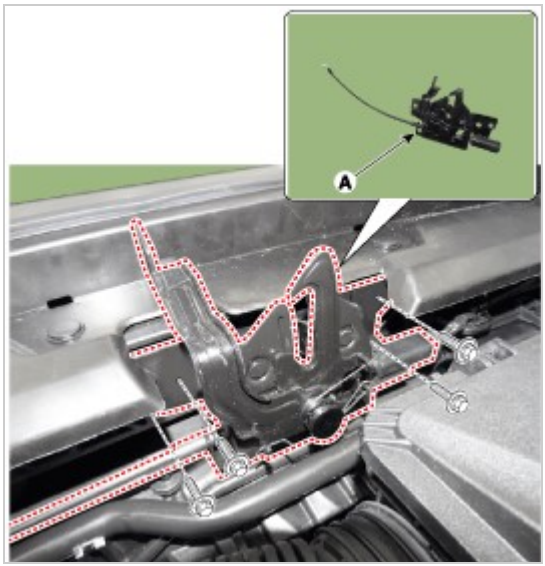

4. To install, reverse the removal procedure.

Information

- Make sure the hood latch release cable is connected properly.
- Make sure the hood locks / unlocks and opens / closes properly.
- Adjust the latch alignment.
- Replace any damaged clips (or retainers or fasteners)

Body (Interior and Exterior)

Adjustment

1. Place the car on a flat surface and check whether the body and trunk lid are well-aligned.
2. After loosening the liftgate hinge (A) mounting bolt, adjust the liftgate by moving it up and down or from side to side.
3. Adjust the gap between the liftgate and body by turning the liftgate overslam bumpers (B).

4. After loosening the liftgate striker (C) mounting bolts, adjust the striker by moving it back and forth or from side to side and then tighten the mounting bolts.
5. Make sure the liftgate opens or closes properly.
6. Make sure the guide bumper (D) overlap each other is good.

Component Location

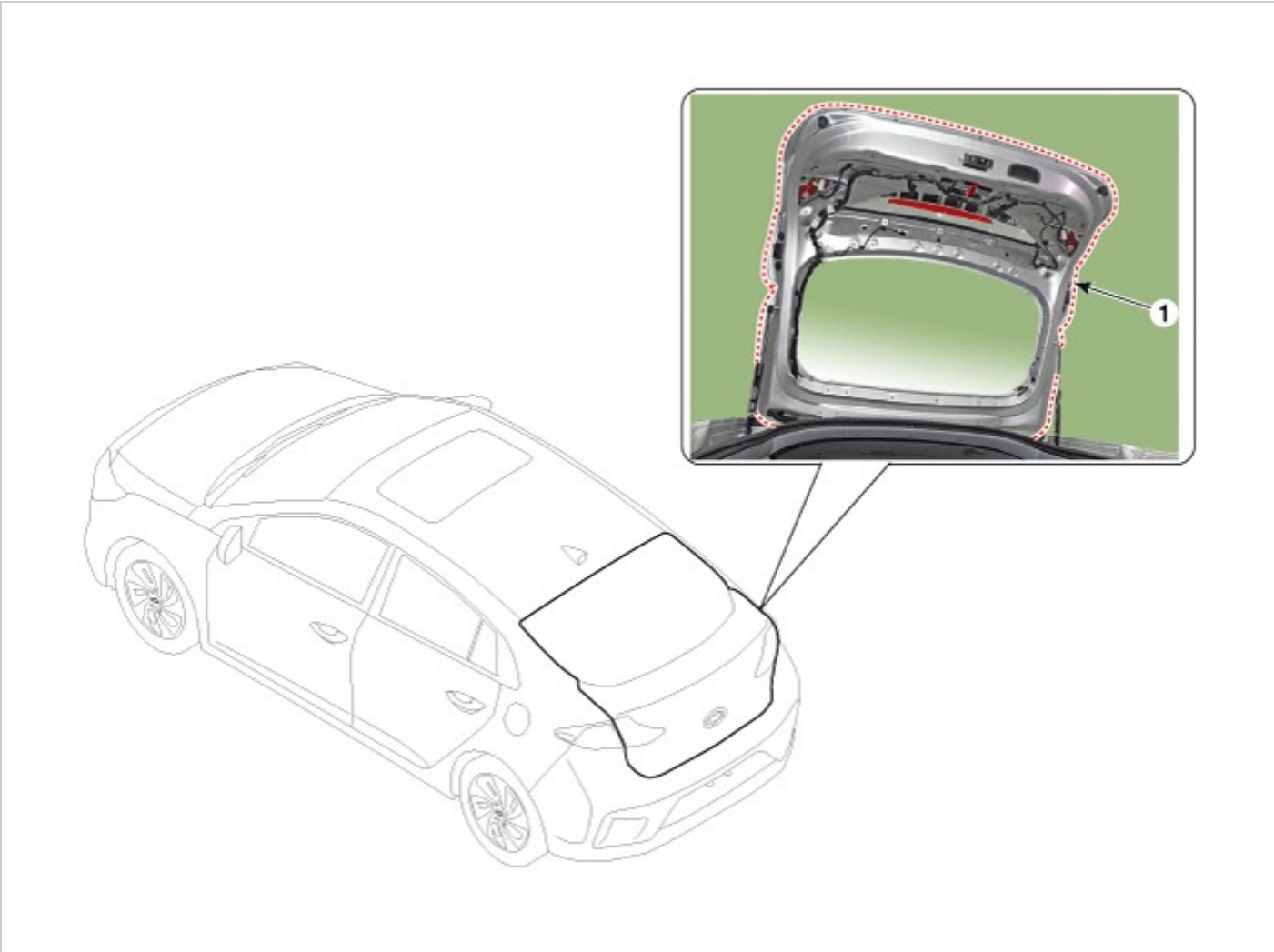

1. Liftgate assembly

Body (Interior and Exterior)

Replacement

CAUTION

- Wear gloves to protect hands from injury.

Information

- When removing and installing the liftgate, an assistant is needed.

1. Remove the liftgate trim.
   (Refer to Liftgate - "Liftgate Trim")
2. Using a screwdriver, lift the socket clips (A) up slightly on both ends of the liftgate lifter (B).

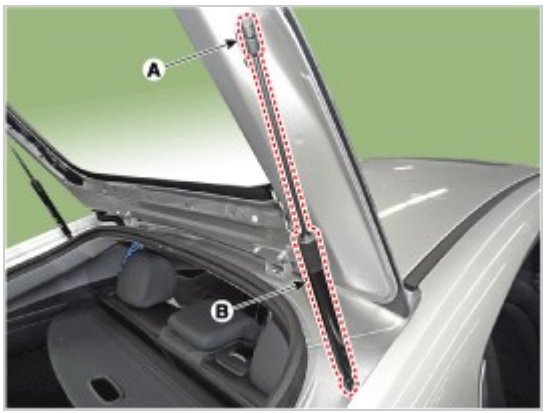

3. Disconnect the connectors and liftgate wiring harness (A).
4. After loosening the mounting bolts, then remove the liftgate assembly (B).

Tightening torque :
21.6 - 26.5 N.m (2.2 - 2.7 kgf.m, 15.9 - 19.5 lb-ft)

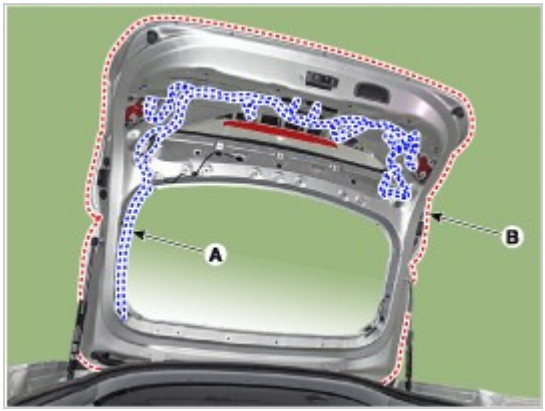

5. To install, reverse the removal procedure.

NOTICE

- Make sure the liftgate locks / unlocks and opens / closes properly.
- Adjust the liftgate alignment.
- Make sure the connectors are connected in properly.
- Replace any damaged clips (or pin-type retainers).

Body (Interior and Exterior)

Component Location

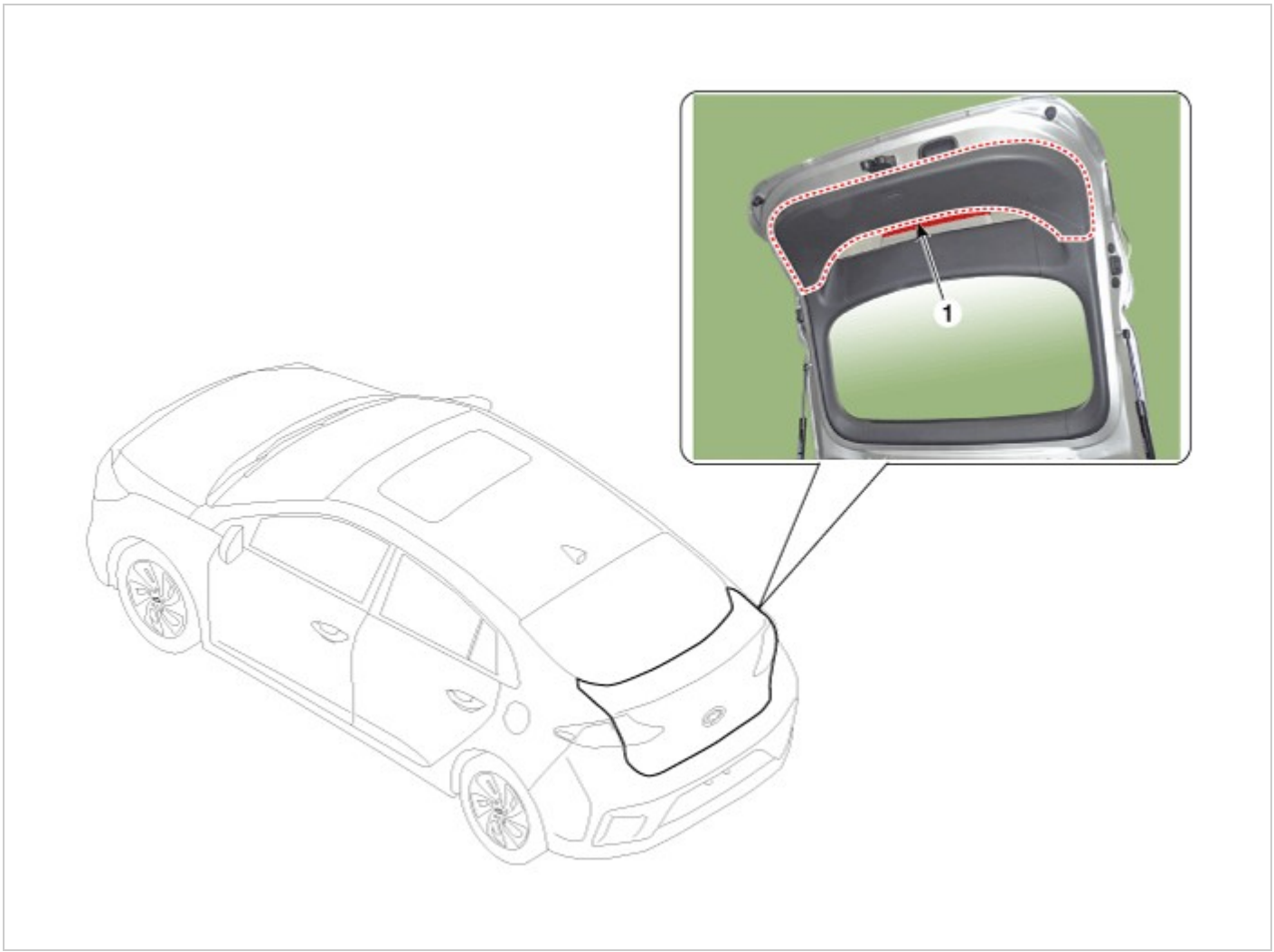

1. Liftgate trim

Body (Interior and Exterior)

Replacement

[Liftgate lower trim]

CAUTION

- Put on gloves to prevent hand injuries.

NOTICE

- When removing with a flat-tip screwdriver or remover, wrap protective tape around the tools to prevent damage to components.
- Take care not to scratch the body surface.

1. Using a screwdriver or remover, remove the liftgate lower trim (A).

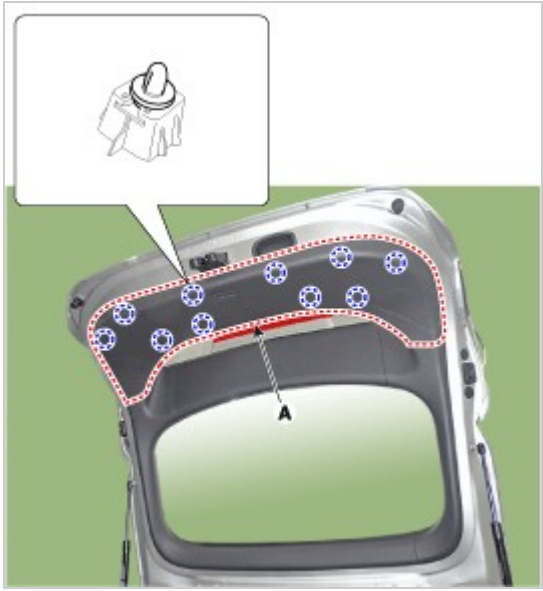

2. To install, reverse the removal procedure.

Information

- Replace any damaged clips.

[Liftgate upper trim]

CAUTION

- Put on gloves to prevent hand injuries.

NOTICE

- When removing with a flat-tip screwdriver or remover, wrap protective tape around the tools to prevent damage to components.
- Take care not to scratch the body surface.

1. Using a screwdriver or remover, remove the liftgate upper trim (A).

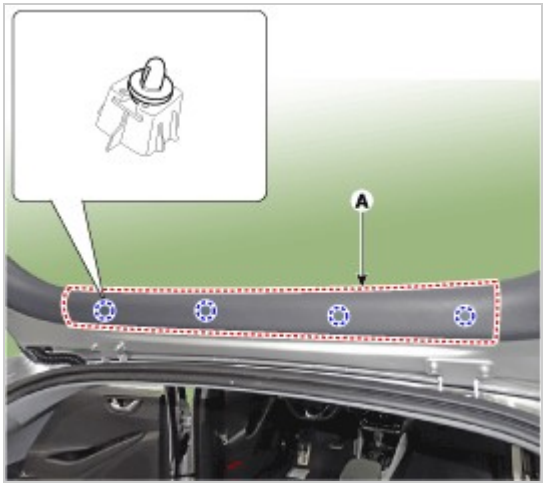

2. To install, reverse the removal procedure.

Information

- Replace any damaged clips (or pin-type retainers).

[Liftgate center trim]

CAUTION

- Put on gloves to prevent hand injuries.

NOTICE

- When removing with a flat-tip screwdriver or remover, wrap protective tape around the tools to prevent damage to components.
- Take care not to scratch the body surface.

1. Using a screwdriver or remover, remove the liftgate center trim (A).

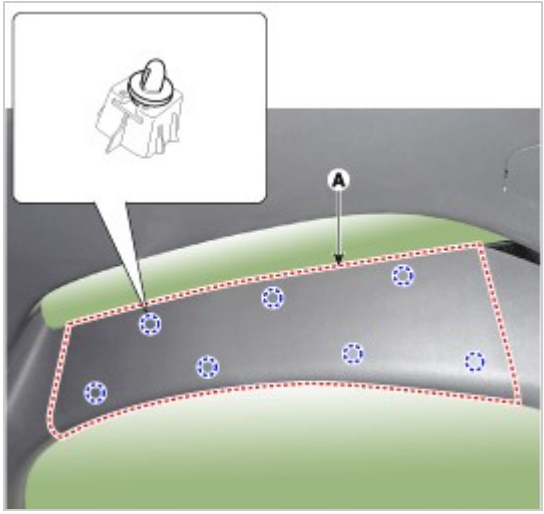

2. To install, reverse the removal procedure.

Information

- Replace any damaged clips.

[Liftgate side trim]

CAUTION

- Put on gloves to prevent hand injuries.

NOTICE

- When removing with a flat-tip screwdriver or remover, wrap protective tape around the tools to prevent damage to components.
- Take care not to scratch the body surface.

1. Remove the liftgate upper trim.
2. Remove the liftgate center trim.
3. After loosening the mounting screw, then remove the liftgate side trim (A).

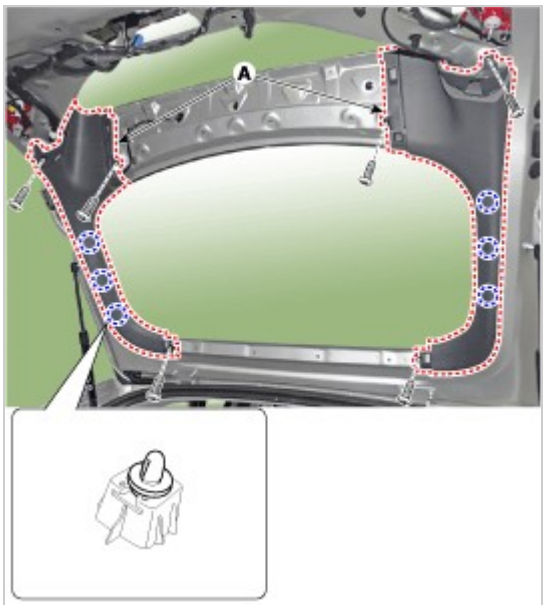

4. To install, reverse the removal procedure.

> **Information**
> - Replace any damaged clips (or pin-type retainers).

Body (Interior and Exterior)

Component Location

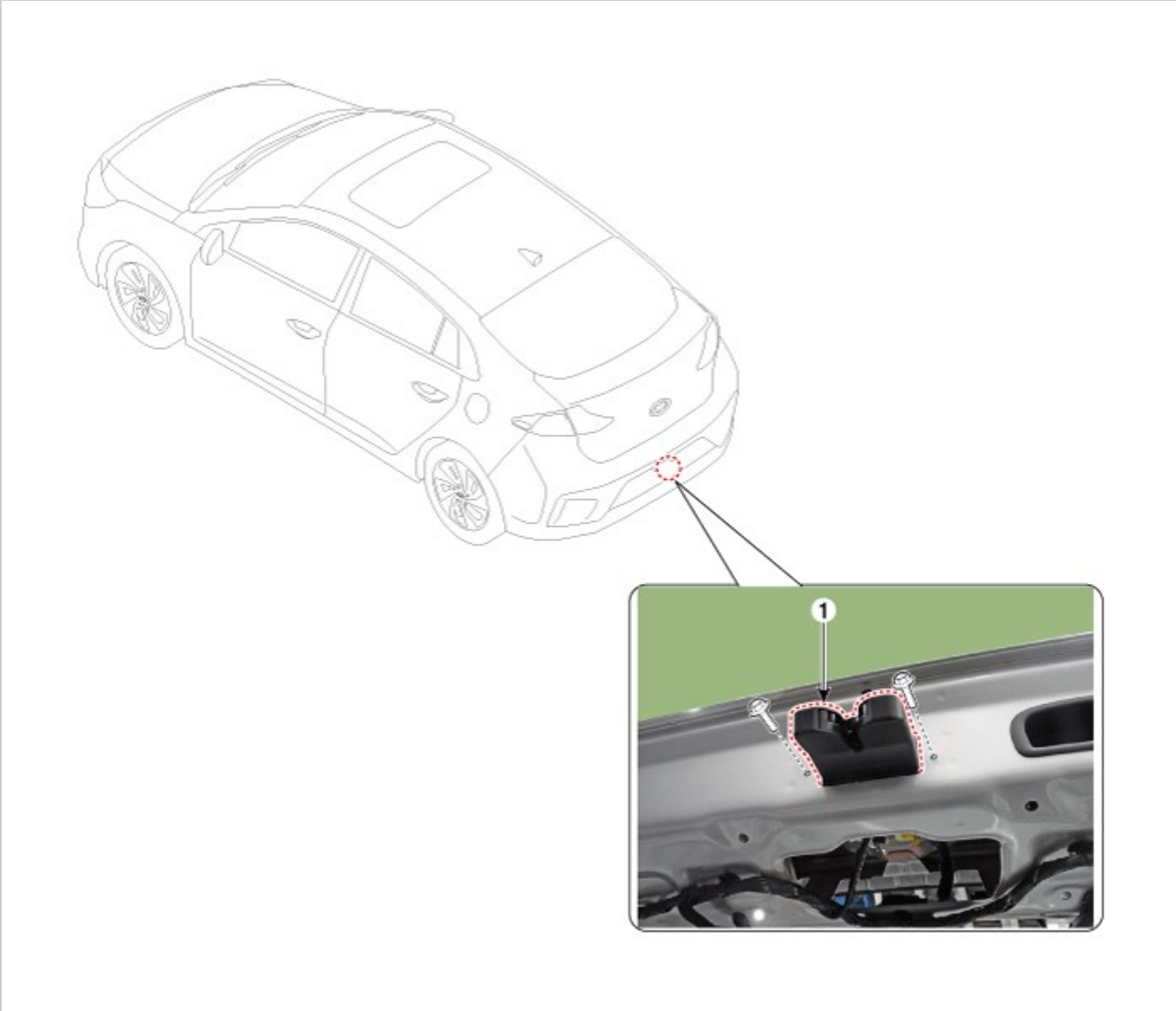

1. Liftgate latch assembly

Body (Interior and Exterior)

Replacement

> **CAUTION**
> - Put on gloves to prevent hand injuries.

> **NOTICE**
> - When removing with a flat-tip screwdriver or remover, wrap protective tape around the tools to prevent damage to components.
> - Take care not to scratch the body surface.

1. Remove the liftgate trim.
   (Refer to Liftgate - "Liftgate Trim")
2. Disconnect the liftgate latch connector (A).

3. After loosening the mounting bolts, then remove the liftgate latch assembly (A).

Tightening torque :
6.9 - 10.8 N.m (0.7 - 1.1 kgf.m, 5.1 - 8.0 lb-ft)

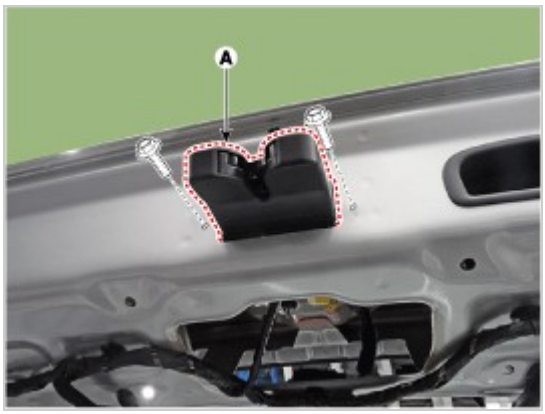

4. To install, reverse the removal procedure.

NOTICE

- Make sure the liftgate locks / unlocks and opens / closes properly.
- Adjust the liftgate alignment.
- Make sure the connectors are connected in properly.

Replacement

Information

- Take care to not let the liftgate fall on you as the lifts are removed. Have a helper hold the liftgate open, or use a secure method to hold it open.

1. Using a screwdriver, lift up slightly the socket clips (A) of both ends on the lifter (B), and then remove the lifter from the bracket.

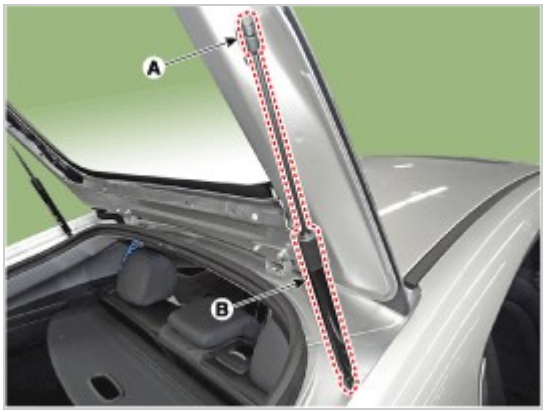

2. Push the socket of the lifter into the bracket for installation.

Information

- Make sure the liftgate locks and opens properly and locks securely.

Replacement

1. Remove the liftgate weatherstrip (A).

> **NOTICE**
> - Do not apply sealant to the body.

2. To install, reverse the removal procedure.

> **Information**
> - When installing the liftgate weatherstrip, check the center-marking line (B).

Body (Interior and Exterior)

Component Location

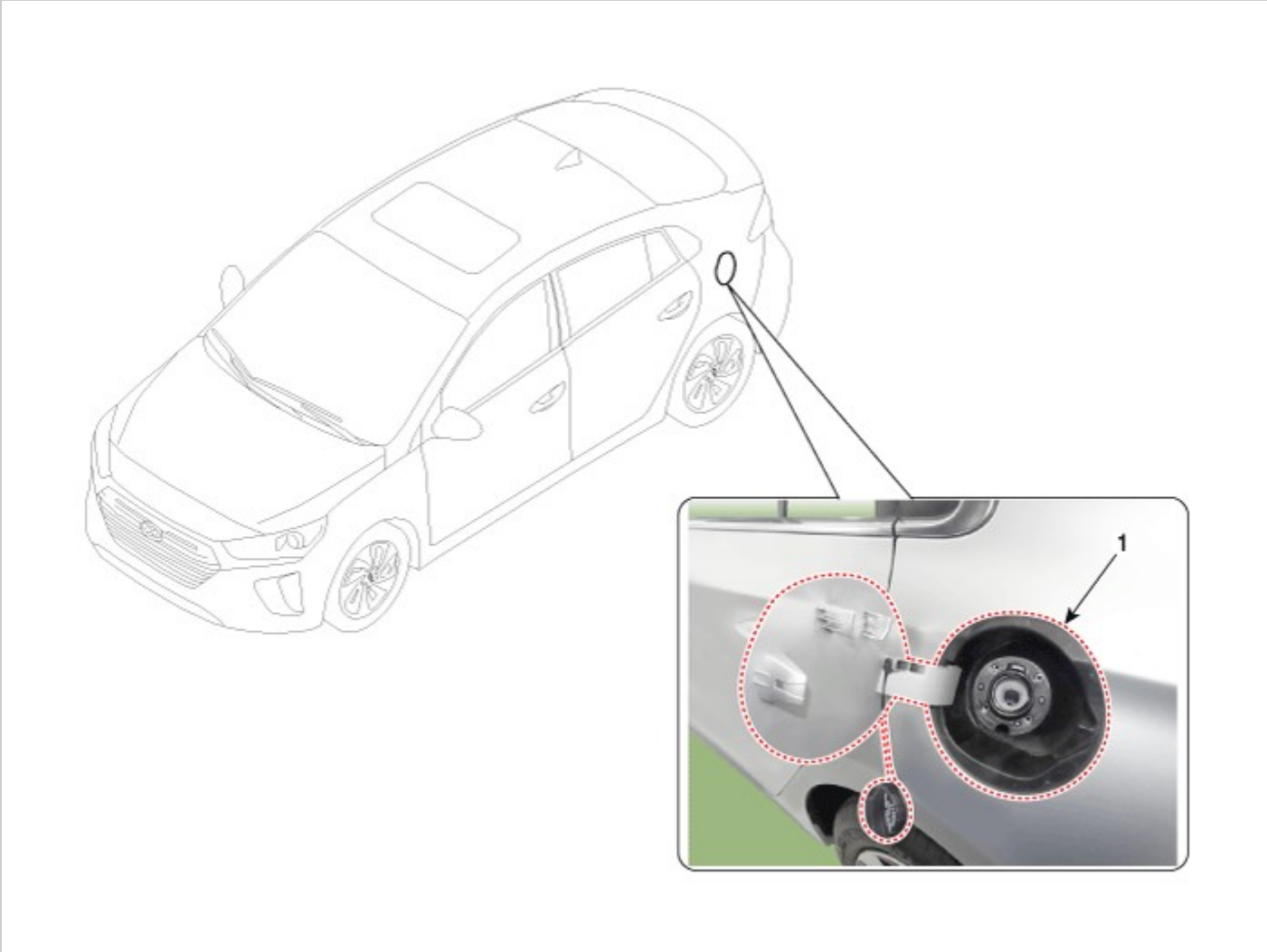

1. Fuel filler door

Body (Interior and Exterior)

Replacement

CAUTION

- Put on gloves to prevent hand injuries.

NOTICE

- When removing with a flat-tip screwdriver or remover, wrap protective tape around the tools to prevent damage to components.

1. Open the fuel filler door (A).

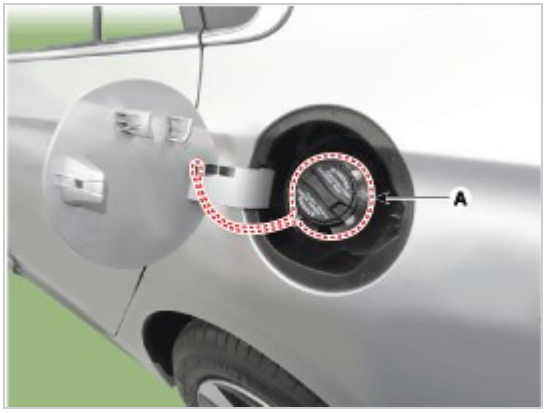

2. Remove the fuel filler door pushpin (A) by turning it in a counterclockwise direction.

3. After loosening the mounting clips, remove the fuel filler door housing (A).

Information

- When removing, pull out the packing part from inside not to damage the fuel filler door packing part.

4. Using a screwdriver or remover, remove the fuel filler door (A).

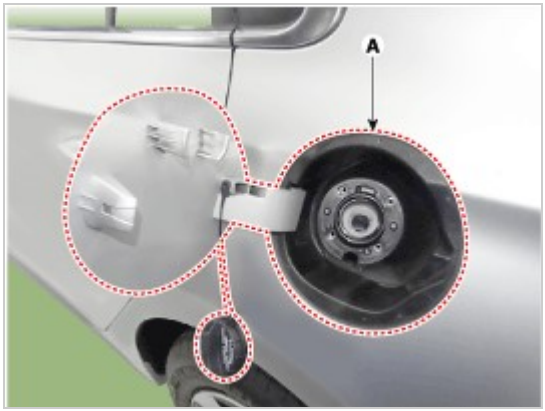

5. To install, reverse the removal procedure.

> **Information**
> - Make sure the fuel filler door locks / unlocks and opens / closes properly.

Body (Interior and Exterior)

Components

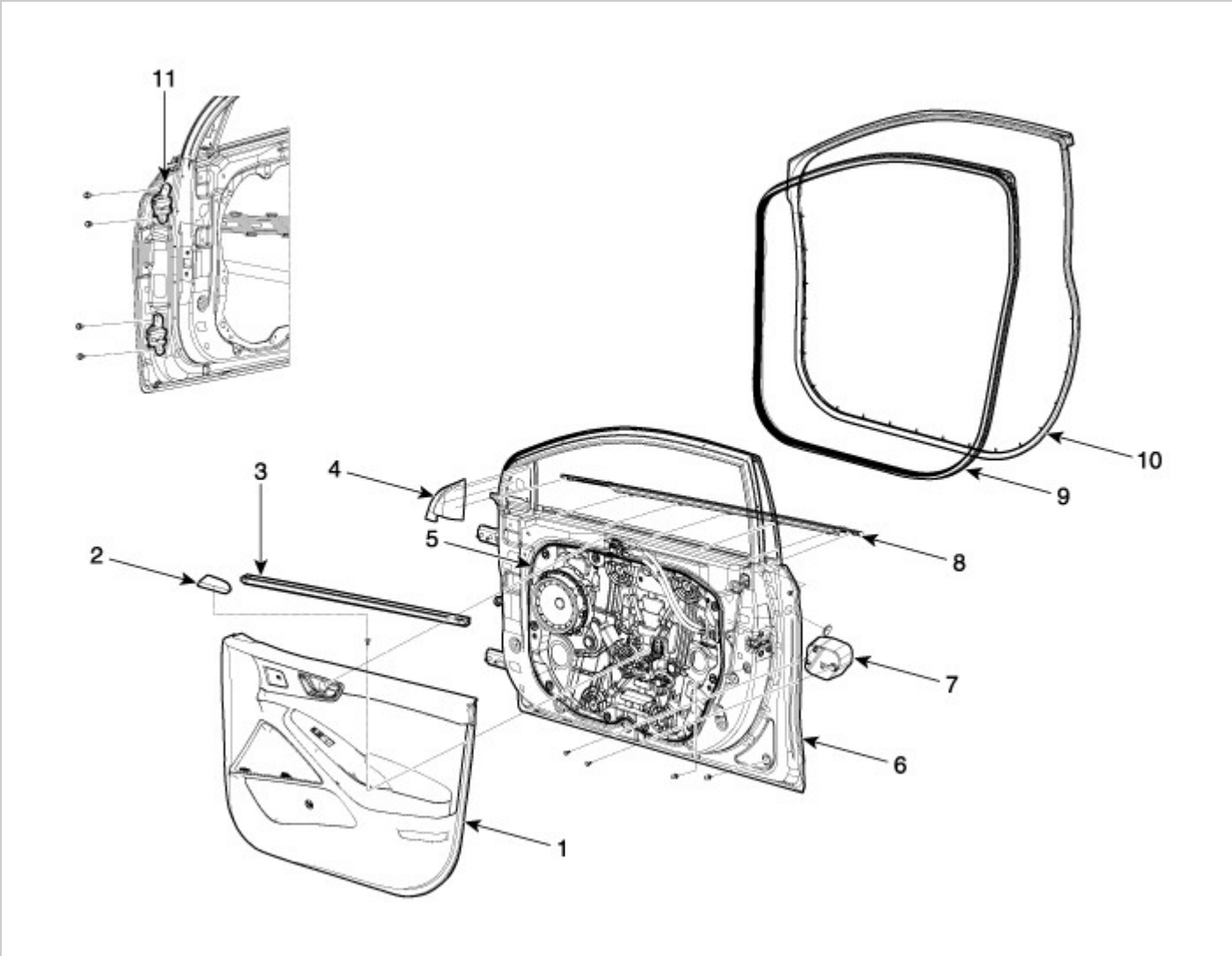

1. Front door trim
2. Front door pull cap
3. Front door belt inside weatherstrip
4. Front door quadrant inner cover
5. Front door module
6. Front door panel
7. Front door side impact pad
8. Front door belt outside weatherstrip
9. Front door body side weatherstrip
10. Front door side weatherstrip
11. Front door hinge

Body (Interior and Exterior)

Adjustment

Glass Adjustment

Information

- Check the glass run channel for damage or deterioration, and replace it if necessary.

1. Remove the front door trim.
   (Refer to Front Door - "Front Door Trim")
2. Separate the mounting plug hole (A) from the front door module.

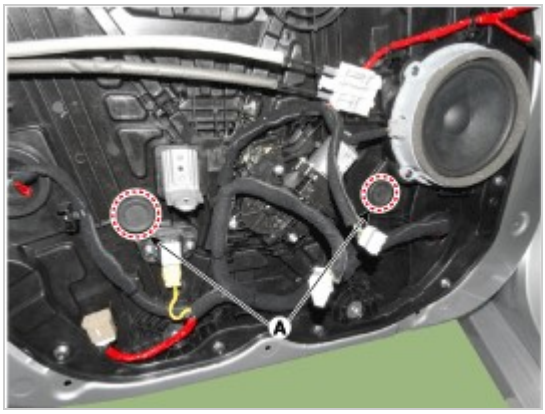

3. After loosening the glass mounting bolts, adjust the spacing of the glass (A) by moving the glass from side to side and then tighten the bolts.

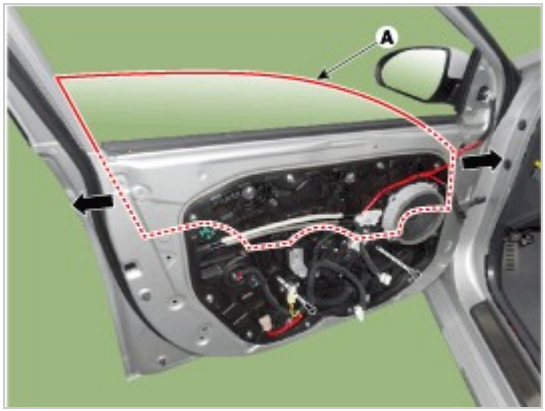

4. Check the glass for normal operation.

Door Striker Adjustment

Information

- Make sure the door latches securely without slamming it. If necessary adjust the striker (A): The striker nuts are fixed. The striker can be fine adjusted up or down, and in or out.

1. After loosening the mounting screw, adjust the striker (A) by moving it forward and backward or from side to side and then tighten the bolts (B).

   Tightening torque :
   (B) : 18.6 - 28.4 N.m (1.9 - 2.9 kgf.m, 13.7 - 21.0 lb-ft)

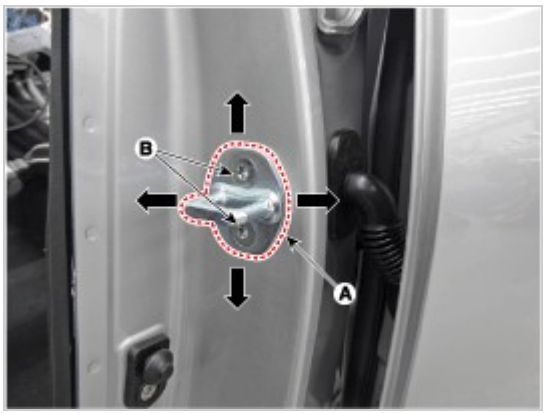

2. Tap on the striker with a plastic hammer to adjust the striker. The striker will not move much, but will give some adjustment.
3. Hold the outer handle out, and push the door against the body to be sure the striker allows a flush fit. If the door latches properly, tighten the screws and recheck.

Door Position Adjustment

Information

- After installing the door, check that the body fits flush with/parallel to all the edges of front door. Check that the door and body edges are parallel. Before adjusting, replace the mounting bolts.

1. Check that the door and body edges are parallel.

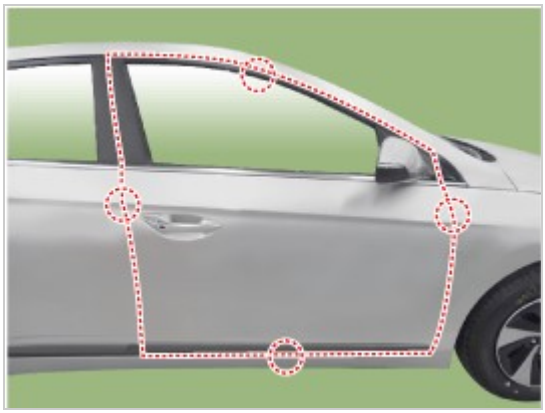

2. Place the vehicle on a level surface before adjusting the doors.
3. Adjust the hinges (A) :
   - Loosen the door mounting bolts slightly, and move the door in or out until it flush with the body.
   - Loosen the hinge mounting bolts slightly, and move the door backward or forward, up or down as necessary.
   - Place a shop towel on the jack to prevent damage to the door when adjusting the door.

Tightening torque :
(B) : 21.6 - 26.5 N.m (2.2 - 2.7 kgf.m, 15.9 - 19.5 lb-ft)
(C) : 37.3 - 41.2 N.m (3.8 - 4.2 kgf.m, 27.5 - 30.4 lb-ft)

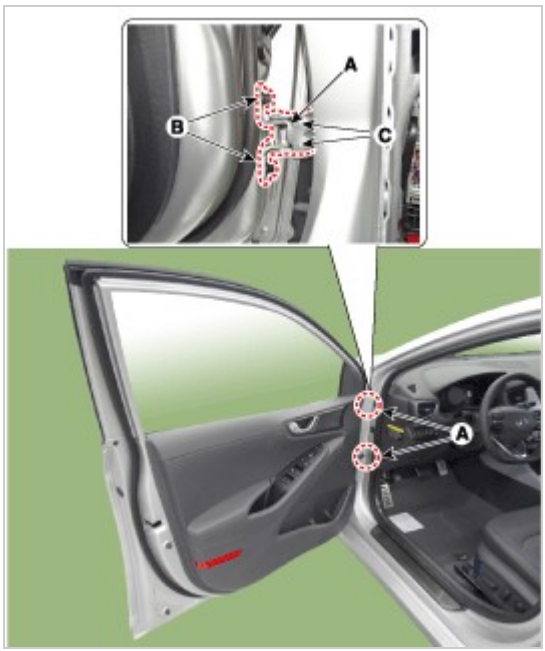

4. Grease the pivot portions of the hinges indicated.
5. Check for water leaks.

Body (Interior and Exterior)

Component Location

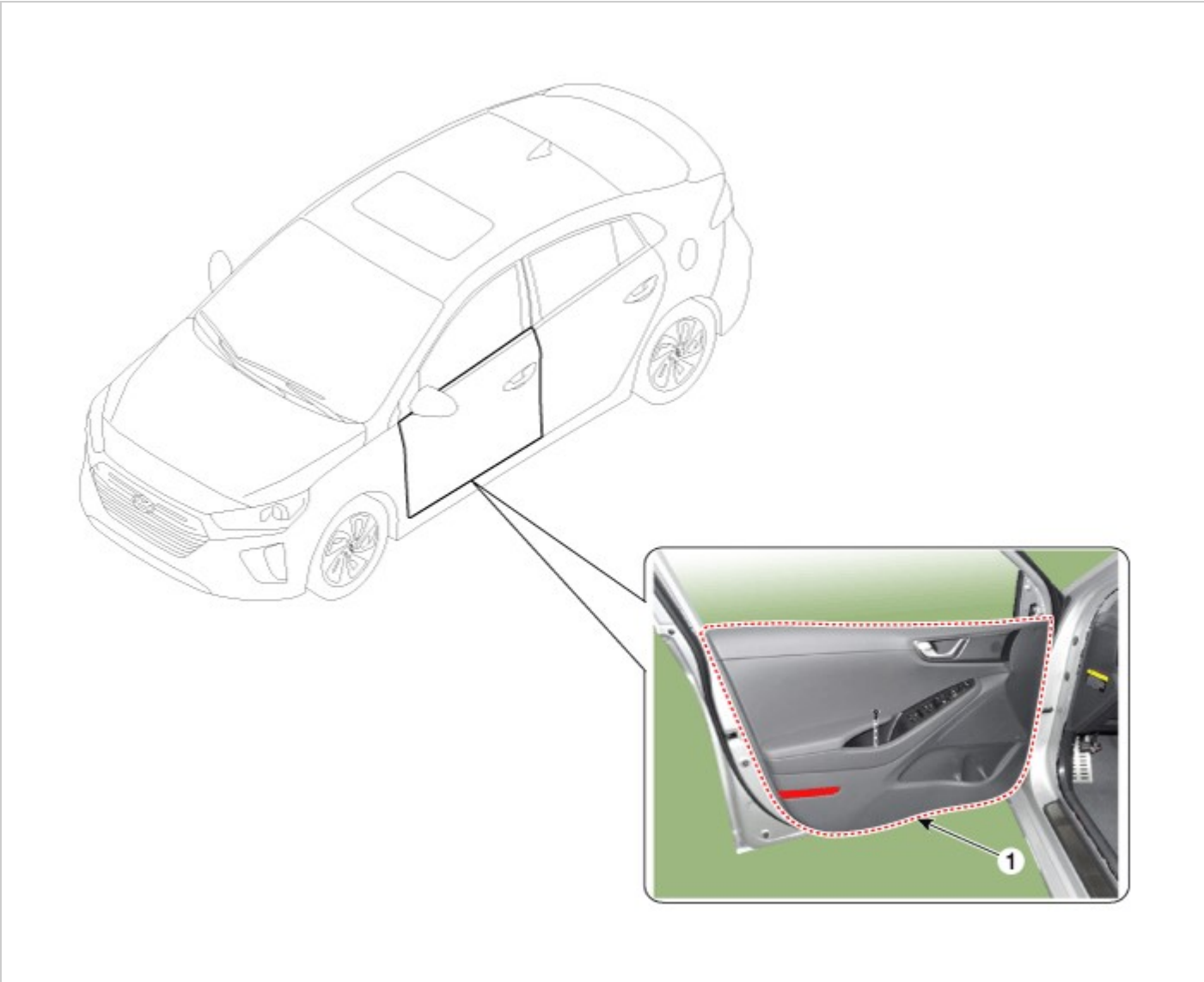

1. Front door trim

Replacement

CAUTION

- Put on gloves to prevent hand injuries.

NOTICE

- When removing with a flat-tip screwdriver or remover, wrap protective tape around the tools to prevent damage to components.
- Be careful not to scratch the door trim and other parts.

1. Using a screwdriver or remover, remove the front door quadrant inner cover (A).

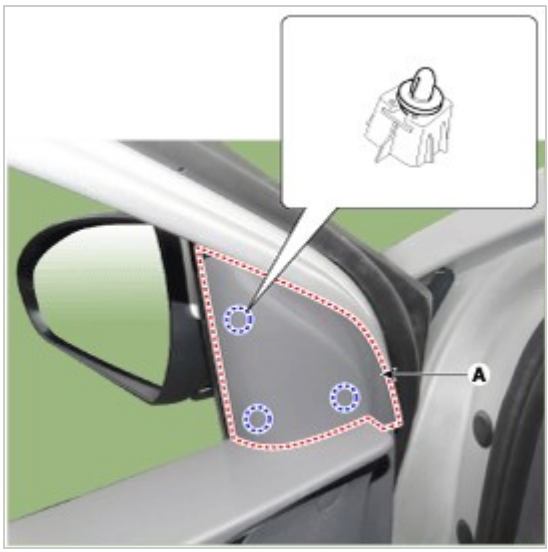

2. After loosening the mounting screws, remove the lower part of the front door trim (A) using a flat-tip screwdriver.

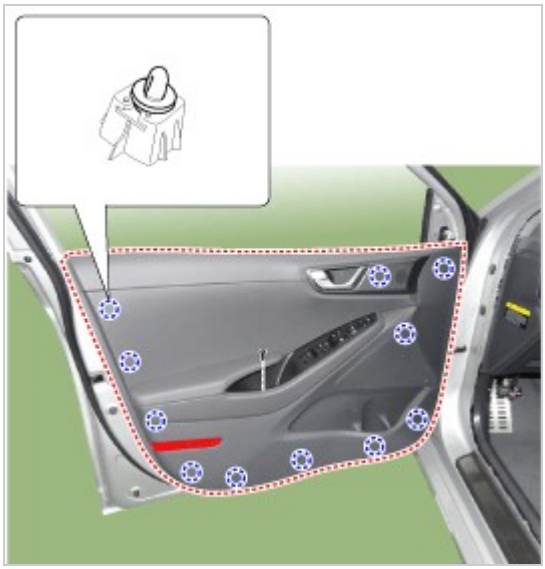

3. Remove the front door inside handle cage (A).

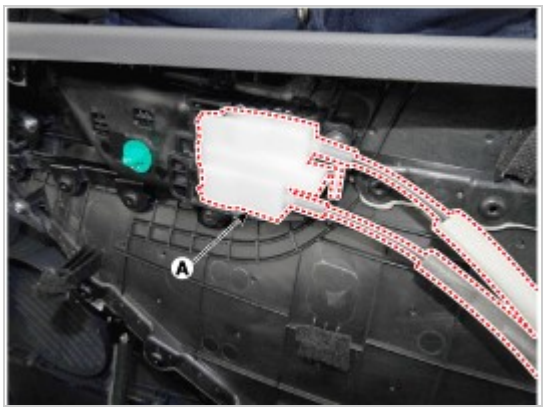

4. Disconnect the front door lamp connector (A) and power window switch connector (B).

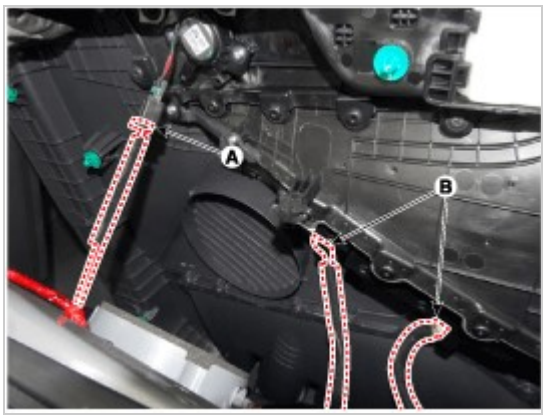

5. To install, reverse the removal procedure.

Information

- Make sure the connector is connected properly.
- Make sure the door locks / unlocks and opens / closes properly.
- Replace any damaged clips (or pin-type retainers).
- Make sure the glass is operated properly.

Replacement

1. Remove the front door trim.
   (Refer to Front Door - "Front Door Trim")
2. After loosening the mounting screws, remove the front door inside handle (A).

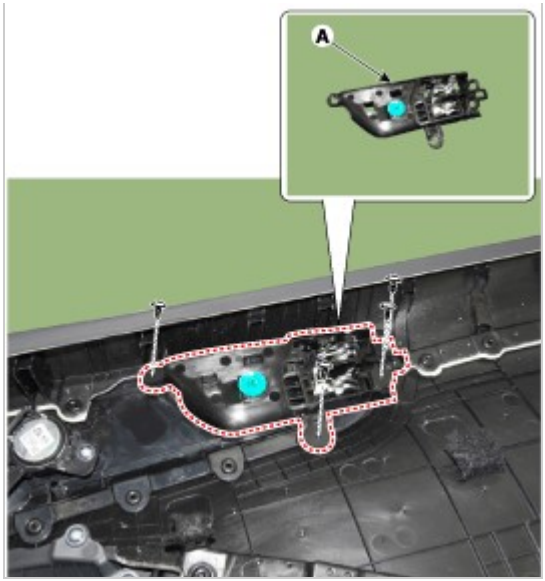

3. To install, reverse the removal procedure.

NOTICE

- Make sure the door locks / unlocks and opens / closes properly.
- Replace any damaged clips (or pin-type retainers).

Component Location

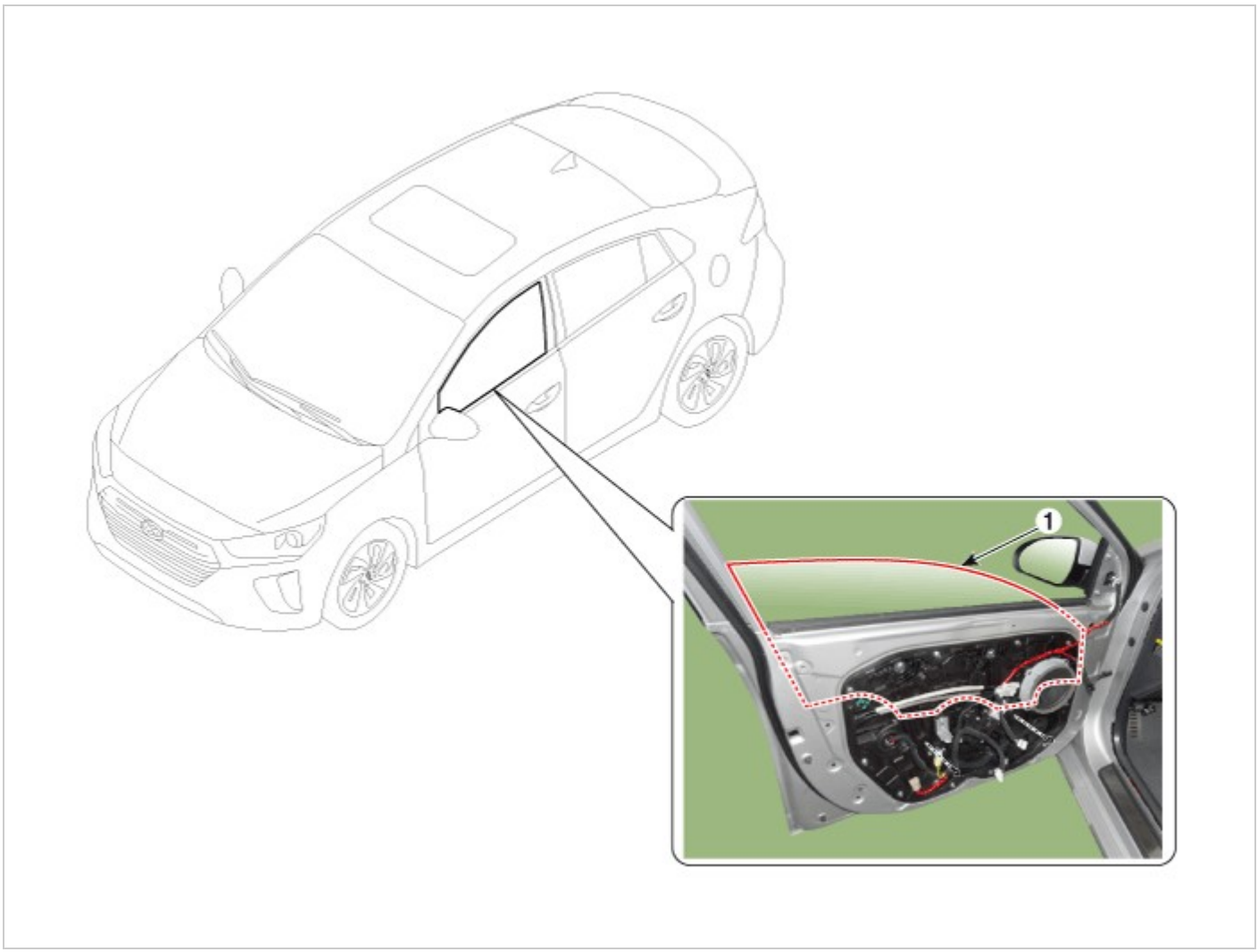

1. Front door window glass

Replacement

1. Remove the front door trim.
   (Refer to Front Door - "Front Door Trim")
2. Remove the front door belt inside weatherstrip (A).

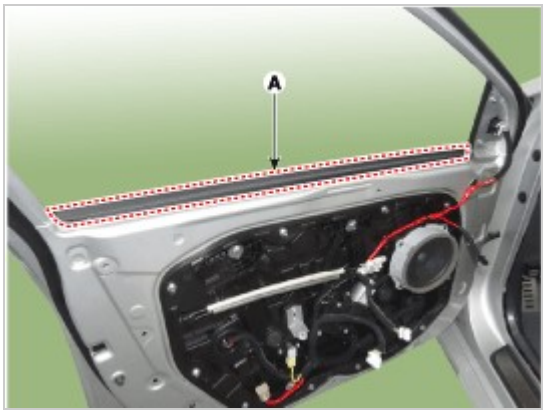

3. Separate the mounting plug hole (A) from the front door module.

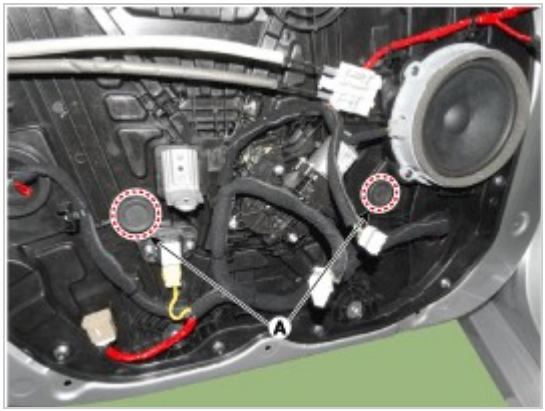

4. Lower the glass by operating the power window switch until the glass mounting bolt is exposed in the plug hole.

CAUTION

- Be careful not to drop the glass and/or scratch the glass surface.

Information

- Use the door switch to align the mounting hole/bolt with the hole in the door.
- If unable to operate the window motor, remove the motor and align the hole by hand.

5. After loosening the glass mounting bolts, adjust the spacing of the glass (A) by moving the glass from side to side and then tighten the bolts.

Tightening torque :
8.8 - 11.8 N.m (0.9 - 1.2 kgf.m, 6.5 - 8.7 lb-ft)

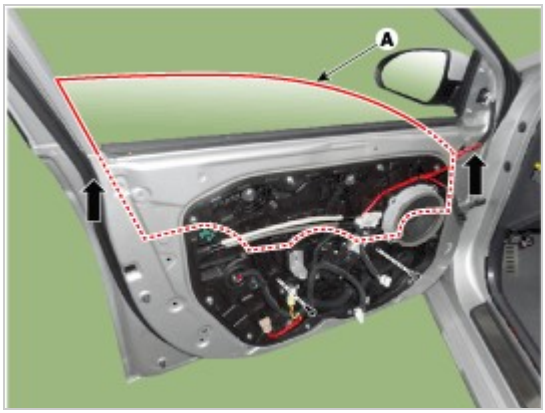

6. To install, reverse the removal procedure.

Information

- Roll the glass up and down to see if it moves freely.
- Adjust glass position as needed.
- Make sure the door lock and opens properly.
- Check the glass run channel for damage and replace the damaged channel.

Body (Interior and Exterior)

Component Location

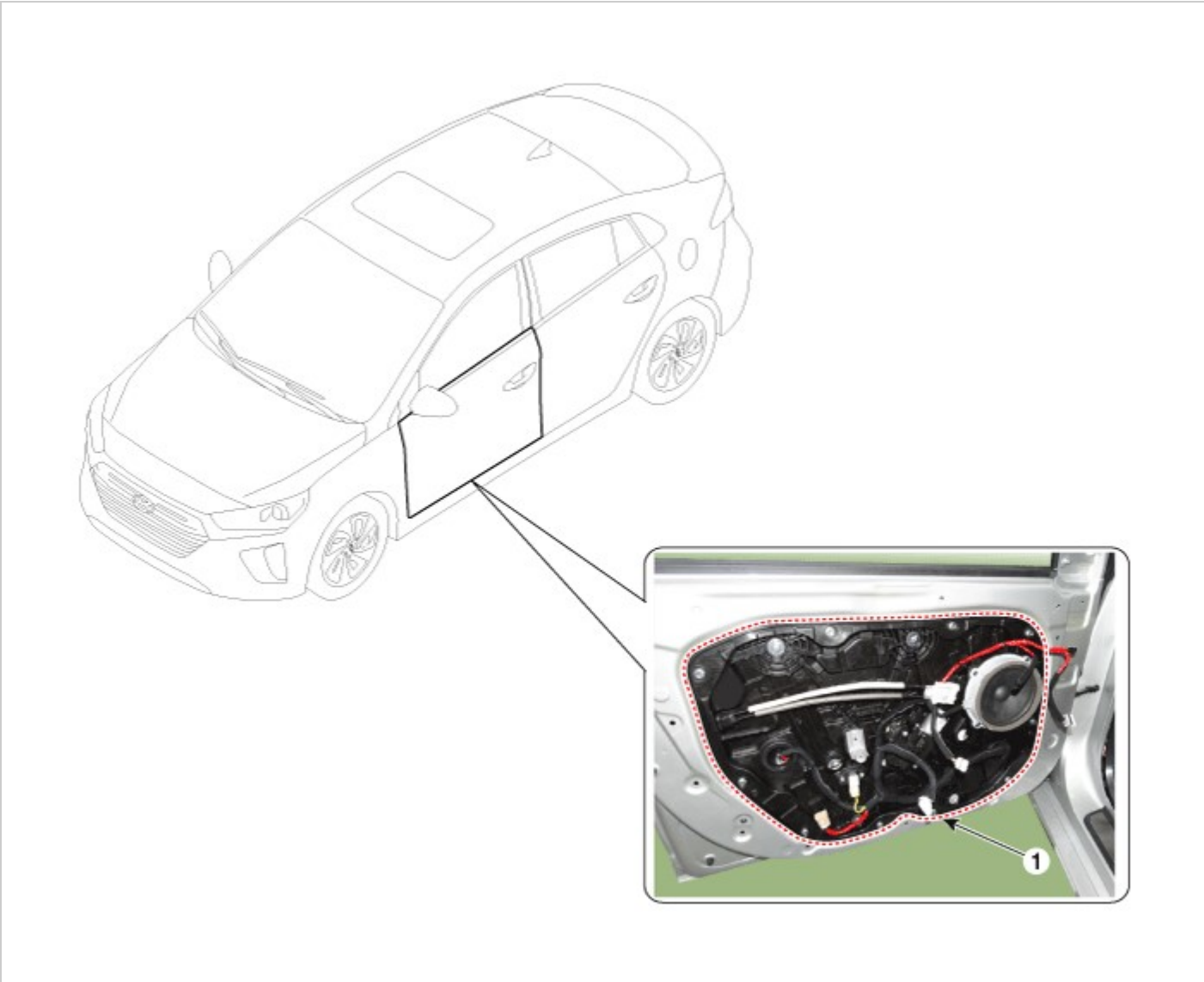

1. Front door module

Replacement

1. Remove the front door window glass.
   (Refer to Front Door - "Front Door Window Glass")
2. Remove the front door outside handle.
   (Refer to Front Door - "Front Door Outside Module")
3. Loosen the front door outside handle base mounting bolt (A).

   Tightening torque :
   2.0 - 2.9 N.m (0.2 - 0.3 kgf.m, 1.4 - 2.2 lb-ft)

4. Disconnect the front door main connector (A) and outside rear view mirror connector (B).

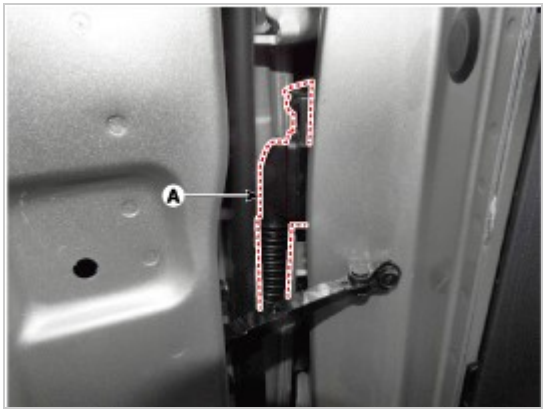

5. Loosen the front door latch mounting screws.

Tightening torque :
7.8 - 14.7 N.m (0.8 - 1.5 kgf.m, 5.8 - 10.8 lb-ft)

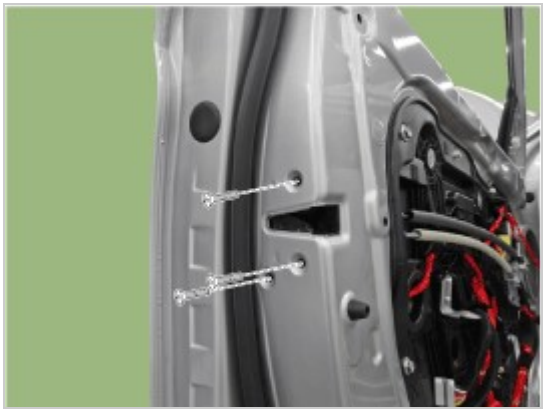

6. Loosen the mounting bolts and remove the front door module (A).

Tightening torque :
8.8 - 13.7 N.m (0.9 - 1.4 kgf.m, 8.5 - 10.1 lb-ft)

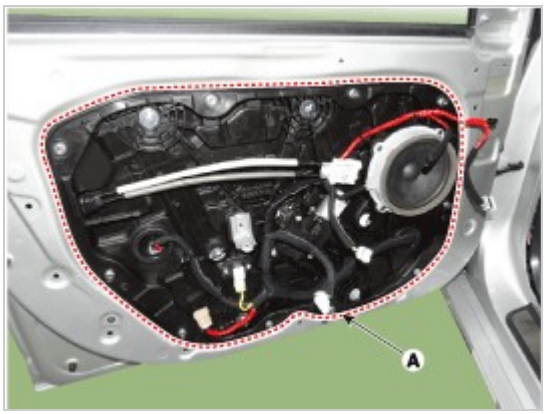

7. Disconnect the connectors and front door module wiring harness (A).

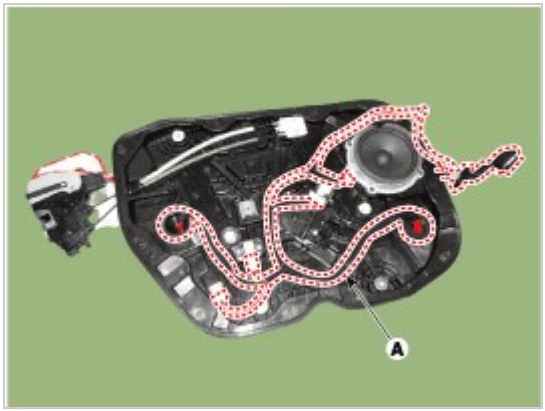

8. Remove the front door latch assembly.
   (Refer to Front Door - "Front Door Latch")
9. Reomove the front speaker.
   (Refer to Body Electrical System - "Speakers")
10. Remove the front power window motor.
    (Refer to Body Electrical System - "Power Window Motor")
11. Remove the side impact sensor.
    (Refer to Restraint - "Side Impact Sensor (SIS)")
12. To install, reverse the removal procedure.

Information

- Make sure connectors are connected properly and each rod is connected securely.
- Make sure the door locks / unlocks and opens / closes properly.

Component Location

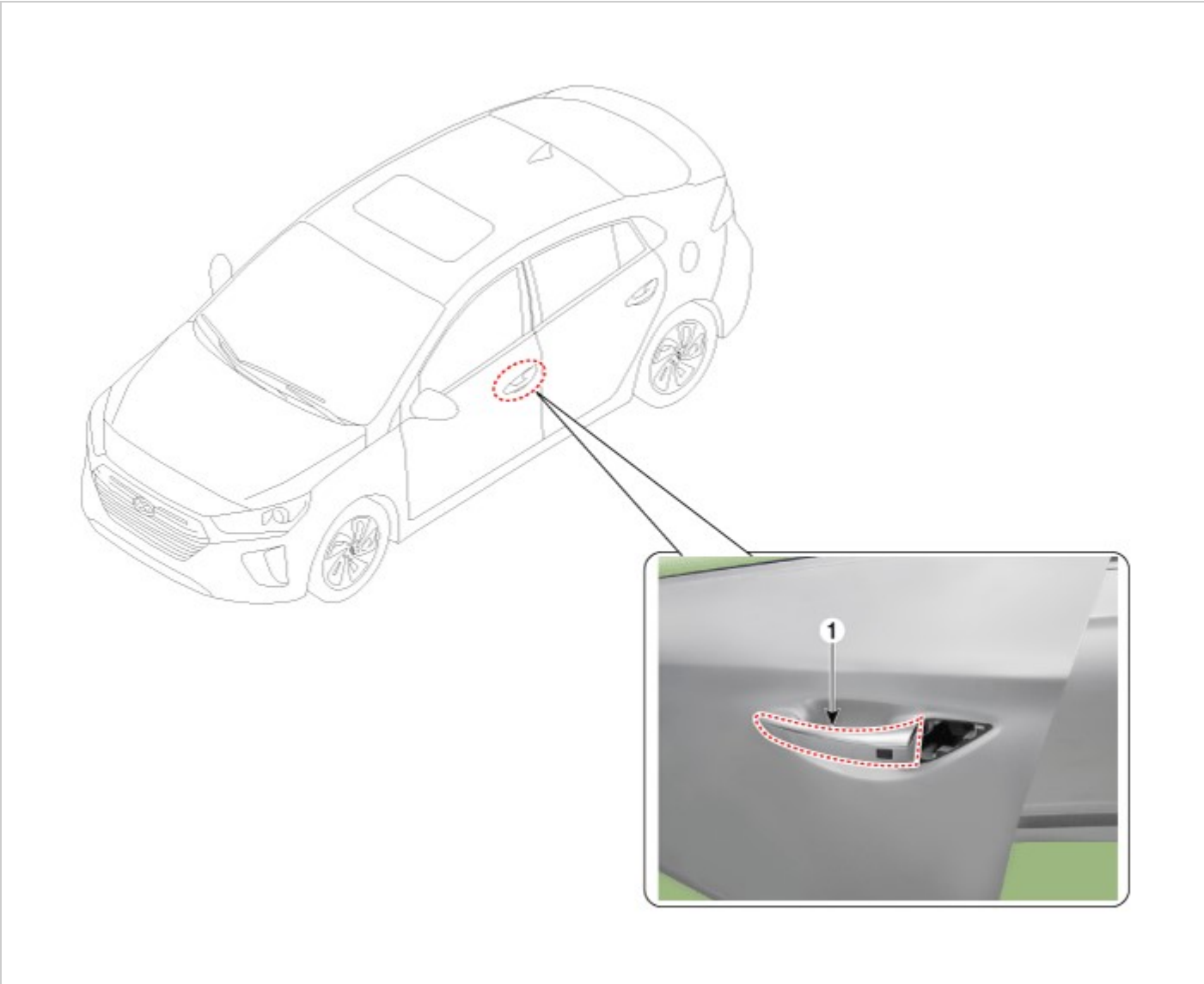

1. Front door outside handle

Replacement

1. Remove the plug hole (B).
2. After loosening the mounting bolt, remove the front door lock assembly (A).

   Tightening torque :
   7.8 - 10.8 N.m (0.8 - 1.1 kgf.m, 5.8 - 8.0 lb-ft)

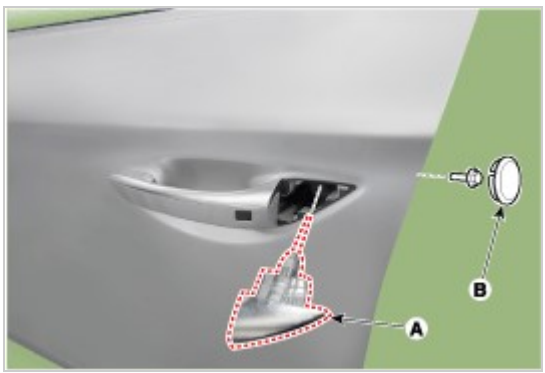

3. Remove the front door outside handle (A) by sliding it forward.

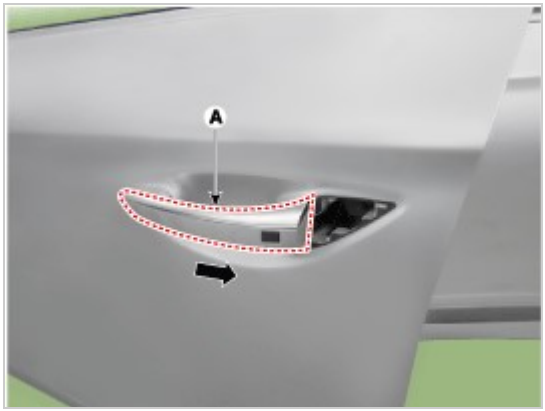

4. Disconnect the front door outside handle connector (A) by pushing the locking pin.

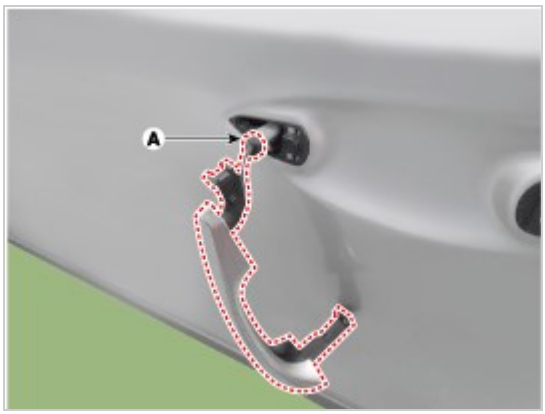

5. To install, reverse the removal procedure.

Information

- Make sure the connector is connected properly.
- Make sure the door locks / unlocks and opens / closes properly.
- Be sure to install the outside handle pad (A) between the outside handle and the door panel.

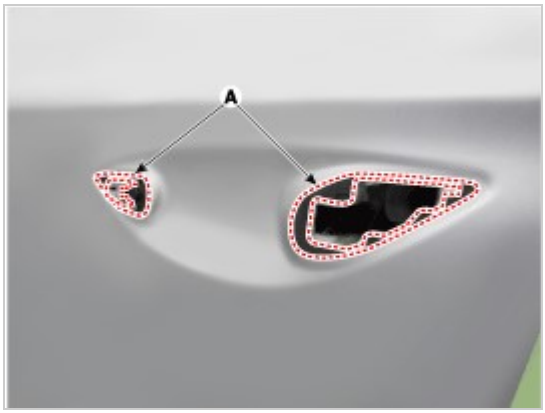

Replacement

1. Pull down the front door window glass to the lowest level by pressing the power window glass switch.
2. After loosening the mounting screws, remove the front door belt outside weatherstrip (A).

Tightening torque :
1.0 - 2.0 N.m (0.1 - 0.2 kgf.m, 0.7 - 1.4 lb-ft)

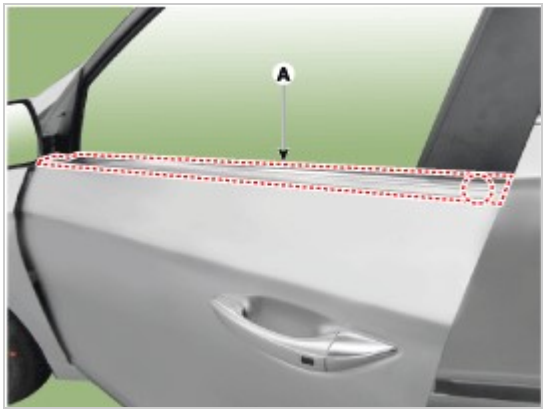

3. To install, reverse the removal procedure.

> **Information**
> - Replace any damaged clips (or pin-type retainers).

Body (Interior and Exterior)

Replacement

1. Remove the front door trim.
   (Refer to Front Door - "Front Door Trim")
2. Remove the front door belt inside weatherstrip (A).

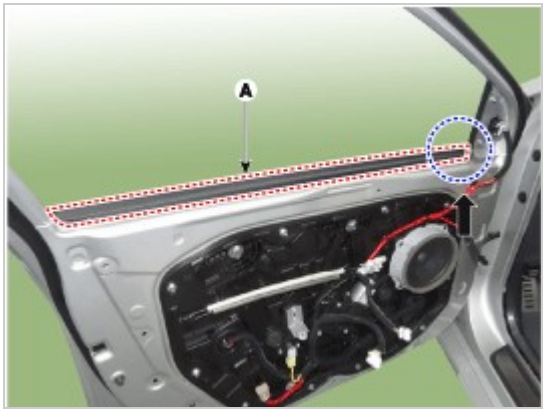

3. To install, reverse the removal procedure.

> **Information**
> - When installing, install it by first contacting the inside part (basis point of assembly) of arrow to door frame.
> - Replace any damaged clips (or pin-type retainers).

Body (Interior and Exterior)

Replacement

[Front door side weatherstrip]

1. Loosen the front door checker (B) mounting bolt.

   Tightening torque :
   18.6 - 28.4 N.m (1.7 - 2.2 kgf.m,13.7 - 21.0 lb-ft)

2. Detach the clips, then remove the front door side weatherstrip (A).

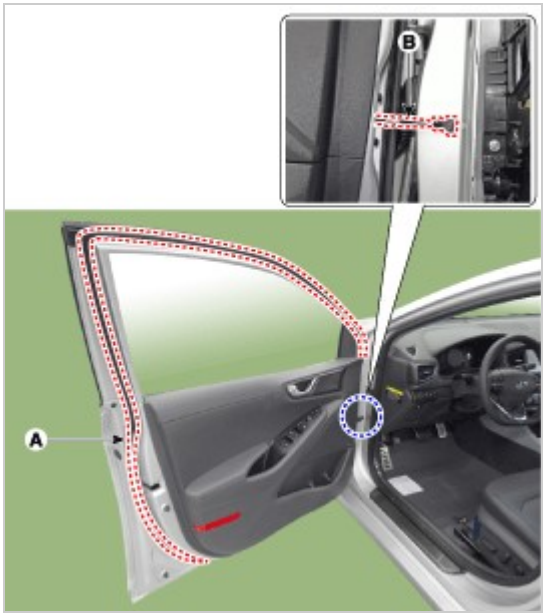

3. To install, reverse the removal procedure.

> **Information**
> • Replace any damaged clips (or pin-type retainers).

[Front door body side weatherstrip]

1. Detach the clips, then remove the front door body side weatherstrip (A).

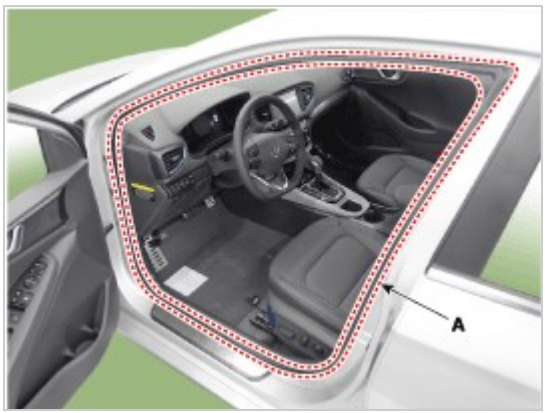

2. To install, reverse the removal procedure.

> **Information**
> • Replace any damaged clips (or pin-type retainers).

Body (Interior and Exterior)

Component Location

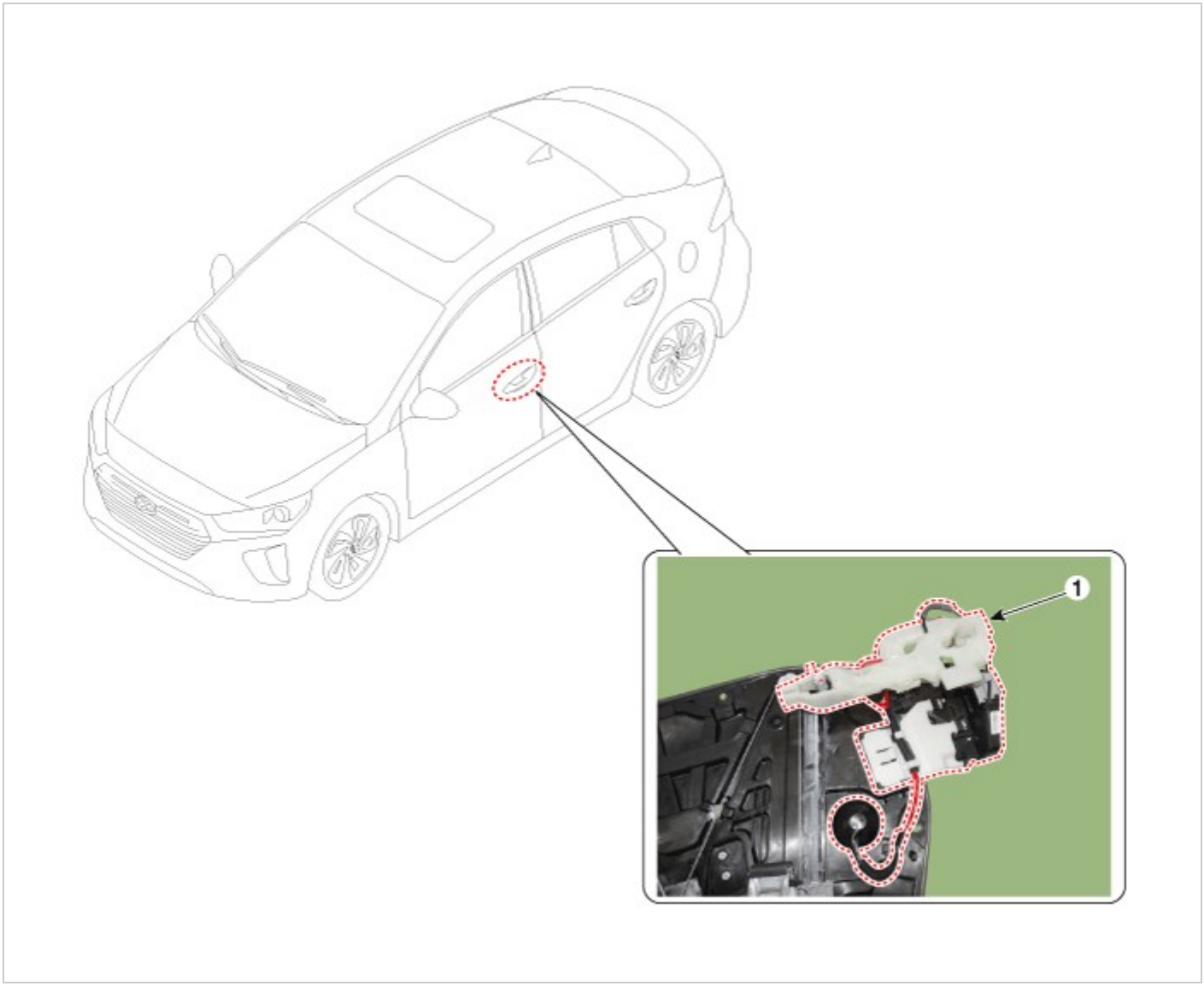

1. Front door latch

Body (Interior and Exterior)

Replacement

1. Remove the front door module.
   (Refer to Front Door - "Front Door Module")
2. Remove the front door inside handle cage (A).

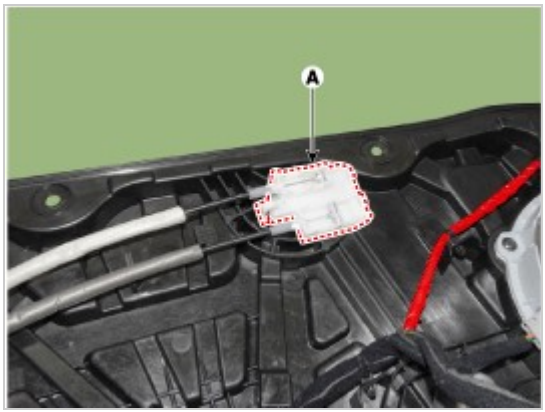

3. Remove the front door latch assembly (A) by pulling it in the direction of the arrow.

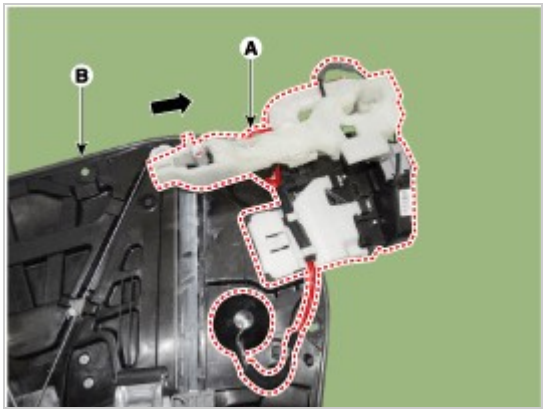

4. Disconnect the front door latch connector (A).

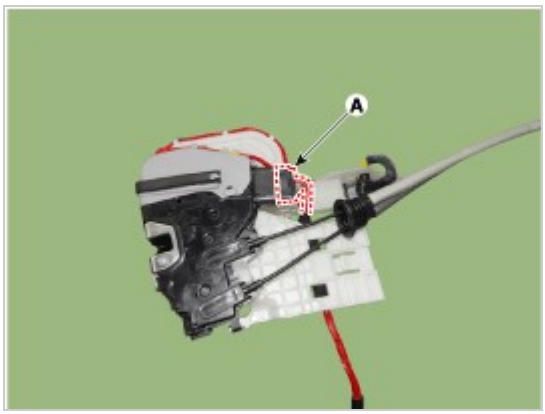

5. To remove the front door outside handle base connector (A), widen both sides of the wiring fastener and then push back the front door outside handle base connector.

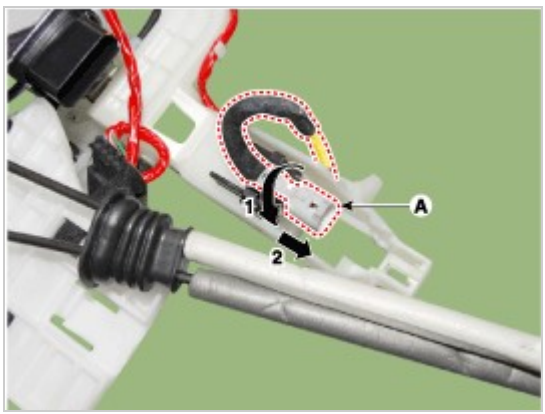

6. Remove the front door outside handle connector wiring harness (A).

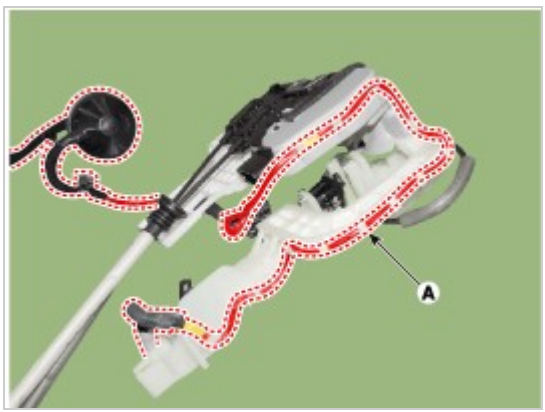

7. Remove the front door outside handle base (A) by pushing in the lock pins located in the back.

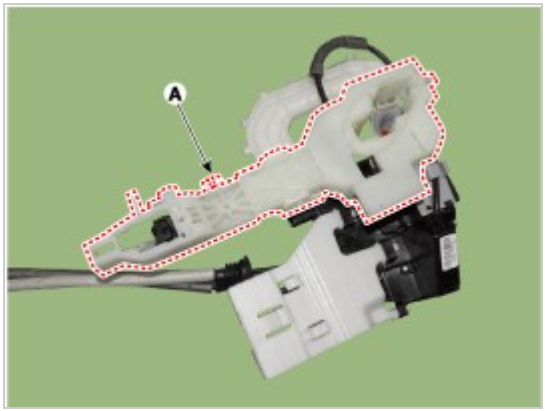

8. Remove the front door outside handle cable (A).

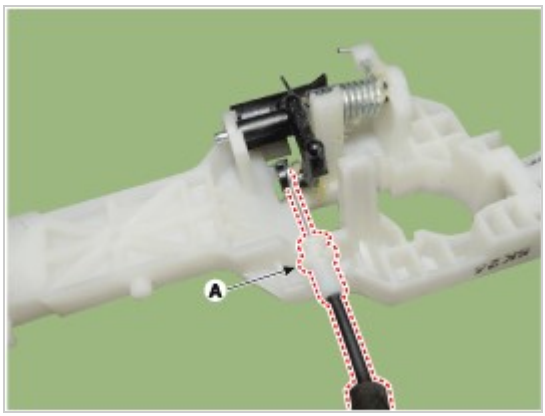

9. To install, reverse the removal procedure.

Information

- Make sure the connector is connected properly.
- Make sure the door locks / unlocks and opens / closes properly.
- Replace any damaged clips (or pin-type retainers).

Components

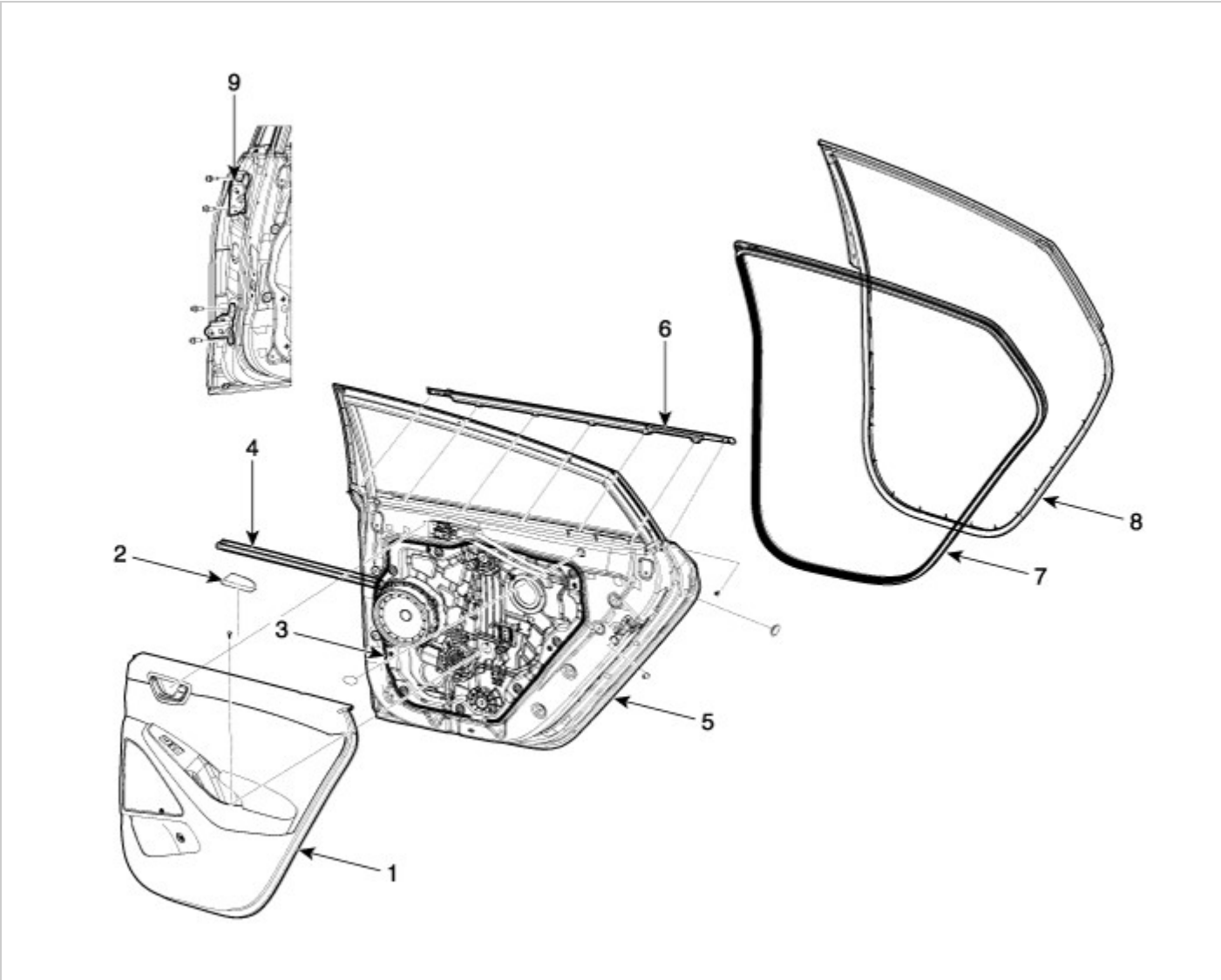

1. Rear door trim
2. Rear door pull cap
3. Rear door module
4. Rear door belt inside weatherstrip
5. Rear door panel
6. Rear door belt outside weatherstrip
7. Rear door body side weatherstrip
8. Rear door side weatherstrip assembly
9. Rear door hinge

Adjustment

Glass Adjustment

Information

- Check the glass run channel for damage or deterioration, and replace them if necessary.

1. Remove the rear door trim.
   (Refer to Rear Door - "Rear Door Trim")
2. Separate the mounting plug hole (A) from the rear door module.

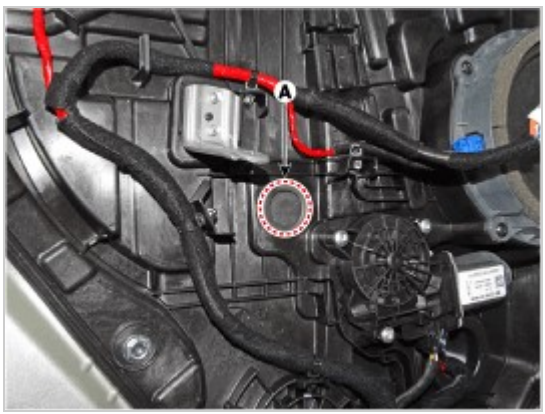

3. After loosening the glass mounting bolts, adjust the spacing of the glass (A) by moving the glass from side to side and then tighten the bolts.

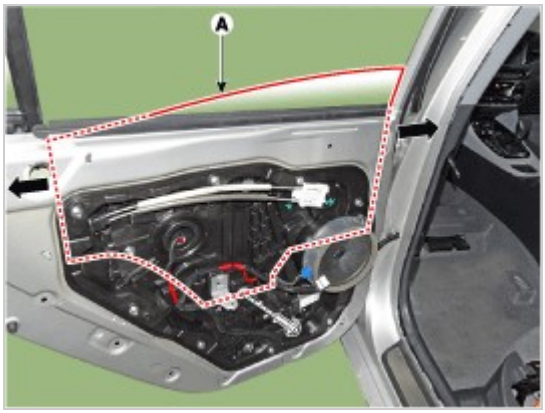

4. Check the glass for normal operation.

Door Striker Adjustment

Information

- Make sure the door latches securely without slamming it. If necessary adjust the striker (A): The striker nuts are fixed. The striker can be fine adjusted up or down, and in or out.

1. After loosening the mounting screw, adjust the striker (A) by moving it forward and backward or from side to side and then tighten the bolts (B).

Tightening torque :

(B) : 18.6 - 21.6 N.m (1.9 - 2.9 kgf.m, 13.7 - 21.0 lb-ft)

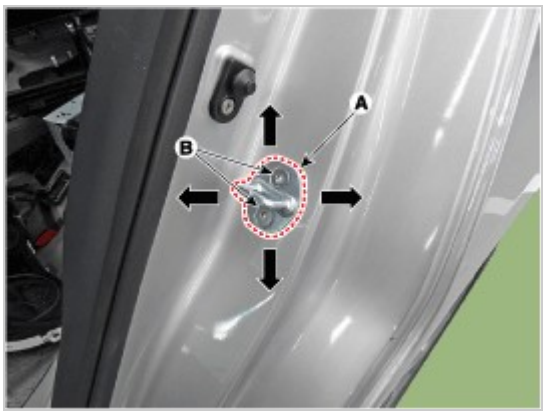

2. Tap on the striker with a plastic hammer to adjust the striker. The striker will not move much, but will give some adjustment.
3. Hold the outer handle out, and push the door against the body to make sure that the striker fits flush with the body. If the door latches properly, tighten the screws and recheck.

Door Position Adjustment

Information

- After installing the rear door, check that the body fits flush with/parallel to all the edges of front door. Check that the door and body edges are parallel. Before adjusting, replace the mounting bolts.

1. Check that the door and body edges are parallel.

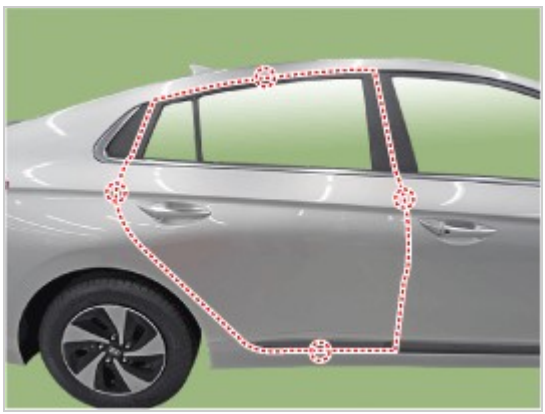

2. Place the vehicle on a firm, level surface when adjusting the doors.
3. Adjust the hinges (A) :

- Loosen the door mounting bolts slightly, and move the door in or out until it aligns flush with the body.
- Loosen the hinge mounting bolts slightly, and move the door backward or forward, up or down as necessary to make the gaps equal.
- Place a shop towel on the jack to prevent damage to the door when adjusting the door.

Tightening torque :
(B) : 21.6 - 26.5 N.m (2.2 - 2.7 kgf.m, 15.9 - 19.5 lb-ft)
(C) : 37.3 - 41.2 N.m (3.80 - 4.2 kgf.m, 27.5 - 30.4 lb-ft)

4. Grease the pivot portions of the hinges indicated by the arrows.
5. Check for water leaks.

Body (Interior and Exterior)

Component Location

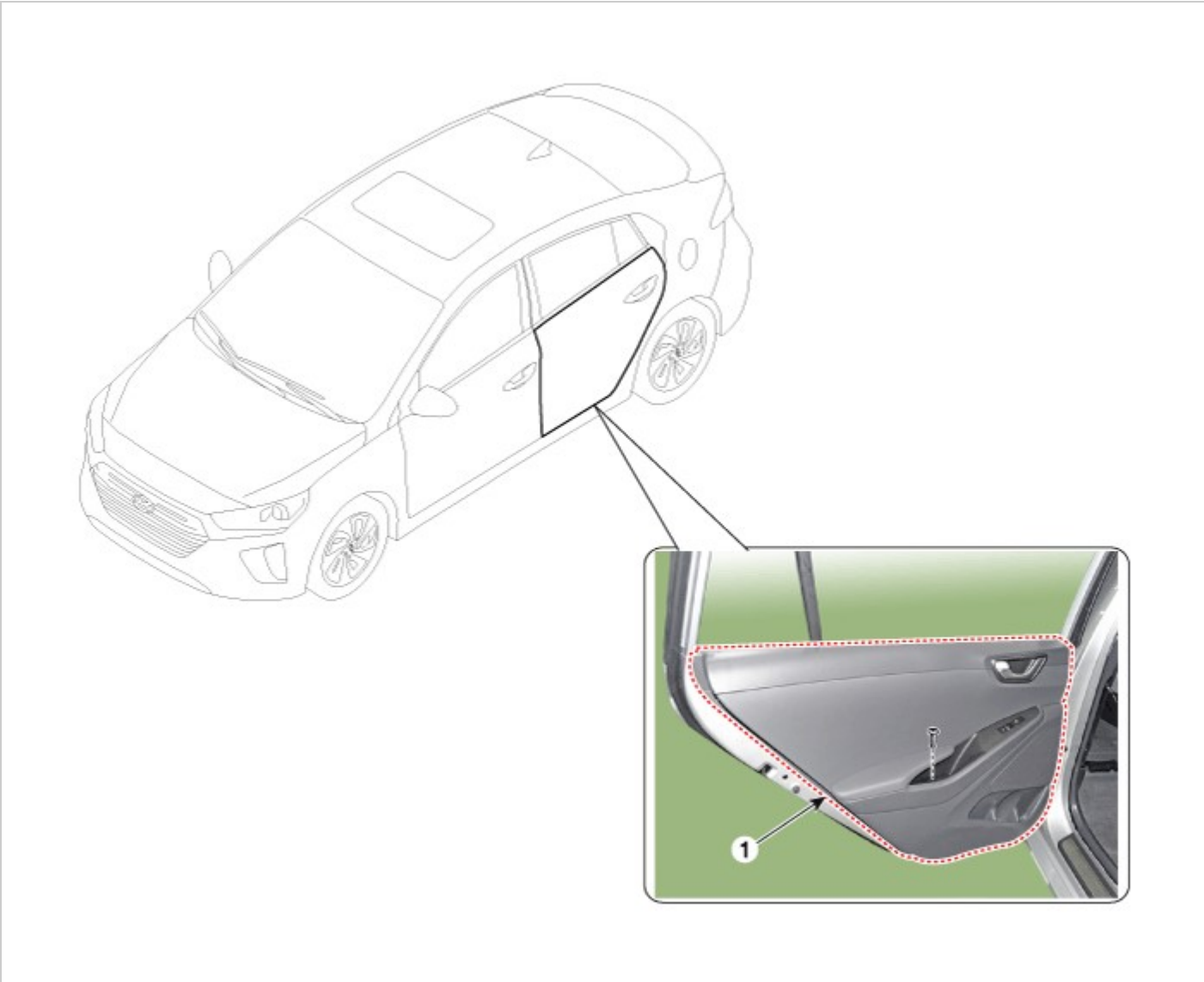

1. Rear door trim

Replacement

CAUTION

- Put on gloves to prevent hand injuries.

NOTICE

- When removing with a flat-tip screwdriver or remover, wrap protective tape around the tools to prevent damage to components.
- Be careful not to scratch the door trim and other parts.

1. Using a screwdriver or remover, remove the rear door pull cap (A).

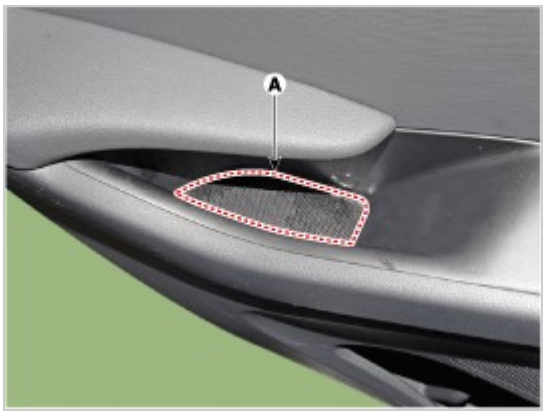

2. After loosening the mounting screws, remove the rear door trim (A).

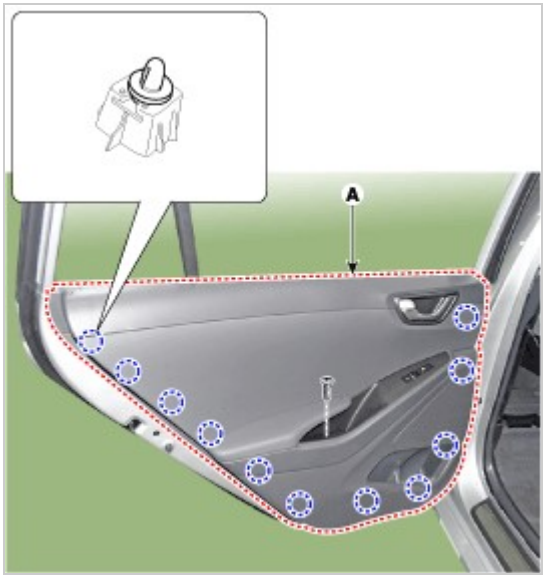

3. Remove the rear door inside handle cage (A).

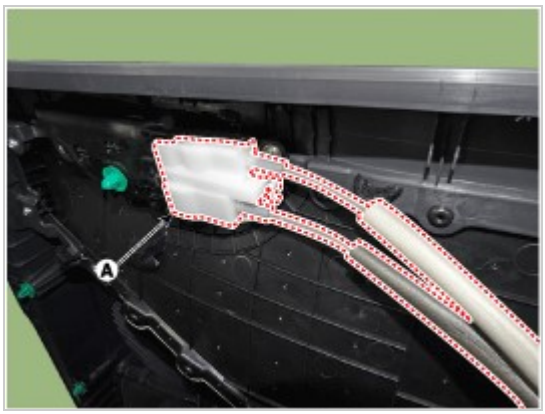

4. Disconnect the power window switch connector (A).

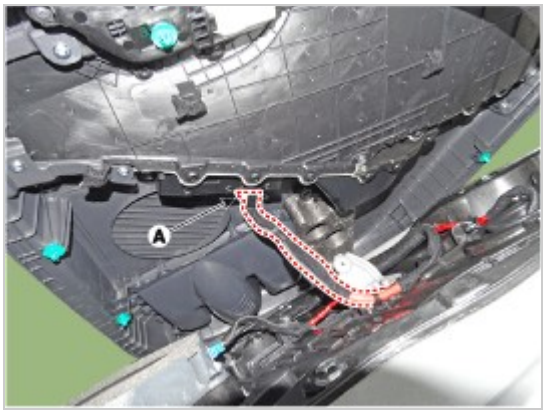

5. To install, reverse the removal procedure.

Information

- Make sure the connector is connected properly.
- Make sure the door locks / unlocks and opens / closes properly.
- Replace any damaged clips (or pin-type retainers).
- Make sure the glass moves properly.

Replacement

1. Remove the rear door trim.
   (Refer to Rear Door - "Rear Door Trim")
2. After loosening the mounting screws, remove the rear door inside handle (A).

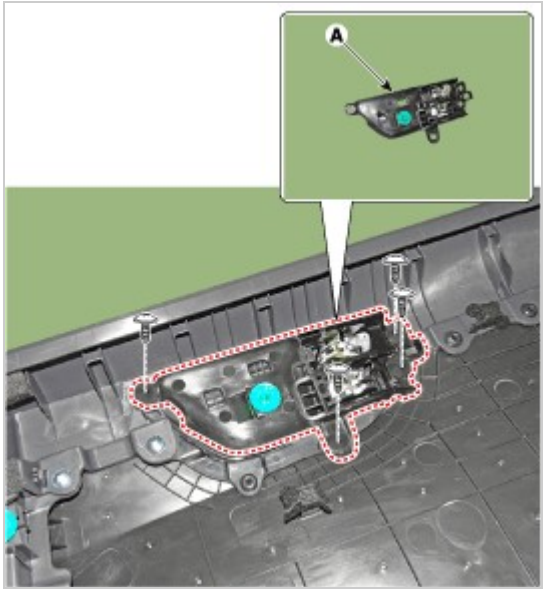

3. To install, reverse the removal procedure.

> **Information**
> - Make sure the door locks / unlocks and opens / closes properly.
> - Replace any damaged clips (or pin-type retainers).

Body (Interior and Exterior)

Component Location

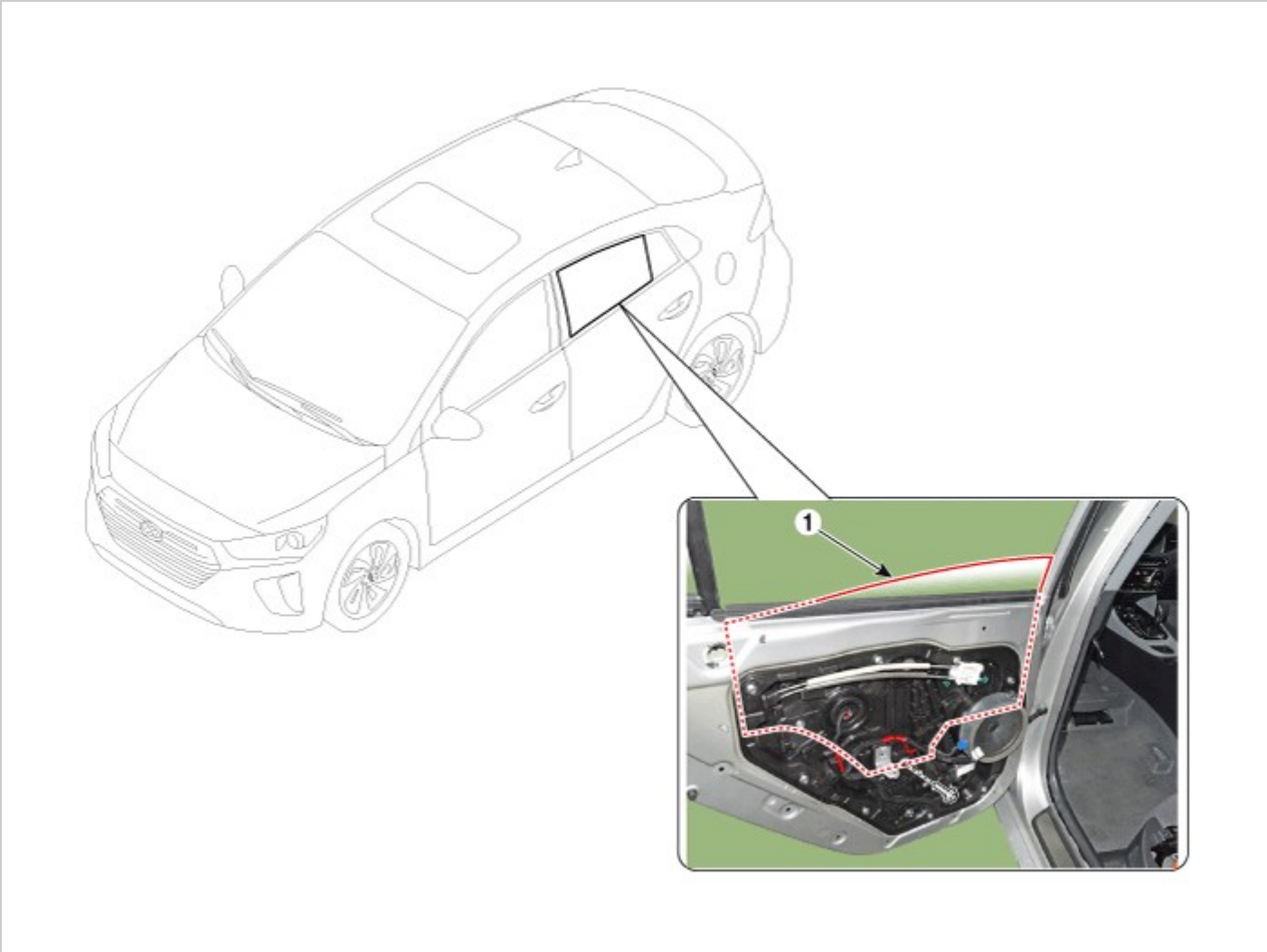

1. Rear door window glass

Body (Interior and Exterior)

Replacement

1. Remove the rear door trim.
   (Refer to Rear Door - "Rear Door Trim")
2. Remove the rear door belt inside weatherstrip (A).

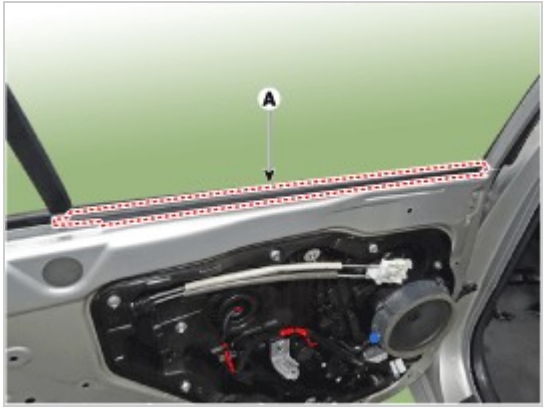

3. Pull down rear door window glass by pressing the power window glass switch.
4. Completely loosen the rear door channel mounting bolts and unscrew the loosely as possible without removing them from the rear door panel.
5. Slightly push the rear door channel (A) in the direction of arrow as below.

   Tightening torque :
   3.9 - 5.9 N.m (0.4 - 0.6 kgf.m, 2.9 - 4.3 lb-ft)

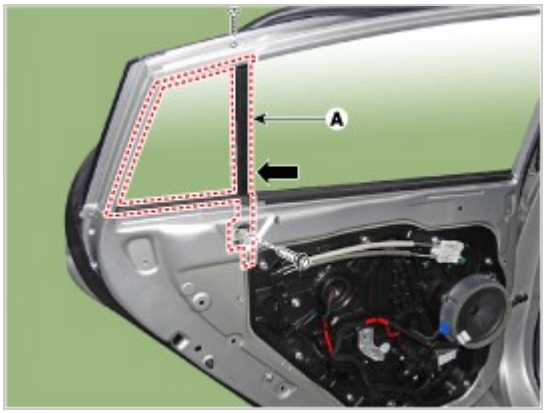

6. Remove the rear door window glass mounting hole plug (A).

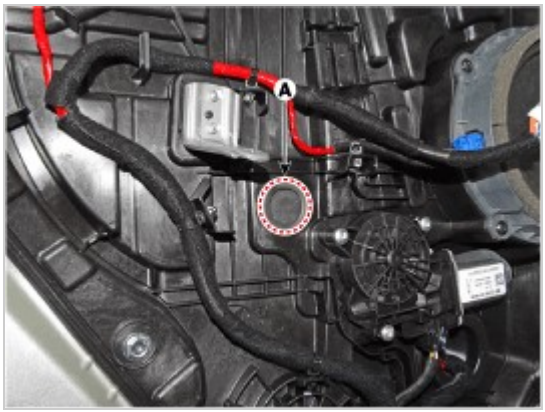

CAUTION

- Be careful not to drop the glass and/or scratch the glass surface.

Information

- Use the door switch to align the mounting hole/bolt with the hole in the door.
- If unable to operate the window motor, remove the motor and align the hole by hand.

7. Carefully adjust the rear door window glass (A) until the bolts are visible, then loosen them. Separate the glass from the glass run and carefully pull the glass out through the window slot.

   Tightening torque :
   8.8 - 11.8 N.m (0.9 - 1.2 kgf.m, 6.5 - 8.7 lb-ft)

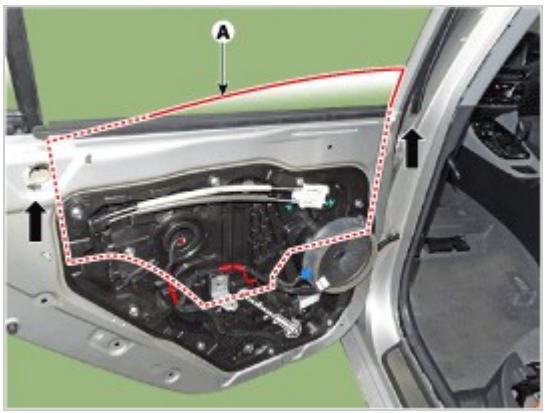

8. To install, reverse the removal procedure.

> **Information**
> - Make sure that the glass rolls up and down smoothly.
> - Adjust glass position as needed.
> - Make sure the door locks and opens properly.
> - Replace any damaged clips (or pin-type retainers).

Body (Interior and Exterior)

Component Location

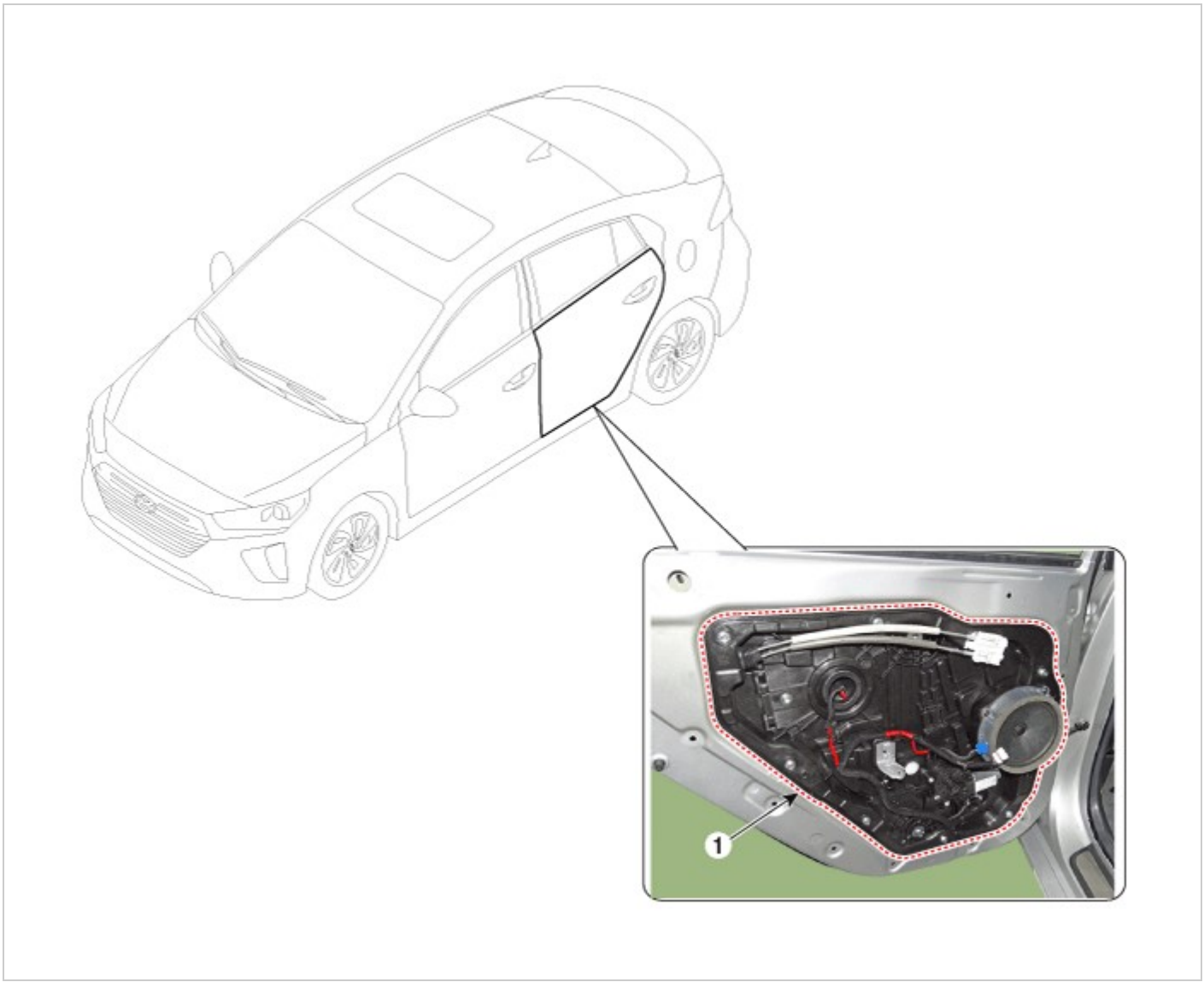

1. Rear door module

Body (Interior and Exterior)

Replacement

1. Remove the rear door window glass.
   (Refer to Rear Door - "Rear Door Window Glass")
2. Remove the rear door outside handle.
   (Refer to Rear Door - "Rear Door Outside Handle")
3. Loosen the rear door outside handle base mounting bolt (A).

   Tightening torque :
   2.0 - 2.9 N.m (0.2 - 0.3 kgf.m, 1.4 - 2.2 lb-ft)

   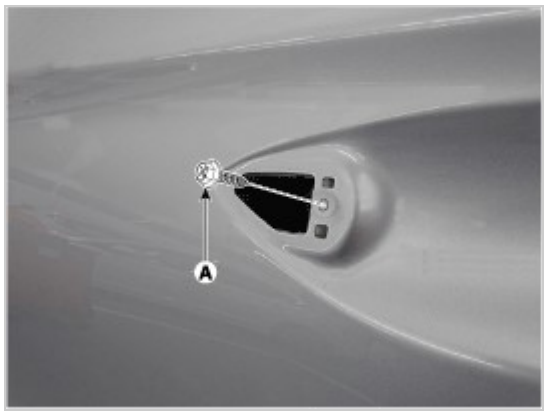

4. Loosen the rear door latch mounting screws.

   Tightening torque :
   6.9 - 10.8 N.m (0.7 - 1.1 kgf.m, 5.0 - 8.0 lb-ft)

5. After loosening the mounting bolts, remove the rear door module (A).

   Tightening torque :
   8.8 - 13.7 N.m (0.9 - 1.4 kgf.m, 6.5 - 10.1 lb-ft)

   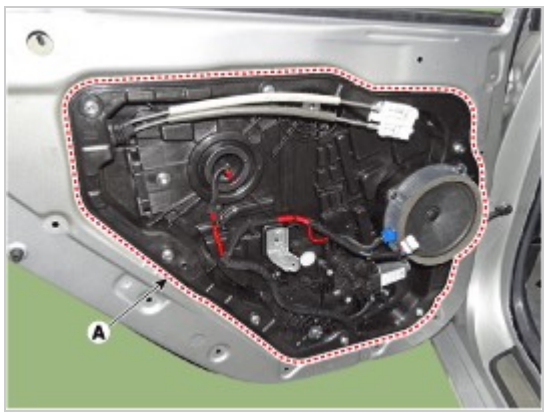

6. Remove the rear door latch assembly.
   (Refer to Front Door - "rear Door Latch")
7. Reomove the rear speaker .
   (Refer to Body Electrical System - "Speakers")
8. Remove the rear power window motor.
   (Refer to Body Electrical System - "Power Window Motor")
9. To install, reverse the removal procedure.

Information

- Make sure connectors are connected properly and each rod is connected securely.
- Make sure the door locks / unlocks and opens / closes properly.

Component Location

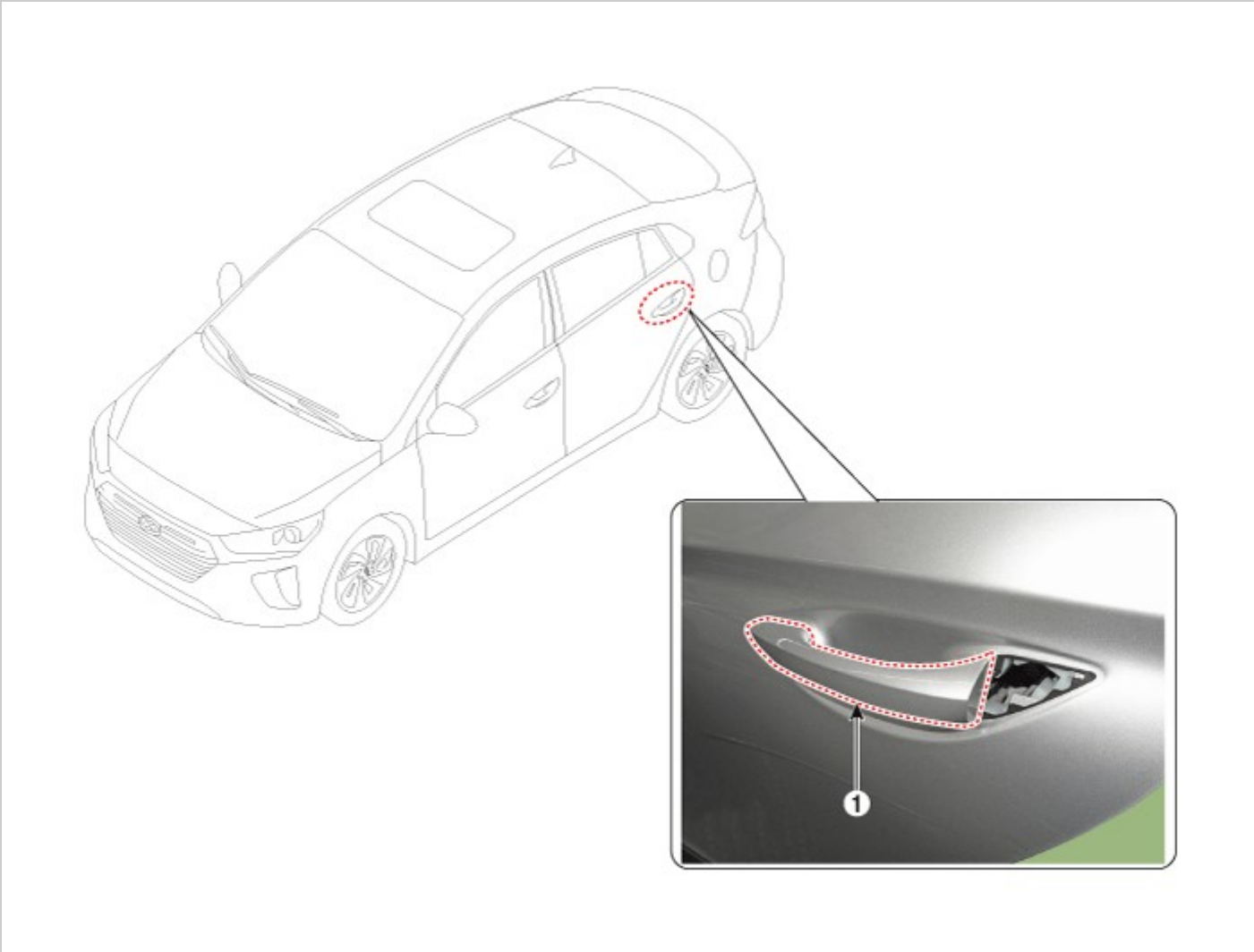

1. Rear door outside handle

Replacement

1. Remove the plug hole (B).
2. After loosening the mounting bolt, remove the front door lock (A).

Tightening torque :
7.8 - 10.8 N.m (0.8 - 1.1 kgf.m, 5.8 - 8.0 lb-ft)

3. Remove the rear door outside handle (A) by pushing it in the direction of arrow.

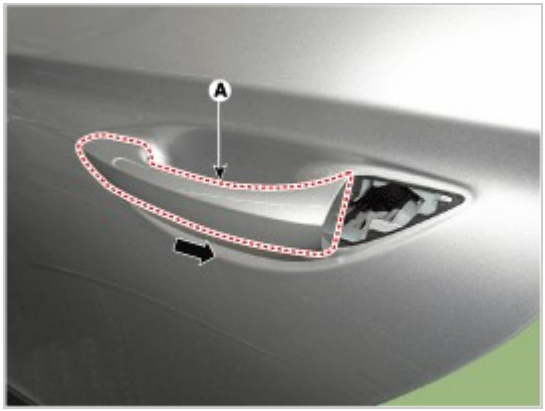

4. To install, reverse the removal procedure.

Information

- Make sure the door locks / unlocks and opens / closes properly.
- Be sure to install the outside handle pad (A) between the outside handle and the door panel.

Component Location

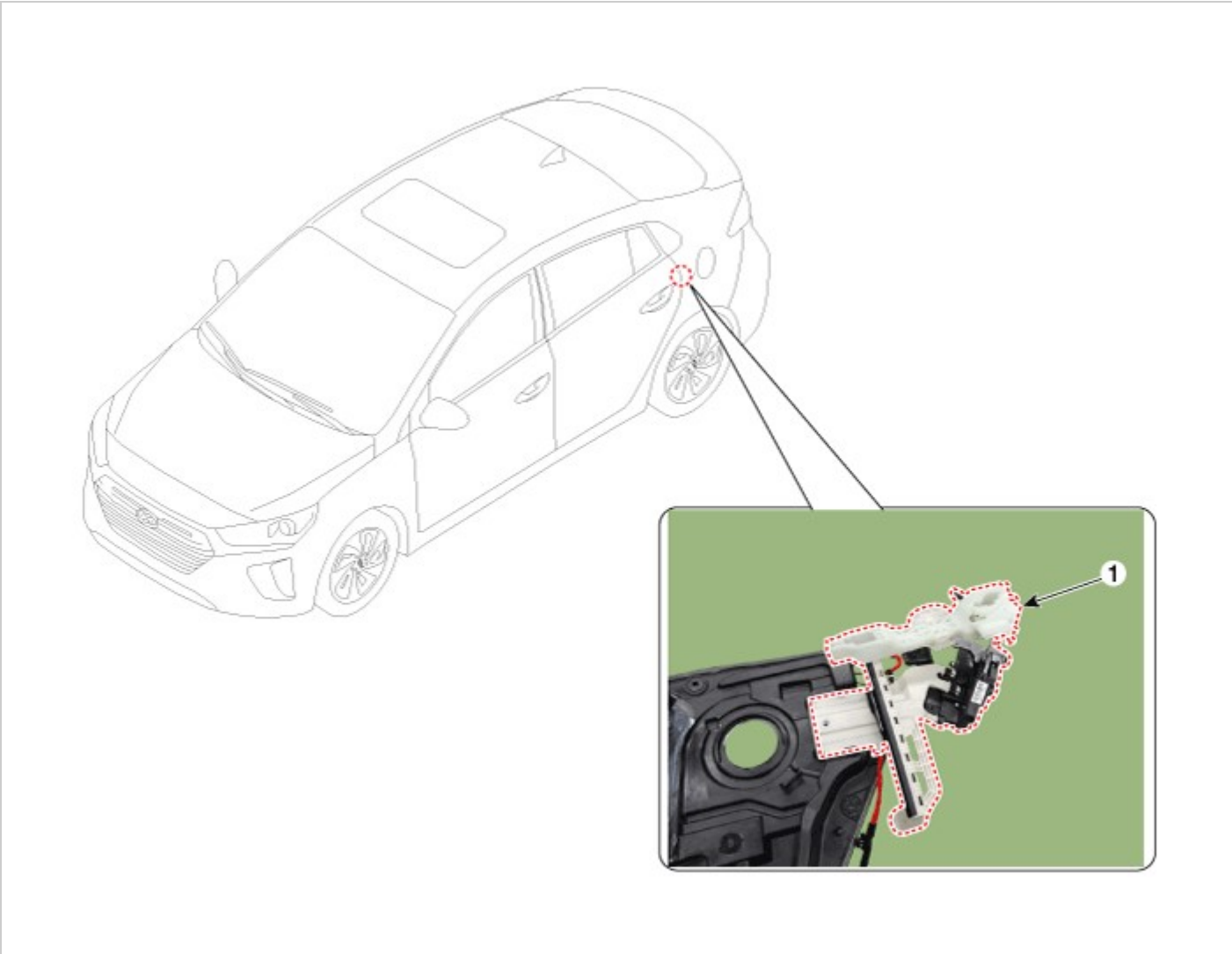

1. Rear door latch

Replacement

1. Remove the rear door module.
   (Refer to Rear Door - "Rear Door Module")
2. Remove the rear door inside handle cage (A).

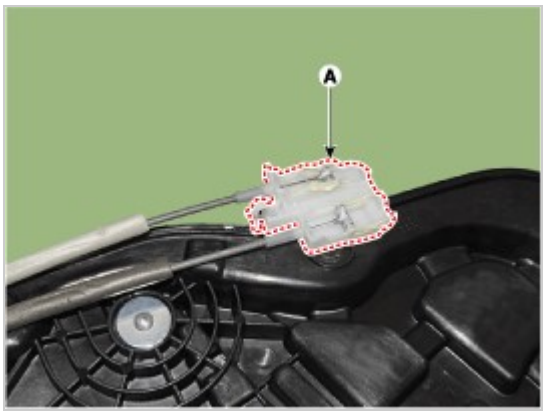

3. Loosen the mounting bolt and remove the rear door latch (A).

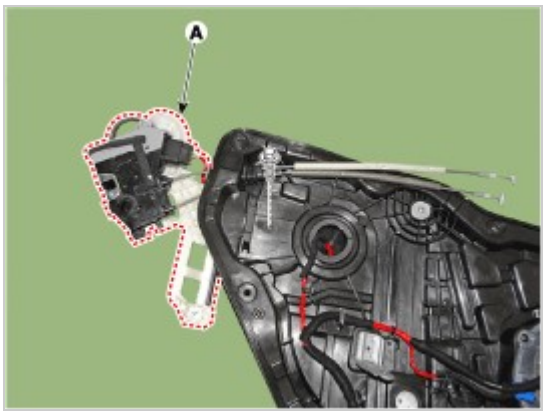

4. Disconnect the rear door latch connector (A).

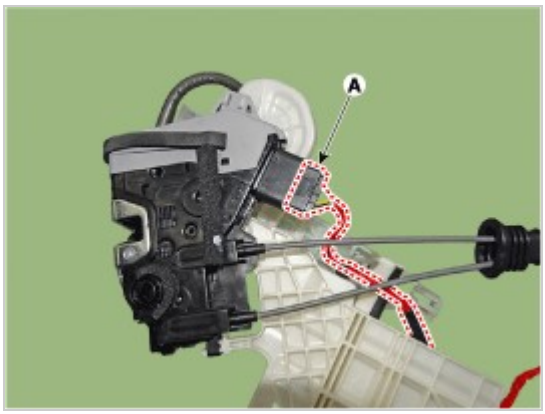

5. Remove the rear door outside handle base (A) by pushing in the lock pins located in the back.

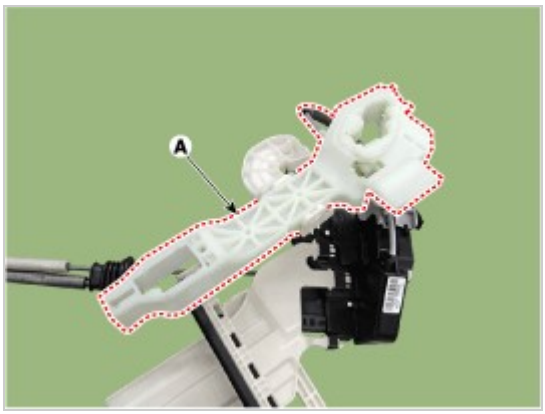

6. Remove the rear door outside handle cable (A).

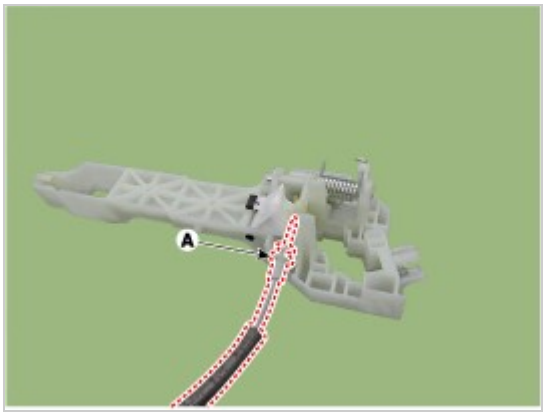

7. To install, reverse the removal procedure.

Information

- Make sure the connector is connected properly.
- Make sure the door locks / unlocks and opens / closes properly.
- Replace any damaged clips (or pin-type retainers).

Replacement

1. Pull down the rear door window glass to the lowest level by pressing the power window glass switch.
2. After loosening the mounting screws, remove the rear door belt outside weatherstrip (A).

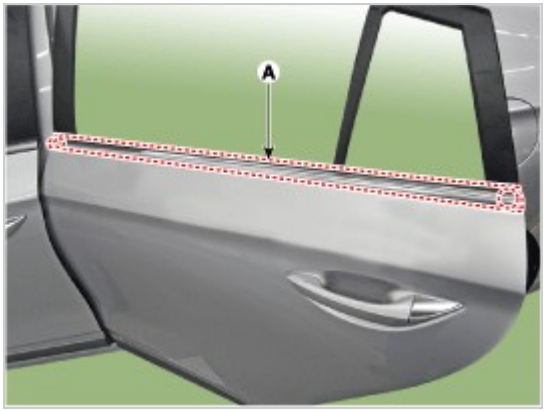

3. To install, reverse the removal procedure.

> **Information**
> - Replace any damaged clips.

Body (Interior and Exterior)

Replacement

1. Remove the rear door trim.
   (Refer to Rear Door - "Rear Door Trim")
2. Remove the rear door belt inside weatherstrip (A).

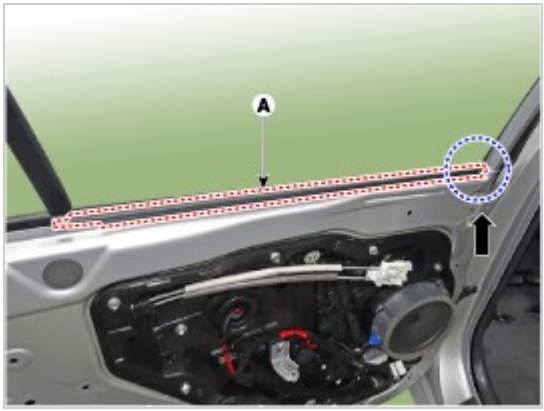

3. To install, reverse the removal procedure.

> **Information**
> - When installing, install it by first contacting the inside part (basis point of assembly) of arrow to door frame.
> - Replace any damaged clips.

Body (Interior and Exterior)

Replacement

[Rear door side weatherstrip]

1. Loosen the rear door checker (B) mounting bolt.

   Tightening torque :
   16.7 - 21.6 N.m (1.7 - 2.2 kgf.m,12.3 - 15.9 lb-ft)

2. Detach the clips, remove the rear door side weatherstrip (A).

3. To install, reverse the removal procedure.

> **Information**
> • Replace any damaged clips.

[Front door body side weatherstrip]

1. Detach the clips, then remove the front door body side weatherstrip (A).

2. To install, reverse the removal procedure.

> **Information**
> • Replace any damaged clips.

Body (Interior and Exterior)

Replacement

> **CAUTION**
> • Put on gloves to prevent hand injuries.

> **NOTICE**
> • When removing with a flat-tip screwdriver or remover, wrap protective tape around the tools to prevent damage to components.
> • Take care not to scratch the body surface.

1. Using a screwdriver or remover, remove the delta garnish (A).

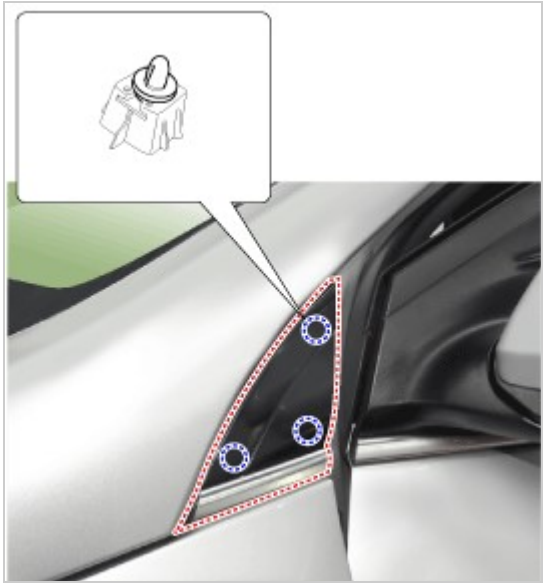

2. To install, reverse the removal procedure.

> **Information**
> - Replace any damaged clips (or pin-type retainers).

Body (Interior and Exterior)

Replacement

> **CAUTION**
> - Put on gloves to prevent hand injuries.

> **NOTICE**
> - When removing with a flat-tip screwdriver or remover, wrap protective tape around the tools to prevent damage to components.
> - Take care not to scratch the body surface.

1. Using a screwdriver or remover, remove the quarter garnish (A).

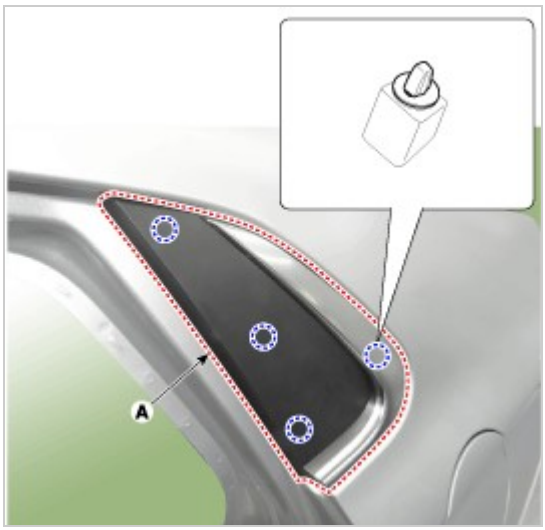

2. To install, reverse the removal procedure.

> **Information**
> - Replace any damaged clips.

Body (Interior and Exterior)

Components Location

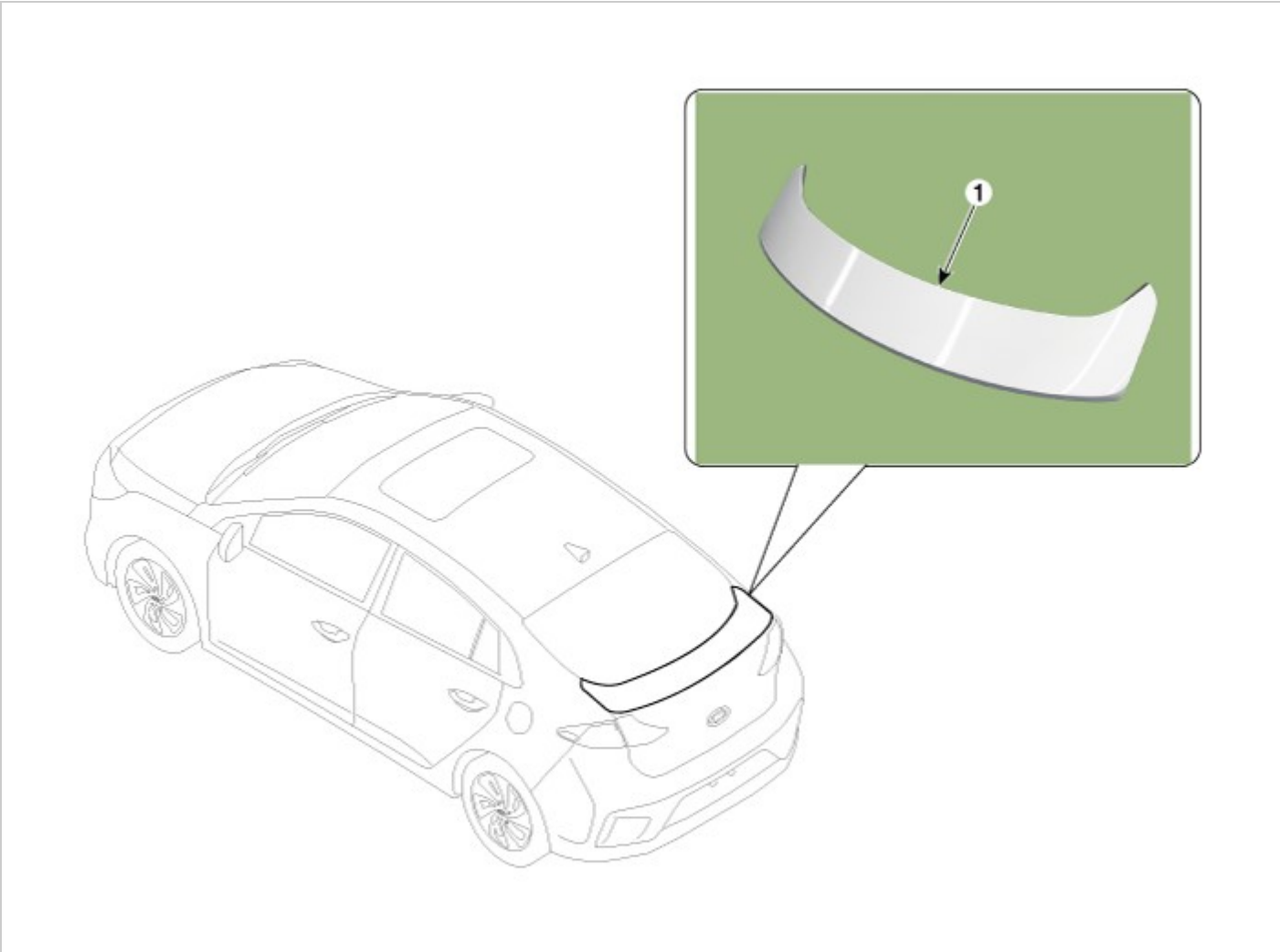

1. Rear spoiler

Replacement

CAUTION

- Put on gloves to prevent hand injuries.

NOTICE

- When removing with a flat-tip screwdriver or remover, wrap protective tape around the tools to prevent damage to components.
- Take care not to scratch the body surface.

1. Remove the liftgate side trim.
   (Refer to Liftgate - "Liftgate Trim")
2. Remove the rear spoiler plug hole (A).

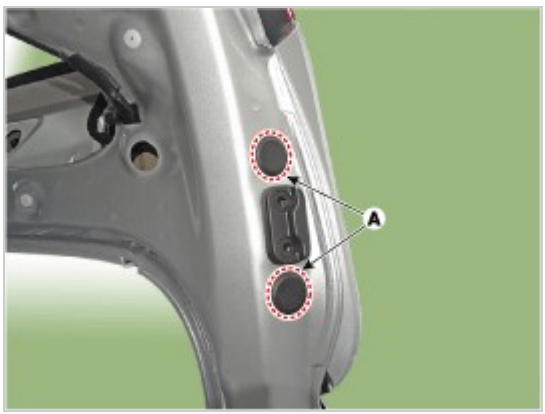

3. Disconnect the rear spoiler connector (A).

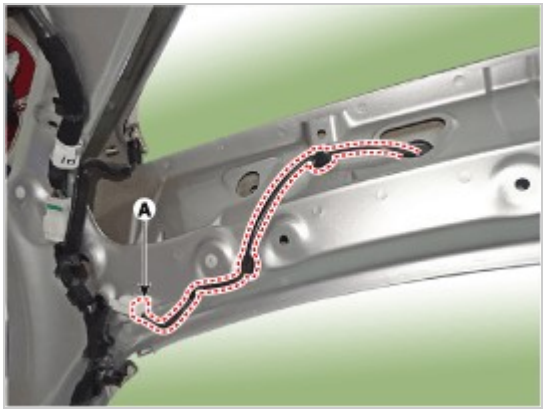

4. Loosen the mounting bolt and remove the rear spoiler (A).

Tightening torque :
5.9 - 6.4 N.m (0.6 - 0.65 kgf.m, 4.3 - 4.7 lb-ft)

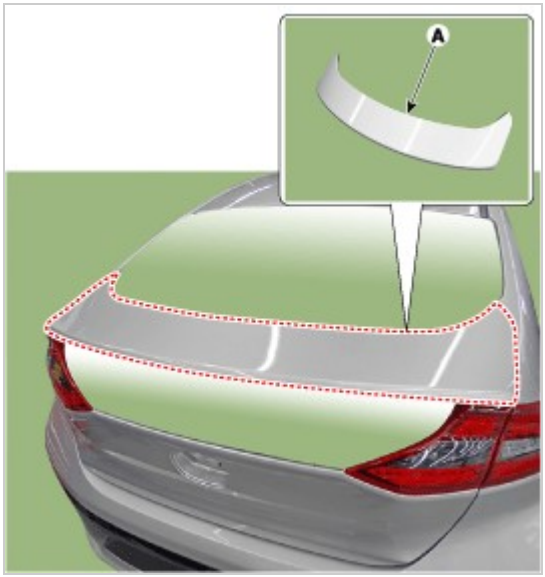

5. To installintall, reverse the removal procedure.

Information
- Replace any damaged clips.
- Make sure the connector is connected properly.

Body (Interior and Exterior)

Replacement

CAUTION
- Put on gloves to prevent hand injuries.

NOTICE
- When removing with a flat-tip screwdriver or remover, wrap protective tape around the tools to prevent damage to components.
- Take care not to scratch the body surface.

1. Remove the engine room cover.
   (Refer to Engine Mechanical System - " Engine Room Cover")
2. Remove the front tire.
3. After loosening the mounting clips and remove the front wheel guard (A).

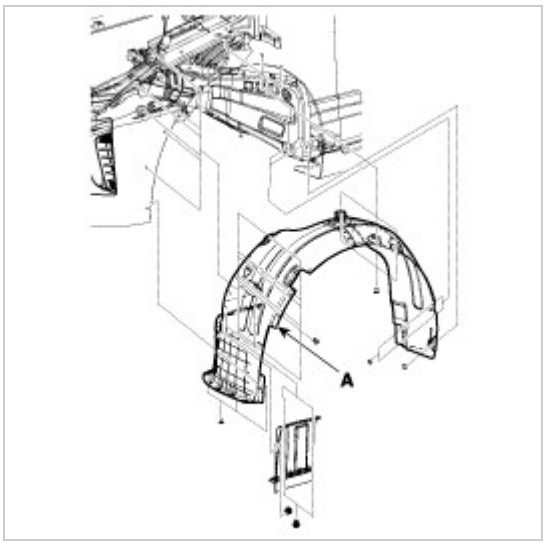

4. To install, reverse the removal procedure.

Information

- Replace any damaged clips (or pin-type retainers).

Body (Interior and Exterior)

Replacement

CAUTION

- Put on gloves to prevent hand injuries.

NOTICE

- When removing with a flat-tip screwdriver or remover, wrap protective tape around the tools to prevent damage to components.
- Take care not to scratch the body surface.

1. Remove the rear tire.
2. After loosening the mounting screws, clips and nut, remove the rear wheel guard (A).

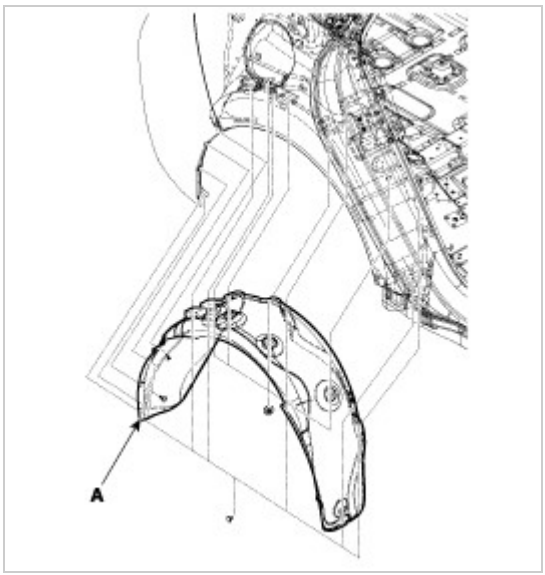

3. To install, reverse the removal procedure.

Information

- Replace any damaged clips (or pin-type retainers).

Replacement

CAUTION

- Put on gloves to prevent hand injuries.

NOTICE

- When removing with a flat-tip screwdriver or remover, wrap protective tape around the tools to prevent damage to components.
- Take care not to scratch the body surface.

1. Using a screwdriver or remover, remove the front waist line molding (A).
2. Using a screwdriver or remover, remove the rear waist line molding (B).

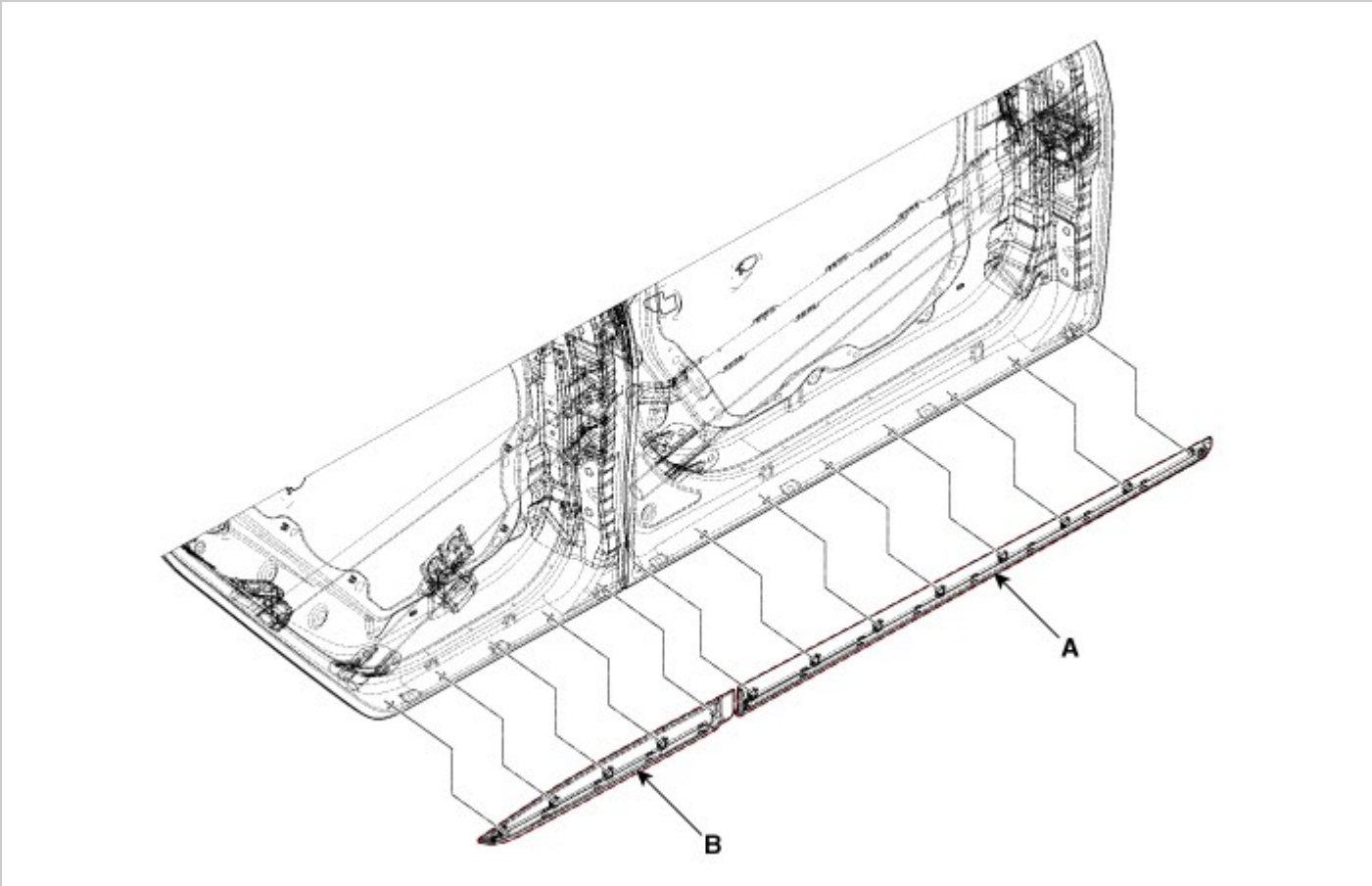

3. To install, reverse the removal procedure.

Information

- Replace any damaged clips.

Replacement

CAUTION

- Put on gloves to prevent hand injuries.

NOTICE

- When removing with a flat-tip screwdriver or remover, wrap protective tape around the tools to prevent damage to components.
- Take care not to scratch the body surface.

1. Loosen the side sill molding mounting clips.
2. Using a screwdriver or remover, remove the side sill molding (A).

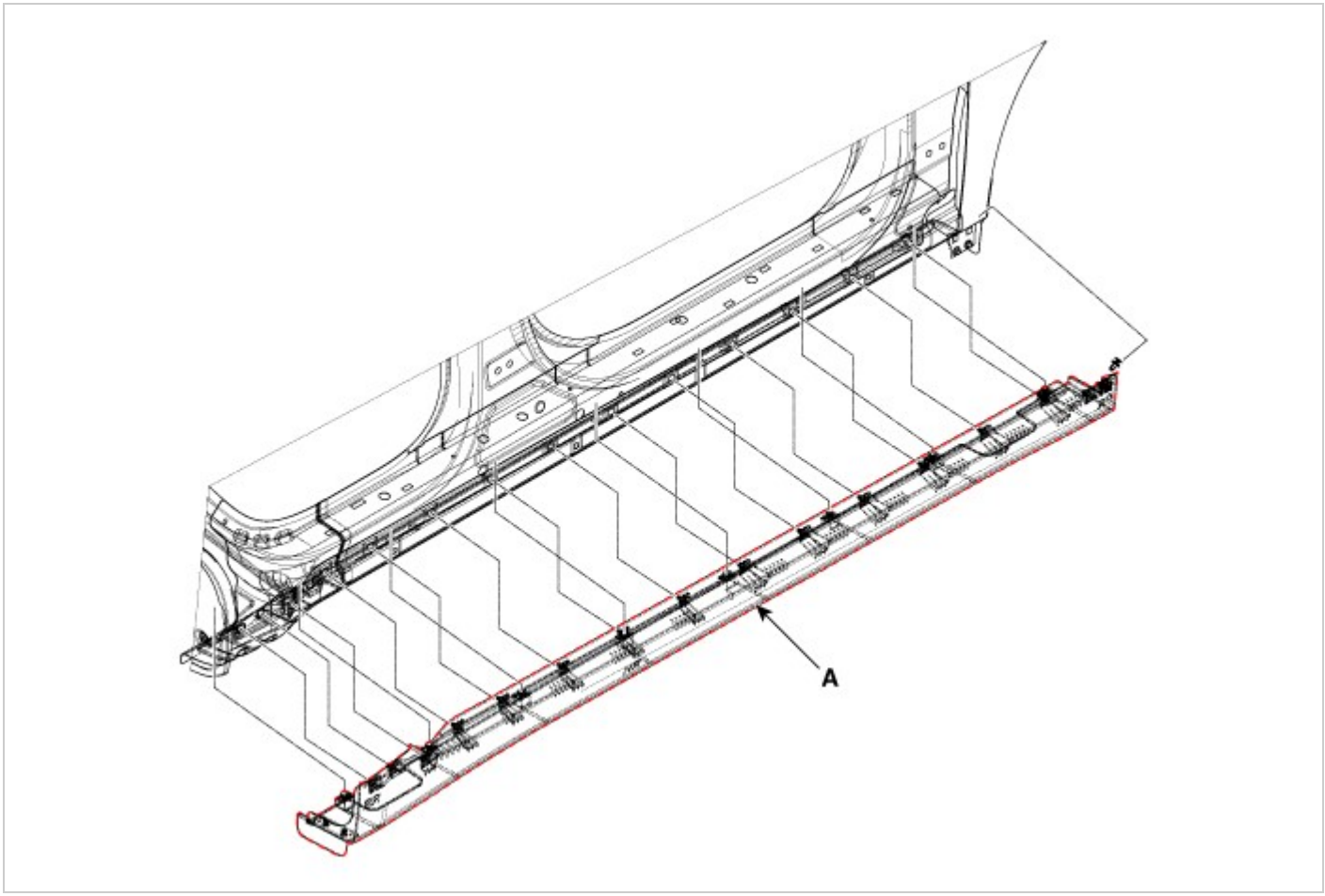

3. To install, reverse the removal procedure.

> **Information**
> - Replace any damaged clips.

Body (Interior and Exterior)

Replacement

> **CAUTION**
> - Put on gloves to prevent hand injuries.

> **NOTICE**
> - When removing with a flat-tip screwdriver or remover, wrap protective tape around the tools to prevent damage to components.

1. Using a screwdriver or remover, remove the roof side molding (A).

> **Information**
> - Always replace the roof side molding to a new one.

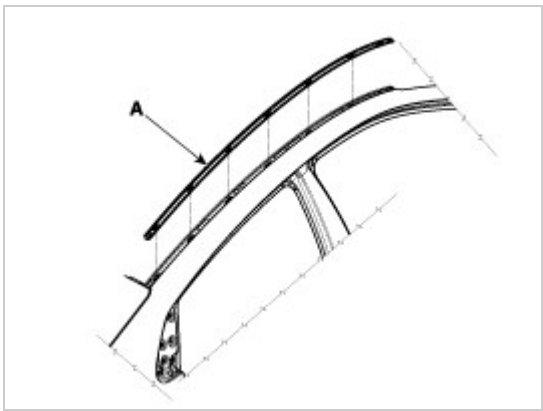

2. To install, reverse the removal procedure.

Information

- Replace any damaged clips (or pin-type retainers).

Body (Interior and Exterior)

Components

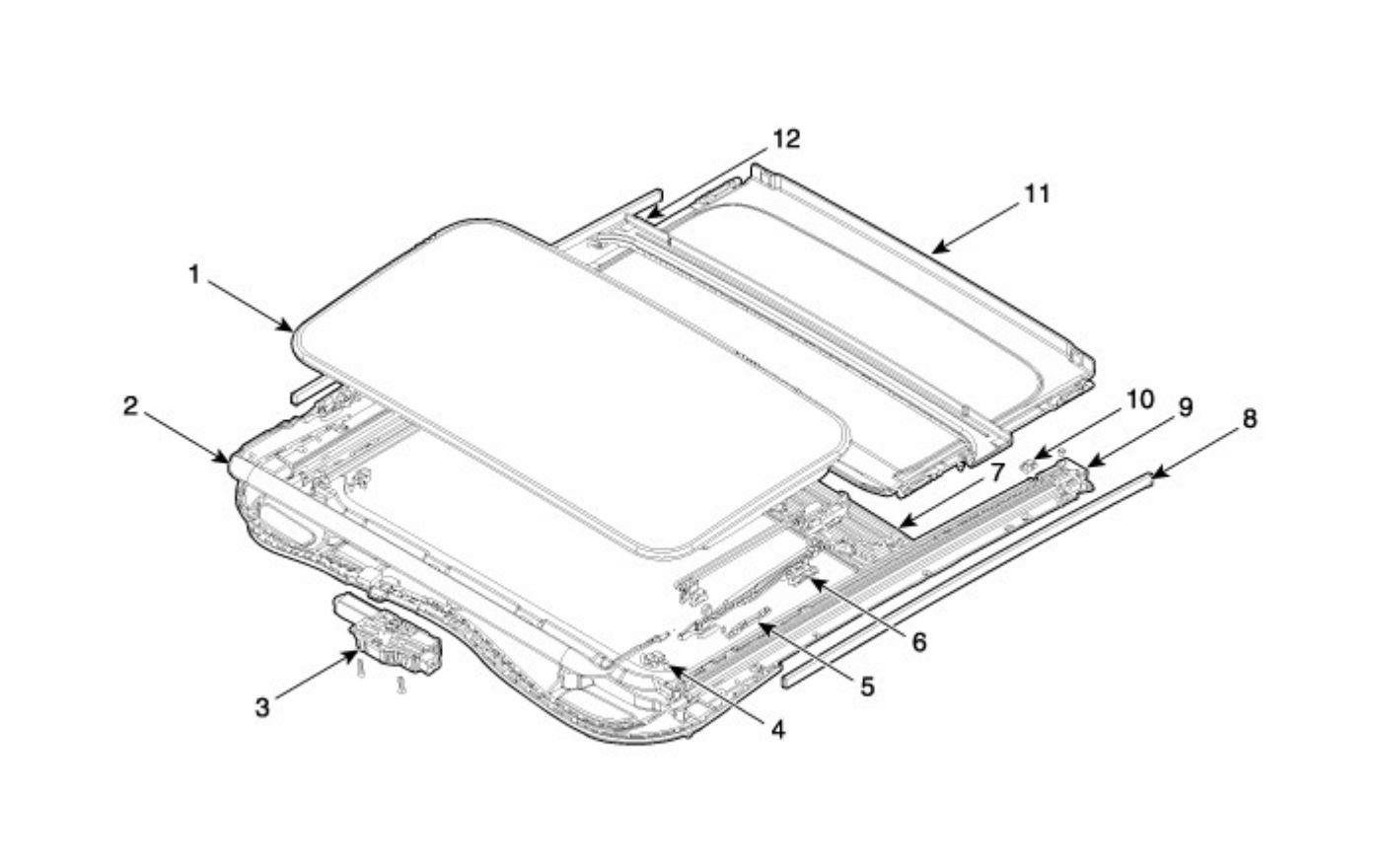

1. Glass panel assembly
2. Deflector
3. Motor assembly
4. Spring base assembly
5. Seth plate assembly
6. Guide assembly
7. Frame sub assembly
8. Seal tape
9. Rear drip
10. Stopper
11. Sunshade assembly
12. Drip rail assembly

Body (Interior and Exterior)

Adjustment

Inspect Glass Alignment

1. Inspect the step height between the roof panel (A) and the glass weatherstrip (B) and then adjust it if necessary.

   Alignment adjustment
   Standard value [mm(in.)]
   (1) Front edge : 0 mm (0 in.)
   (2) Rear edge : 0 mm (0 in.)
   (3) Side edge : 0 mm (0 in.)

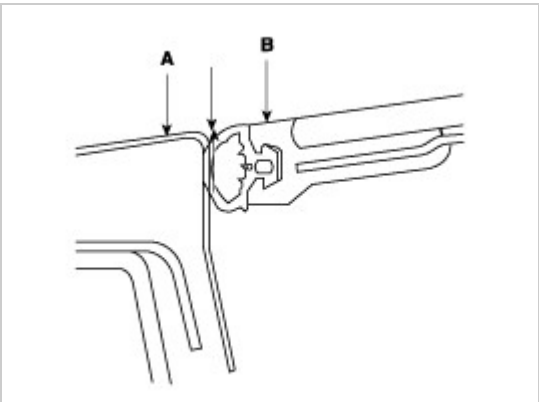

2. Adjust the height of the glass by slighly loosening the screws (A).

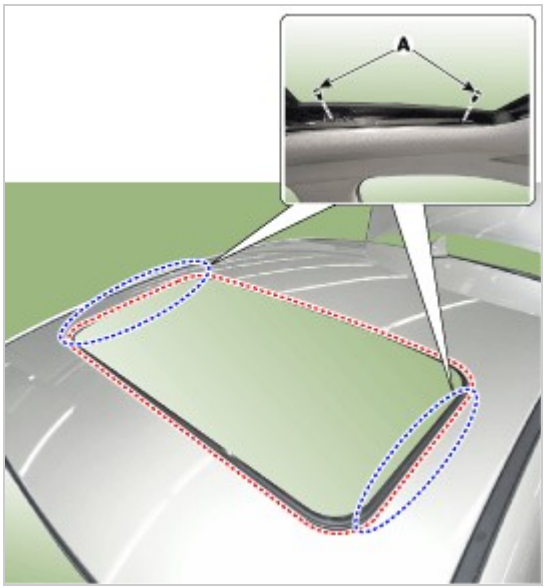

When To Initialize The Motor

1. After initial vehicle assembly.
2. If the initial value is erased or damaged because of short power electric discharge during operation.
3. After using the manual handle.

Operating The Sunroof Emergency Handle

1. Use the sunroof emergency handle to close or open the sunroof manually if the sunroof cannot be closed electronically due to motor or controller electrical malfunction.

2. If needed, initialize the sunroof according to the initialization method.
   Whenever the vehicle battery is disconnected or discharged, or you use the emergency handle to operate the sunroof, you have to reset your sunroof system as follows :
   (1) Turn the ignition key to the ON position and then close the sunroof completely.
   (2) Release the sunroof control lever.
   (3) Press and hold the CLOSE button for more than 10 seconds until the sunroof closed and it has moved slightly.
   (4) Release the sunroof control lever.
   (5) Press and hold the CLOSE button once again within 3 seconds until the sunroof does as follows:
   - Tilt down → Slide Open → Slide Close

   Then release the lever.
   (6) Reset procedure of sunroof system is finished.

Body (Interior and Exterior)

Components Location

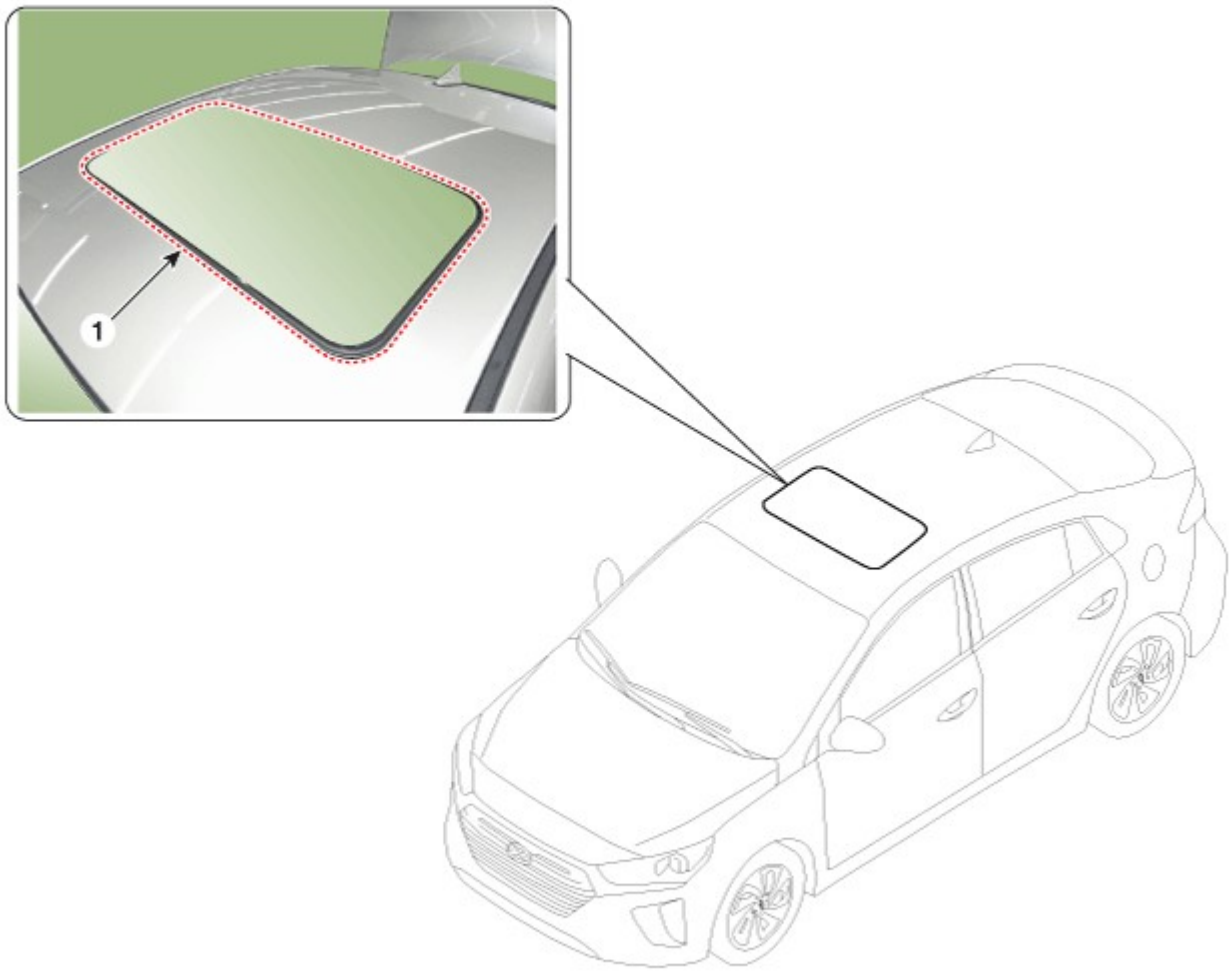

1. Sunroof glass

Replacement

NOTICE

- Put on glove to protect your hands.

1. Close the sunroof glass completely by pressing the sunroof switch.
2. Loosen the mounting screws (A) and remove the sunroof glass (B).

CAUTION

- Do not damage the roof panel.

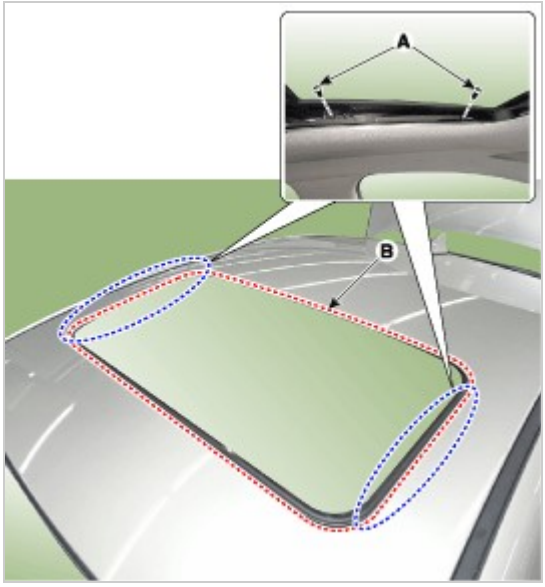

3. To install, reverse the removal procedure.

> **Information**
> • After replacing the movable glass adjust the alignment if needed.

Body (Interior and Exterior)

Replacement

1. Open the glass fully.
2. Remove the mounting pins (C), from the frame (B), and then remove the deflector (A).

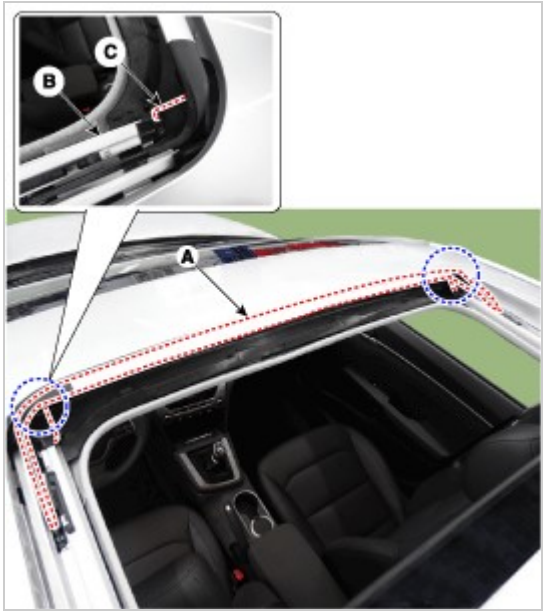

3. To install, reverse the removal procedure.

Body (Interior and Exterior)

Components Location

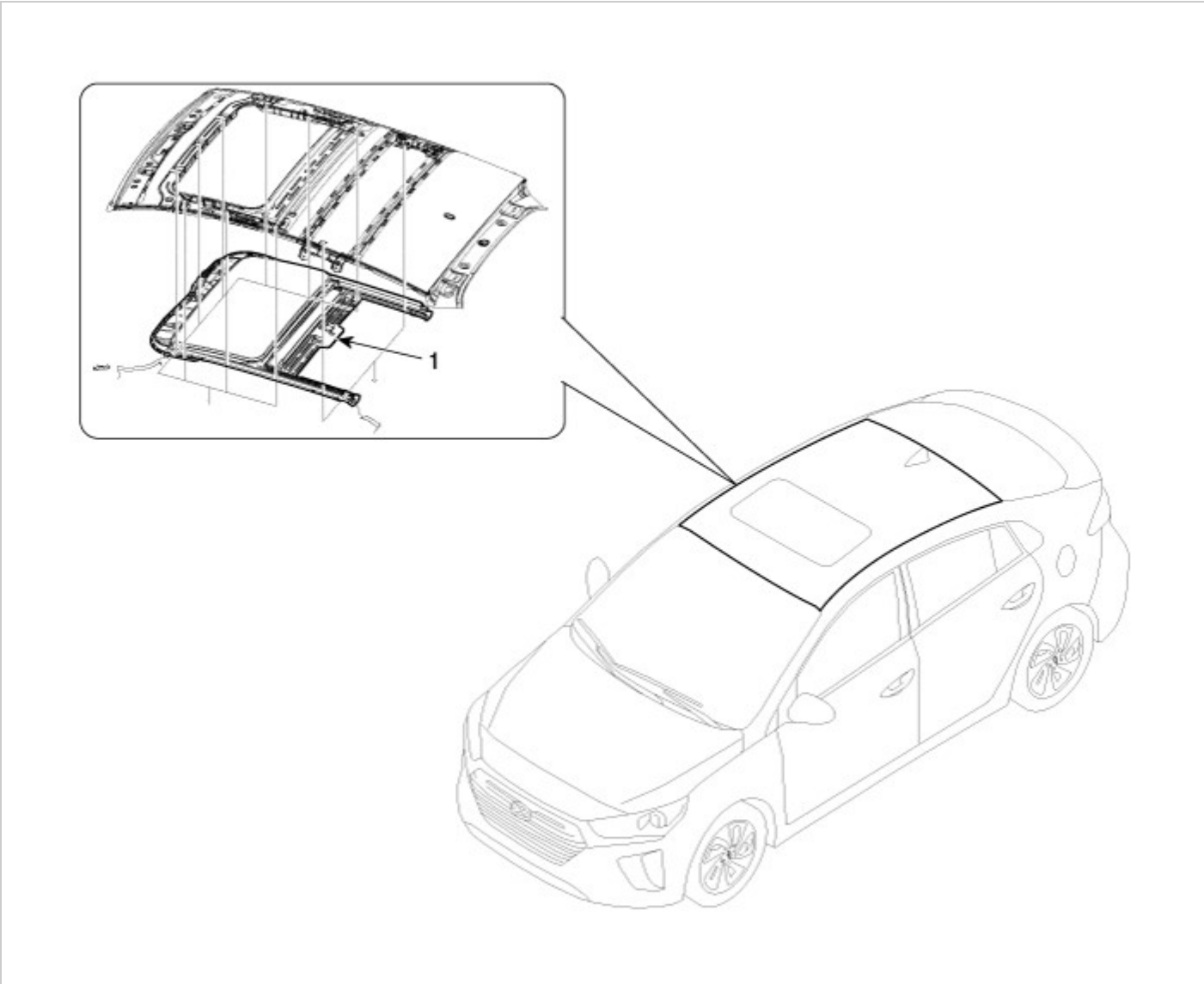

1. Sunroof assembly

Replacement

NOTICE

- When removing with a flat-tip screwdriver or remover, wrap protective tape around the tools to prevent damage to components.
- Put on glove to protect your hands.

1. Remove the roof trim.
   (Refer to Roof Trim - "Roof Trim Assembly")
2. Remove the sunroof glass.
   (Refer to Sunroof - "Sunroof Glass")
3. Loosen the mounting screws and remove the sunroof motor (A).

4. After loosening the mounting bolts, then remove the assist handle bracket (A).

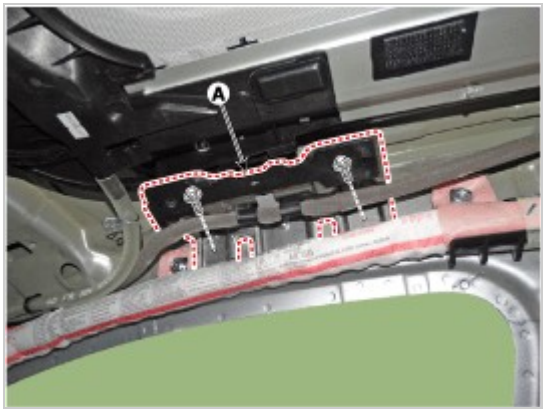

5. Disconnect the drain tubes (B).
6. After loosening the mounding nuts and bolts, remove the sunroof assembly (A).

Tightening torque

Bolt : 7.8 - 11.8 N.m (0.8 - 1.2 kgf.m, 5.8 - 8.7 lb-ft)

Nut : 3.9 - 5.9 N.m (0.4 - 0.6 kgf.m, 2.9 - 4.3 lb-ft)

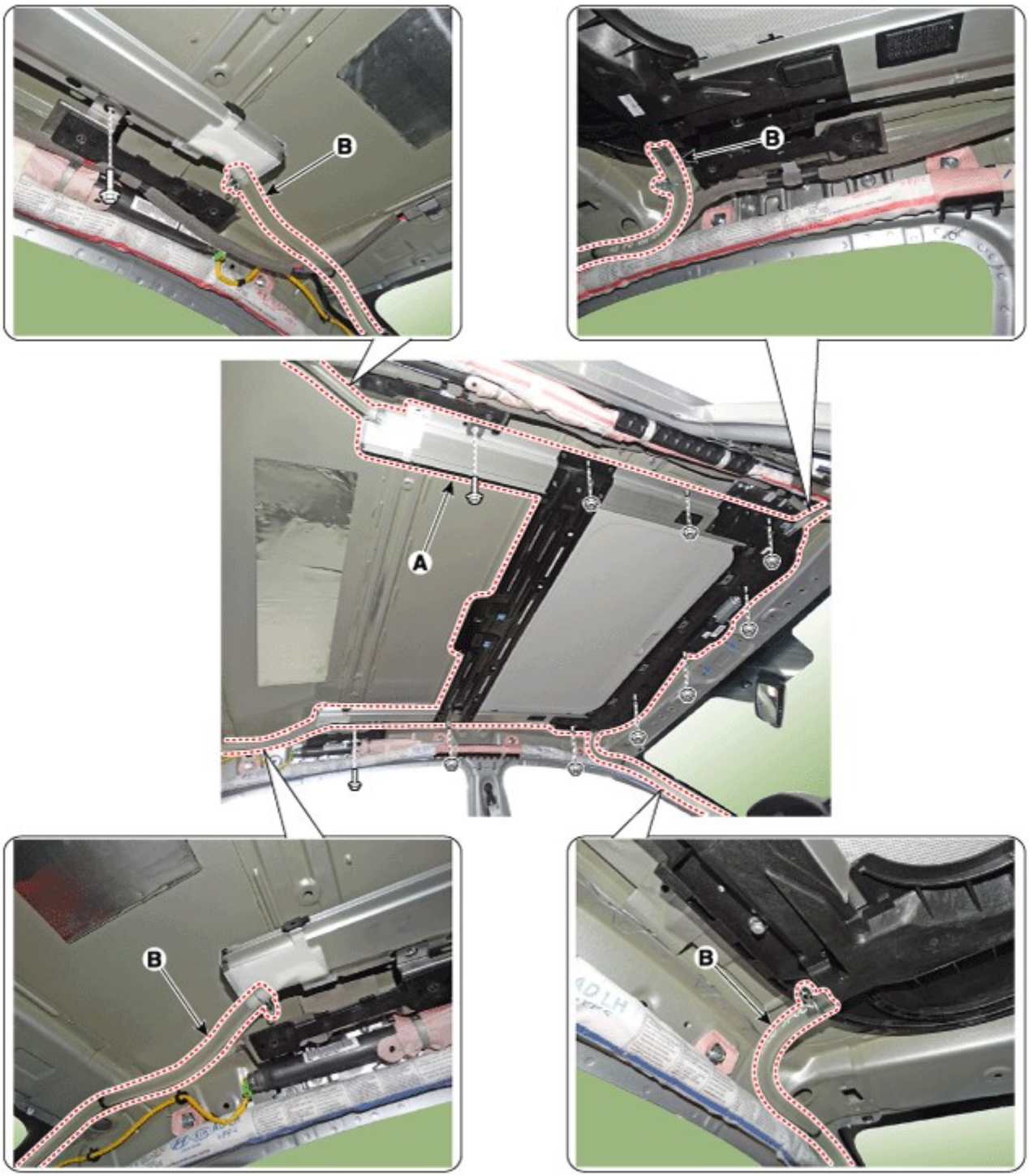

7. To install, reverse the removal procedure.

> **Information**
> - Make sure to initialize the motor.

Body (Interior and Exterior)

Replacement

1. Remove the sunroof assembly.
   (Refer to Sunroof - "Sunroof Assembly")
2. After loosening the mounting screws, remove the drip rail assembly (A).

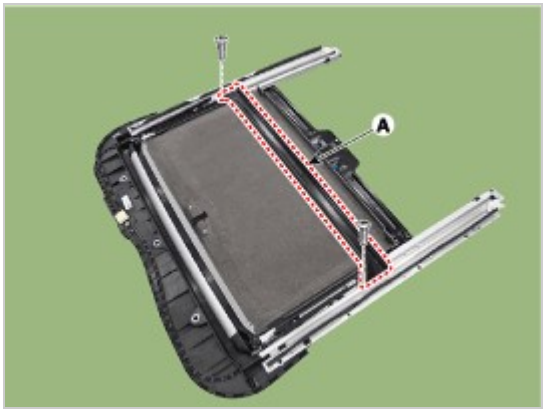

3. After loosening the mounting screws, disengage the rear drip (A).

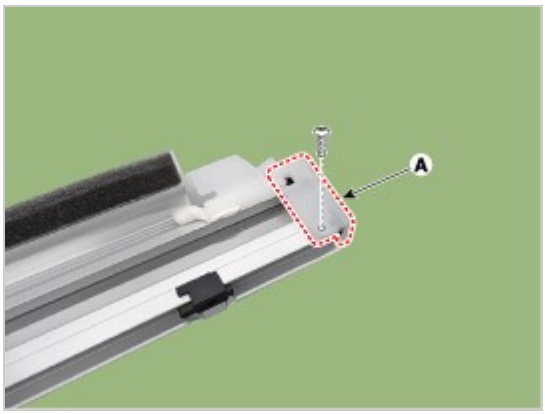

4. Remove the stopper (A) by pushing it in the direction of the arrow.

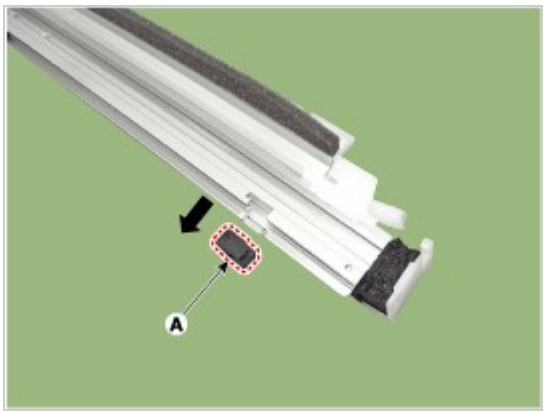

5. Remove the sunroof sunshade (A) by pushing it backward.

6. To install, reverse the removal procedure.

Body (Interior and Exterior)

Replacement

1. Remove the sunroof assembly.
   (Refer to Sunroof - "Sunroof Assembly")
2. Remove the sunroof sunshade.
   (Refer to Sunroof - "Sunroof Sunshade")
3. Down the slide by pushing it and then remove the drip link assembly (A).

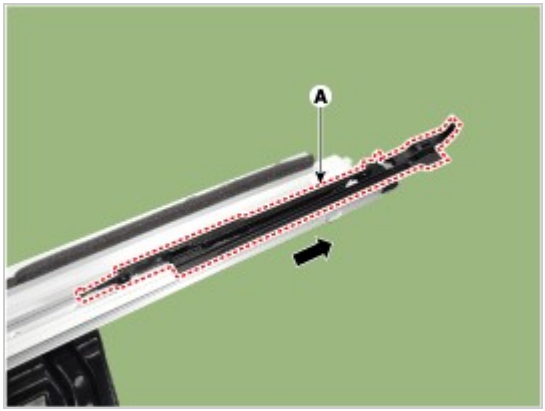

4. Separate the drip link (B) and guide (A).

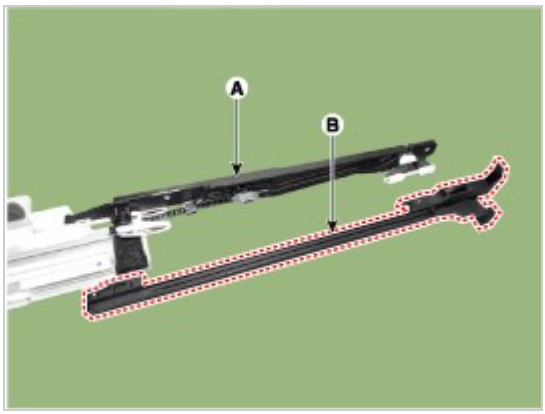

5. Remove the shoe (A).

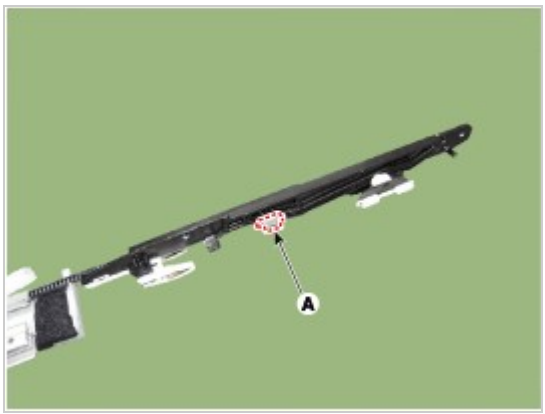

6. Separate the guide assembly (A) and the cable (B) by pushing them in the direction of the arrow.

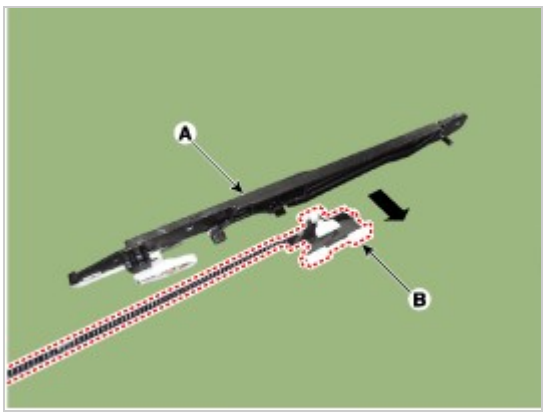

7. To install, reverse the removal procedure.

Information

- Place the position between (A) and (B) like the picture.
- Make sure to initialize the motor.

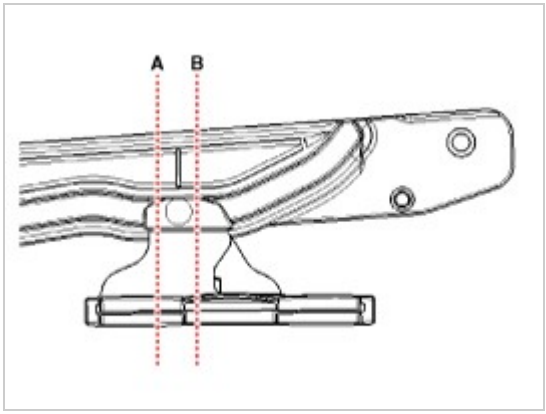

Component Location

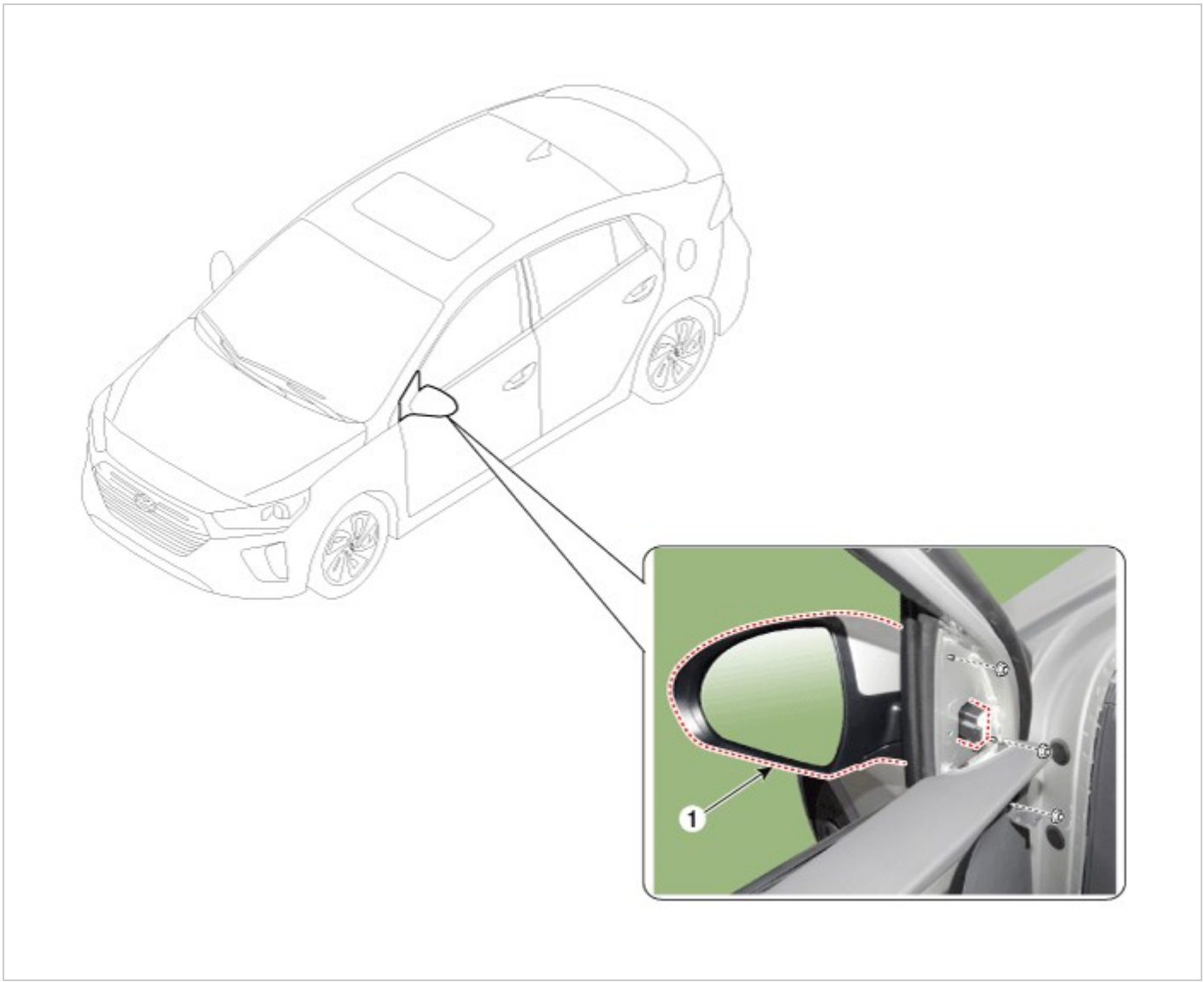

1. Outside rear view mirror

Replacement

CAUTION

- Put on gloves to prevent hand injuries.

NOTICE

- When removing with a flat-tip screwdriver or remover, wrap protective tape around the tools to prevent damage to components.
- Take care not to scratch the body surface.

1. Using a screwdriver or remover, remove the front door quadrant inner cover (A).

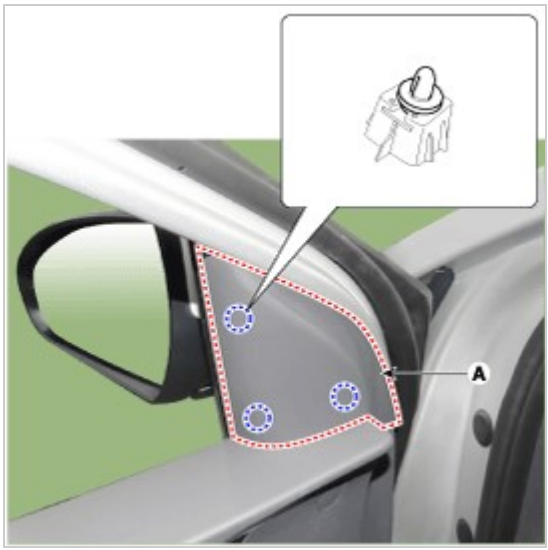

2. Disconnect the outside rear view mirror connector (A).

3. Using a screwdriver or remover, remove the rear view mirror cap (A).

4. After loosening the mounting nuts, remove the outside rear view mirror (A).

Tightening torque :
6.9 - 10.8 N.m (0.7 - 1.1 kgf.m, 5.1 - 8.0 lb-ft)

5. To install, reverse the removal procedure.

Information

- Make sure the connector is connected properly.
- Replace any damaged clips (or pin-type retainers).

Component Location

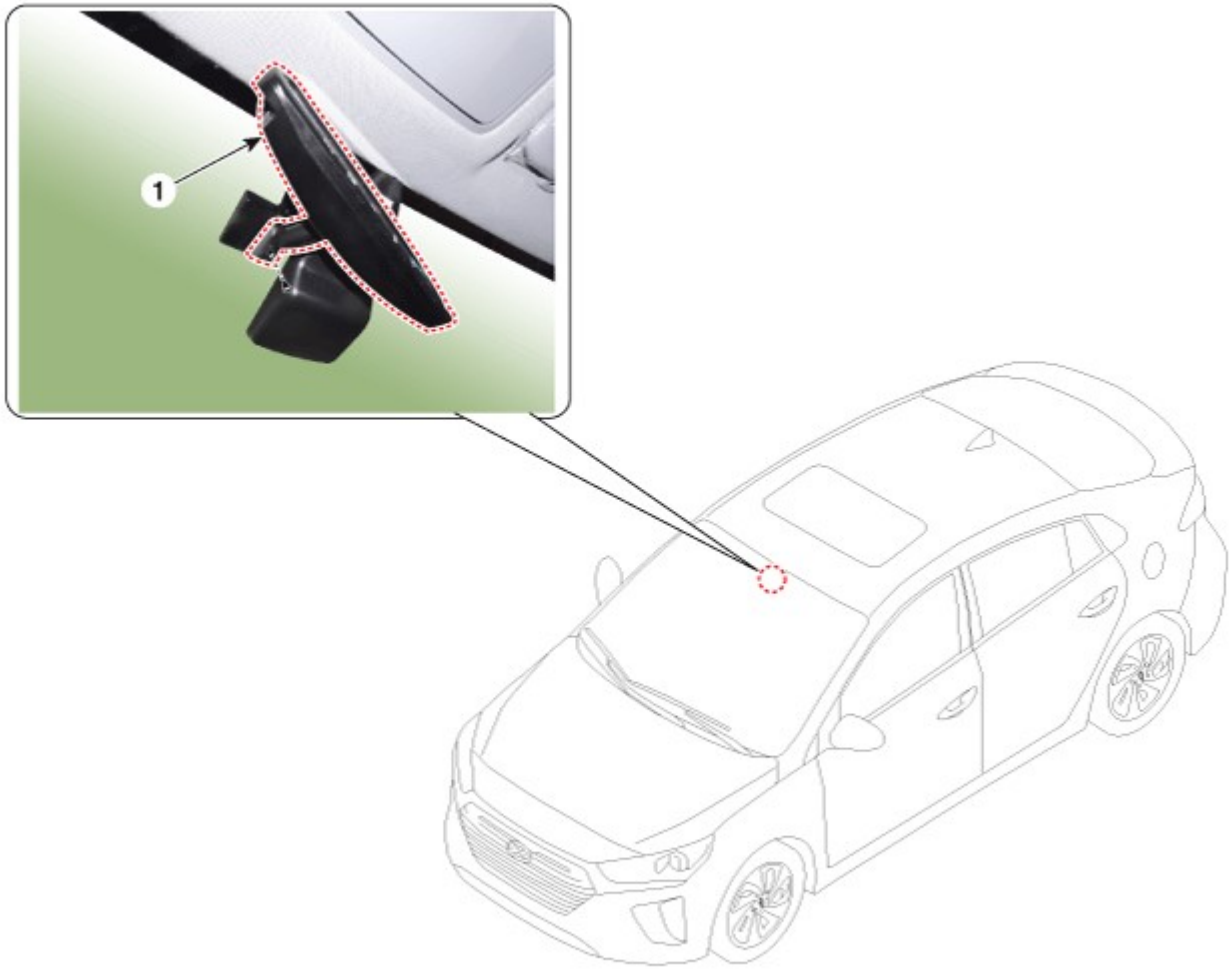

1. Inside rear view mirror

Replacement

CAUTION
Put on gloves to prevent hand injuries.

1. Remove the inside rear view mirror cover (A).

2. Disconnect the ECM mirror connector (A).

3. Loosen the mounted screws and push the ECM mirror base upward to remove the ECM mirror assembly (A).

4. To install, reverse the removal procedure.

Information

- Make sure the connector is connected properly.
- Be careful not to damage the windshield glass.

Component Location

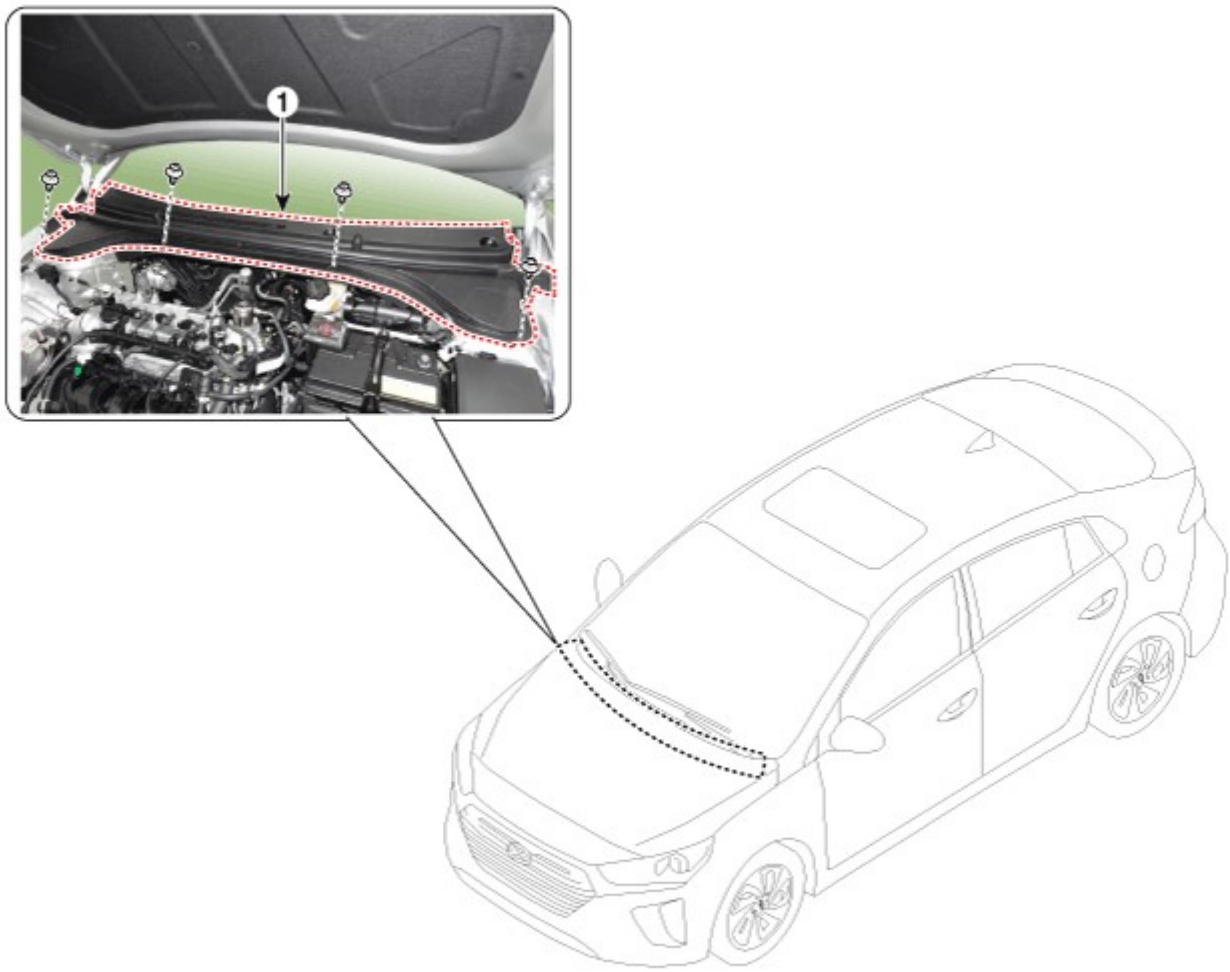

1. Cowl top cover

Replacement

1. Remove the plug hole.

2. Loosen the mounting nuts and remove the wiper arm (A).

Tightening torque :
22.6 - 26.5 N.m (2.3 - 2.7 kgf.m, 16.6 - 19.5 lb-ft)

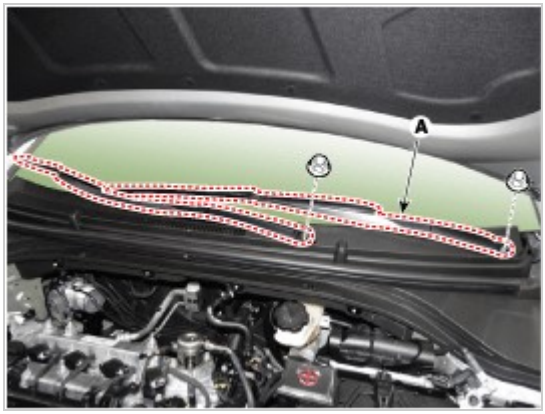

3. Using a screwdriver or remover, remove the cowl side cover (A).

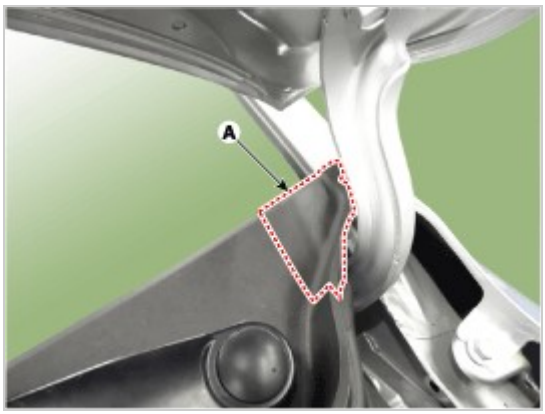

4. Disconnect the washer nozzle (A).
5. Detach the clips, then remove the cowl top cover (B).

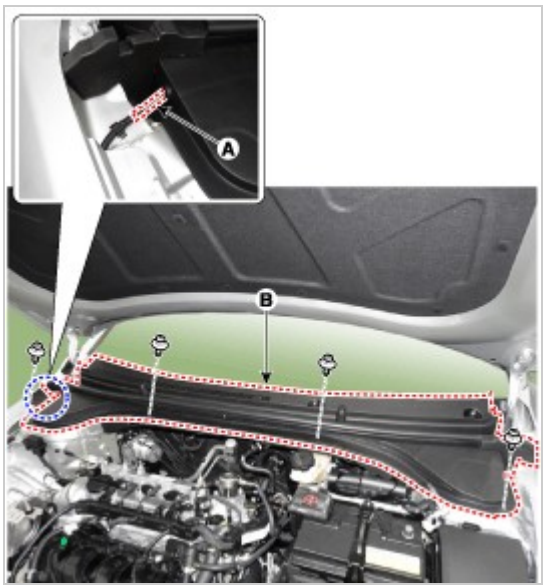

6. To install, reverse the removal procedure.

Information

- Replace any damaged clips (or pin-type retainers).

Components

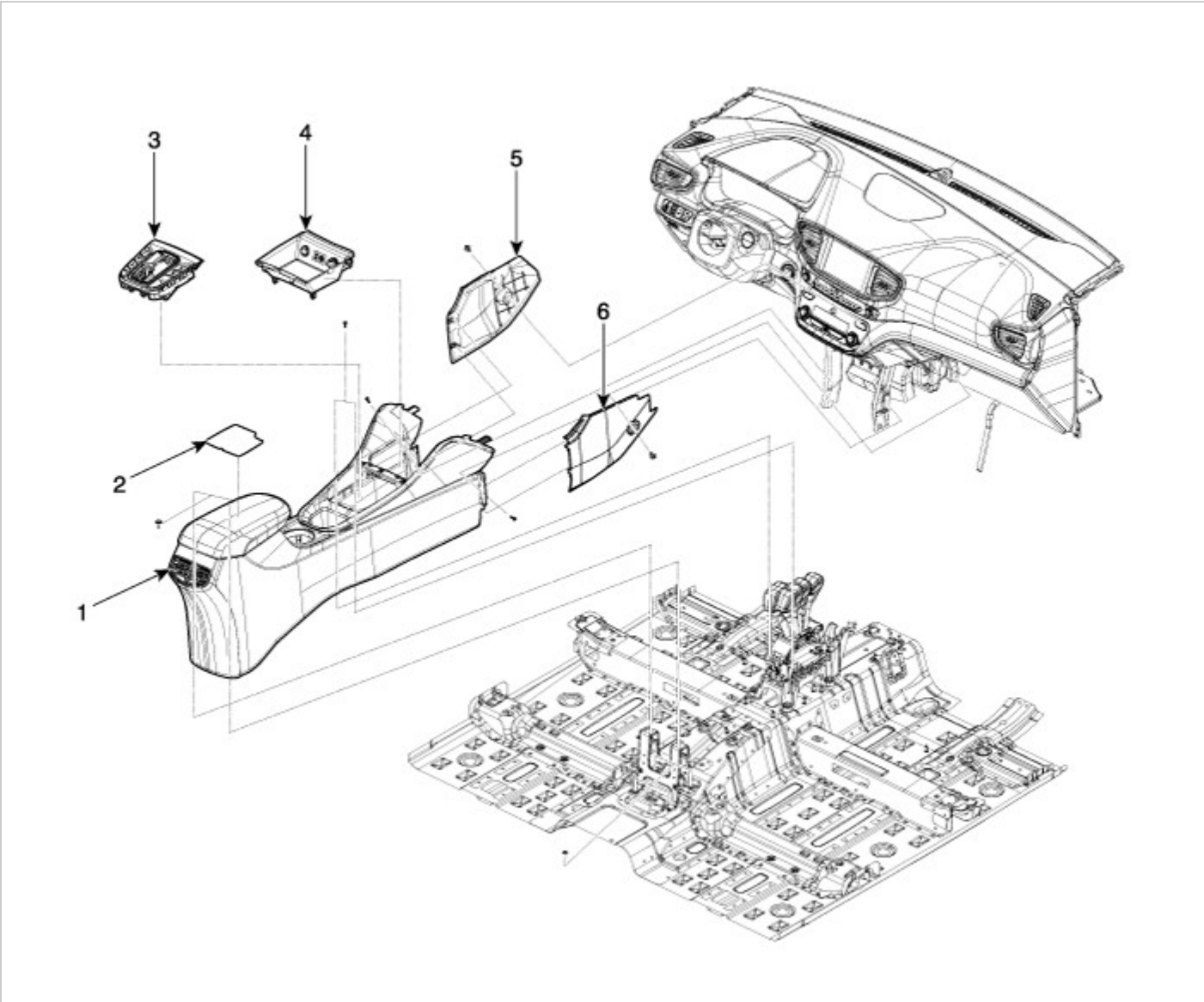

1. Console complete assembly
2. Console tray mat
3. Console upper complete assembly
4. Floor console tray assembly
5. Front console side cover [LH]
6. Front console side cover [RH]

Component Location

1. Floor console assembly

Replacement

CAUTION

- Put on gloves to prevent hand injuries.

CAUTION

- When removing with a flat-tip screwdriver or remover, wrap protective tape around the tools to prevent damage to components.
- Use a plastic panel removal tool to remove interior trim pieces without marring the surface.
- Take care not to bend or scratch the trim and panels.

1. Using a screwdriver or remover, remove the gear knob & boot (A).

2. Remove the gear knob & boots (A) pull both of it up.

3. Remove the rubber mat (A).

4. Using a screwdriver or remover, remove the wireless charging unit (A).

5. Disconnect the wireless charging connector (A).

6. Using a screwdriver or remover, remove the console upper cover (A).

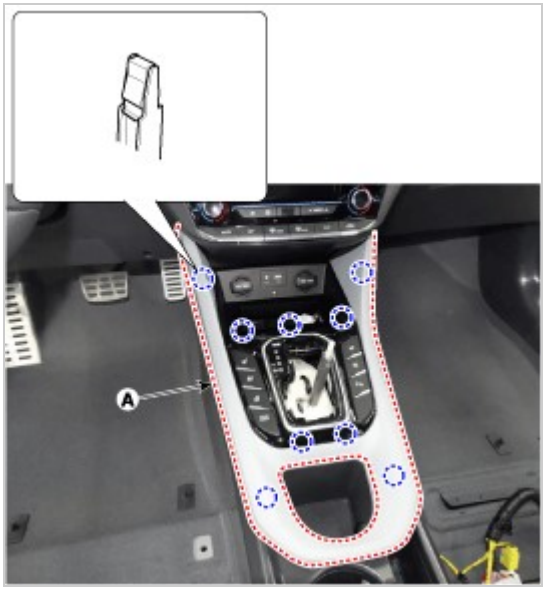

7. Disconnect the main connector (A).

8. Using a screwdriver or remover, remove the console side cover (A).

9. Disconnect the power outlet connector (A).

10. Remove the storage box pad (A).

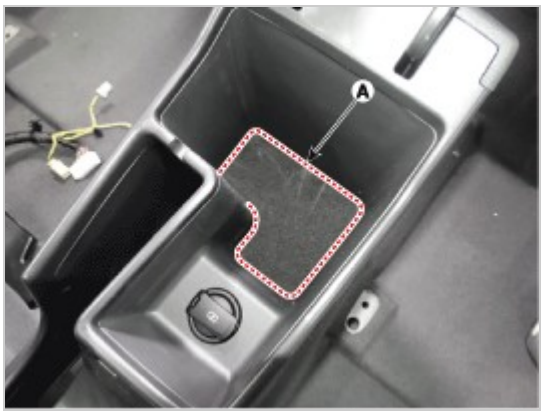

11. After loosening the mounting screws and bolts, remove the console rear complete assembly (A).

12. To install, reverse the removal procedure.

Information

- Make sure the connector is connected properly.
- Replace any damaged clips (or pin-type retainers).

Body (Interior and Exterior)

Component Location

1. Rear console cover

Replacement

CAUTION

- Put on gloves to prevent hand injuries.

NOTICE

- When removing with a flat-tip screwdriver or remover, wrap protective tape around the tools to prevent damage to components.
- Use a plastic panel removal tool to remove interior trim pieces without marring the surface.
- Take care not to bend or scratch the trim and panels.

1. Remove the floor console assembly.
   (Refer to Floor Console - "Floor Console Assembly")
2. Loosen the rear console mounting screws.

3. Using a screwdriver or remover, remove the rear console cover (A).

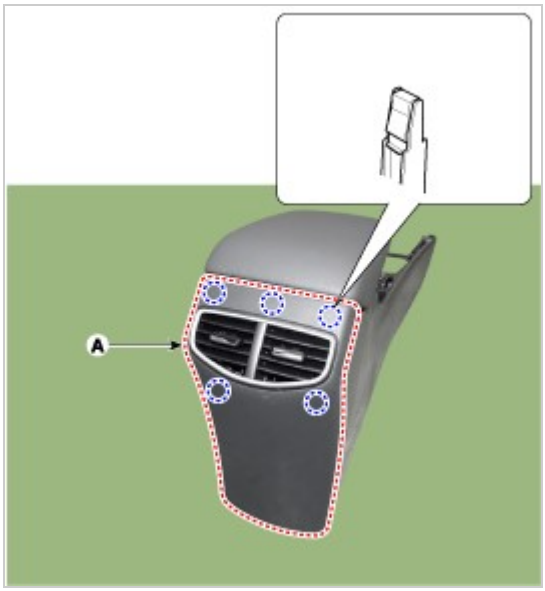

4. To install, reverse the removal procedure.

Information

- Make sure the connector is connected properly.
- Replace any damaged clips (or pin-type retainers).

Component Location

1. Console armrest

Replacement

CAUTION

- Put on gloves to prevent hand injuries.

NOTICE

- When removing with a flat-tip screwdriver or remover, wrap protective tape around the tools to prevent damage to components.
- Use a plastic panel removal tool to remove interior trim pieces without marring the surface.
- Take care not to bend or scratch the trim and panels.

1. Remove the floor console assembly.
   (Refer to Floor Console - "Floor Console Assembly")
2. Remove the rear console cover.
   (Refer to Floor Console - "Rear Console Cover")
3. Loosen the mounting screws and remove the console armrest (A).

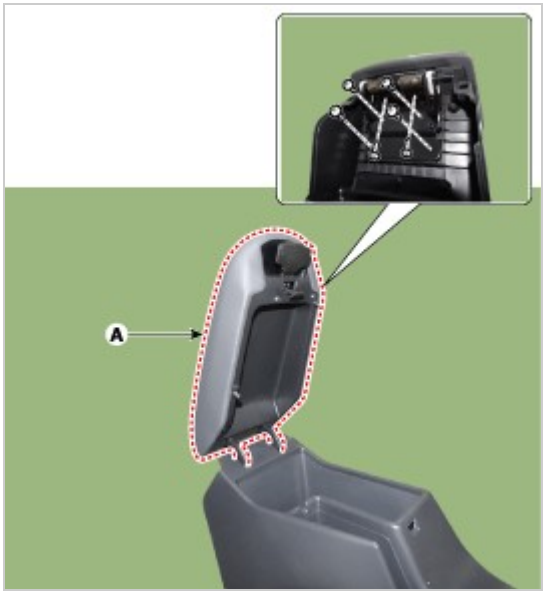

4. To install, reverse the removal procedure.

> **Information**
> • Replace any damaged clips (or pin-type retainers).

Body (Interior and Exterior)

Components

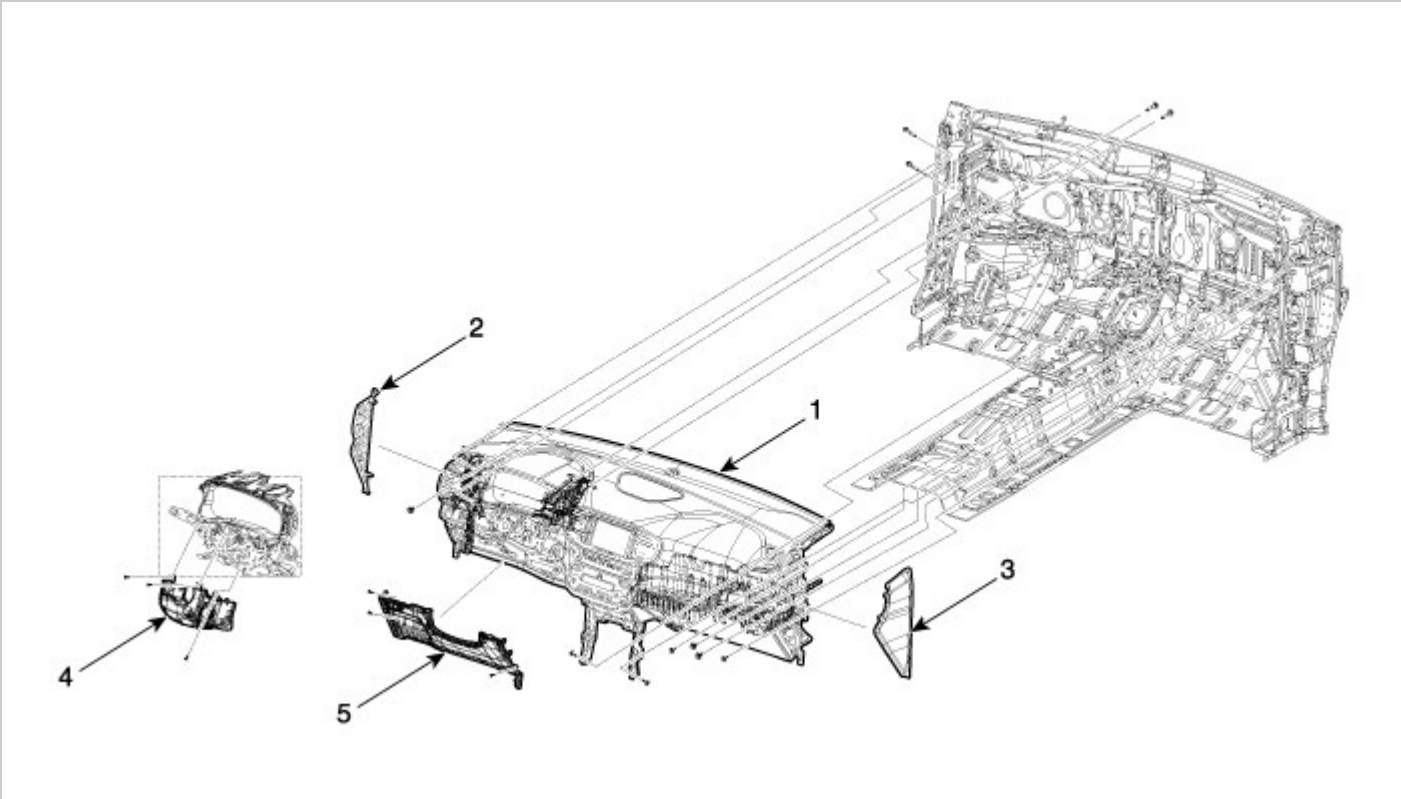

1. Crash pad assembly
2. Crash pad side cover [LH]
3. Crash pad side cover [RH]
4. Steering column shroud lower panel
5. Crash pad lower panel

Body (Interior and Exterior)

Component Location

1. Cluster fascia panel

Replacement

CAUTION

- Put on gloves to prevent hand injuries.

Information

- When removing with a flat-tip screwdriver or remover, wrap protective tape around the tools to prevent damage to components.
- Use a plastic panel removal tool to remove interior trim pieces without marring the surface.
- Take care not to bend or scratch the trim and panels.

1. Using a screwdriver or remover, remove the cluster fascia upper panel (A).

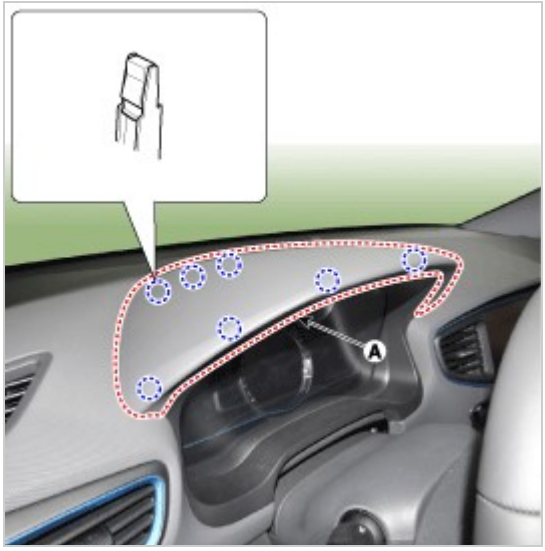

2. Loosen the mounting screws and remove the cluster fascia panel (A).

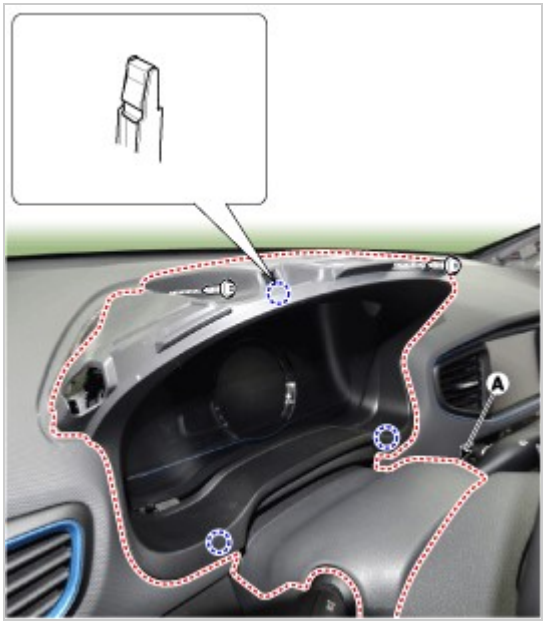

3. To install, reverse the removal procedure.

Information

- Make sure the connector are connected in properly.
- Replace any damaged clips (or pin-type retainers).

Components Location

1. Center fascia panel

Replacement

CAUTION

- Put on gloves to prevent hand injuries.

Information

- When removing with a flat-tip screwdriver or remover, wrap protective tape around the tools to prevent damage to components.
- Use a plastic panel removal tool to remove interior trim pieces without marring the surface.

1. Using a screwdriver or remover, remove the center fascia panel (A).

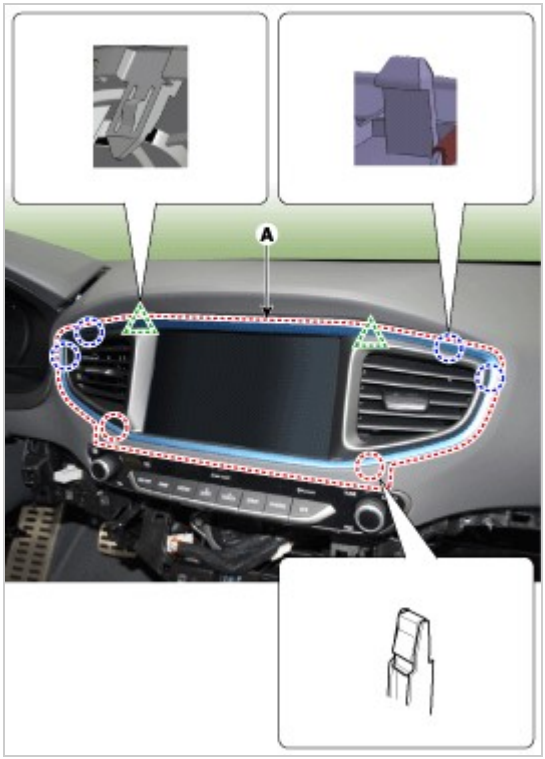

2. To install, reverse the removal procedure.

Information

- Replace any damaged clips (or pin-type retainers).

Body (Interior and Exterior)

Component Location

1. Crash pad lower panel

Replacement

CAUTION

- Put on gloves to prevent hand injuries.

Information

- When removing with a flat-tip screwdriver or remover, wrap protective tape around the tools to prevent damage to components.
- Use a plastic panel removal tool to remove interior trim pieces without marring the surface.
- Take care not to bend or scratch the trim and panels.

1. Using a screwdriver or remover, remove the crash pad side cover [LH] (A).

2. Loosen the mounting screws and remove the crash pad lower panel (A).

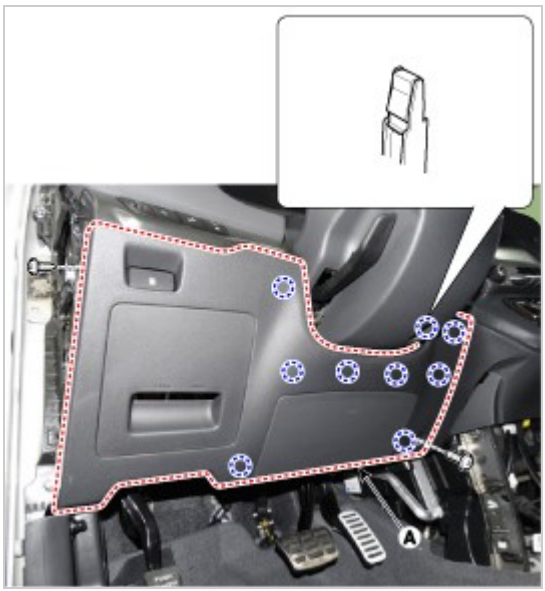

3. Disconnect the diagnosis connector (A) and airbag connector (B).

4. To install, reverse the removal procedure.

Information

- Make sure the connector are connected in properly.
- Replace any damaged clips (or pin-type retainers).

Body (Interior and Exterior)

Component Location

1. Steering column shroud lower panel
2. Steering column shroud upper panel

Replacement

[Steering column shroud lower panel]

CAUTION

- Put on gloves to prevent hand injuries.

Information

- When removing with a flat-tip screwdriver or remover, wrap protective tape around the tools to prevent damage to components.
- Use a plastic panel removal tool to remove interior trim pieces without marring the surface.
- Take care not to bend or scratch the trim and panels.

1. Remove the crash pad lower panel.
   (Refer to Crash Pad - "Crash Pad Lower Panel")
2. Loosen the mounting screws by turning the steering wheel to the left and right, and remove the steering column shroud lower panel (A).

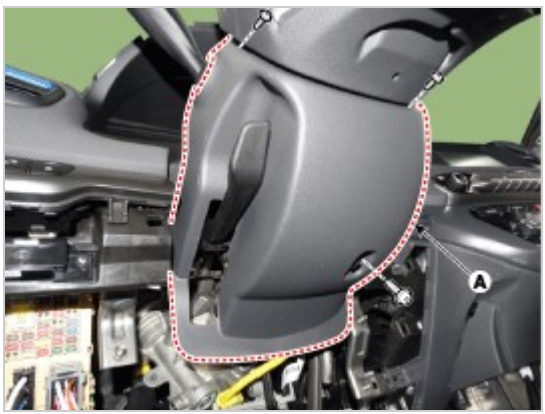

3. To install, reverse the removal procedure.

> **Information**
> - Replace any damaged clips (or pin-type retainers).

[Steering column shroud upper panel]

> **CAUTION**
> - Put on gloves to prevent hand injuries.

> **Information**
> - When removing with a flat-tip screwdriver or remover, wrap protective tape around the tools to prevent damage to components.
> - Use a plastic panel removal tool to remove interior trim pieces without marring the surface.
> - Take care not to bend or scratch the trim and panels.

1. Using a screwdriver or remover, remove the cluster fascia upper panel (A).

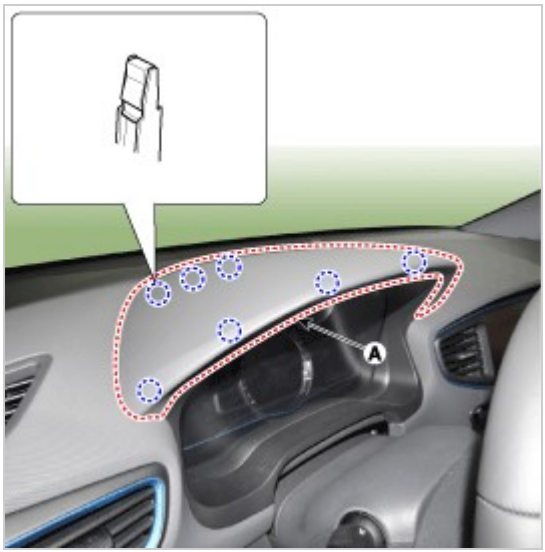

2. Loosen the mounting screws and remove the steering column shroud upper panel (A).

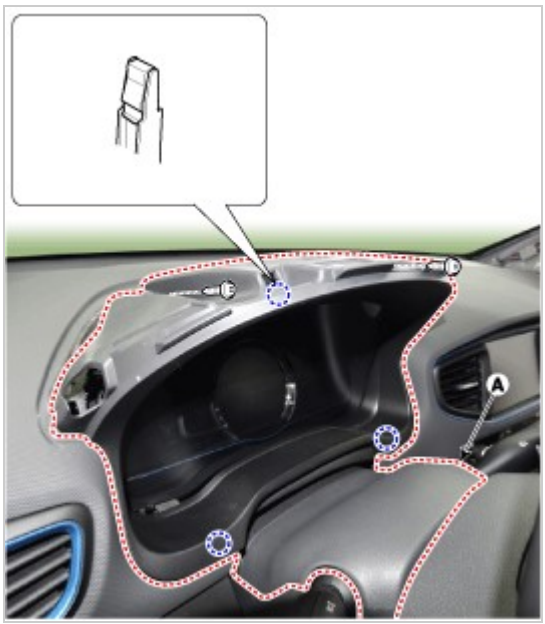

3. To install, reverse the removal procedure.

> **Information**
> - Replace any damaged clips (or pin-type retainers).

Body (Interior and Exterior)

Component Location

[LH]

1. Crash pad side cover [LH]

[RH]

1. Crash pad side cover [RH]

Replacement

CAUTION

- Put on gloves to prevent hand injuries.

Information

- When removing with a flat-tip screwdriver or remover, wrap protective tape around the tools to prevent damage to components.
- Use a plastic panel removal tool to remove interior trim pieces without marring the surface.
- Take care not to bend or scratch the trim and panels.

1. Using a screwdriver or remover, remove the crash pad side cover (A).
   [LH]

[RH]

2. To install, reverse the removal procedure.

Information

- Replace any damaged clips (or pin-type retainers).

Body (Interior and Exterior)

Replacement

CAUTION

- Put on gloves to prevent hand injuries.

NOTICE

- When removing with a flat-tip screwdriver or remover, wrap protective tape around the tools to prevent damage to components.
- Use a plastic panel removal tool to remove interior trim pieces without marring the surface.
- Take care not to bend or scratch the trim and panels.

1. Using a screwdriver or remover, remove the crash pad under cover [RH] (A).

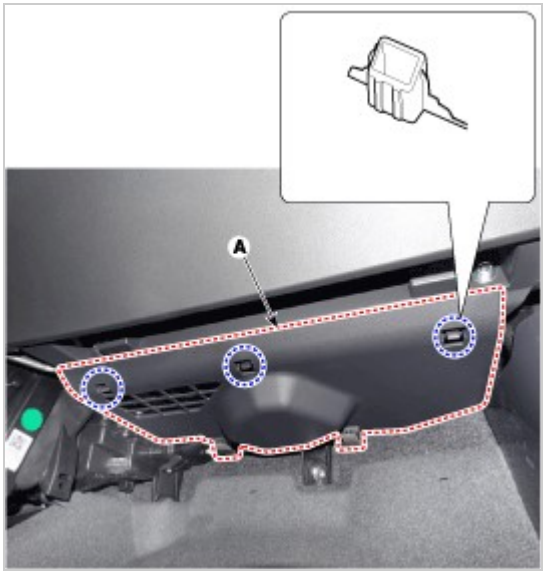

2. To install, reverse the removal procedure.

Information

- Replace any damaged clips (or pin-type retainers).

Body (Interior and Exterior)

Component Location

1. Glove box upper cover assembly

Replacement

CAUTION

- Put on gloves to prevent hand injuries.

Information

- When removing with a flat-tip screwdriver or remover, wrap protective tape around the tools to prevent damage to components.
- Use a plastic panel removal tool to remove interior trim pieces without marring the surface.
- Take care not to bend or scratch the trim and panels.

1. Remove the cowl side trim.
   (Refer to Interior Trim - "Cowl Side Trim")
2. Remove both stoppers (B) from the glove box (A) by turning the stoppers.

3. Separate the air damper from the glove box (A).

4. Disconnect the pushpins (A) and then remove the glove box (B).

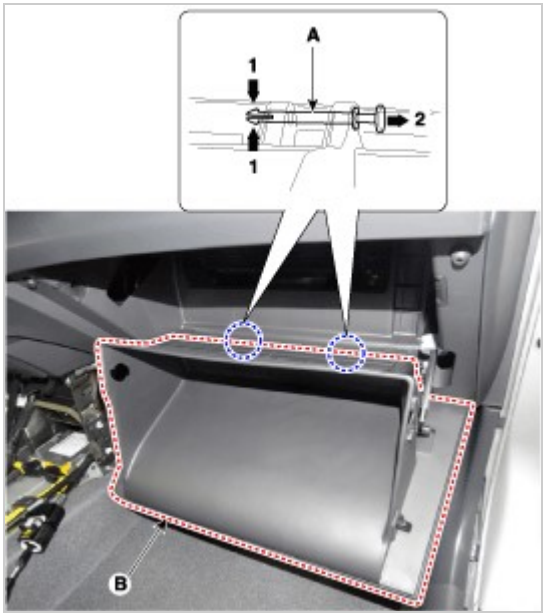

5. Using a screwdriver or remover, remove the crash pad side cover [RH] (A).

6. Using a screwdriver or remover, remove the crash pad under cover [RH] (A).

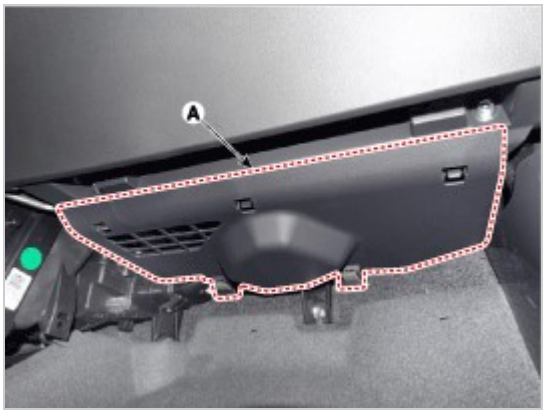

7. Loosen the mounting screws and remove the crash pad side garnish [RH] (A).

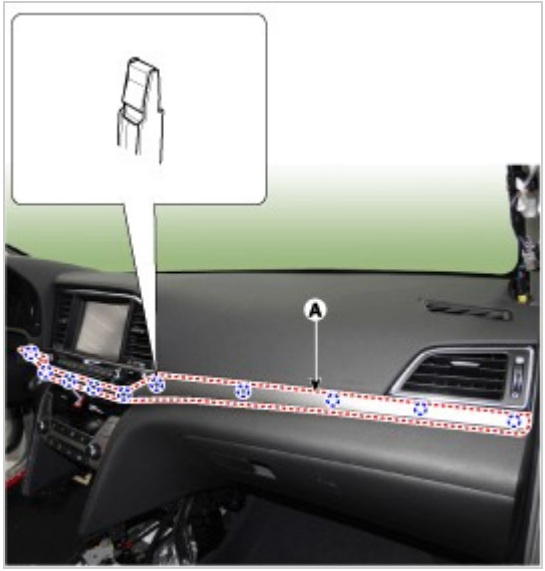

8. Disconnect the start button connetor (A).

9. After loosening the mounting screws and nuts, remove the glove box upper cover assembly (A).

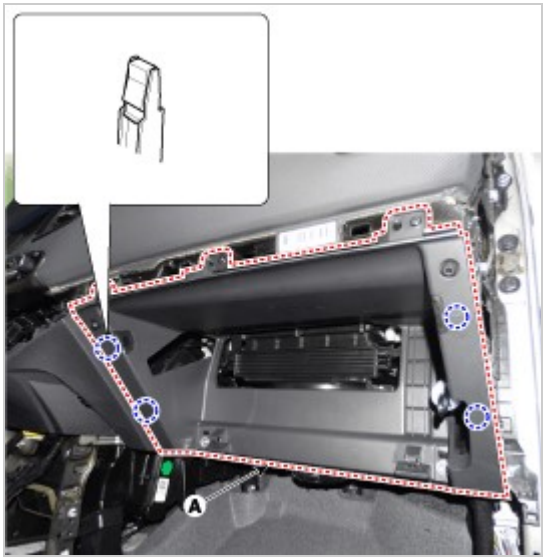

10. To install, reverse the removal procedure.

Information

- Make sure the connector are connected in properly.
- Replace any damaged clips (or pin-type retainers).

Body (Interior and Exterior)

Component Location

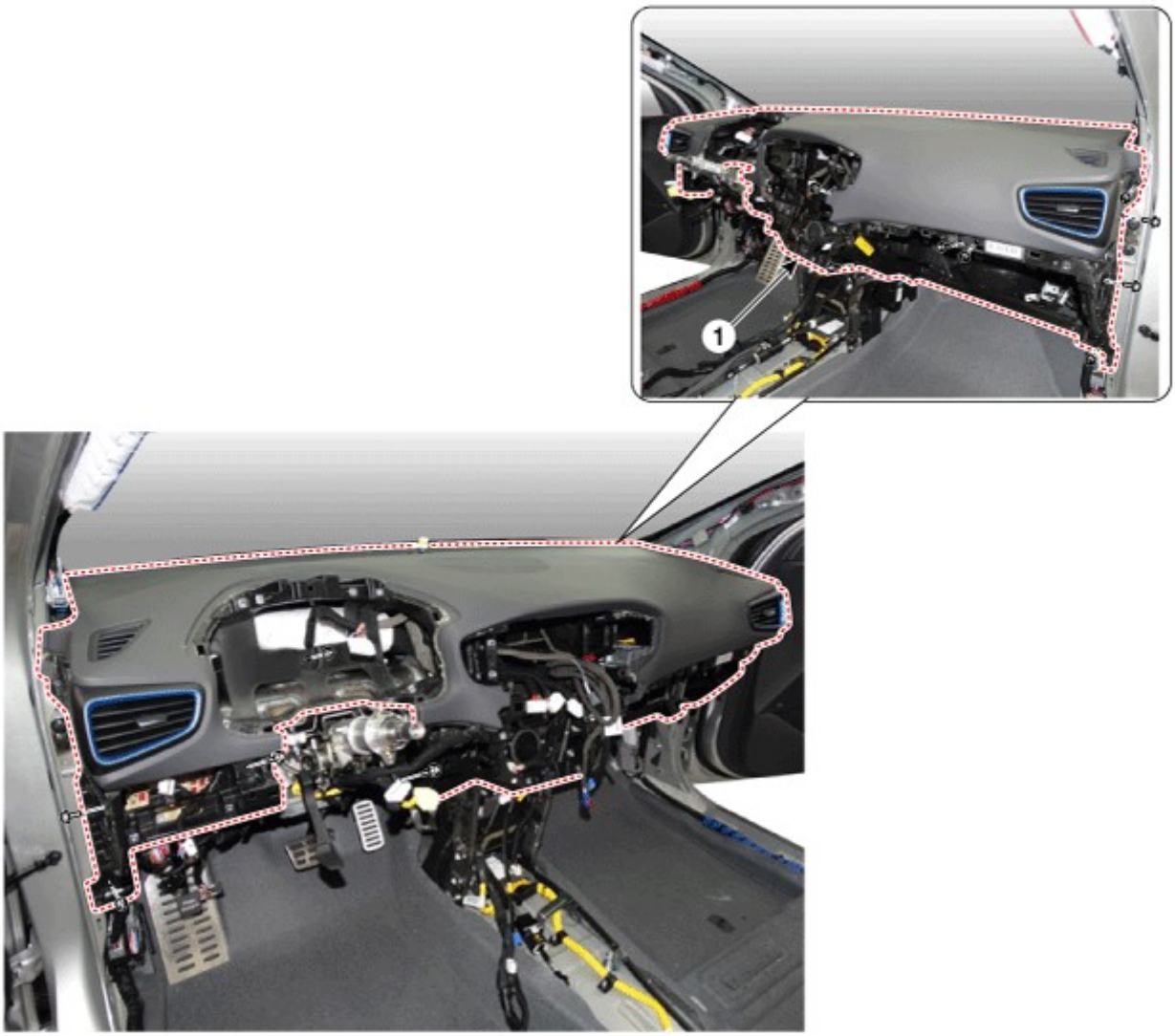

1. Main crash pad assembly

Replacement

CAUTION

- Put on gloves to prevent hand injuries.

Information

- When removing with a flat-tip screwdriver or remover, wrap protective tape around the tools to prevent damage to components.
- Use a plastic panel removal tool to remove interior trim pieces without marring the surface.
- Take care not to bend or scratch the trim and panels.

1. Disconnect the negative (-) battery terminal.
2. Remove the front pillar trim
   (Refer to Interior Trim - "Front Pillar Trim")
3. Remove the floor console assembly.
   (Refer to Floor Console - "Floor Console Assembly")
4. Remove the crash pad lower panel.
   (Refer to Crash Pad - "Crash Pad Lower Panel")
5. Remove the cluster fascia panel.
   (Refer to Cluster Pad - "Center Fascia Panel")
6. Remove the center fascia panel.

(Refer to Crash Pad - "Center Fascia Panel")

7. Remove the AVN head unit.
   (Refer to Body Electrical System - "AVN Head Unit")
8. Remove the glove box upper cover assembly.
   (Refer to Crash Pad - "Crash Pad Center Panel")
9. Remove the steering wheel.
   (Refer to Steering System - "Steering Wheel")
10. Remove the steering column shroud lower panel.
    (Refer to Crash Pad - "Steering Column Shroud Panel")
11. Remove the multifunction switch assembly.
    (Refer to Body Electrical System - "Multifunction Switch")
12. Remove the instrument cluster.
    (Refer to Body Electrical System - "Instrument Cluster")
13. Disconnect the security lamp connector (A).

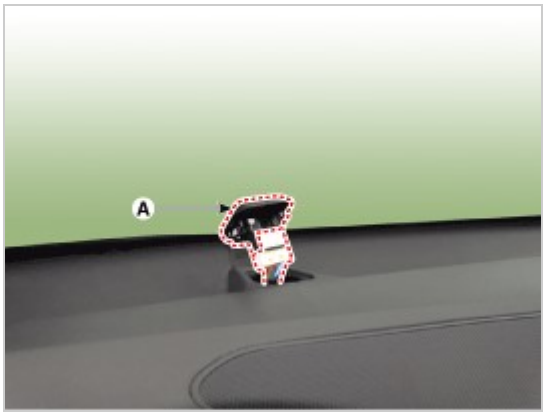

14. After loosening the mounting bolts and nuts, remove the A/C & heater controller unit (A).

15. Disconnect the A/C & heater controller connectors (A).

16. Loosen the mounting screws and remove the crash pad side garnish assembly [LH] (A).

17. Disconnect the crash pad side garnish connector (A).

18. Loosen the mounting screws and remove the fuel panel assembly (A).

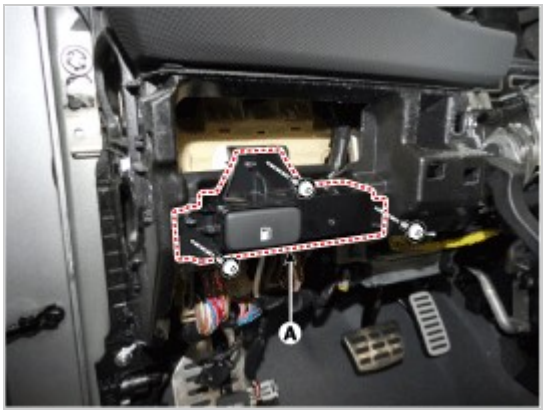

19. Disconnect the fuel switch connector (A).

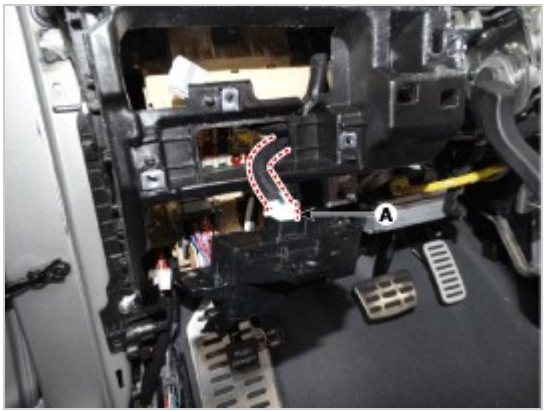

20. Loosen the mounting bolts (A).

21. Loosen the mounting bolts and nuts and remove the main crash pad assembly (A).

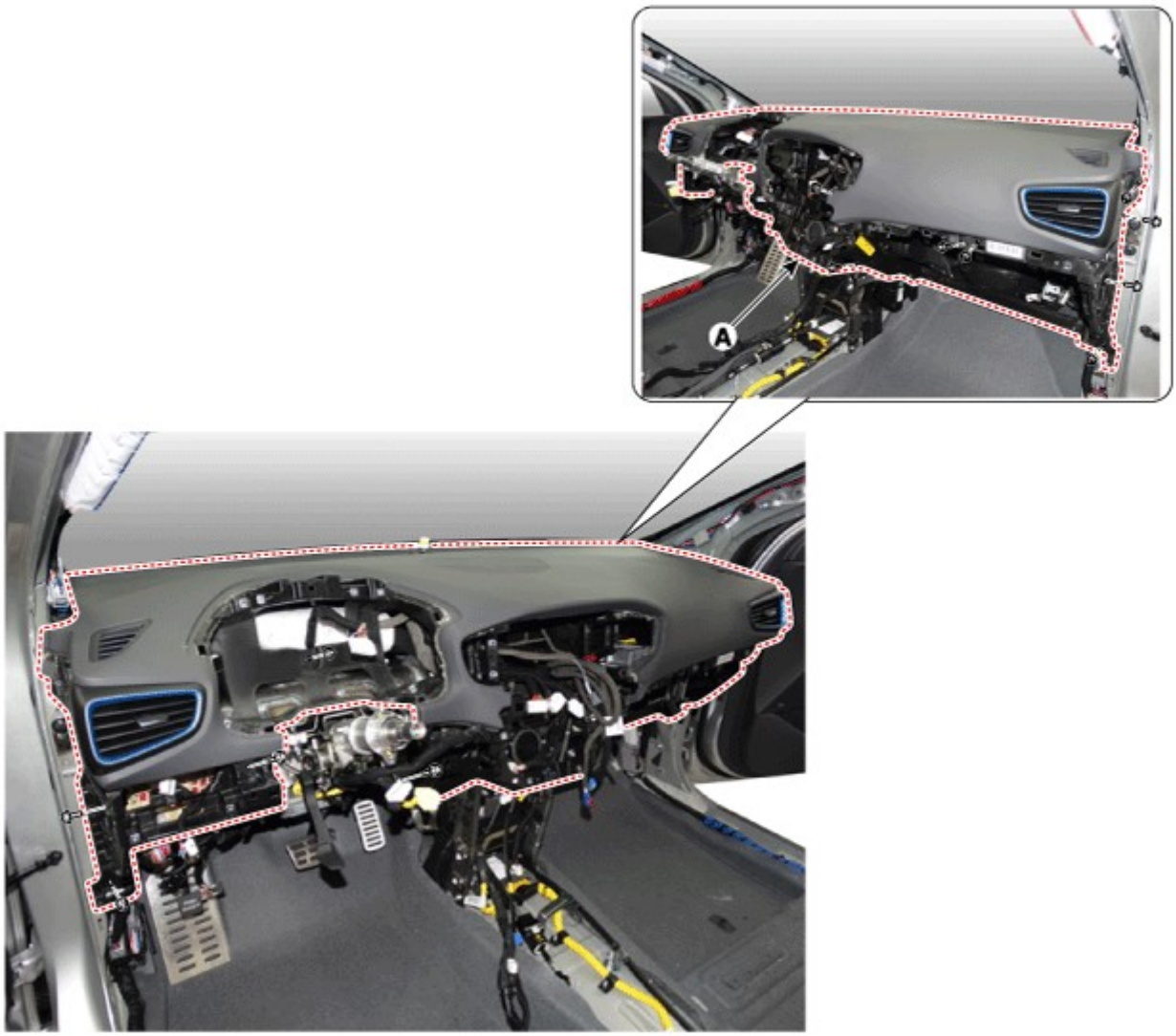

22. Disconnect the passenger"s airbag connectors (A).

23. To install, reverse the removal procedure.

Information

- Make sure the crash pad fits onto the guide pins correctly.
- Before tightening the bolts, make sure the crash pad wire harnesses are not pinched.
- Make sure the connectors are plugged in properly, and the antenna lead is connected properly.
- Make sure that each of the assembly components operates properly.
- Replace any damaged clips (or pin-type retainers).

Body (Interior and Exterior)

Component Location

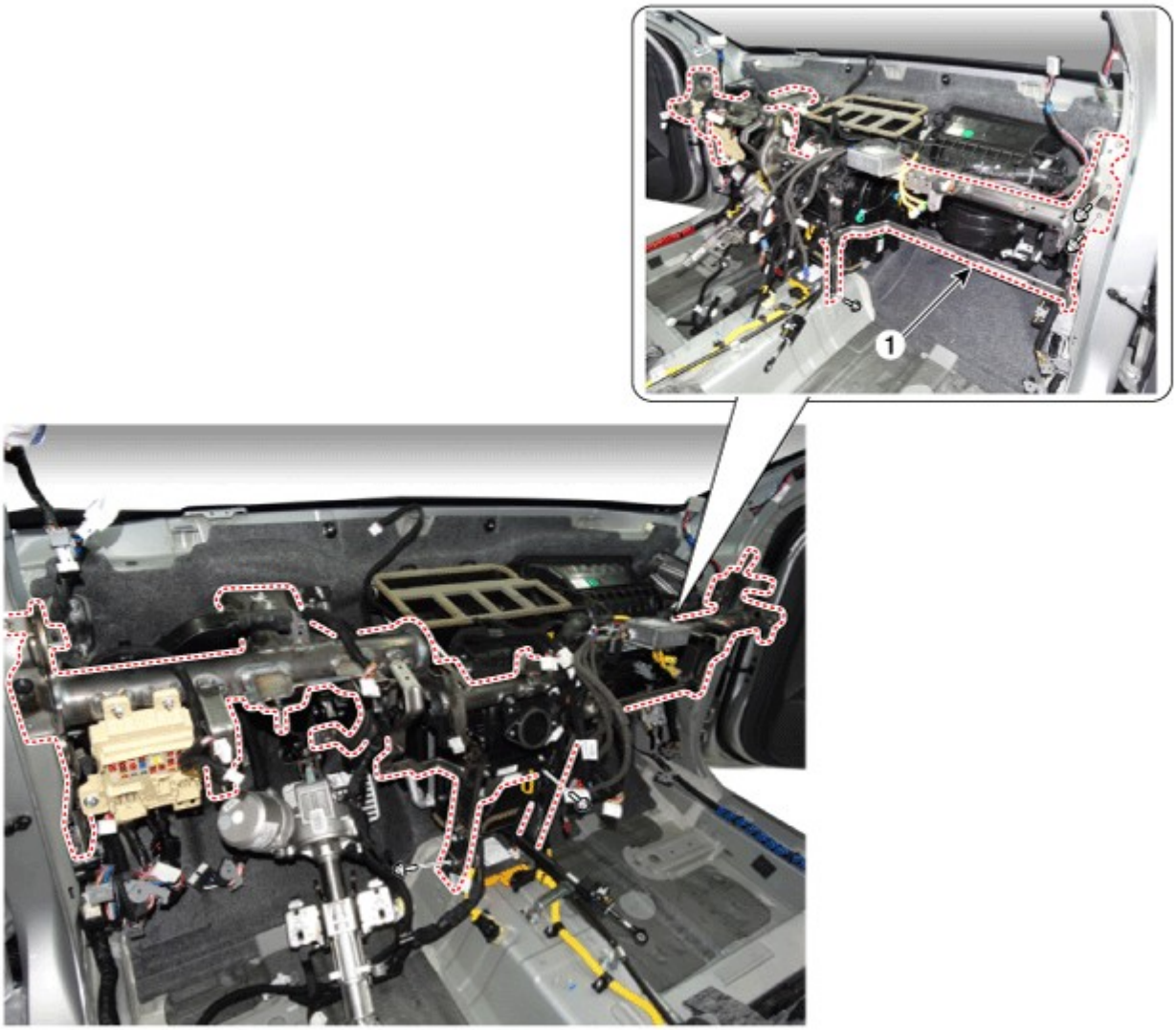

1. Cowl cross bar assembly

Body (Interior and Exterior)

Replacement

CAUTION

- Put on gloves to prevent hand injuries.

Information

- When removing with a flat-tip screwdriver or remover, wrap protective tape around the tools to prevent damage to components.
- Use a plastic panel removal tool to remove interior trim pieces without marring the surface.

- Take care not to bend or scratch the trim and panels.

1. Disconnect the negative (-) battery terminal.
2. Recover the refrigerant with a recovery/recycling/charging station.
3. Remove the cowl top cover.
   (Refer to "Cowl Top Cover")
4. Remove the main crash pad assembly.
   (Refer to Crash Pad - "Main Crash Pad Assembly")
5. Disconnect the steering column connectors.
   (Refer to Steering System - "Steering Column and Shaft")
6. Loosen the mounting nuts and through bolts in the frontal area and lower the steering column.
   (Refer to Steering System - "Steering Column and Shaft")
7. Disconnect the expansion valve from the evaporator core.
   (Refer to Heating,Ventilation And Air Conditioning - "Heater Unit")
8. Disconnect the inlet and outlet heater hoses from the heater unit.
   (Refer to Heating,Ventilation And Air Conditioning - "Heater Unit")
9. Remove both sides of front seat assembly.
   (Refer to Front Seat - "Front Seat Assembly")
10. Remove the main crash pad assembly.
    (Refer to Crash Pad - "Main Crash Pad Assembly")
11. Remove the shift lever assembly.
    (Refer to DCT - "Shift lever")
12. Loosen the cowl cross member mounting bolts.

    Tightening torque :
    16.7 - 25.5 N.m (1.7 - 2.6 kgf.m, 12.3 - 18.8 lb-ft)

13. Loosen the mounting nut and remove the center console duct (A).

14. Disconnect the airbag control module (SRSCM) connector (A).

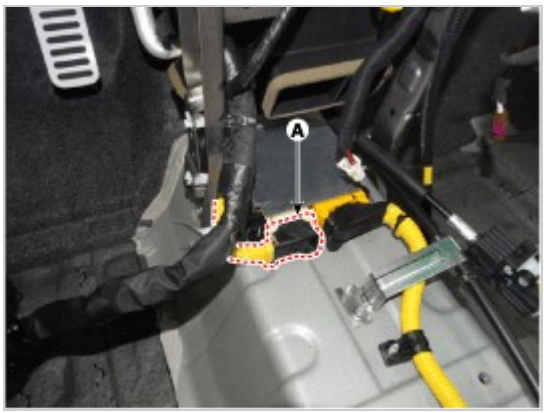

15. Remove the rear air duct (A)

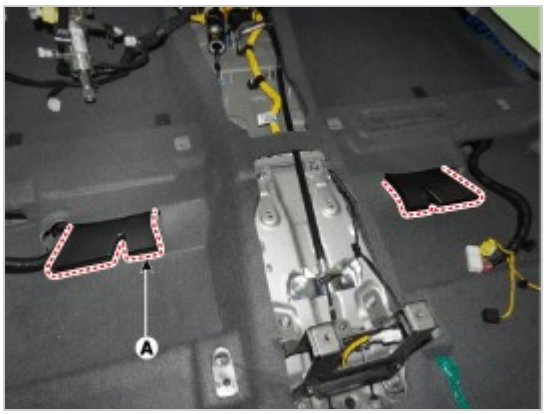

16. Separate the floor carpet (A) to obtain space for removing the rear heating duct.

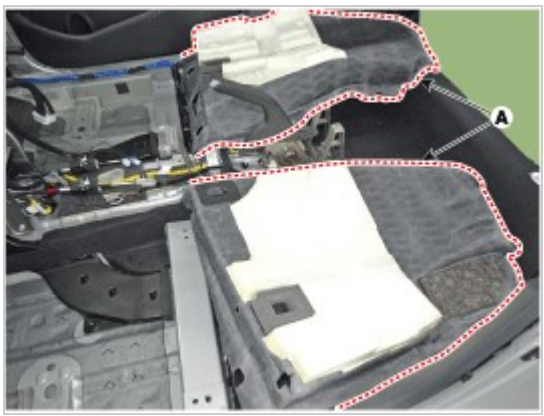

17. Loosen the mounting nuts and remove the front air duct (A).

18. Disconnect the connector (A) and the mounting wiring fasteners in the front pillar.
    [Driver"s]

[Passenger"s]

19. Disconnect the passenger compartment junction box connectors (A).

20. Disconnect the multi box connectors (A).
    [Driver"s]

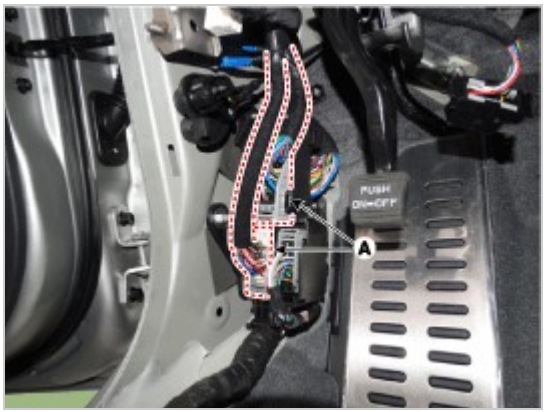

[Passenger"s]

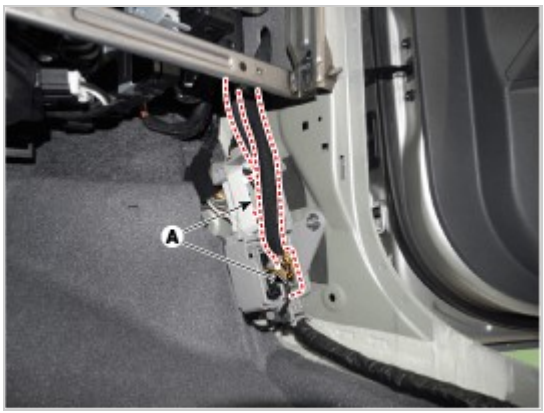

21. Disconnect the heater and blower unit connector.

[Driver"s]

(1) Disconnect the mode actuator (A) and temperature actuator (B).

[Passenger"s]

(1) Disconnect the temperature actuator (A), evaporator temperature sensor (B) and mode actuator (C).

(2) Disconnect the auto defogging actuator (A) and intake actuator connector (B).

(3) Disconnect the blower motor connector (A).

22. After loosening the bolts and nuts, remove the cowl cross bar assembly (A).

Tightening torque :
16.7 - 25.5 N.m (1.7 - 2.6 kgf.m, 12.3 - 18.8 lb-ft)

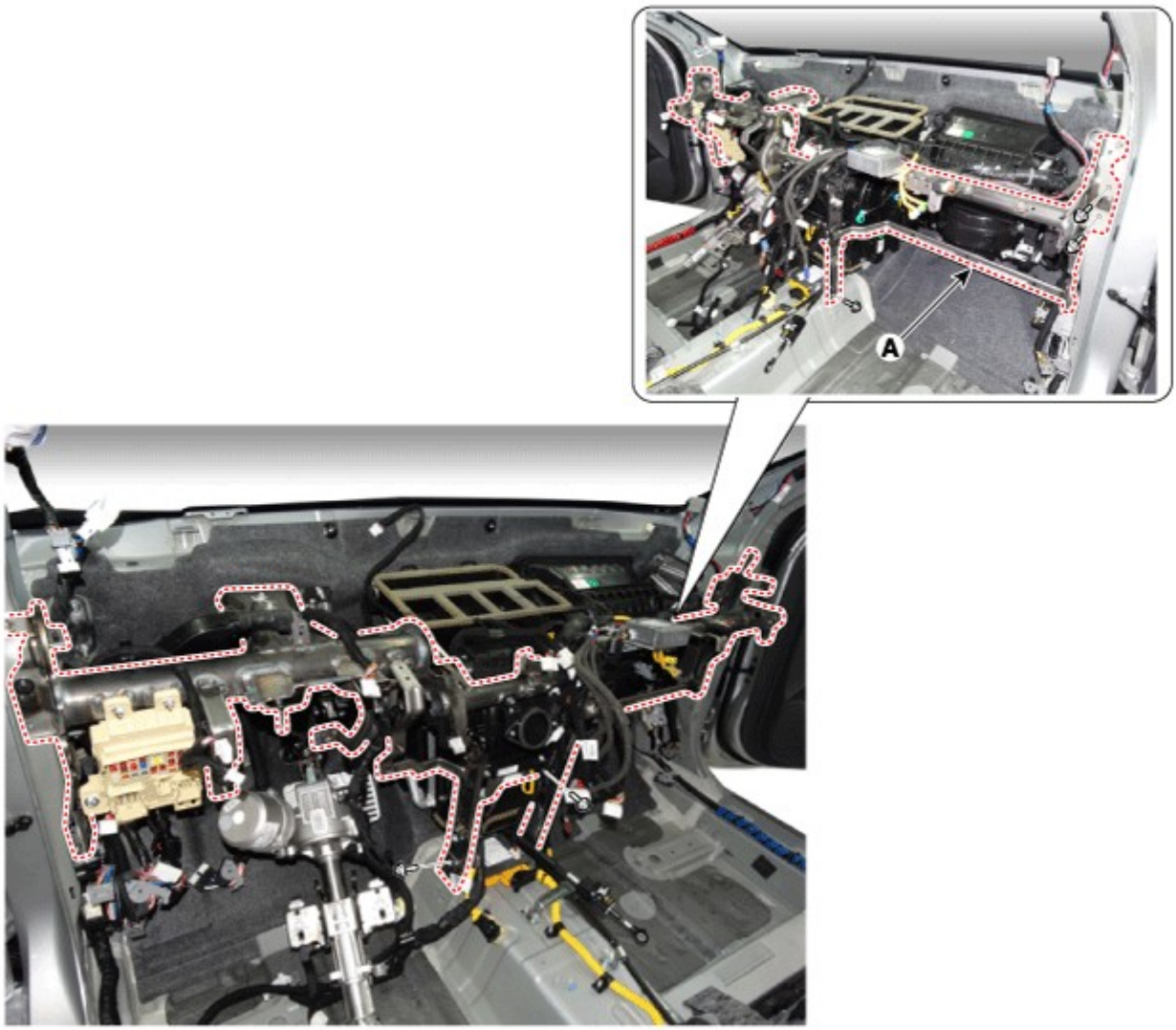

23. To install, reverse the removal procedure.

Information

- Make sure the crash pad fits onto the guide pins correctly.
- Before tightening the bolts, make sure the crash pad wire harnesses are not pinched.
- Make sure the connectors are plugged in properly, and the antenna lead is connected properly.
- Enter the anti- theft code for the radio, then enter the customer`s radio station presets.
- Make sure that each of the assembly components operates properly.
- Replace any damaged clips (or pin-type retainers).

Body (Interior and Exterior)

Components (1)

[General Type]

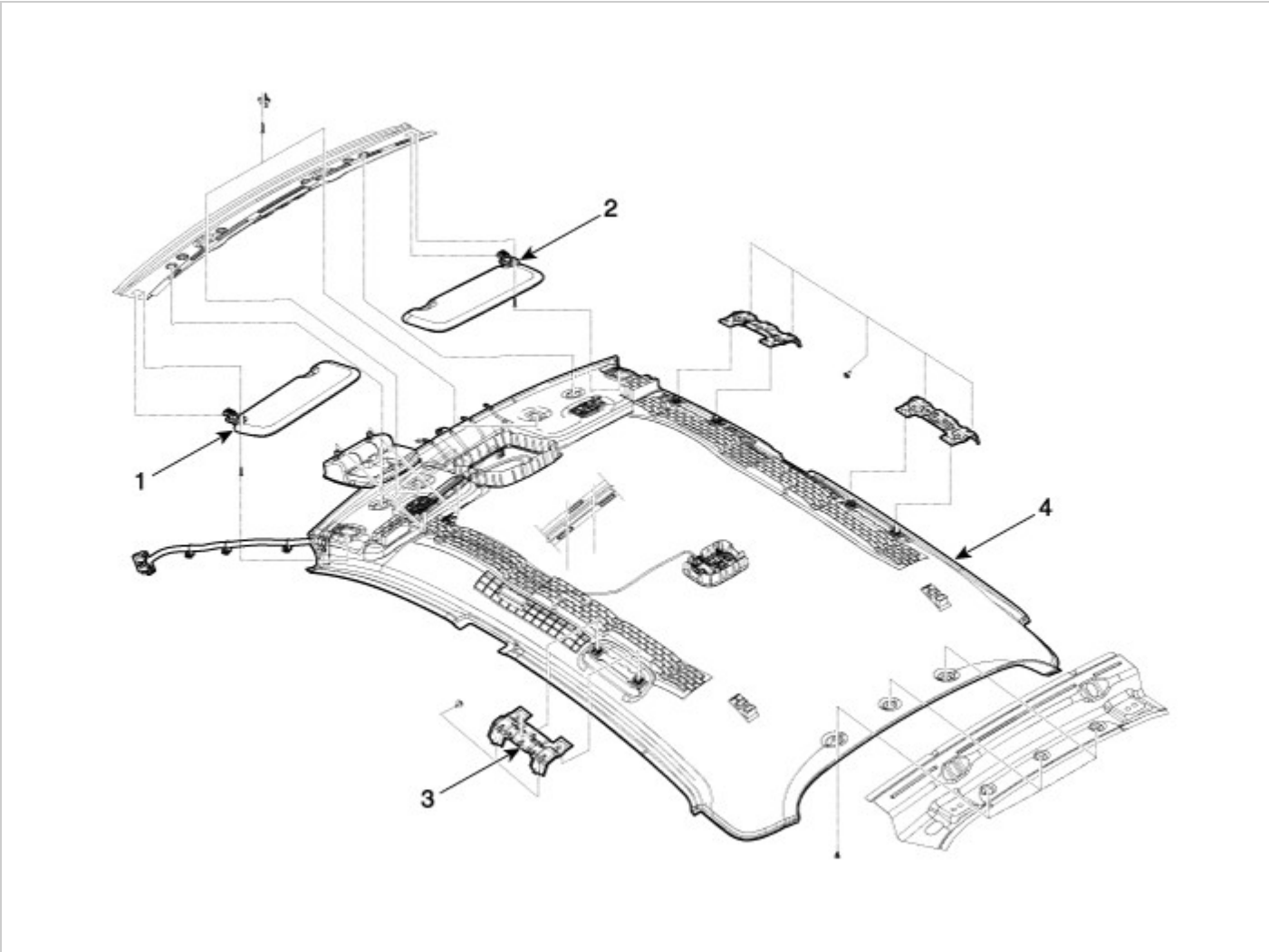

1. Sunvisor [LH]
2. Sunvisor [RH]
3. Assist handle
4. Roof trim

Components (2)

[Sunroof Type]

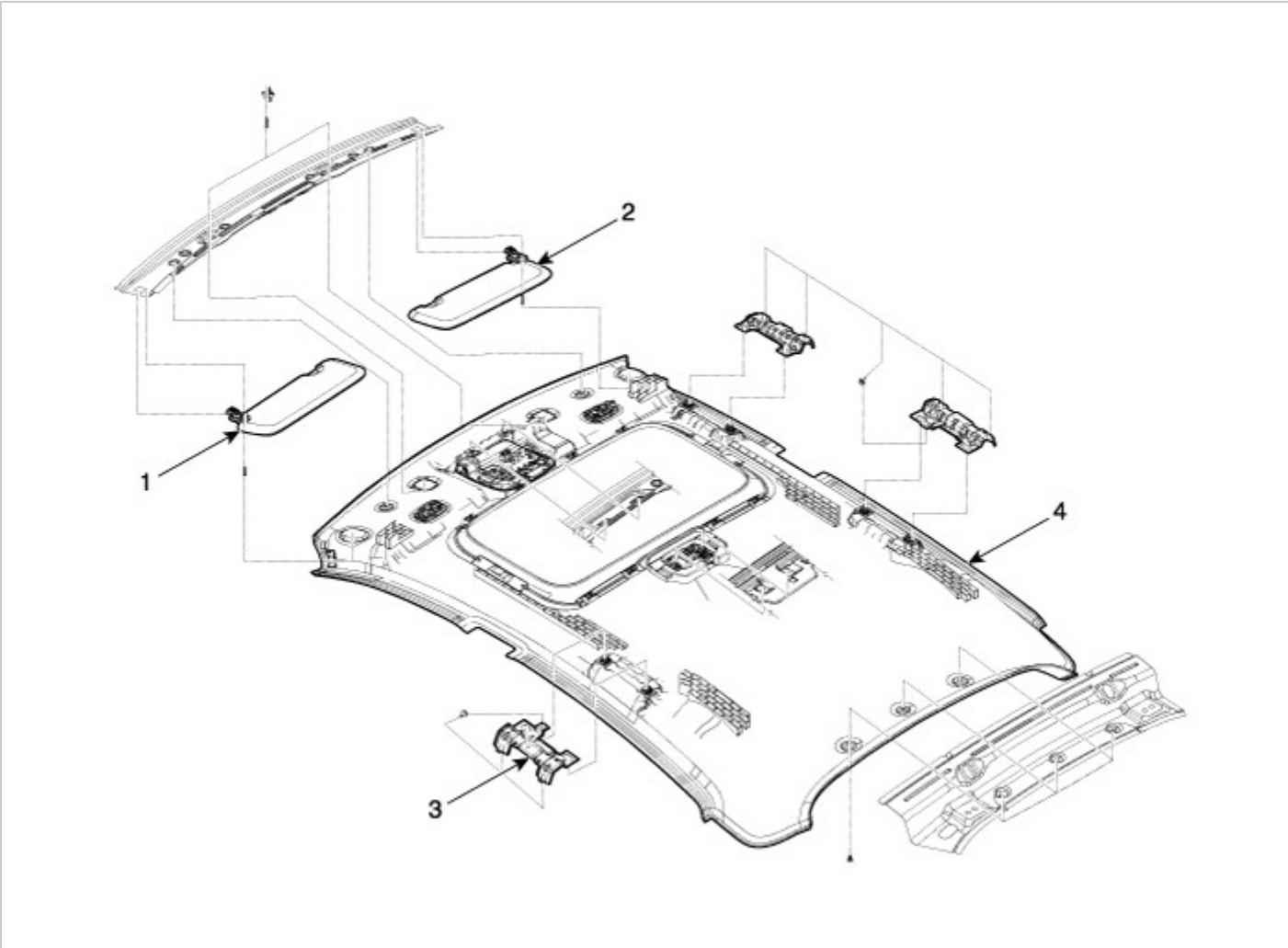

1. Sunvisor [LH]
2. Sunvisor [RH]
3. Assist handle
4. Roof trim

Component Location

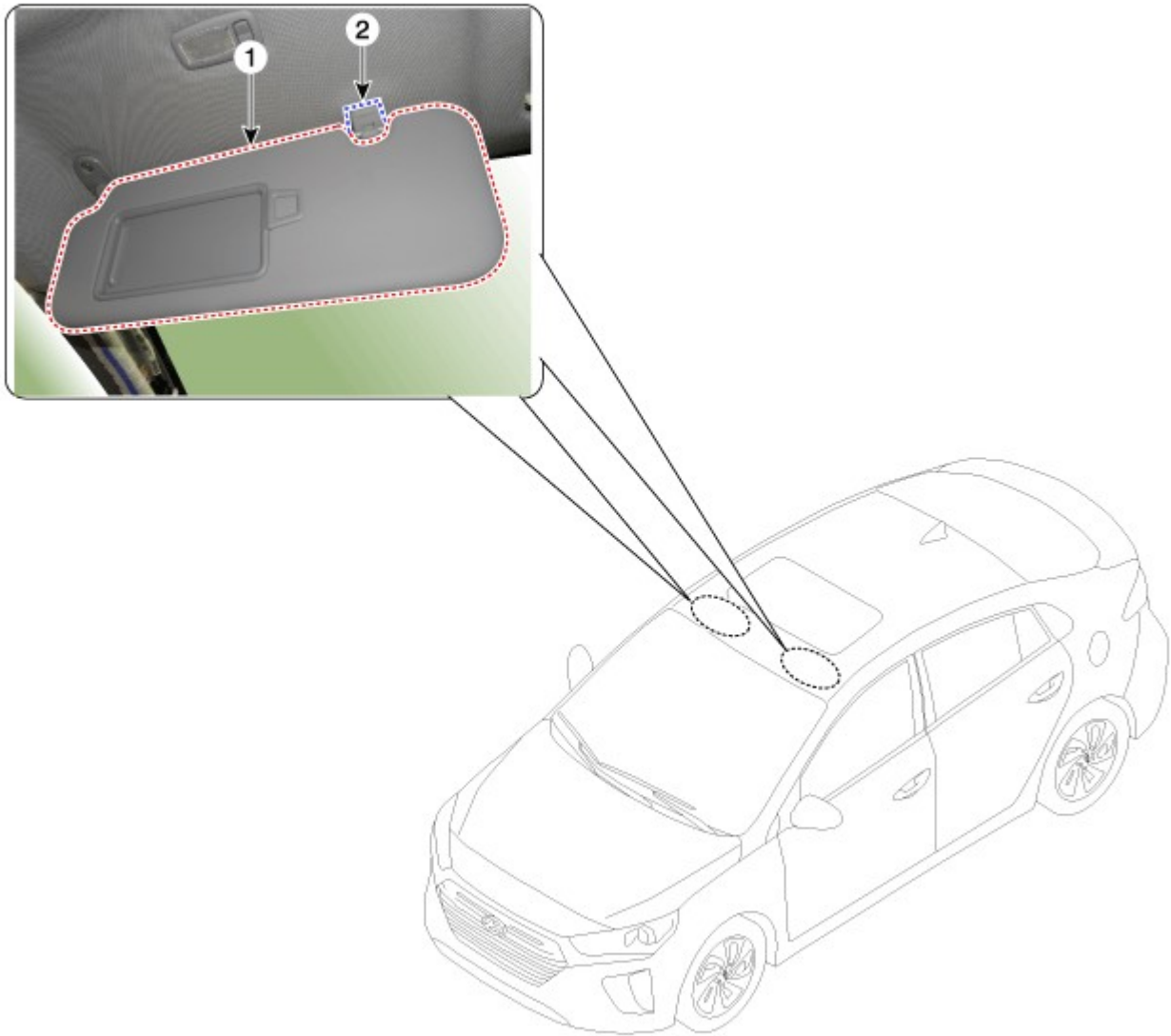

1. Sunvisor
2. Retainer

Replacement

CAUTION

- Put on gloves to prevent hand injuries.

NOTICE

- When removing with a flat-tip screwdriver or remover, wrap protective tape around the tools to prevent damage to components.
- When removing the interior trim pieces, use a plastic panel removal tool not to damage the surface.
- Take care not to bend or scratch the trim and panels.

1. Loosen the mounting screw and seperate the sunvisor (A).

2. Loosen the mounting screws and remove the retainer (A).

3. To install, reverse the removal procedure.

Information

- Replace any damaged clips (or pin-type retainers).

Component Location

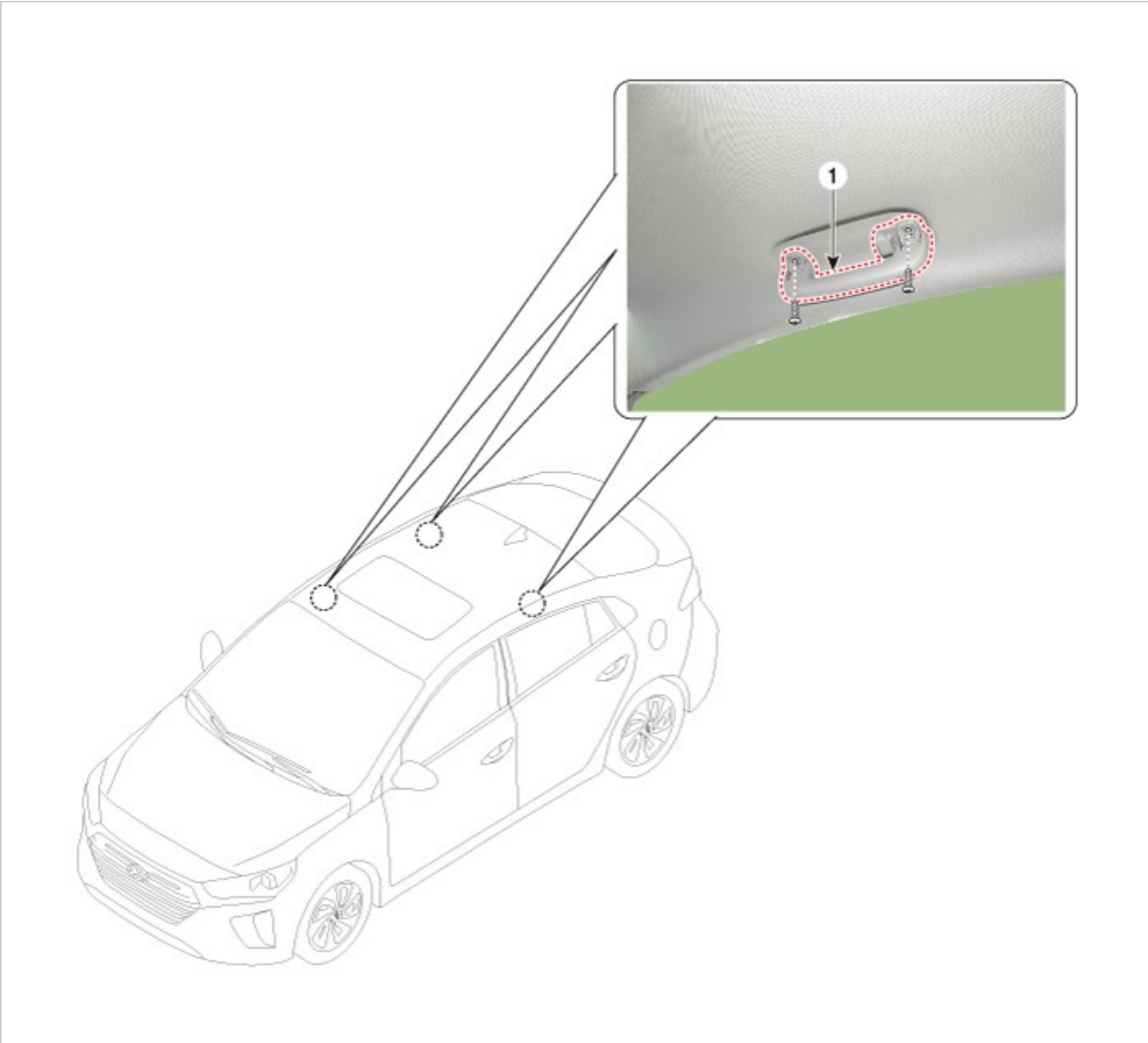

1. Assist handle

Replacement

CAUTION

- Put on gloves to prevent hand injuries.

Information

- When removing with a flat-tip screwdriver or remover, wrap protective tape around the tools to prevent damage to components.
- When removing the interior trim pieces, use a plastic panel removal tool not to damage the surface.
- Take care not to bend or scratch the trim and panels.

1. After lifting up the assist handle caps and loosening the mounting screws, remove the assist handle (A).

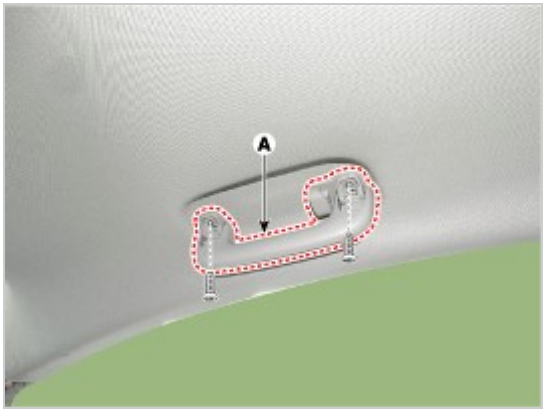

2. To install, reverse the removal procedure.

Body (Interior and Exterior)

Component Location

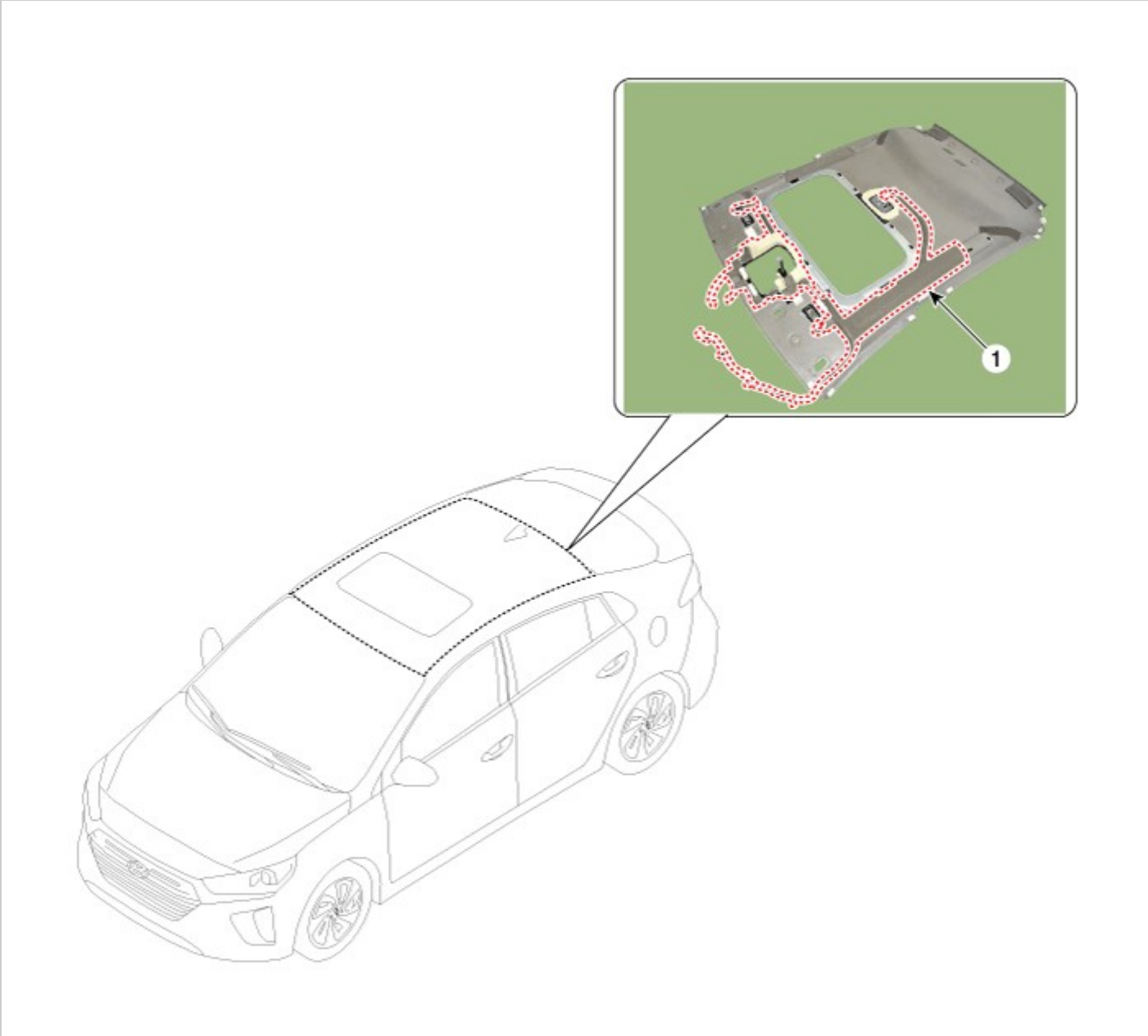

1. Roof Trim Assembly

Body (Interior and Exterior)

Replacement

CAUTION

- Put on gloves to prevent hand injuries.

NOTICE

- When removing with a flat-tip screwdriver or remover, wrap protective tape around the tools to prevent damage to components.
- When removing the interior trim pieces, use a plastic panel removal tool not to damage the surface.
- Take care not to bend or scratch the trim and panels.

1. Remove the front seat.
   (Refer to Front Seat - "Front Seat Assembly")
2. Remove the rear seat.
   (Refer to Rear Seat - "Rear Seat Assembly")
3. Remove the front pillar trim.
   (Rear to Interior Trim - "Front Pillar Trim")
4. Remove the canter pillar lower trim.
   (Rear to Interior Trim - "Center Pillar Trim")
5. Remove the canter pillar upper trim.
   (Rear to Interior Trim - "Center Pillar Trim")
6. Remove the rear pillar trim.
   (Rear to Interior Trim - "Rear Pillar Trim")
7. Remove the sunvisor and retainer.
   (Rear to Roof Trim - "Sunvisor")
8. Remove the assist handle.
   (Rear to Roof Trim - "Assist Handle")
9. Remove the overhead console lamp.
   (Rear to Body Electrical System - "Overhead Console Lamp")
10. Remove the room lamp.
    (Rear to Body Electrical System - "Room Lamp")
11. Disconnect the ECM mirror connector.
    (Refer to Body Electrical System - "Electro Chromic Inside Rear View Mirror")
12. Disconnect the rain sensor connector.
    (Refer to Body Electrical System - "Rain Sensor")
13. Disconnect the roof trim main connector (A) and the mounting clips in the front pillar.

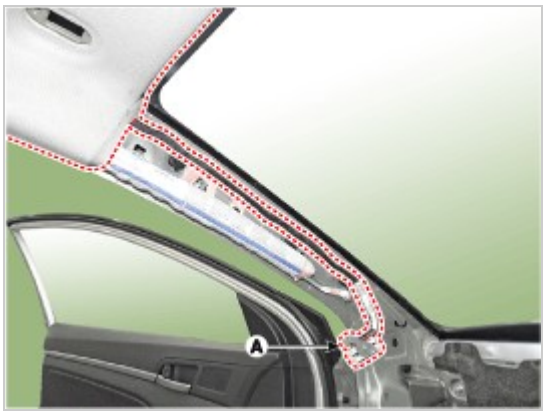

14. Disconnect the sunroof motor connector (A).

15. Remove the roof trim mounting clip and remove the roof trim assembly (A).

CAUTION

- Be careful not to wrinkle on the roof trim.

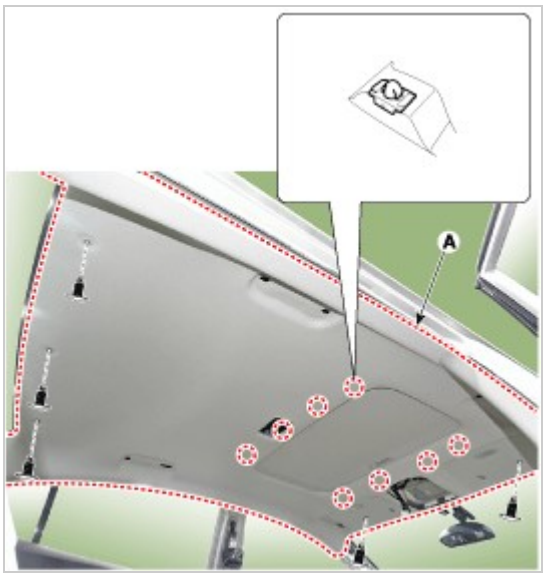

16. Remove the roof trim assembly (A) from the body panel and then carry it out of the vehicle through the rear door.

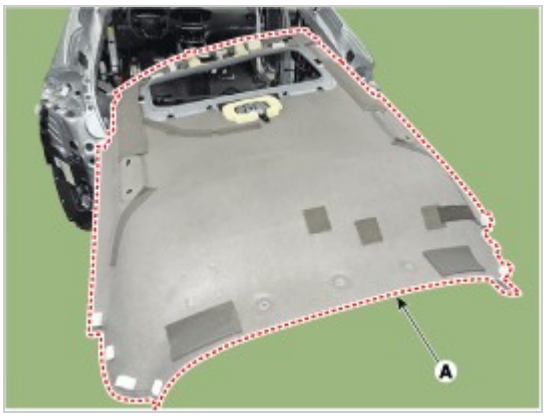

17. Remove the vanity lamp.
    (Refer to Body Electrical - "Vanity Lamp")
18. Remove roof trim wiring harness (A) from the roof trim (B).

NOTICE

- Take care not to damage the roof trim wiring harness (A) when removing.

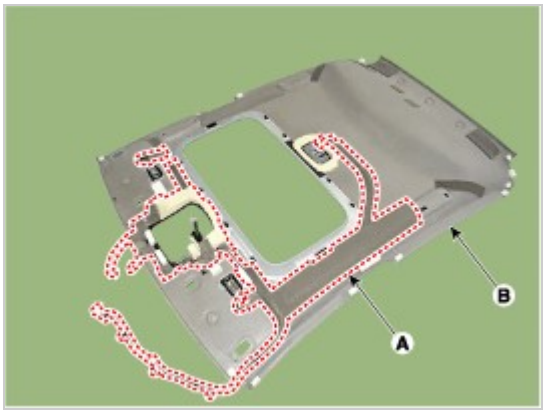

Information

1) When installing the roof trim wiring harness (A) on the roof trim (B), apply the hot melt continuously by using the hot melt gun tool.
2) Put anti-noise pad on roof trim (B) to prevent the noise.

19. To install, reverse the removal procedure.

Information

- Make sure the connector is connected in properly.
- Replace any damaged clips.

Components

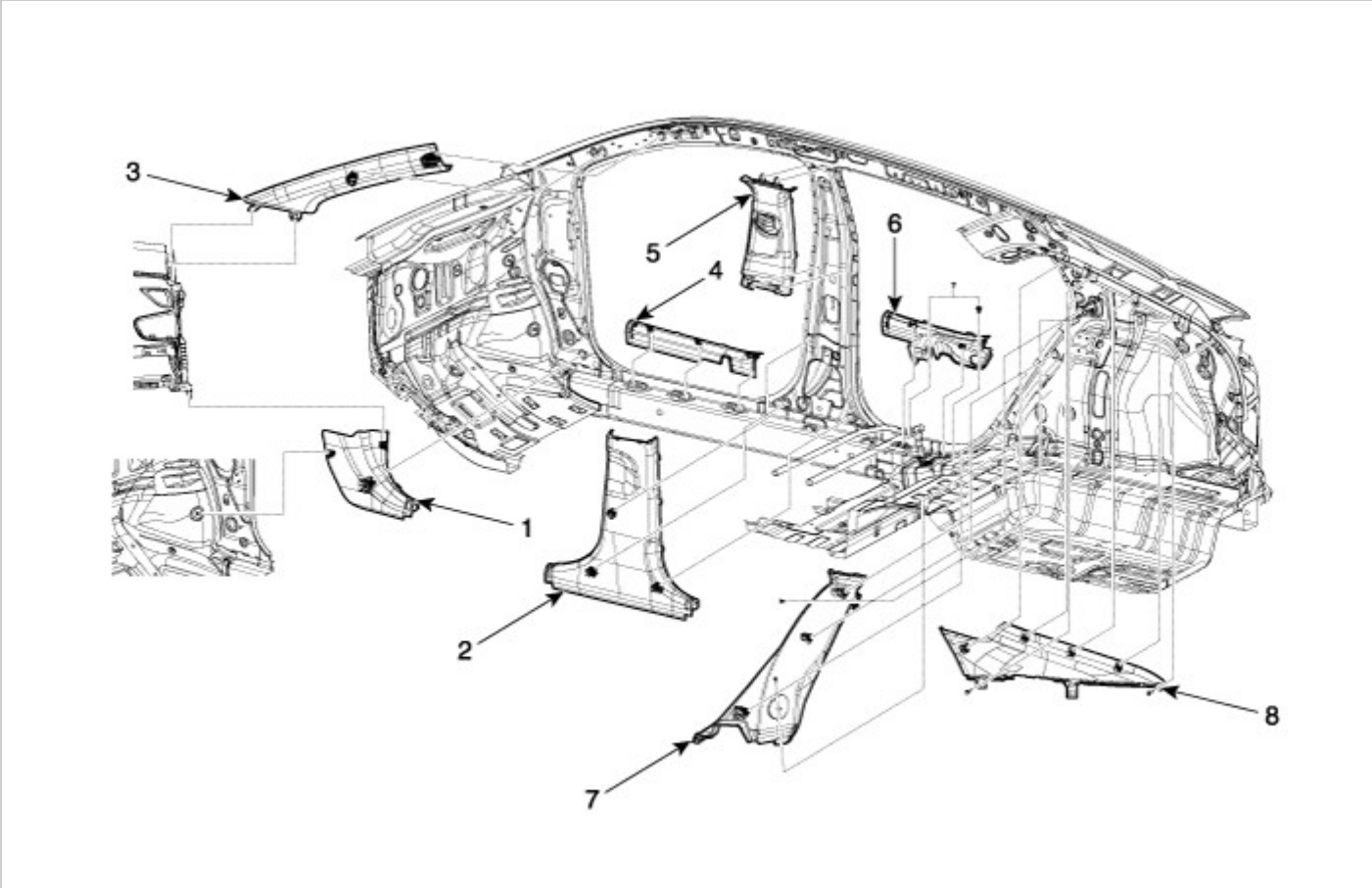

1. Cowl side trim
2. Center pillar lower trim
3. Front pillar trim
4. Front door scuff trim
5. Center pillar upper trim
6. Rear door scuff trim
7. Rear wheel house trim
8. Rear pillar trim

Component Location

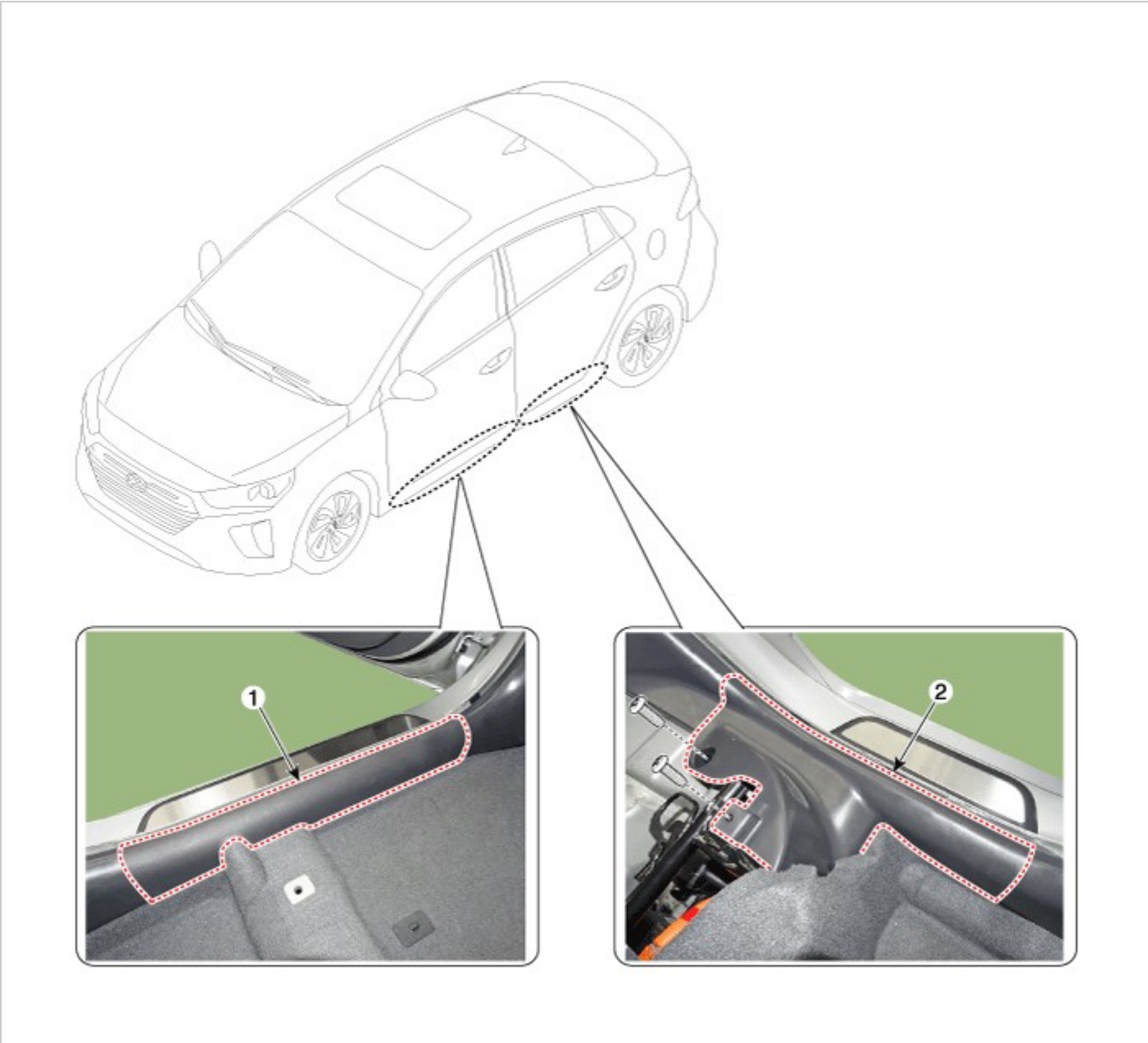

1. Front door scuff trim
2. Rear door scuff trim

Replacement

[Front door scuff trim]

CAUTION

- Put on gloves to prevent hand injuries.

NOTICE

- When removing with a flat-tip screwdriver or remover, wrap protective tape around the tools to prevent damage to components.
- When removing the interior trim pieces, use a plastic panel removal tool not to damage the surface.
- Take care not to bend or scratch the trim and panels.

1. Using a screwdriver or remover, remove the front door scuff trim (A).

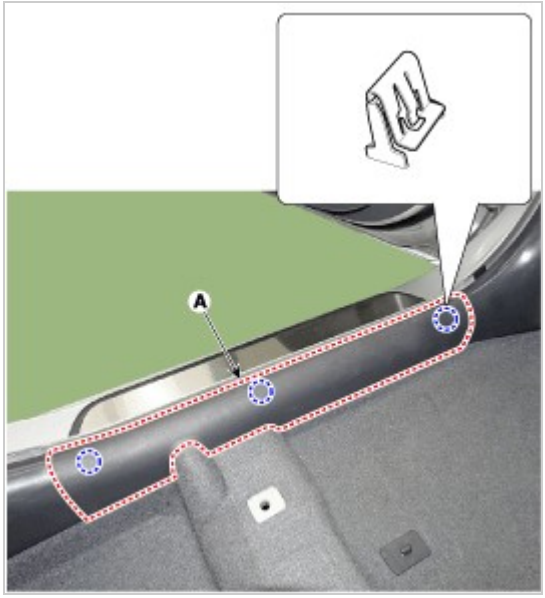

2. To install, reverse the removal procedure.

> **Information**
> - Replace any damaged clips (or pin-type retainers).

[Rear door scuff trim]

> **CAUTION**
> - Put on gloves to prevent hand injuries.

> **NOTICE**
> - When removing with a flat-tip screwdriver or remover, wrap protective tape around the tools to prevent damage to components.
> - When removing the interior trim pieces, use a plastic panel removal tool not to damage the surface.
> - Take care not to bend or scratch the trim and panels.

1. Remove the rear seat cushion assembly.
   (Refer to Rear Seat - "Rear Seat Assembly")
2. Loosen the mounting screws and remove the rear door scuff trim (A).

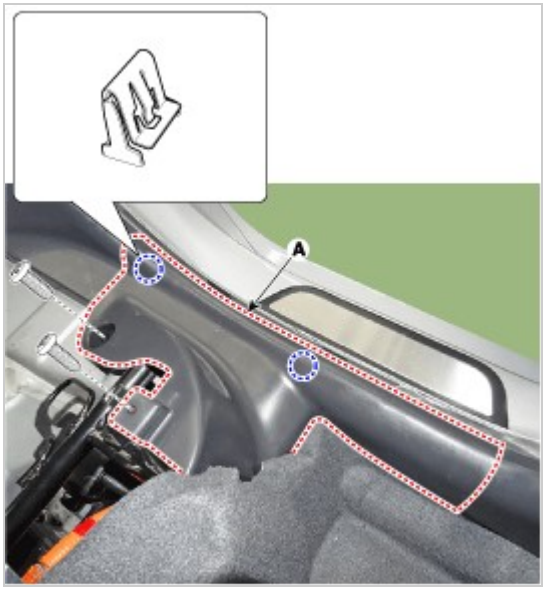

3. To install, reverse the removal procedure.

> **Information**
> - Replace any damaged clips (or pin-type retainers).

Component

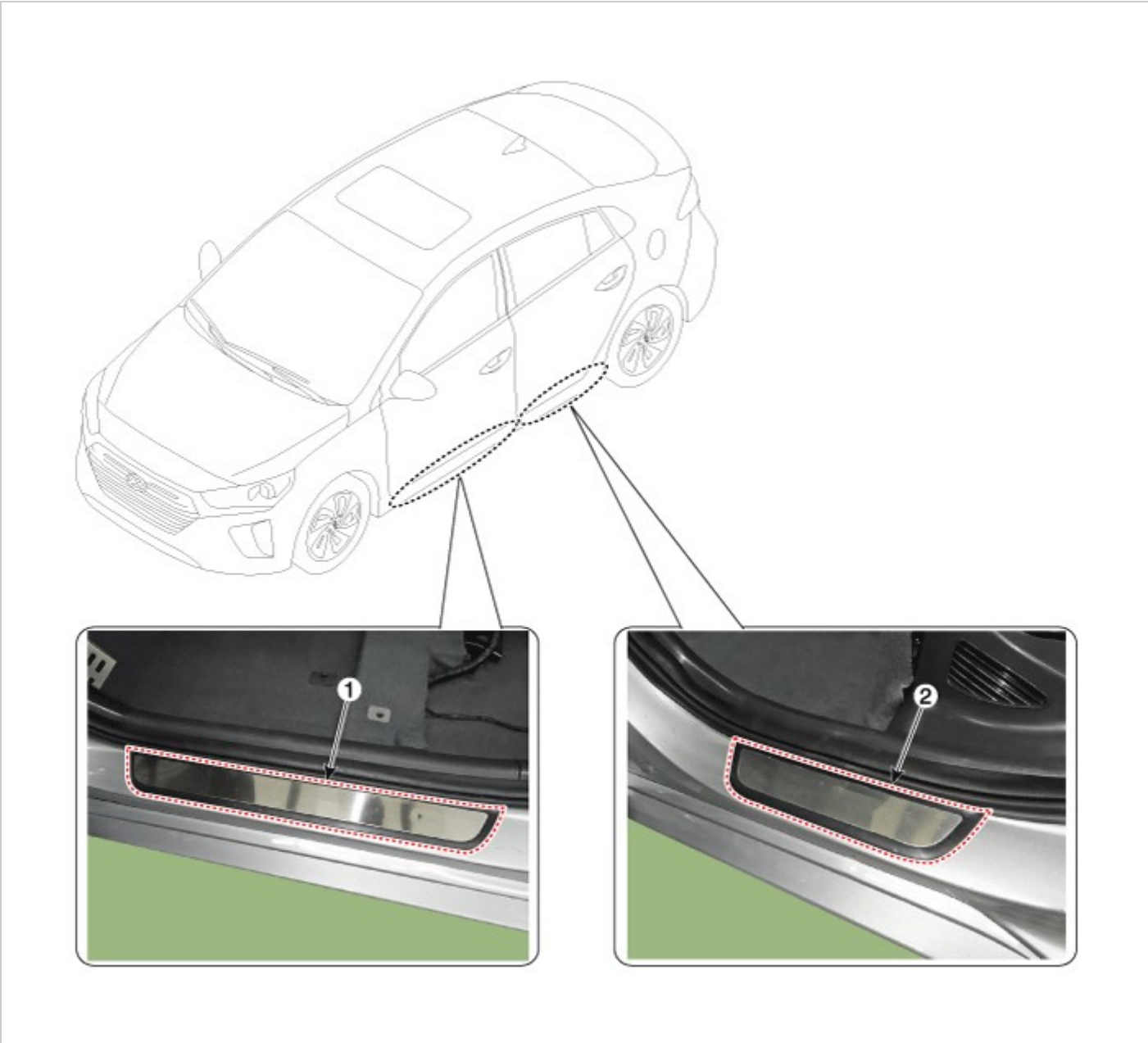

1. Front door step trim
2. Rear door step trim

Replacement

[Front door step trim]

CAUTION

- Put on gloves to prevent hand injuries.

NOTICE

- When removing with a flat-tip screwdriver or remover, wrap protective tape around the tools to prevent damage to components.
- When removing the interior trim pieces, use a plastic panel removal tool not to damage the surface.
- Take care not to bend or scratch the trim and panels.

1. Using a screwdriver or remover, remove the front door step trim (A).

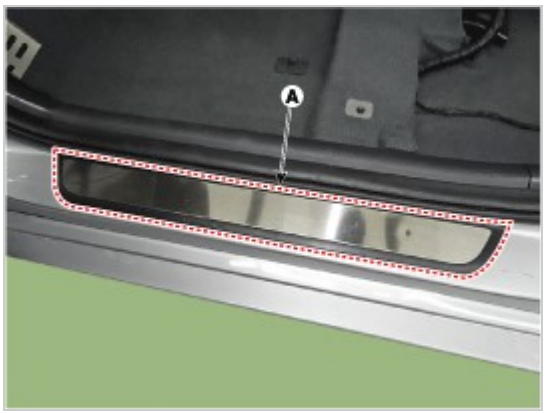

2. To install, reverse the removal procedure.

> **Information**
> - Replace any damaged clips (or retainers or fasteners).

[Rear door step trim]

> **CAUTION**
> - Put on gloves to prevent hand injuries.

> **NOTICE**
> - When removing with a flat-tip screwdriver or remover, wrap protective tape around the tools to prevent damage to components.
> - When removing the interior trim pieces, use a plastic panel removal tool not to damage the surface.
> - Take care not to bend or scratch the trim and panels.

1. Using a screwdriver or remover, remove the rear door step trim (A).

2. To install, reverse the removal procedure.

> **Information**
> - Replace any damaged clips (or retainers or fasteners).

Component Location

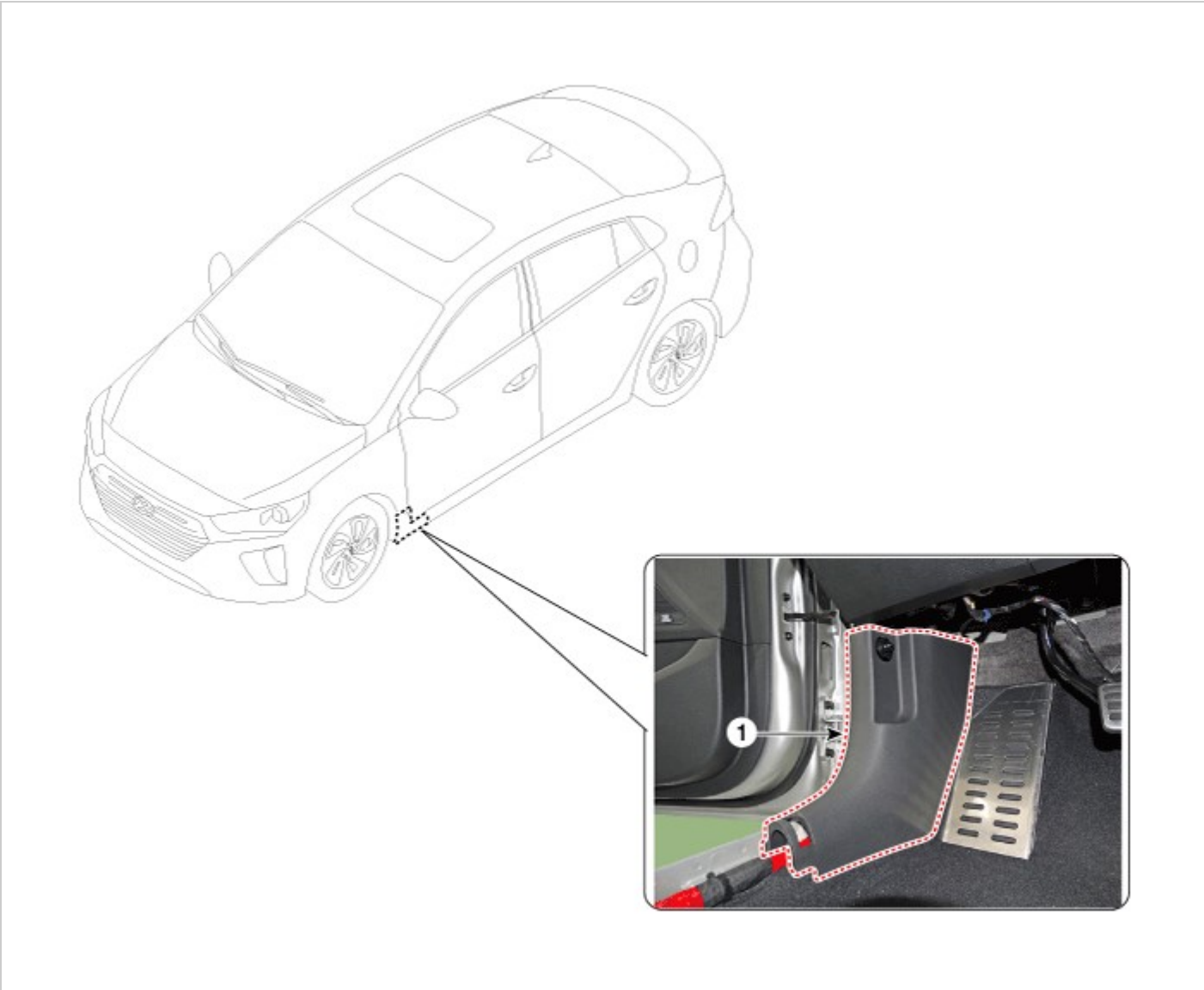

1. Cowl side trim

Replacement

CAUTION

- Put on gloves to prevent hand injuries.

NOTICE

- When removing with a flat-tip screwdriver or remover, wrap protective tape around the tools to prevent damage to components.
- When removing the interior trim pieces, use a plastic panel removal tool not to damage the surface.
- Take care not to bend or scratch the trim and panels.

1. Remove the front door scuff trim.
   (Refer to Interior Trim - "Door Scuff Trim")
2. Remove the hood latch release handle.
   (Refer to Hood - "Hood Latch Release Handle")
3. Carefully remove the front door body side weatherstrip.
4. Using a screwdriver or remover, remove the cowl side trim (A).

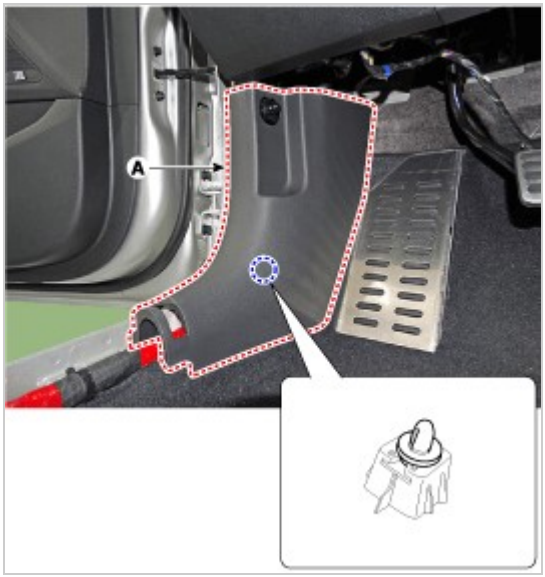

5. To install, reverse the removal procedure.

> **Information**
> - Replace any damaged clips (or pin-type retainers).

Body (Interior and Exterior)

Component Location

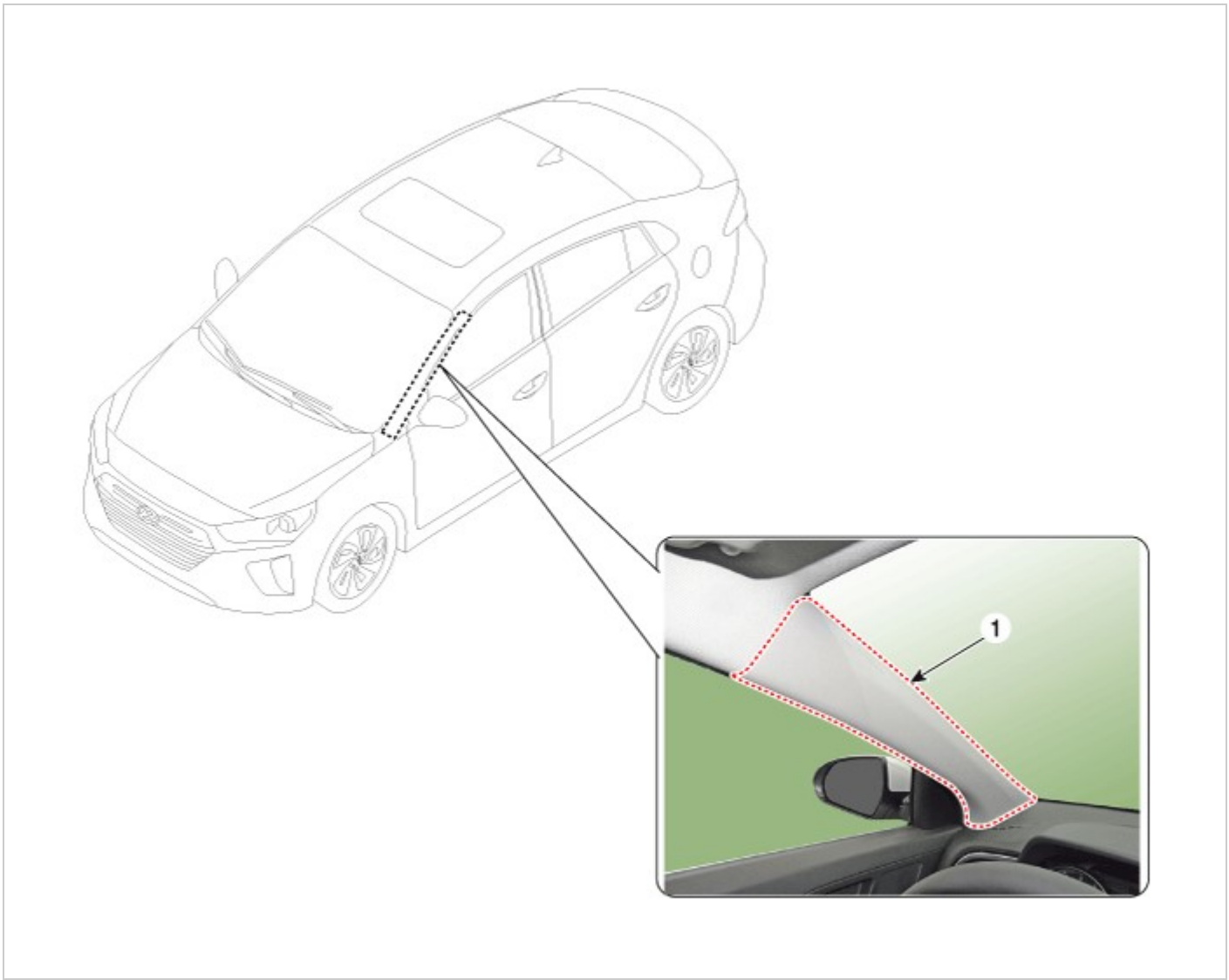

1. Front pillar trim

Body (Interior and Exterior)

Replacement

CAUTION

- Put on gloves to prevent hand injuries.

NOTICE

- When removing with a flat-tip screwdriver or remover, wrap protective tape around the tools to prevent damage to components.
- When removing the interior trim pieces, use a plastic panel removal tool not to damage the surface.
- Take care not to bend or scratch the trim and panels.

1. Remove the front pillar trim.
   (1) To remove the front pillar trim, the fastener remover (A) below must be used.

   (2) After slightly lifting up the front pillar trim and putting the tool in, remove the mounting clip (A) by pulling it.

NOTICE

- Be sure to replace the existing clips with new ones when removing or replacing the front pillar trim.

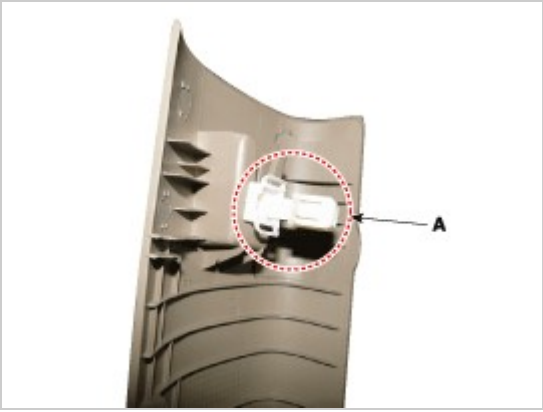

   (3) Remove the front pillar trim (A).

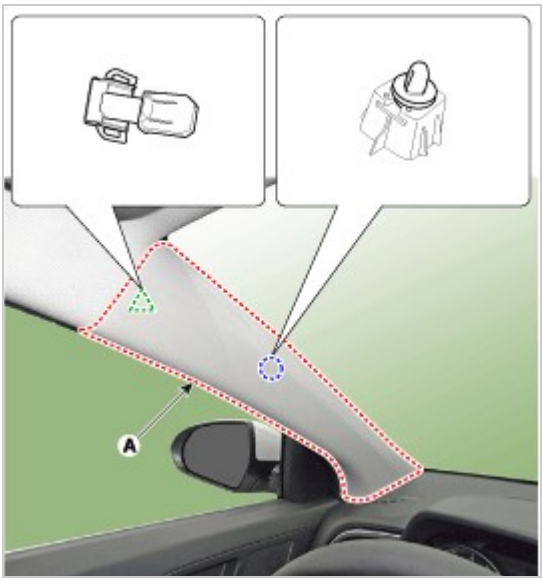

2. To install, reverse the removal procedure.

Information

- Replace any damaged clips (or pin-type retainers).
- Be sure to replace the existing clips with new ones when removing or replacing the front pillar trim.

Component Location

1. Center pillar lower trim
2. Center pillar upper trim

Replacement

[Center pillar lower trim]

CAUTION

- Put on gloves to prevent hand injuries.

NOTICE

- When removing with a flat-tip screwdriver or remover, wrap protective tape around the tools to prevent damage to components.
- When removing the interior trim pieces, use a plastic panel removal tool not to damage the surface.
- Take care not to bend or scratch the trim and panels.

1. Remove the front door scuff trim.
   (Refer to Interior Trim - "Door Scuff Trim")
2. Remove the rear door scuff trim.
   (Refer to Interior Trim - "Door Scuff Trim")
3. Carefully remove the front door body side weatherstrip.
4. Carefully remove the rear door body side weatherstrip.
5. Using a screwdriver or remover, remove the center pillar lower trim (A).

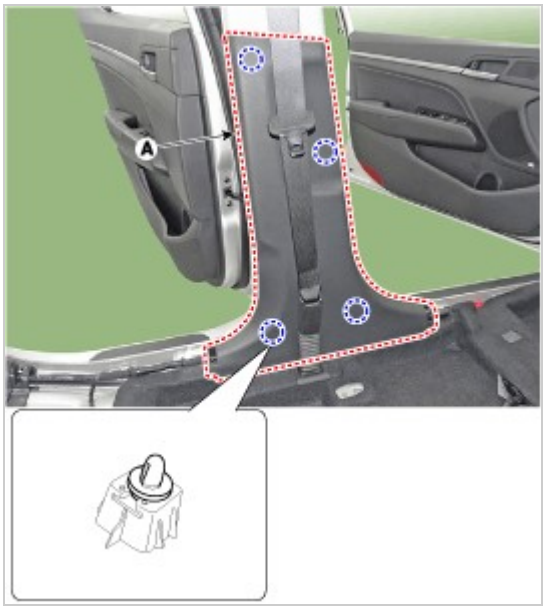

6. To install, reverse the removal procedure.

Information

- Replace any damaged clips (or pin-type retainers).

[Center pillar upper trim]

CAUTION

- Put on gloves to prevent hand injuries.

NOTICE

- When removing with a flat-tip screwdriver or remover, wrap protective tape around the tools to prevent damage to components.
- When removing the interior trim pieces, use a plastic panel removal tool not to damage the surface.
- Take care not to bend or scratch the trim and panels.

1. Remove the center pillar lower trim.
   (Refer to Interior Trim - "Center Pillar Trim")
2. Remove the anchor seat belt connector.
   (Refer to Restraint - "Emergency Fastening Device (EFD)")
3. Using a screwdriver or remover, remove the center pillar upper trim (A).

4. To install, reverse the removal procedure.

> **Information**
> • Replace any damaged clips (or pin-type retainers).

Body (Interior and Exterior)

Component Location

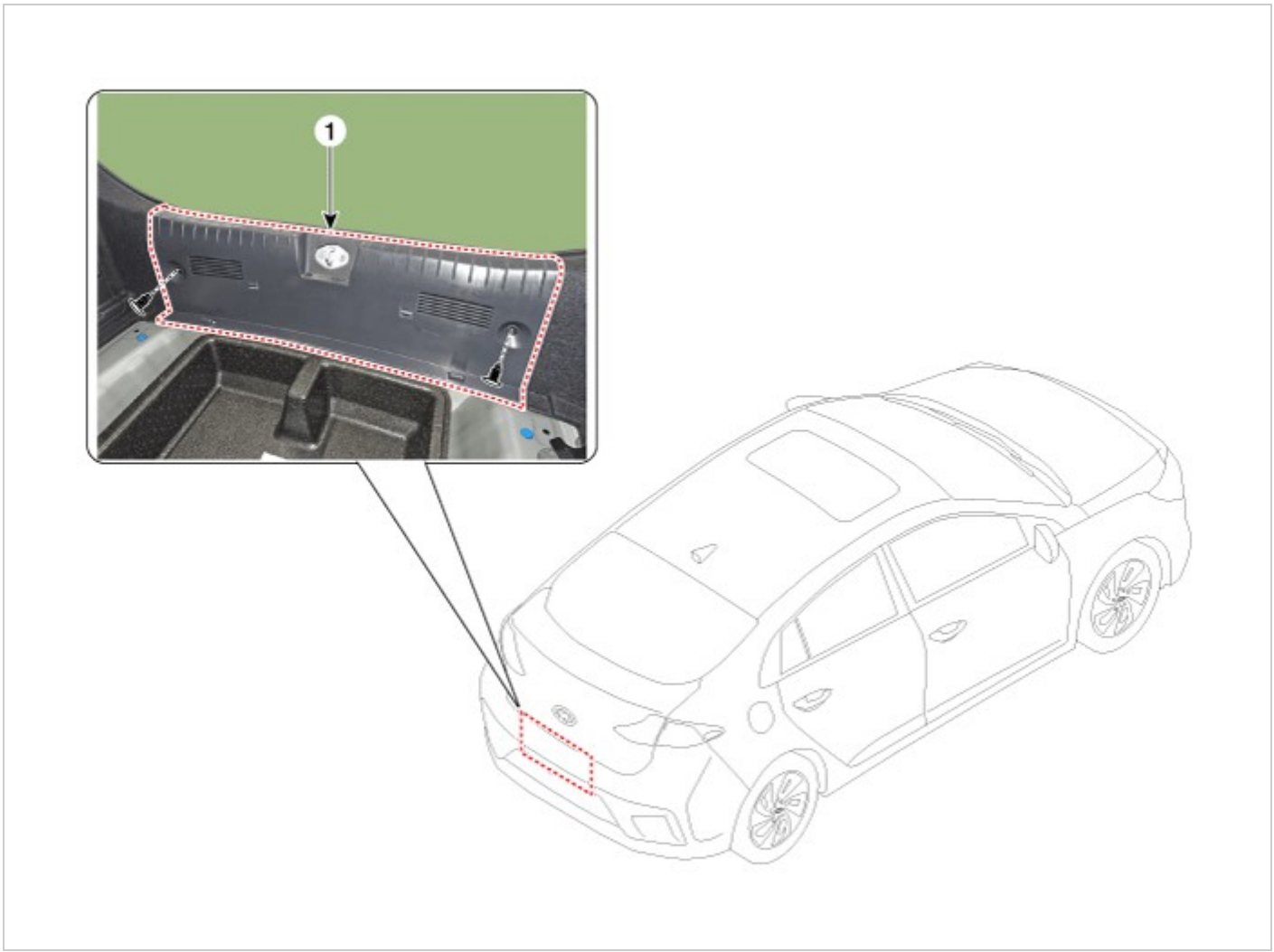

1. Rear transverse trim

Body (Interior and Exterior)

Replacement

CAUTION

- Put on gloves to prevent hand injuries.

Information

- When removing with a flat-tip screwdriver or remover, wrap protective tape around the tools to prevent damage to components.
- When removing the interior trim pieces, use a plastic panel removal tool not to damage the surface.
- Take care not to bend or scratch the trim and panels.

1. Remove the luggage boad (A).

2. Loosen the mounting screws, remove the luggage side trim & center tray trim (A).

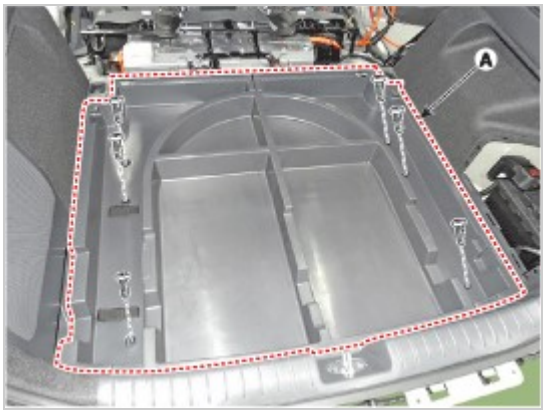

3. Loosen the mounting clips and remove the rear transverse trim (A).

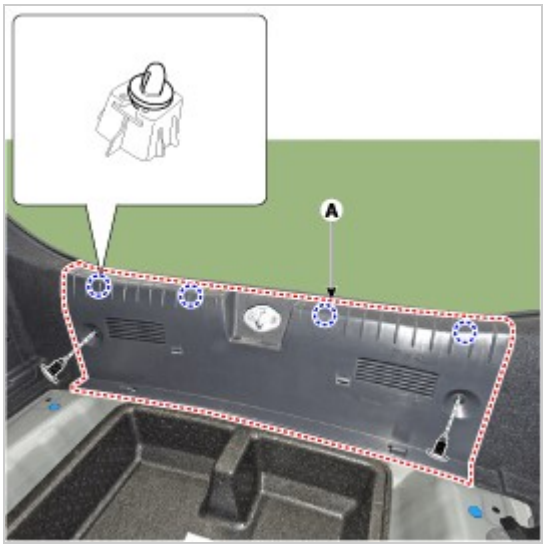

4. To install, reverse the removal procedure.

Information

- Replace any damaged clips (or pin-type retainers).

Body (Interior and Exterior)

Component Location

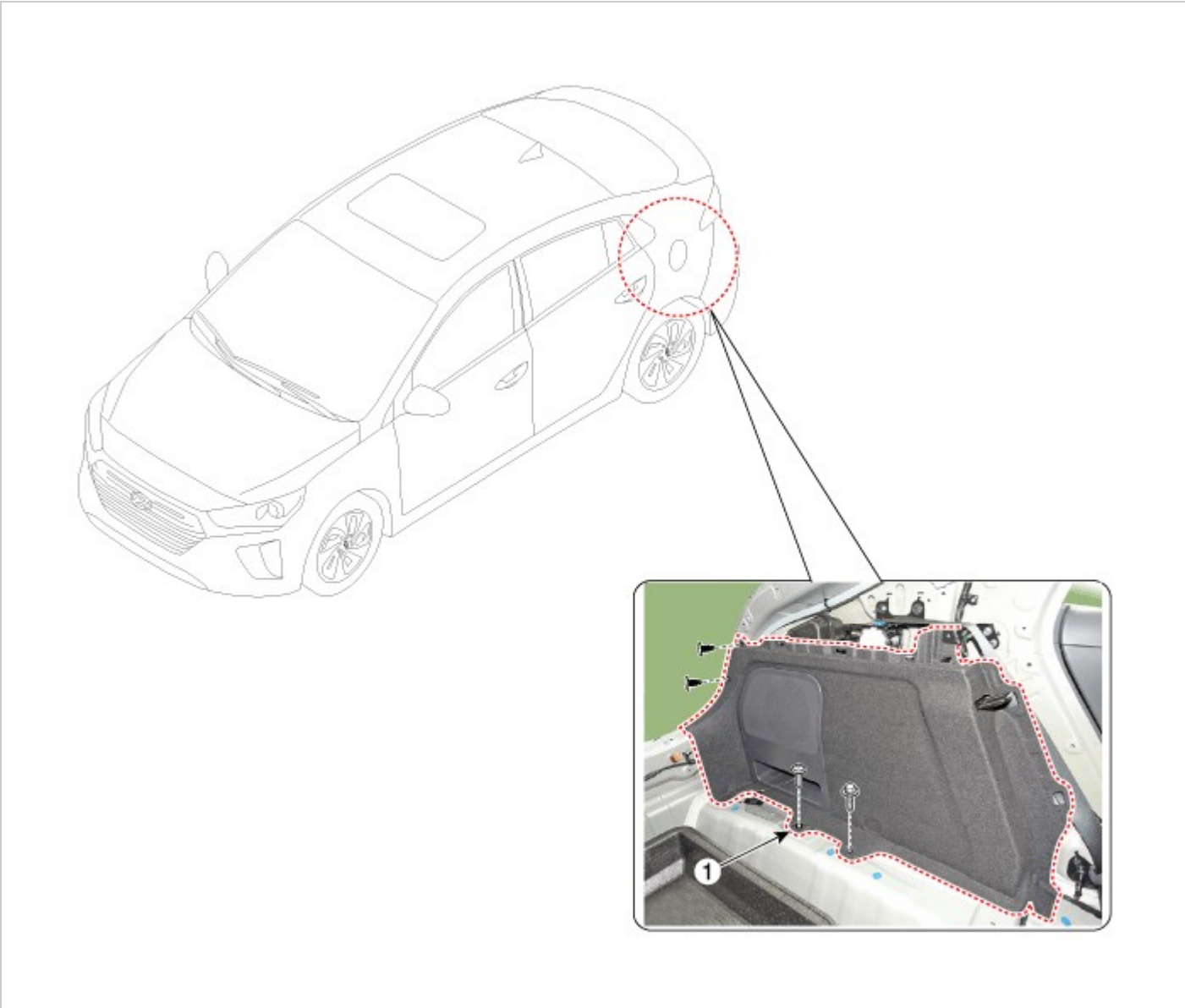

1. Luggage side trim

Body (Interior and Exterior)

Replacement

CAUTION

- Put on gloves to prevent hand injuries.

NOTICE

- When removing with a flat-tip screwdriver or remover, wrap protective tape around the tools to prevent damage to components.
- When removing the interior trim pieces, use a plastic panel removal tool not to damage the surface.
- Take care not to bend or scratch the trim and panels.

1. Remove the rear seat assembly
   (Refer to Rear Seat - "Rear Seat Assembly")
2. Carefully remove the rear door body side weatherstrip.
3. Remove the rear door scuff trim.
   (Refer to Interior Trim - "Door Scuff Trim")
4. Remove the rear transverse trim.
   (Refer to Interior Trim - "Rear Transverse Trim")
5. After loosening the mounting clips, bolts and screws, remove the luggage side trim (A).

6. To install, reverse the removal procedure.

> **Information**
> - Replace any damaged clips (or pin-type retainers).

Body (Interior and Exterior)

Component Location

1. Rear pillar trim

Body (Interior and Exterior)

Replacement

CAUTION

- Put on gloves to prevent hand injuries.

NOTICE

- When removing with a flat-tip screwdriver or remover, wrap protective tape around the tools to prevent damage to components.
- When removing the interior trim pieces, use a plastic panel removal tool not to damage the surface.
- Take care not to bend or scratch the trim and panels.

1. Remove the rear wheel house trim
   (Refer to Interior Trim - "Rear Wheel House Trim")
2. Loosen the mounting bolts, remove the shift side trim covering (A).

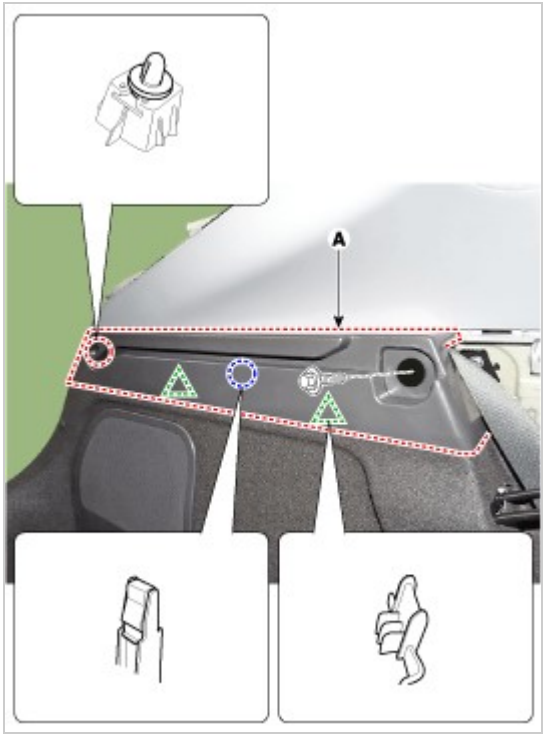

3. Loosen the mounting bolts, remove the rear pillar trim (A).

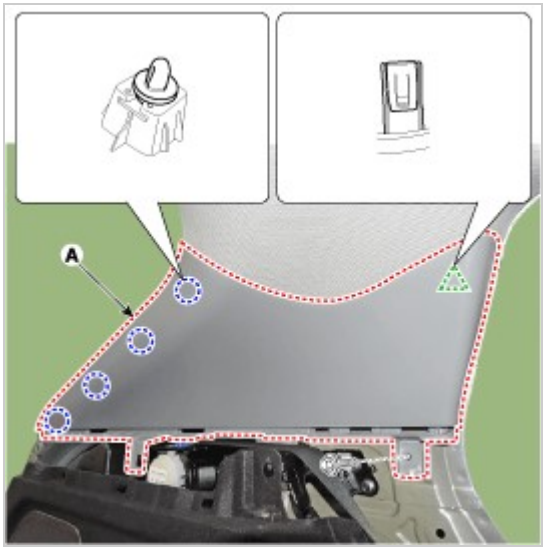

4. To install, reverse the removal procedure.

Information

- Replace any damaged clips (or pin-type retainers).

Body (Interior and Exterior)

Component Location

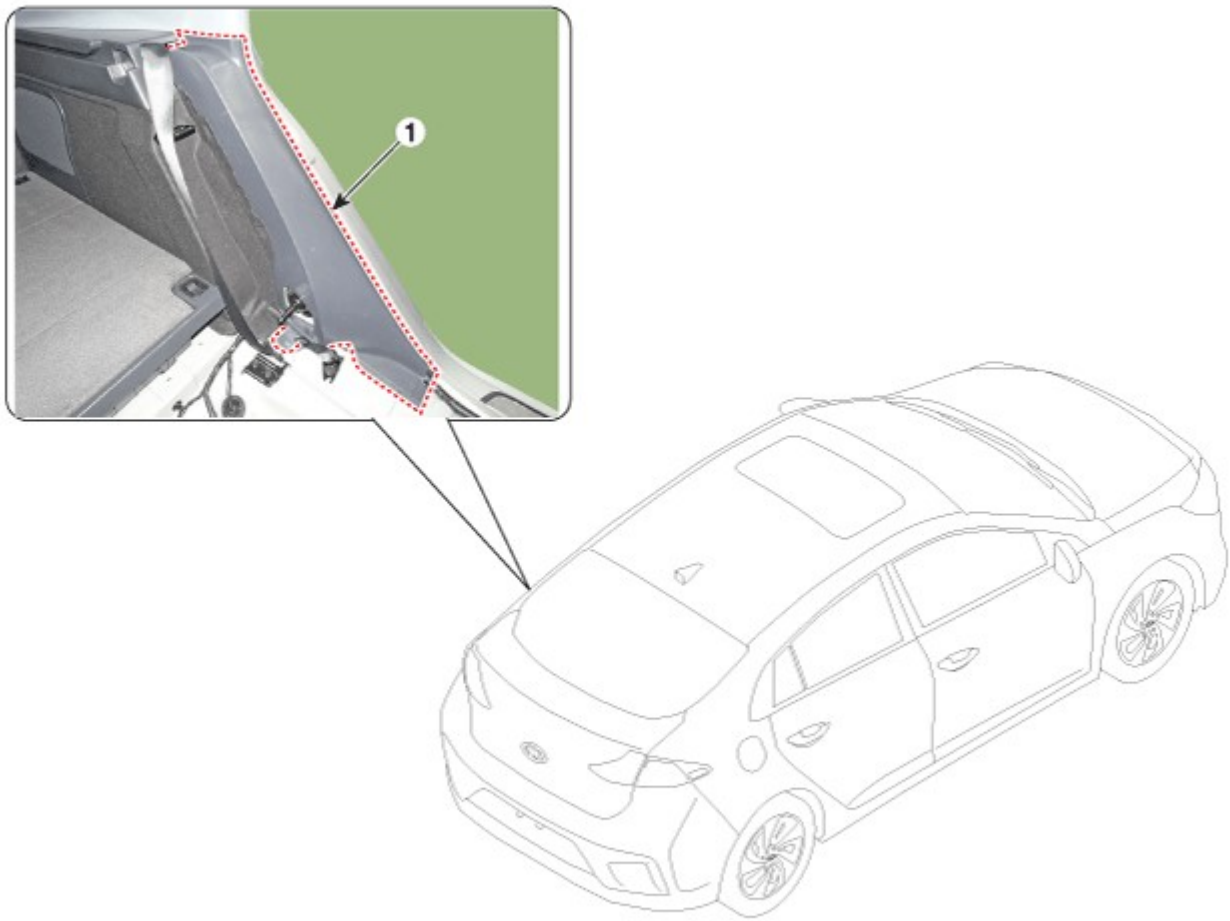

1. Rear wheel house

Body (Interior and Exterior)

Replacement

CAUTION

- Put on gloves to prevent hand injuries.

NOTICE

- When removing with a flat-tip screwdriver or remover, wrap protective tape around the tools to prevent damage to components.
- Use a plastic panel removal tool to remove interior trim pieces without marring the surface.
- Take care not to bend or scratch the trim and panels.

1. Remove the rear seat cushion assembly.
   (Refer to Rear Seat - "Rear Seat Assembly")
2. Remove the rear seat back assembly.
   (Refer to Rear Seat - "Rear Seat Assembly")
3. Slighty remove the rear door weatherstrip.
4. Remove the rear door scuff trim.
   (Refer to Interior Trim - "Door Scuff Trim")
5. Using a screwdriver or remover, remove the rear wheel house trim (A).

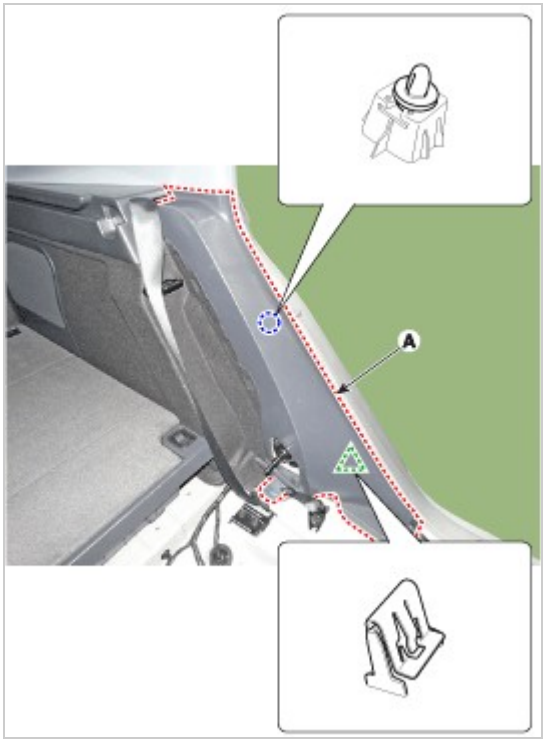

6. To install, reverse the removal procedure.

> **Information**
> - Replace any damaged clips (or pin-type retainers).

Body (Interior and Exterior)

Replacement

> **CAUTION**
> - Put on gloves to prevent hand injuries.

> **NOTICE**
> - When removing with a flat-tip screwdriver or remover, wrap protective tape around the tools to prevent damage to components.
> - When removing the interior trim pieces, use a plastic panel removal tool not to damage the surface.
> - Take care not to bend or scratch the trim and panels.

1. Remove the rear seat cushion assembly.
   (Refer to Rear Seat - "Rear Seat Assembly")
2. Remove the rear seat back assembly.
   (Refer to Rear Seat - "Rear Seat Assembly")
3. Remove the rear door scuff trim.
   (Refer to Interior Trim - "Door Scuff Trim")
4. After loosening the mounting bolts, then remove the shift side trim covering (A).
5. Remove the luggage covering mat (B).
6. Remove the rear transverse trim (C).
7. After loosening the mounting screws, remove the luggage side trim (D).
8. To install, reverse the removal procedure.

> **Information**
> - Replace any damaged clips.

[General type]

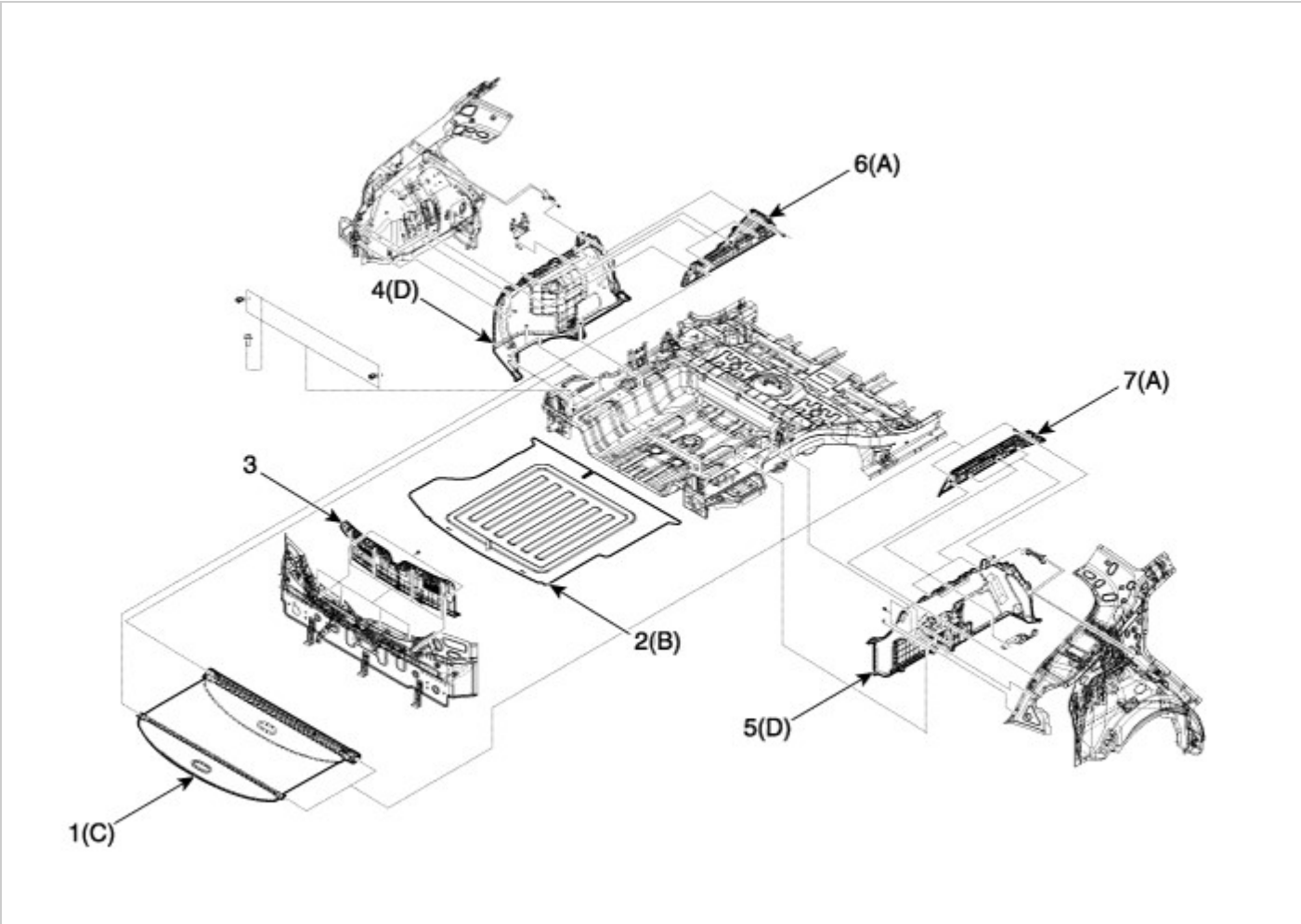

1. Cargo screens
2. Rear transverse trim
3. Luggage mat
4. Luggage side trim [LH]
5. Luggage side trim [RH]
6. Shift side trim covering [LH]
7. Shift side trim covering [RH]

[Wooper type]

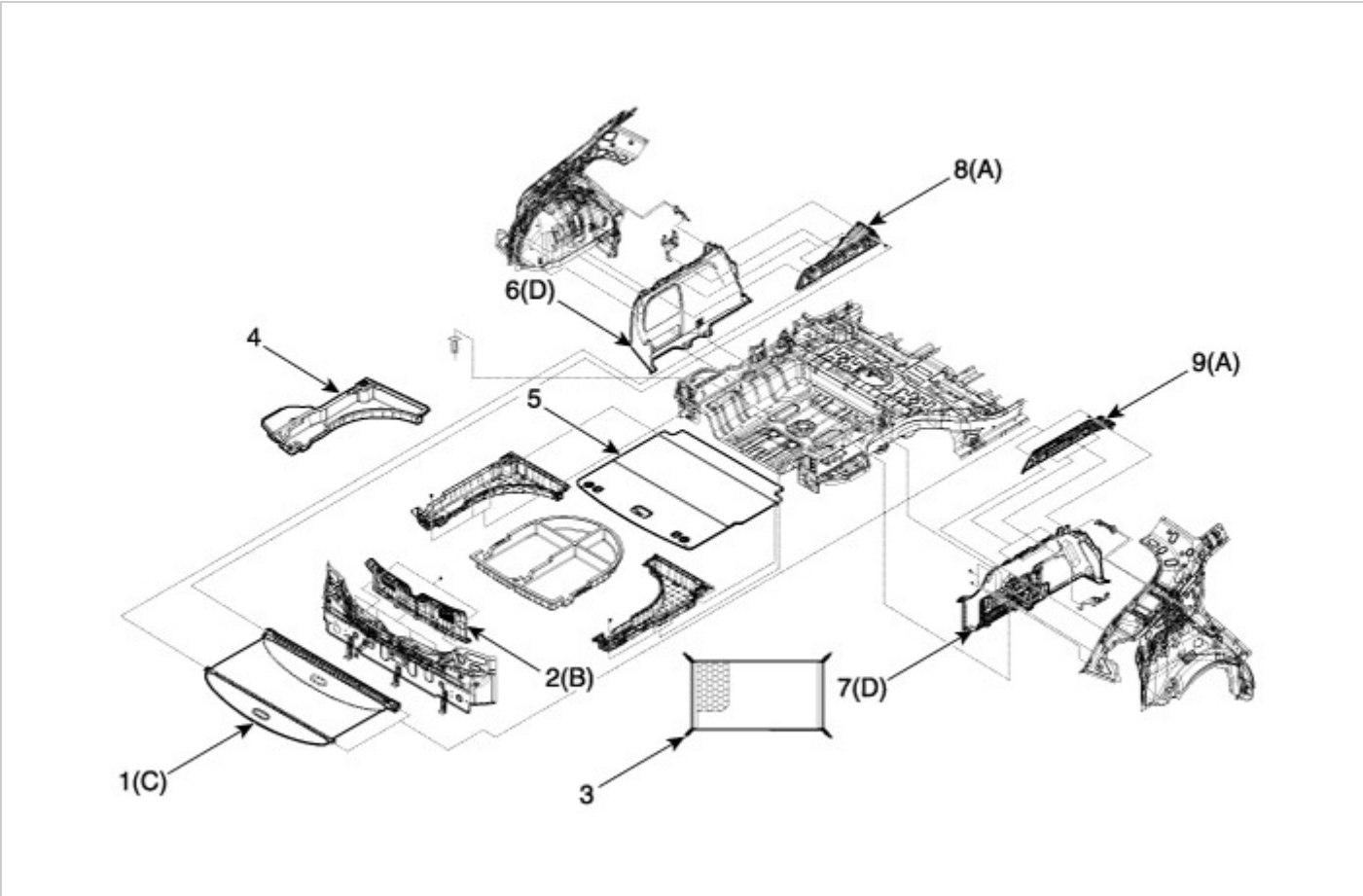

1. Cargo screens
2. Rear transverse trim
3. Luggage mat
4. Luggage side tay assembly
5. Luggage board
6. Luggage side trim [LH]
7. Luggage side trim [RH]
8. Shift side trim covering [LH]
9. Shift side trim covering [RH]

Components

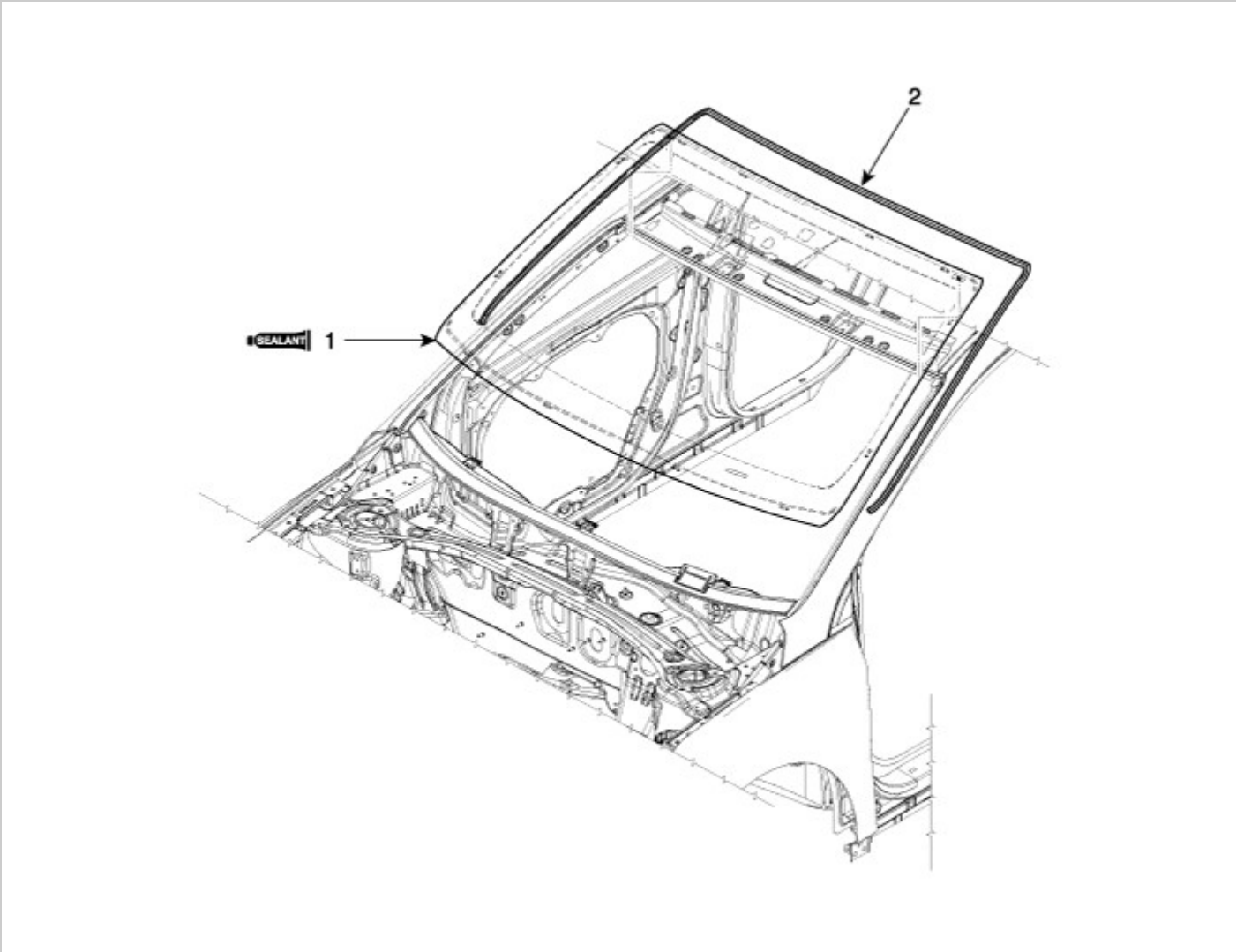

1. Windshield glass
2. Windshield glass upper molding

Replacement

[Removal]

CAUTION

- Put on gloves to prevent hand injuries.

NOTICE

- Use seat covers to avoid damaging any surfaces.

1. Remove the roof side molding.
   (Refer to Body Side Molding - "Roof Side Molding")
2. Remove the front pillar trim.
   (Rear to Interior Trim - "Front Pillar Trim")
3. Remove the inside rear view mirror assembly.
   (Refer to Mirror - "Inside Rear View Mirror")
4. Remove the cowl top cover.

(Refer to "Cowl Top Cover")

5. Using a screwdriver or remover, remove the windshield glass upper molding (A).

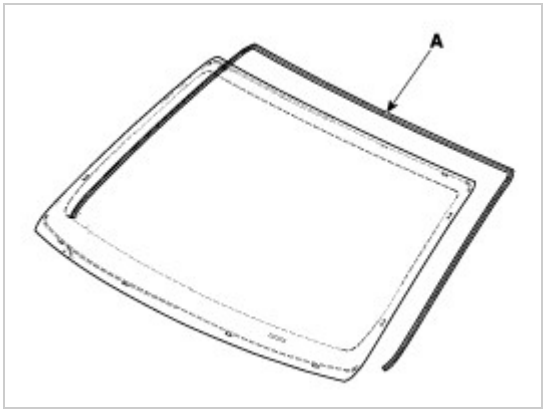

6. Using a cutter (A) knife, carefully remove the windshield glass molding.

Information

- Use the cutter with a 20 to 30 cm-long blade.

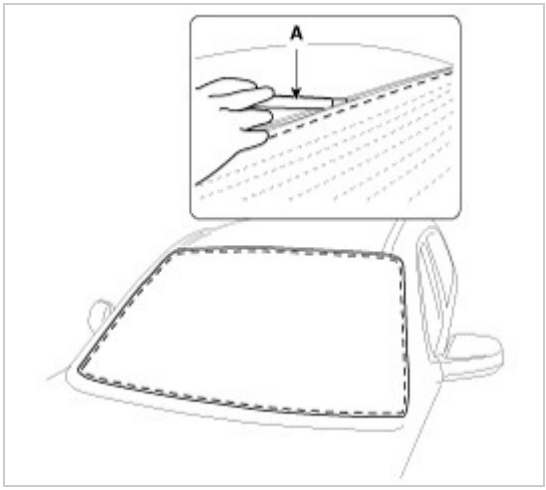

7. Cut off the sealant on the edge (B) while pulling the piano wire (A) to the left and right.

CAUTION

- Put on gloves to protect your hands.
- Heat may occur when working on the wires.
- Be careful not to burn your hands.
- Be careful not to disconnect the piano wire.

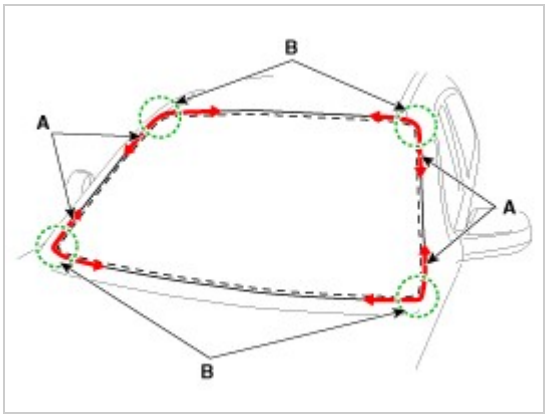

8. Put in a piano wire (A) through the corner of the windshield glass and insert wire grips into both ends of the wire.

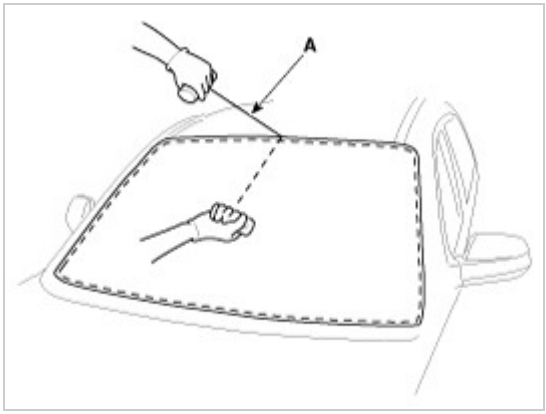

9. Cut off the sealant on (A-A), (B-B), (C-C), while pulling a piano wire (A) to the left and right.

> **⚠ CAUTION**
> - Put on gloves to protect your hands.
> - Heat may occur when working on the wires. Be careful not to burn your hands.
> - Be careful not to disconnect the piano wire.

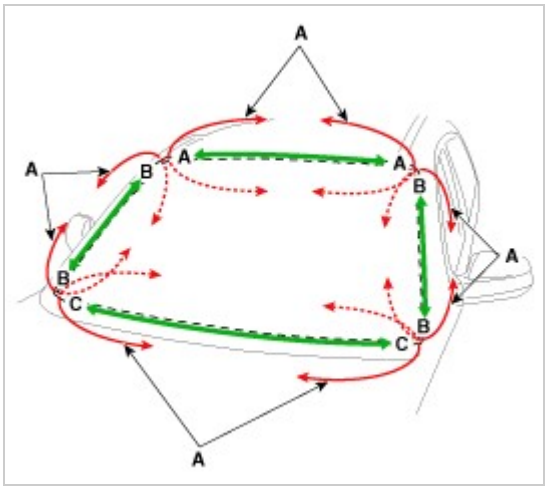

10. Remove the windshield glass (B) carefully using the glass holder (A).

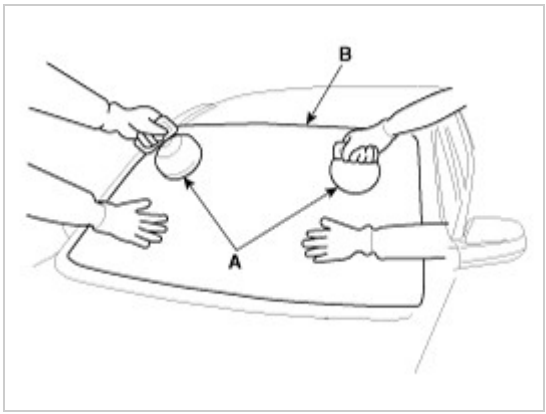

[Installtion]

1. Using a knife, scrape the remaining sealant around the body panel leaving about 2mm-thick sealant (0.0079 in.) on the bonding surface. If installing a new windshield glass, make alignment marks on the windshield glass and the body.

> **NOTICE**
> - Be careful not to damage the painted surface of the body.

> **Information**
> - If the surface is damaged, apply paint or rust inhibitor for maintenance.

2. Clean the edges of body panel and windshield glass with alcohol. Apply glass primer to the edges of windshield glass and attach the molding onto the edges.
3. Apply the body primer to the bonding surface of body panel.

Information

- Be careful not to touch the surface covered with the primer because touching it may lead to water leaks after installing the windshield glass.
- Do not apply the body primer to the glass.
- Remove any foreign materials from the primer-covered surface.

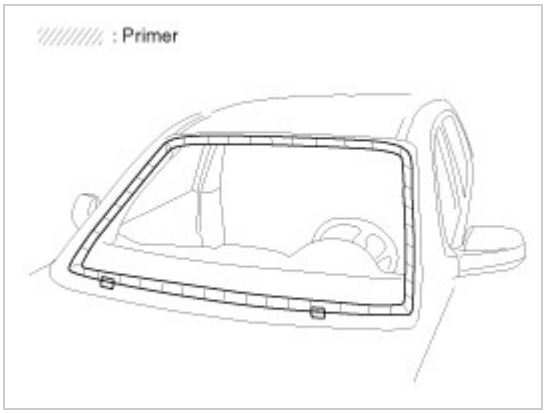

4. Apply the glass primer to the outer edge of windshield glass.

Information

- Be careful not to touch the surface covered with the primer because touching it may lead to water leaks after installing the windshield glass.
- Do not apply the body primer to the glass.
- Remove any foreign materials from the primer-covered surface.
- Apply the sealant within 5 minutes of applying the primer.

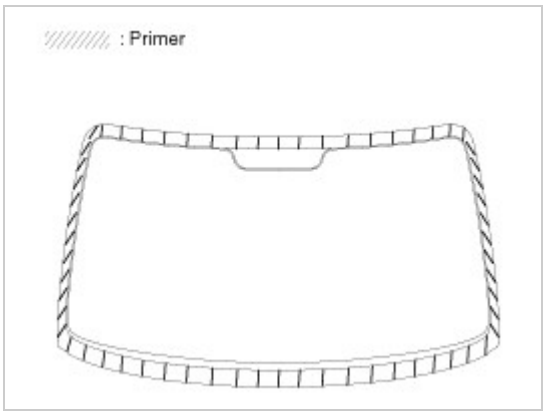

5. Apply a bead of sealant (B) around the windshield glass (A).

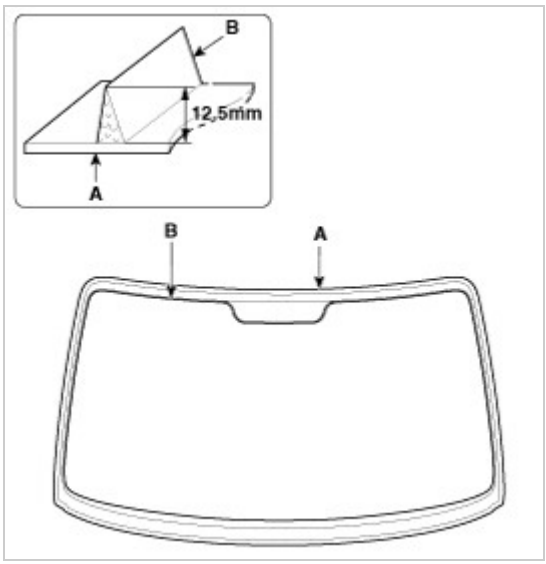

6. Using the glass holder (A), adjust the windshield glass (B) to fit the alignment marks (C) on the body and lightly push the windshield glass to make the edges fully seated on the bonding surface of body.

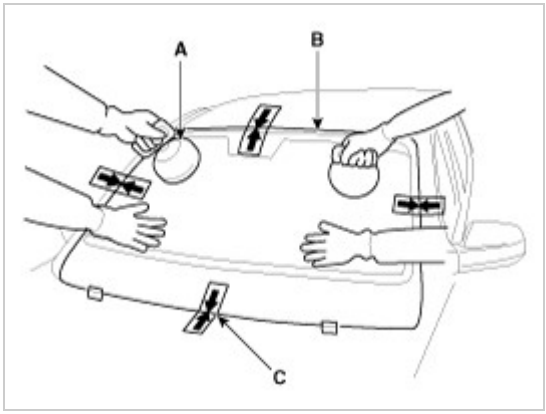

7. Install the windshield glass upper molding (A).

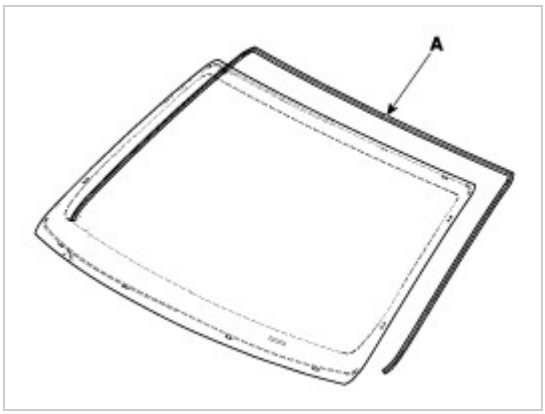

8. To make sure that the applied sealant is completely hardened, leave the car on a flat surface for at least 4 hours after installing the windshield glass.

Information

- If driving the car is inevitable, drive at a low speed for at least 8 hours.
- Advise the driver to avoid aggressive driving or driving on rough roads for 2-3 days after installing the windshield glass.

9. Conduct a leak testing.
   - The leak testing shall be conducted at least 4 hours after the windshield glass installation is completed.
   - Do not directly spray the high-pressure water to the joint area.
10. Install the cowl top cover.
    (Refer to "Cowl Top Cover")
11. Install the inside rear view mirror assembly.
    (Refer to Mirror - "Inside Rear View Mirror")
12. Install the front pillar trim.
    (Rear to Interior Trim - "Front Pillar Trim")
13. Install the roof side molding.
    (Refer to Body Side Molding - "Roof Side Molding")

Body (Interior and Exterior)

Replacement

CAUTION

- Put on gloves to prevent hand injuries.

NOTICE

- When removing with a flat-tip screwdriver or remover, wrap protective tape around the tools to prevent damage to components.
- Use a plastic panel removal tool to remove interior trim pieces without marring the surface.
- Take care not to bend or scratch the trim and panels.

1. Remove the floor console assembly.
   (Refer to Floor Console - "Floor Console Assembly")
2. Remove the front seat assembly.
   (Refer to Front Seat - "Front Seat Assembly")

3. Remove the rear seat cushion assembly.
   (Refer to Rear Seat - "Rear Seat Assembly")
4. Remove the cowl side trim.
   (Refer to Interior Trim - "Cowl Side Trim")
5. Remove the center pillar lower trim.
   (Refer to Interior Trim - "Center Pillar Trim")
6. Remove the floor carpet assembly (A).
7. To install, reverse the removal procedure.

Information

- Replace any damaged clips (or pin-type retainers).

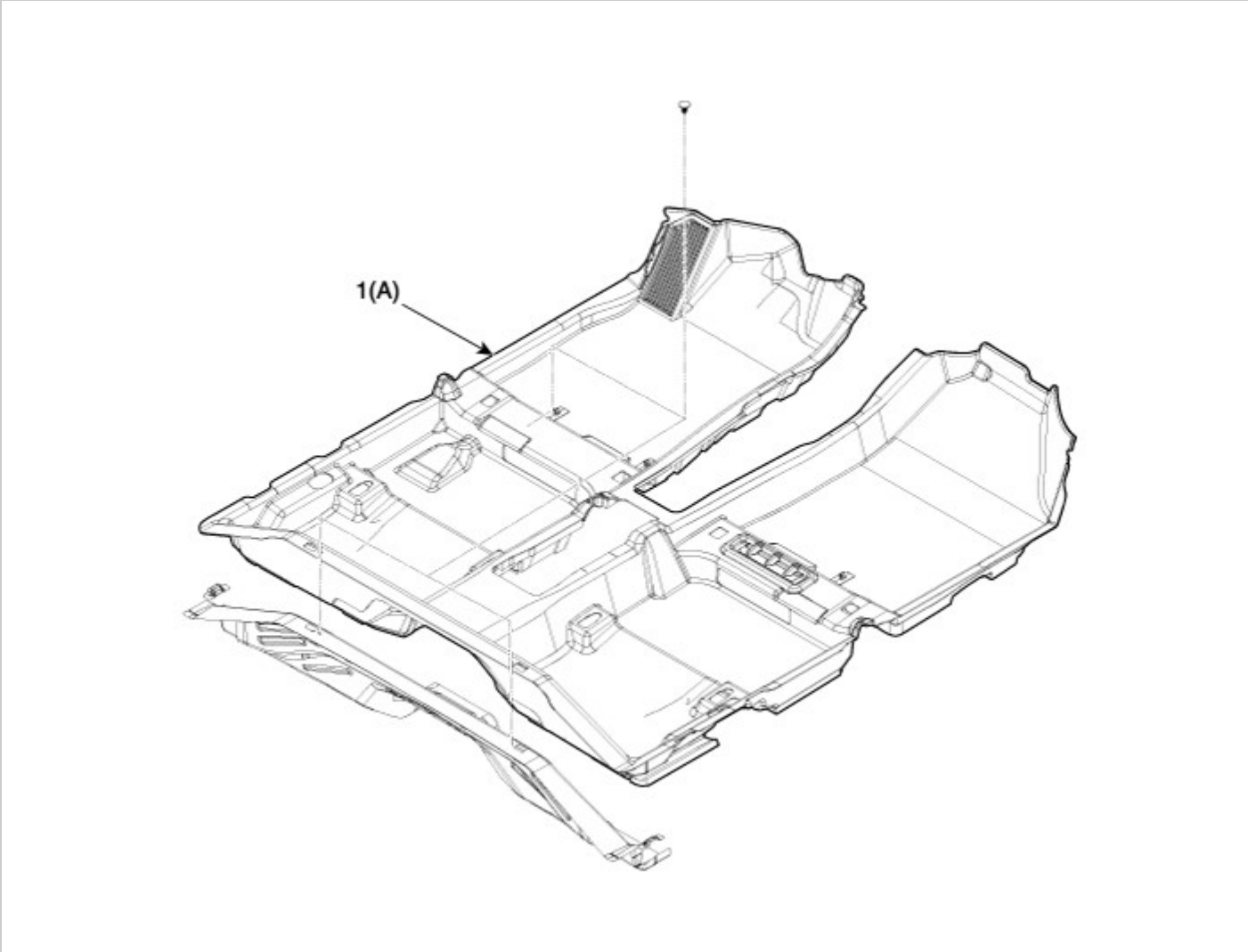

1. Floor carpet assembly

Body (Interior and Exterior)

Components

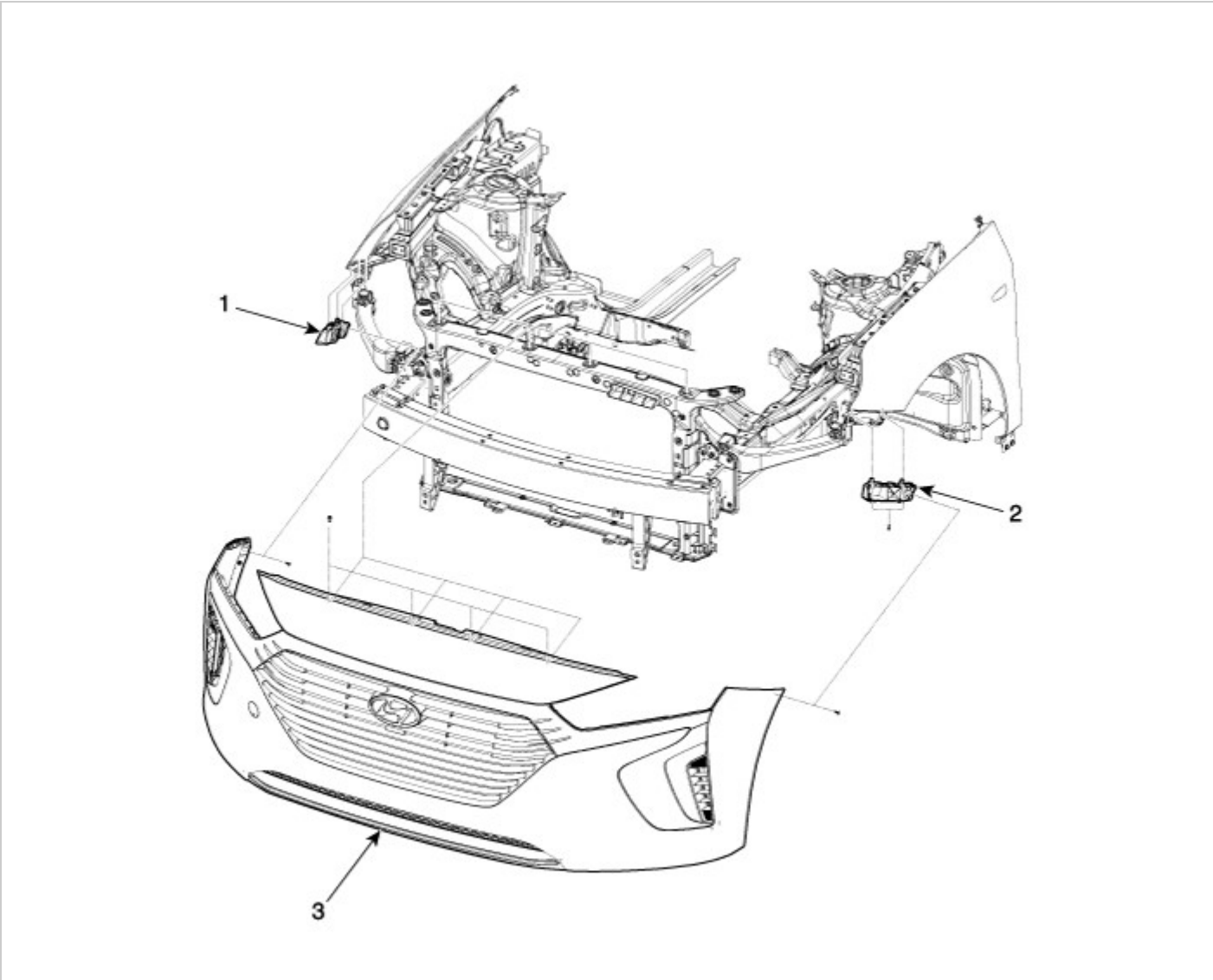

1. Front bumper side bracket [LH]
2. Front bumper side bracket [RH]
3. Front bumper cover

Component Location

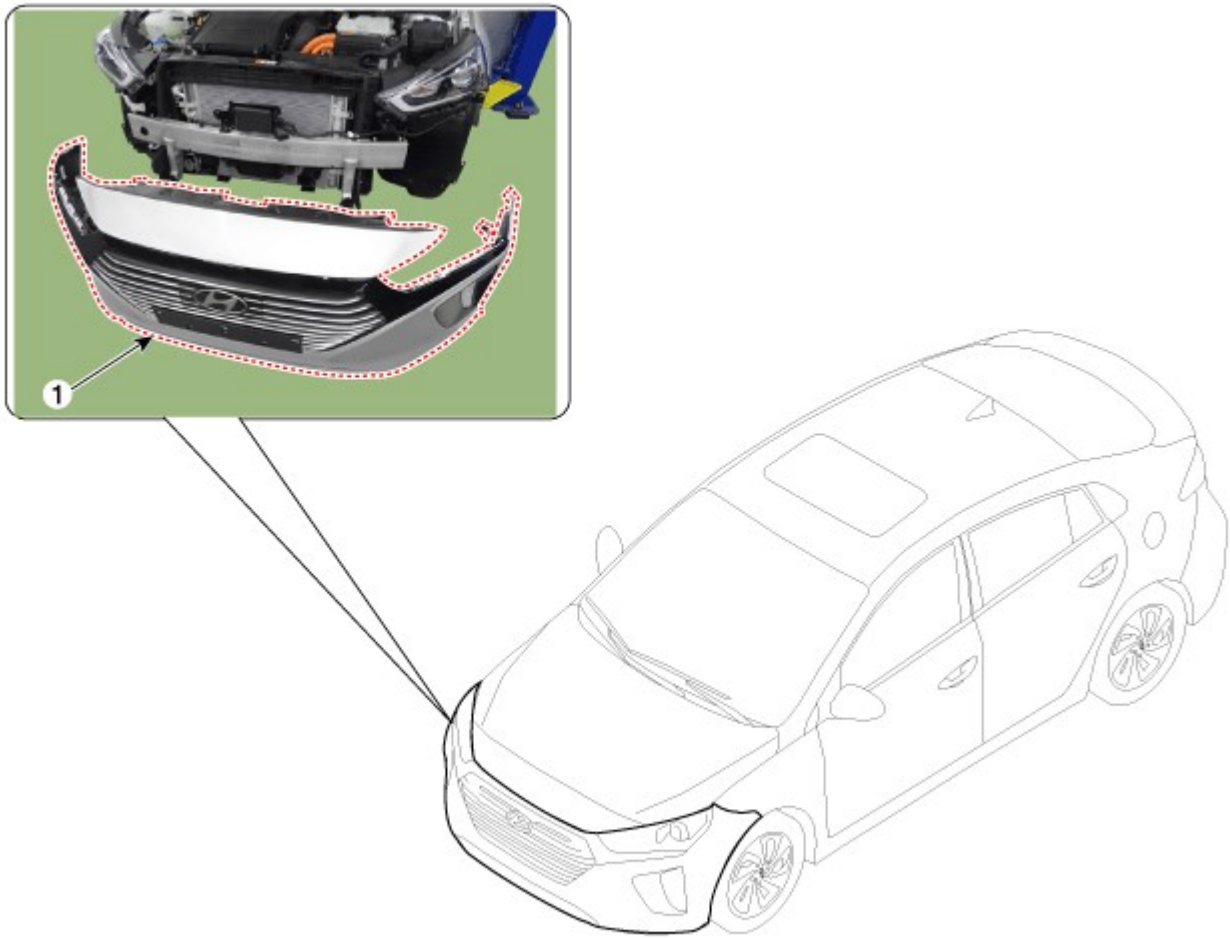

1. Front bumper cover

Replacement

CAUTION

- Put on gloves to prevent hand injuries.

NOTICE

- When removing with a flat-tip screwdriver or remover, wrap protective tape around the tools to prevent damage to components.
- Use a plastic panel removal tool to remove interior trim pieces without marring the surface.
- Take care not to bend or scratch the trim and panels.

1. Loosen the bolts of the front bumper upper.

2. Loosen the front bumper lower mounting clips.

3. After loosening the pin-type retainers and screws on the side of front bumper (A), detach the side part of front bumper.

> **CAUTION**
> - When you pull out the front bumper, the side part of the front bumper could be damaged by the projection.

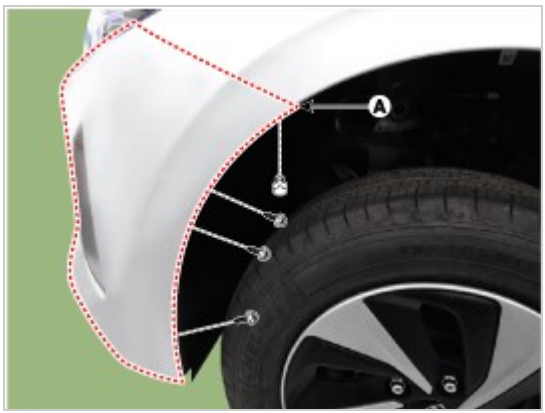

4. Disconnect the front bumper connector (A).

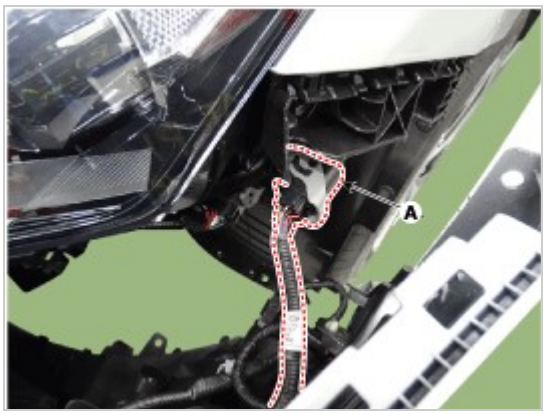

5. Remove the front bumper cover (A).

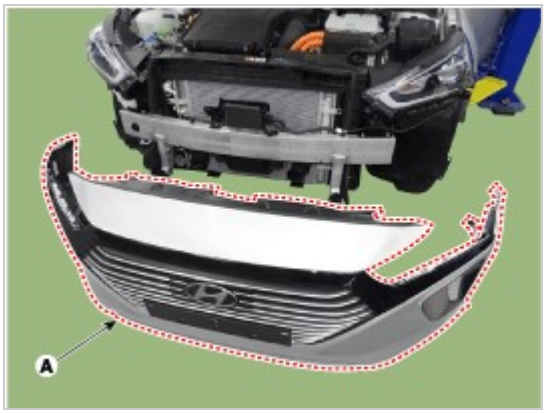

6. To install, reverse the removal procedure.

> **Information**
> - Make sure the connector is plugged in properly.
> - Replace any damaged clips (or pin-type retainers).

Component Location

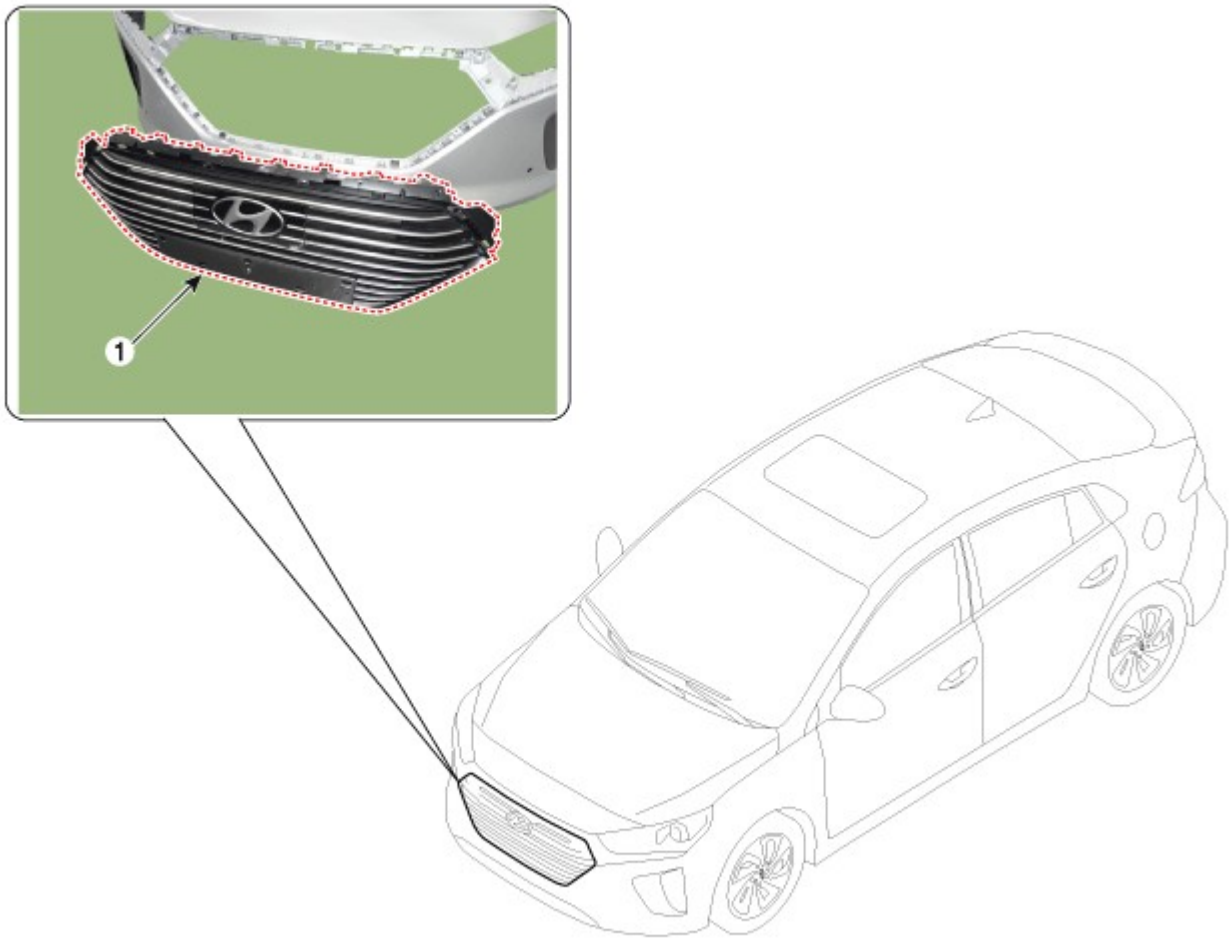

1. Radiator grill

Replacement

CAUTION

- Put on gloves to prevent hand injuries.

NOTICE

- When removing with a flat-tip screwdriver or remover, wrap protective tape around the tools to prevent damage to components.
- Use a plastic panel removal tool to remove interior trim pieces without marring the surface.
- Take care not to bend or scratch the trim and panels.

1. Remove the front bumper cover.
   (Refer to Front Bumper - "Front Bumper Cover")
2. Remove the fixing clip (A) and then the front bumper energy absorber (B).

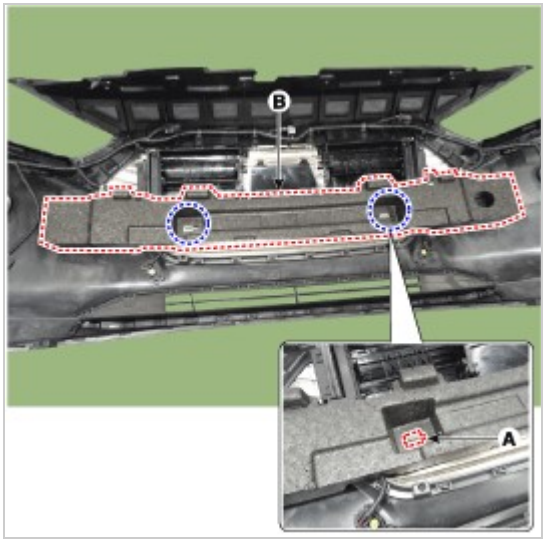

3. Separate the front bumper wiring (A).

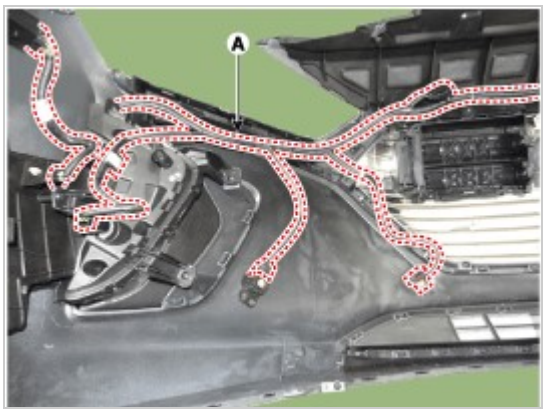

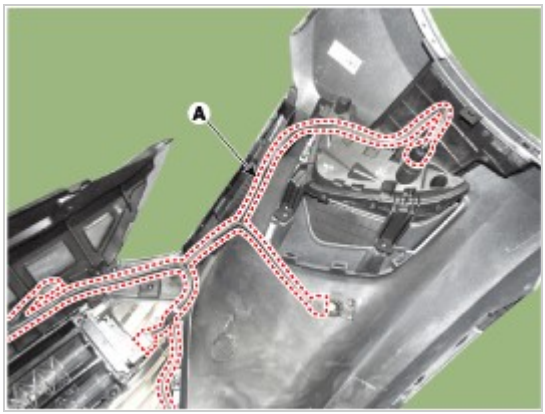

4. After loosening the mounting screws, remove the radiator grill upper cover (A).

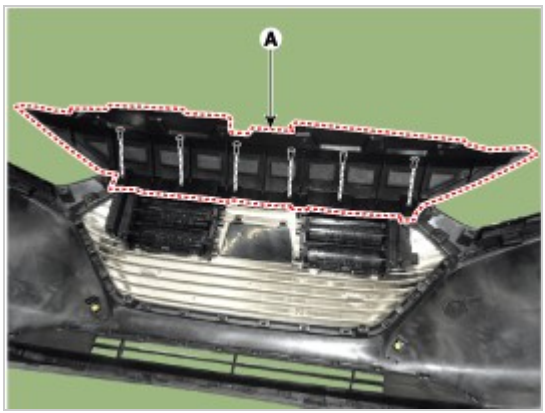

5. After loosening the mounting screws, remove the radiator upper garmish (A).

6. After loosening the mounting screws, remove the radiator grill (A).

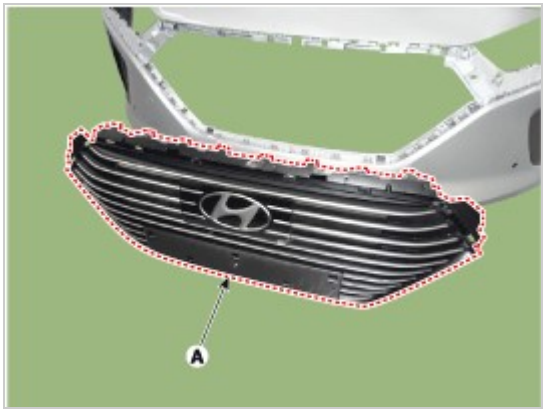

7. Remove the active air flap
   (Refer to Engine Mechanical System - "Active Air Flap")
8. To install, reverse the removal procedure.

> **Information**
> - Replace any damaged clips (or pin-type retainers).

Body (Interior and Exterior)

Components (1)

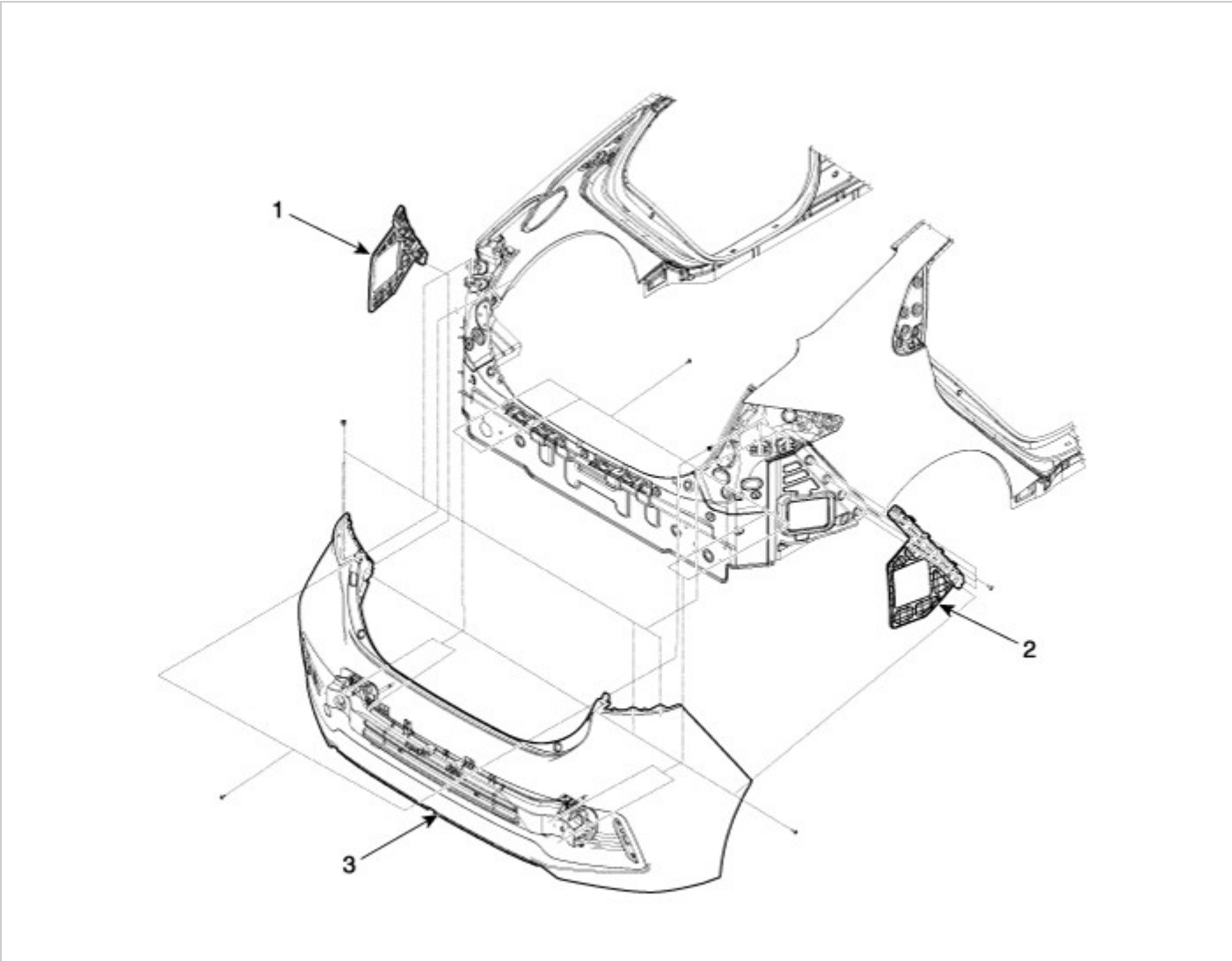

1. Rear bumper side bracket [LH]
2. Rear bumper side bracket [RH]
3. Rear bumper cover

Components (2)

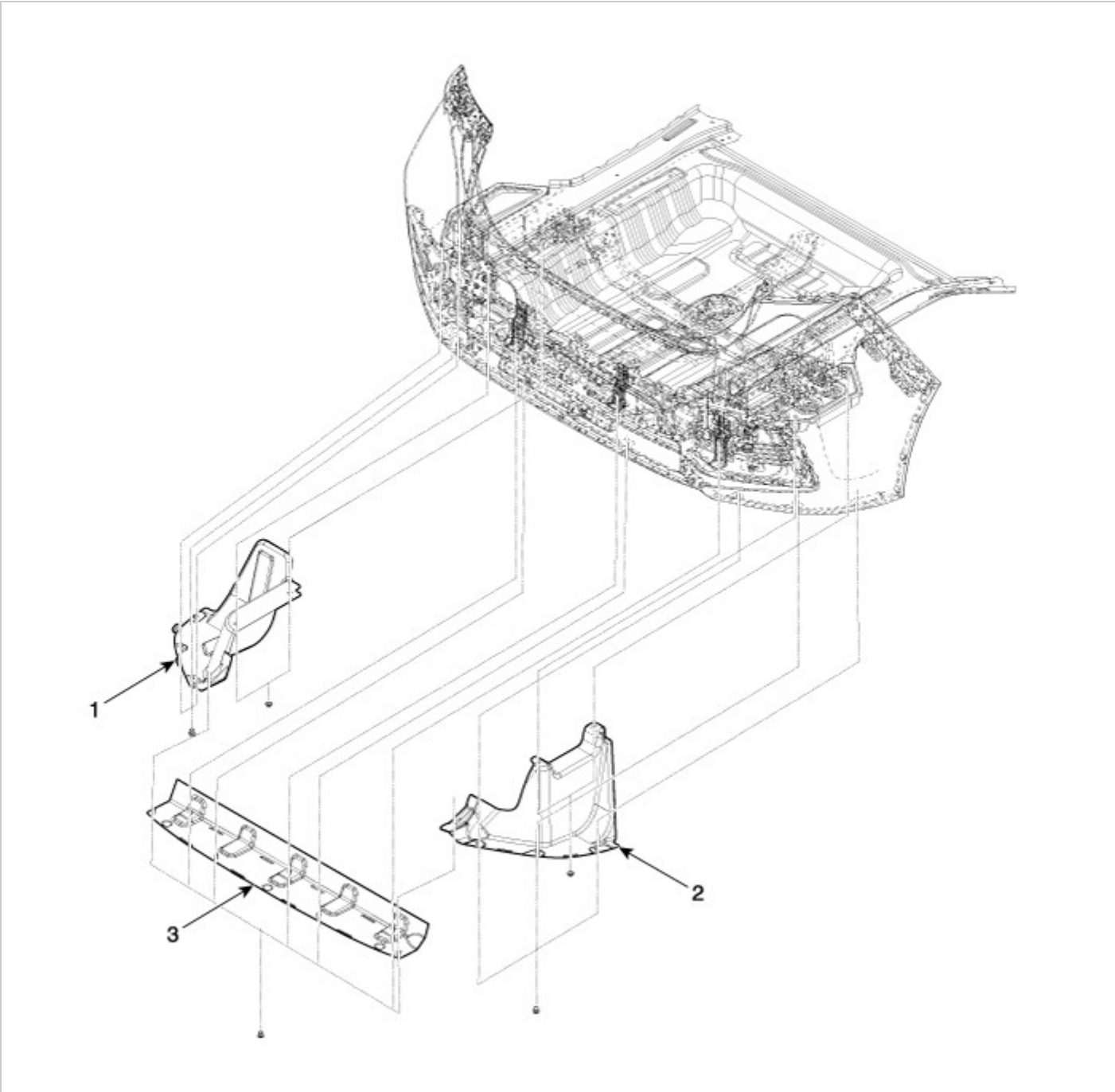

1. Rear bumper side under cover [LH]
2. Rear bumper side under cover [RH]
3. Rear bumper center under cover

Component Location

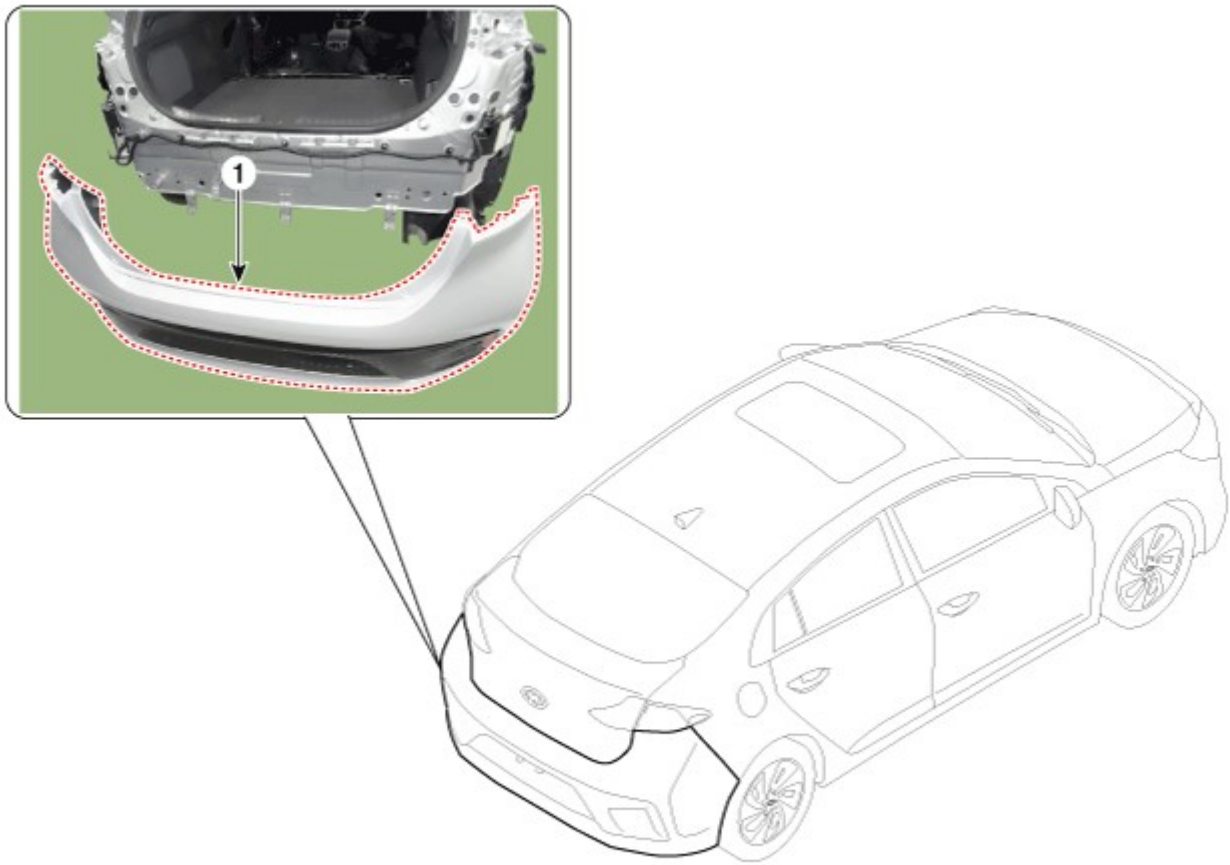

1. Rear bumper cover

Replacement

CAUTION

- Put on gloves to prevent hand injuries.

NOTICE

- When removing with a flat-tip screwdriver or remover, wrap protective tape around the tools to prevent damage to components.
- When removing the interior trim pieces, use a plastic panel removal tool not to damage the surface.
- Take care not to bend or scratch the trim and panels.

1. Remove the rear combination cap (A).

2. Loosen the mounting screws, remove the rear combination lamp (A).

3. Disconnect the rear combination lamp connector (A).

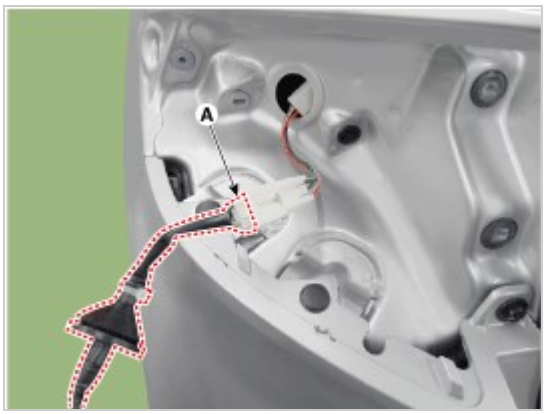

4. Loosen the mounting clips and nuts, remove the rear bumper retainer cover (A).

5. Loosen the mounting bolts.

6. After loosening the pin-type retainers and screws on the side of rear bumper (A), detach the side part of rear bumper.

⚠ CAUTION

- Be careful not to damage the tabs on the side part of front bumper.

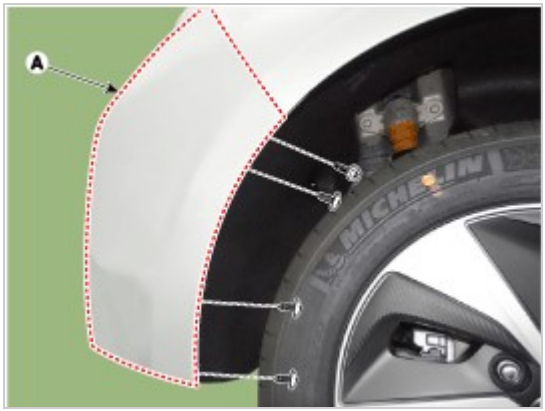

7. Loosen the rear bumper lower mounting pin-type retainers and nuts.

8. After loosening the mounting screws and clips, remove the rear bumper cover (A).

9. Disconnect the rear bumper connector (A).

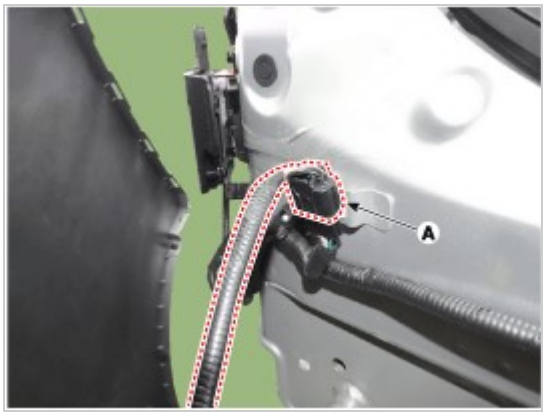

10. To install, reverse the removal procedure.

Information

- Make sure the connector is plugged in properly.
- Replace any damaged clips (or pin-type retainers).

Component Location

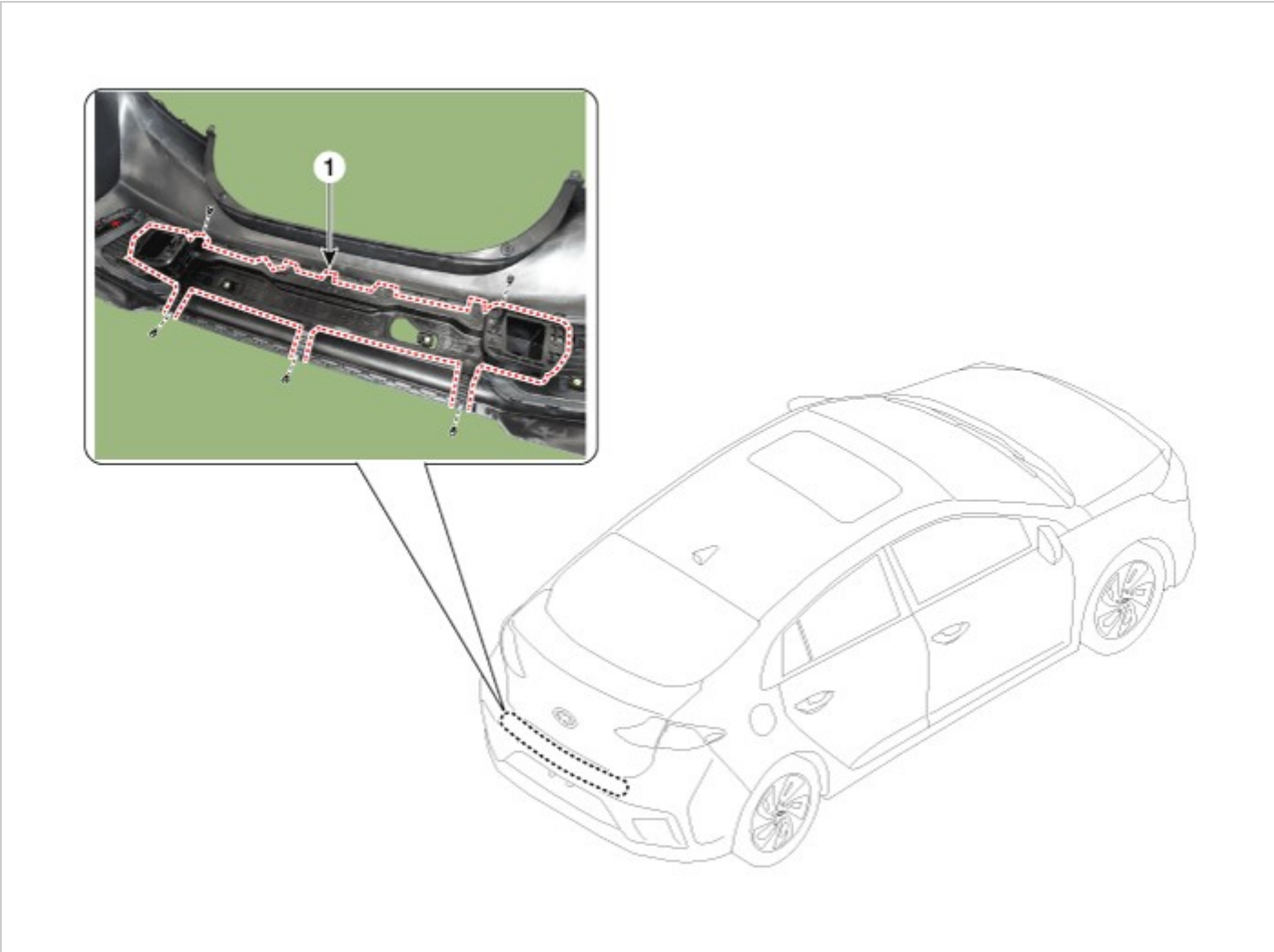

1. Rear bumper beam assembly

Body (Interior and Exterior)

Replacement

CAUTION

- Put on gloves to prevent hand injuries.

NOTICE

- When removing with a flat-tip screwdriver or remover, wrap protective tape around the tools to prevent damage to components.
- When removing the interior trim pieces, use a plastic panel removal tool not to damage the surface.
- Take care not to bend or scratch the trim and panels.

1. Remove the rear bumper cover.
   (Refer to Rear Bumper - "Rear Bumper Cover")
2. Disconnect the rear bumper beam mounting wiring harness (A).

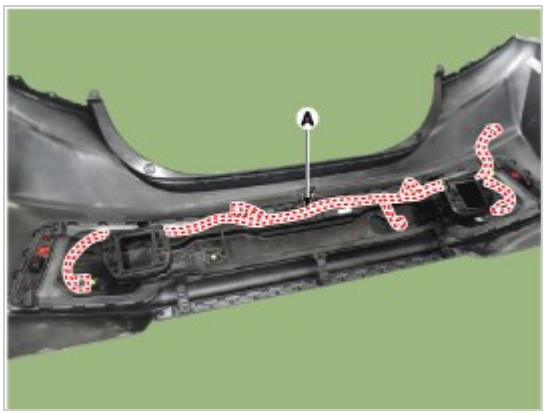

3. Loosen the mounting bolts and remove the smart key antenna (A).

4. After loosening the mounting clips, remove the rear bumper beam assembly (A).

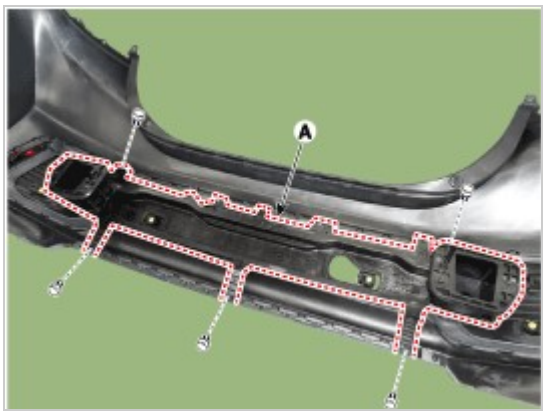

5. To install, reverse the removal procedure.

Information

- Make sure the connector is plugged in properly.
- Replace any damaged clips (or pin-type retainers).

Body (Interior and Exterior)

Components

[General Type]

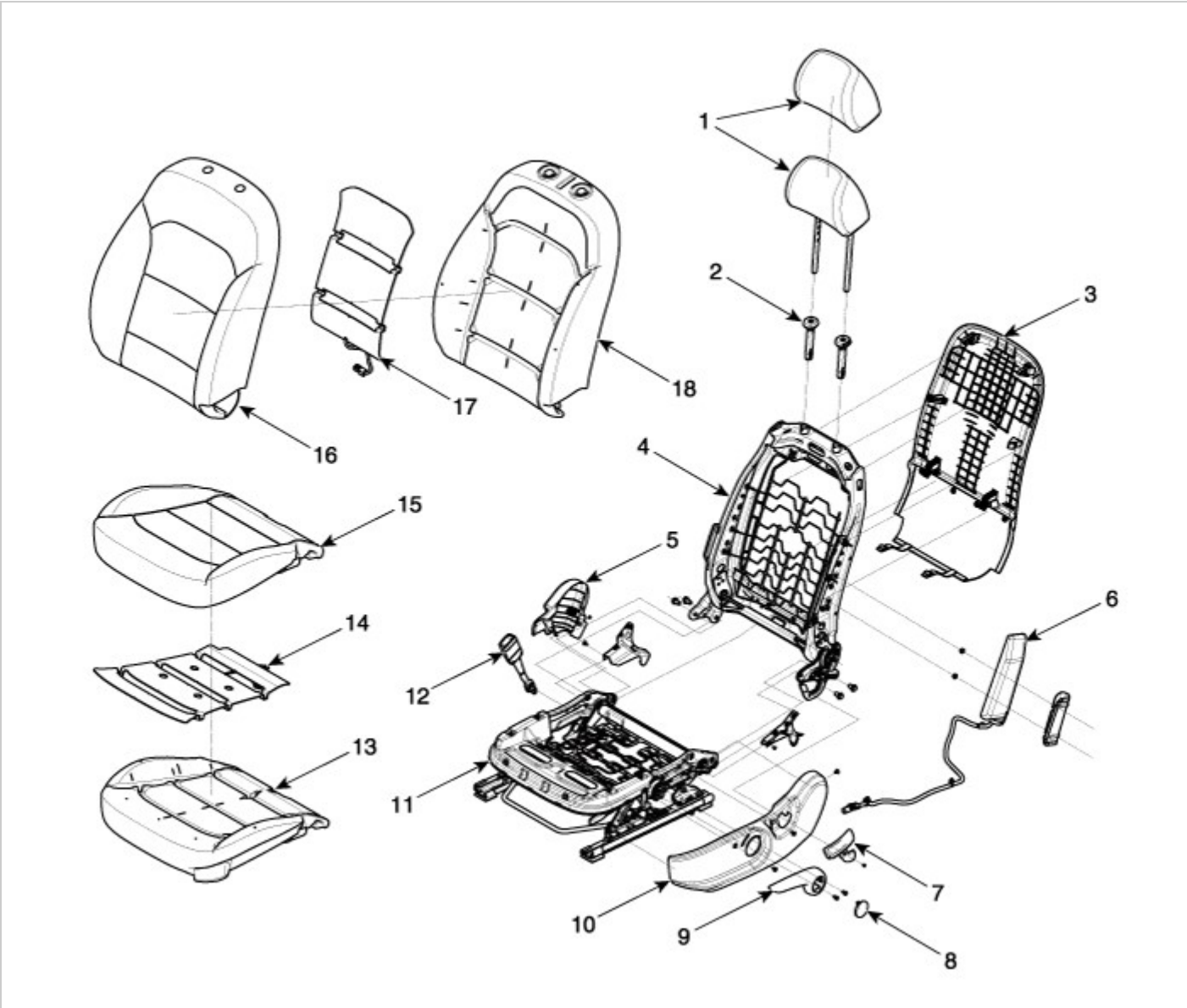

1. Front seat headrest
2. Front seat headrest guide
3. Front seat back board
4. Front seat back frame assembly
5. Front seat shield inner cover
6. Front seat SAB module
7. Recliner lever
8. Height lever cap
9. Height lever
10. Front seat shield outer cover
11. Front seat cushion frame assembly
12. Front seat belt buckle
13. Front seat cushion pad
14. Front seat cushion heater mat
15. Front seat cushion cover
16. Front seat back cover
17. Front seat back heater
18. Front seat back pad

[Power Type]

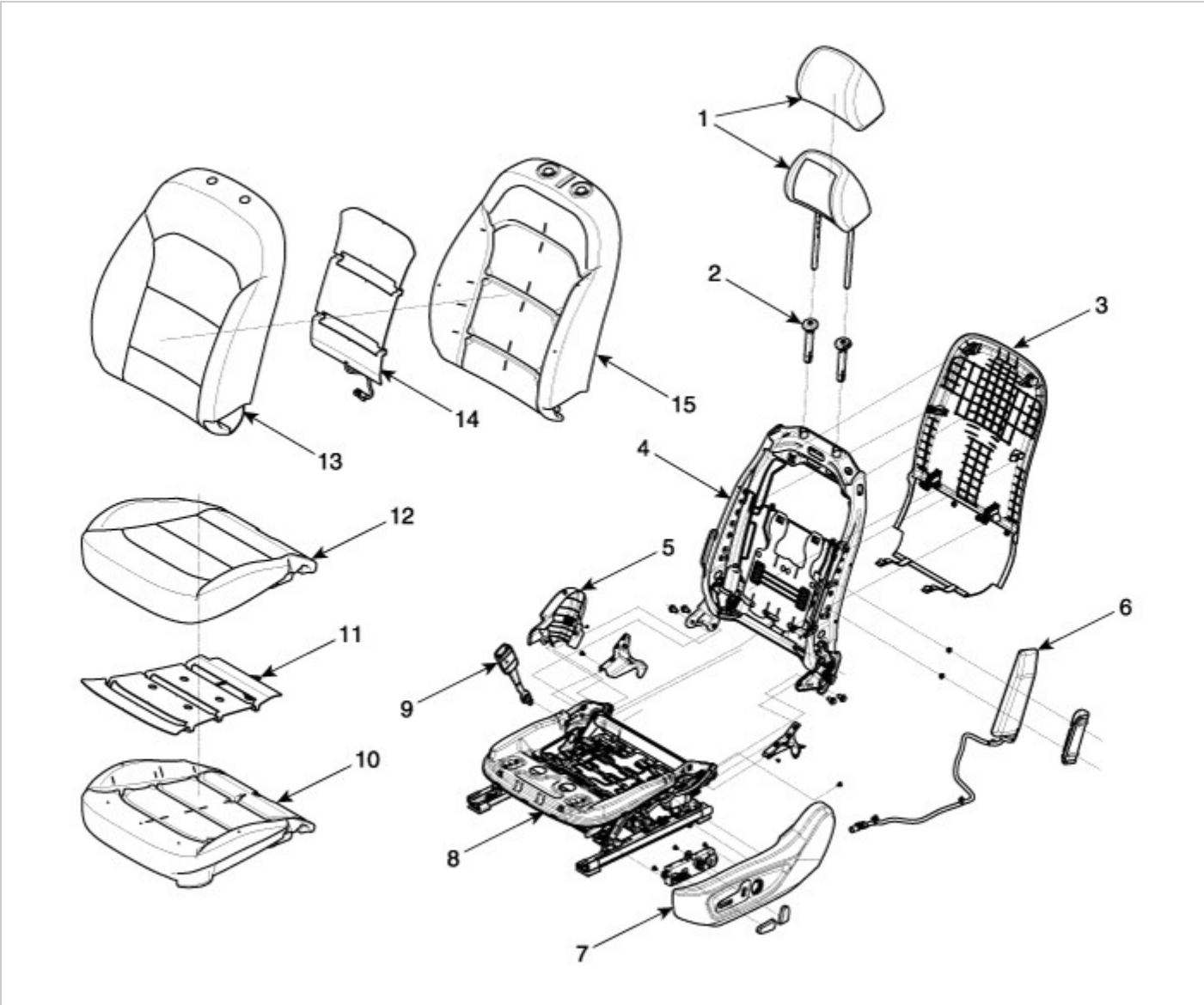

1. Front seat headrest
2. Front seat headrest guide
3. Front seat back board
4. Front seat back frame assembly
5. Front seat shield inner cover
6. Front seat SAB module
7. Front seat shield outer cover
8. Front seat cushion frame assembly
9. Front seat belt buckle
10. Front seat cushion pad
11. Front seat cushion heater mat
12. Front seat cushion cover
13. Front seat back cover
14. Front seat back heater
15. Front seat back pad

Component Location

1. Front seat assembly

Replacement

1. Open the cover and loosen the front seat mounting bolts.
   [Front]

   Tightening torque :
   49.0 - 58.8 N.m (5.0 - 6.0 kgf.m, 36.2 - 43.4 lb-ft)

   [Rear]

2. Disconnect the main connector (A), front seat belt buckle connector (C), airbag connector (B).

3. To install, reverse the removal procedure.

> **Information**
>
> **The installation procedures of seat mounting bolts**
>
> - Push the seat to the rear end of slides and initially tighten the front mounting bolts.
> - Push the seat to the front end of slides and completely tighten the rear mounting bolts.
> - Send the seat to the rear end again to completely tighten the front mounting bolts.
> - Check the seat for smooth movement.
> - For the non-automatic slide seats, check the seats are fixed at each designated fixing position.

Component Location

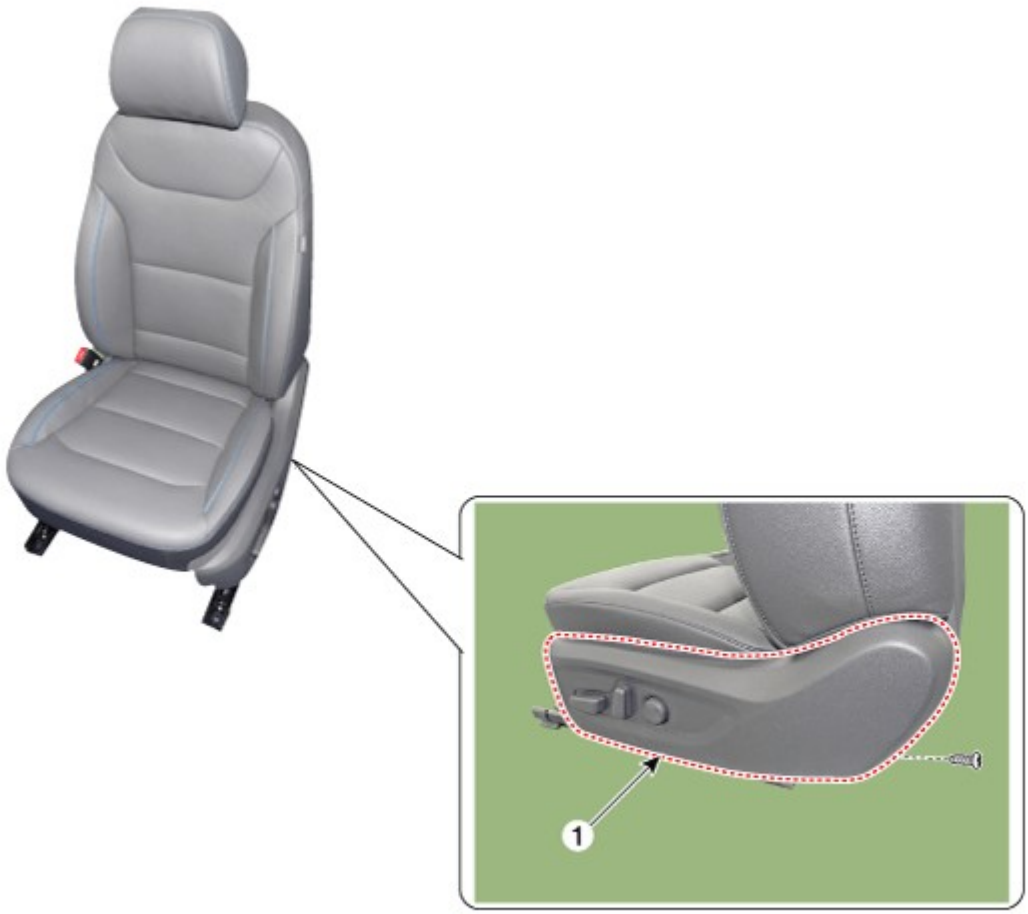

1. Front seat shield outer cover

Replacement

CAUTION

- Put on gloves to prevent hand injuries.

Information

- When removing with a flat-tip screwdriver or remover, wrap protective tape around the tools to prevent damage to components.
- Use a plastic panel removal tool to remove interior trim pieces without marring the surface.
- Take care not to bend or scratch the trim and panels.

1. Remove the front seat shield outer cover (A) by pulling forward in the direction of the arrow using screw driver or remover.

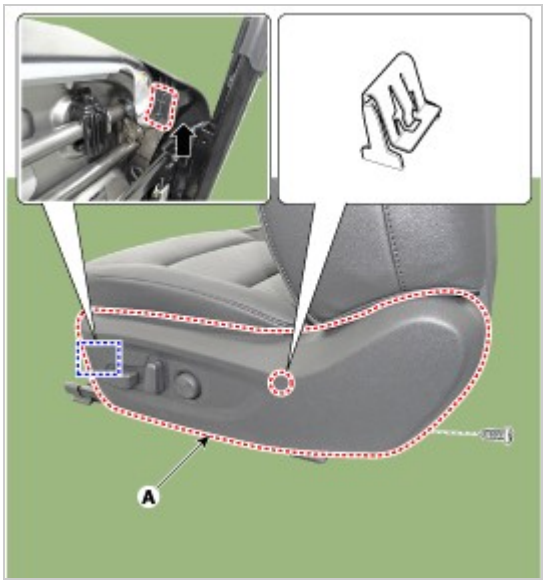

2. Disconnect the front seat power switch connector (A).

3. To install, reverse the removal procedure.

Information

- Make sure the connector is plugged in properly.
- Replace any damaged clips (or pin-type retainers).

Component Location

1. Front seat shield inner cover

Body (Interior and Exterior)

Replacement

CAUTION

- Put on gloves to prevent hand injuries.

NOTICE

- When removing with a flat-tip screwdriver or remover, wrap protective tape around the tools to prevent damage to components.
- Use a plastic panel removal tool to remove interior trim pieces without marring the surface.
- Take care not to bend or scratch the trim and panels.

1. Remove the front seat assembly.
   (Refer to Front Seat - "Front Seat Assembly")
2. Loosen the screws and remove the front seat shield inner cover (A).

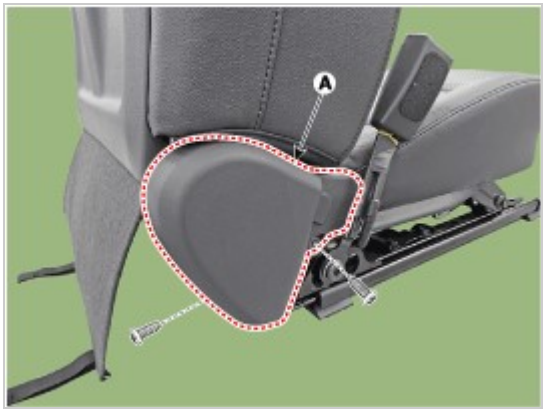

3. To install, reverse the removal procedure.

> **Information**
> - Replace any damaged clips (or pin-type retainers).

Body (Interior and Exterior)

Component Location

1. Front seat back cover

Body (Interior and Exterior)

Replacement

> **CAUTION**
> - Put on gloves to prevent hand injuries.

> **Information**
> - When removing with a flat-tip screwdriver or remover, wrap protective tape around the tools to prevent damage to components.
> - Use a plastic panel removal tool to remove interior trim pieces without marring the surface.
> - Take care not to bend or scratch the trim and panels.

1. Remove the front seat assembly.
   (Refer to Front Seat - "Front Seat Assembly")
2. Remove the front seat shield outer cover.

(Refer to Front Seat - "Front Seat Shield Outer Cover")

3. Remove the front seat shield inner cover.
   (Refer to Front Seat - "Front Seat Shield Inner Cover")
4. Remove the front seat lower protector (A).

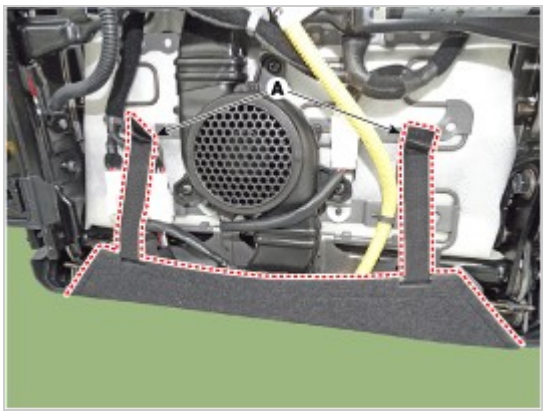

5. Loosen the mounting clip and remove the airbag wiring (A).

6. Push the lock pin, remove the front seat headrest (A).

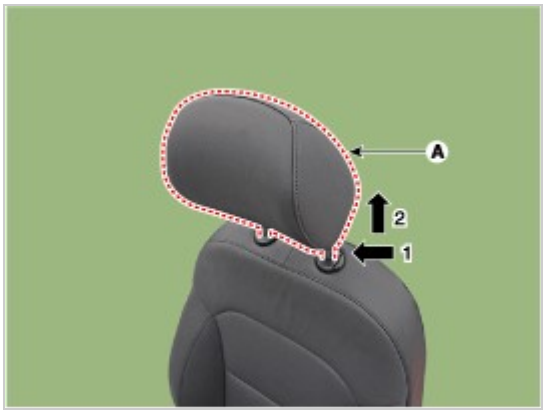

7. Remove the front seat back board (A).
   (1) Seperate the upper back cover by pushing the lock pin in the direction of the arrow.
   (2) Remove the front seat back cover by lifting in the direction.

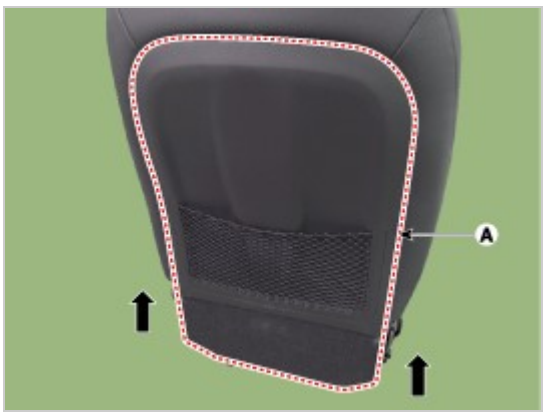

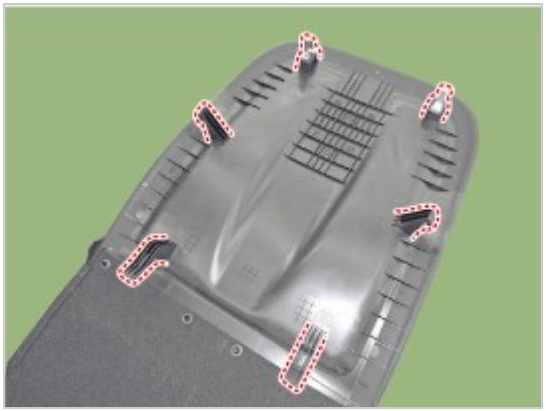

8. Turn the front seat back cover inside out. Then pull out the headrest guides (A) while pinching both side of the lower part of the guides, and remove them.

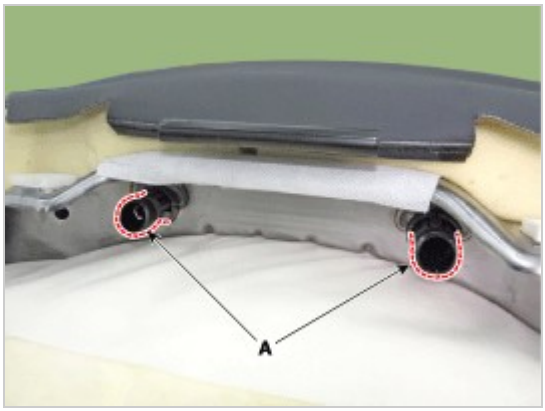

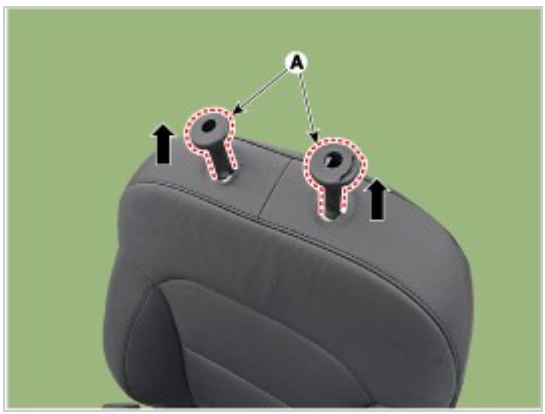

9. Disconnect the front air ventilation duct (A).
[Upper]

[Lower]

10. Remove the protector (A) from the front seat back frame.

11. Remove the front seat back cover assembly (A) from the front seat back frame.

12. After removing the Velcro tape (A) and hog-ring clips (B) inside the front seat back cover, remove the seat back cover (C).

CAUTION

- Be careful not to allow the sponge insert wire to separated in its place.

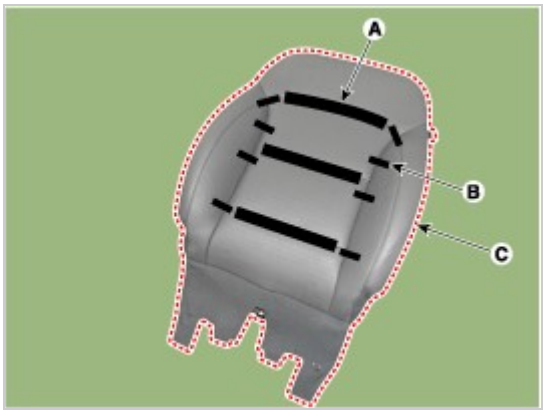

13. To install, reverse the removal procedure.

Information

- Make sure that the connectors are connected completely
- Replace any damaged clips (or pin-type retainers).
- To prevent wrinkles, make sure that the cover (B) is stretched evenly before connecting the hog-ring clips (A).
- Replace the hog-ring clips with new ones using special tool (C) (09880-4F000).

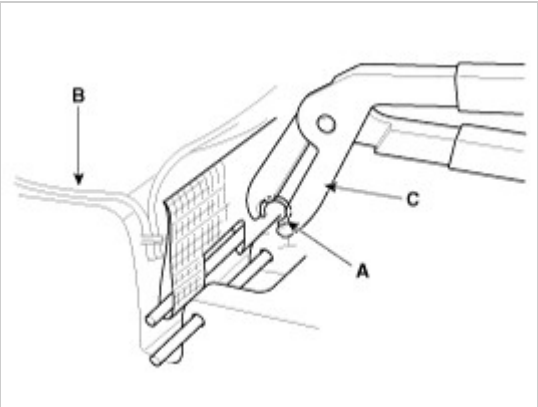

Body (Interior and Exterior)

Component Location

1. Front seat cushion cover

Body (Interior and Exterior)

Replacement

CAUTION

- Put on gloves to prevent hand injuries.

NOTICE

- When removing with a flat-tip screwdriver or remover, wrap protective tape around the tools to prevent damage to components.
- Use a plastic panel removal tool to remove interior trim pieces without marring the surface.
- Take care not to bend or scratch the trim and panels.

1. Remove the front seat assembly.
   (Refer to Front Seat - "Front Seat Assembly")
2. Remove the front seat shield inner cover.
   (Refer to Front Seat - "Front Seat Inner Cover")
3. Remove the front seat shield outer cover.
   (Refer to Front Seat - "Front Seat Outer Cover")
4. Remove the front seat lower protector (A).

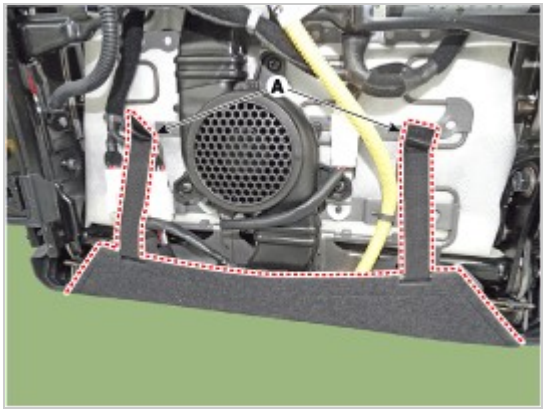

5. Separate the clip and remove the air ventilation duct (A).

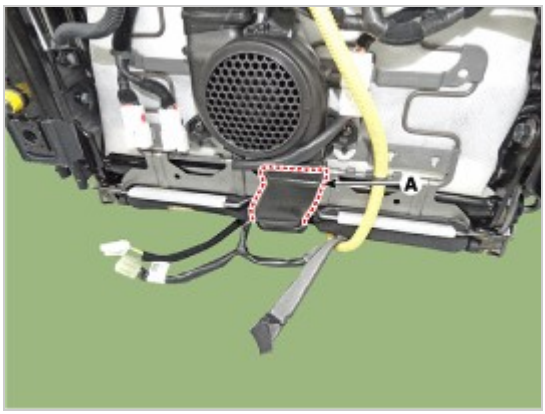

6. Disconnect the front seat motor connectors (A).

7. Remove the protector (A) from the front seat cushion frame.
[Center]

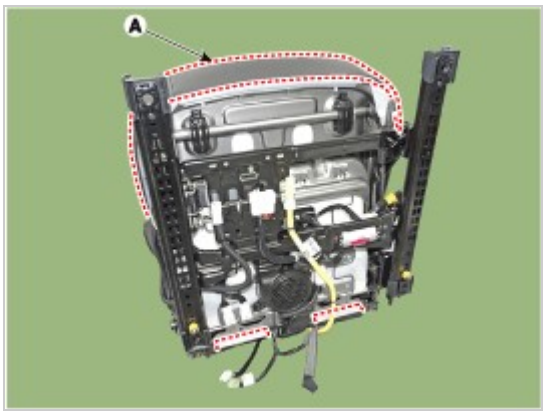

[LH]

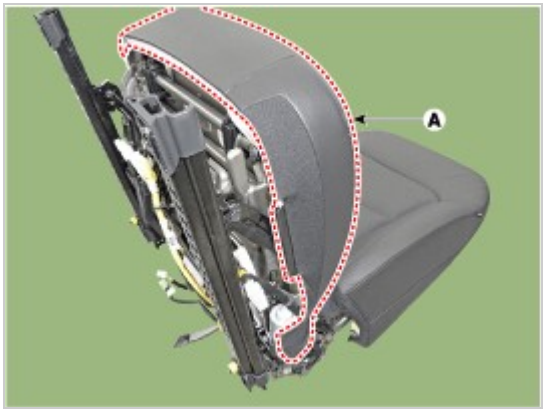

[RH]

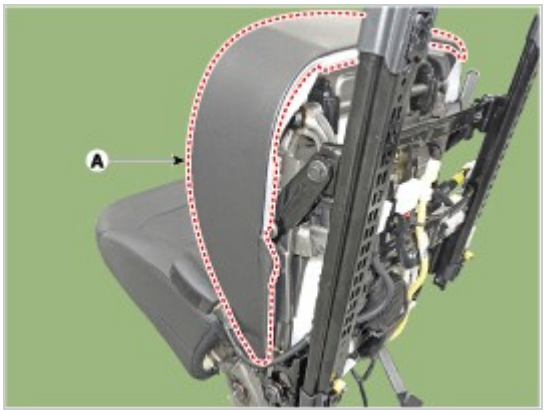

8. Remove the front seat cushion cover (A) from the front seat cushion frame.

9. After removing the Velcro tape (A) and hog-ring clips (B) inside the front seat cushion cover, remove the seat cushion cover (C).

⚠ CAUTION

- Be careful not to allow the sponge insert wire to separated in its place.

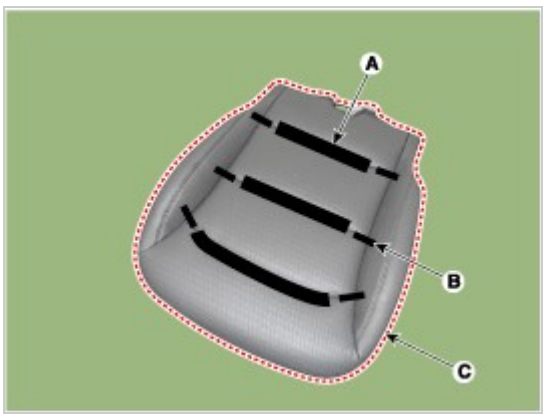

10. To install, reverse the removal procedure.

Information

- Make sure that the connectors are connected completely
- Replace any damaged clips (or pin-type retainers).
- To prevent wrinkles, make sure that the cover (B) is stretched evenly before connecting the hog-ring clips (A).
- Replace the hog-ring clips with new ones using special tool (C) (09880-4F000).

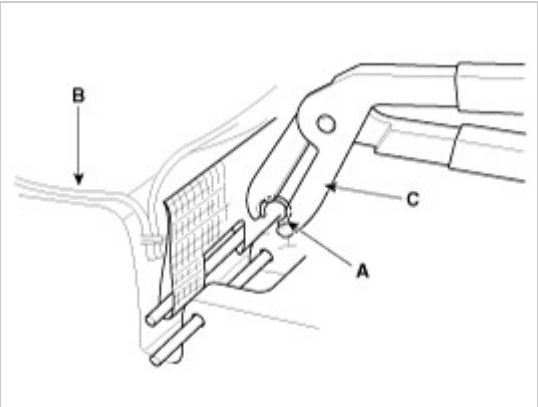

Body (Interior and Exterior)

Component Location

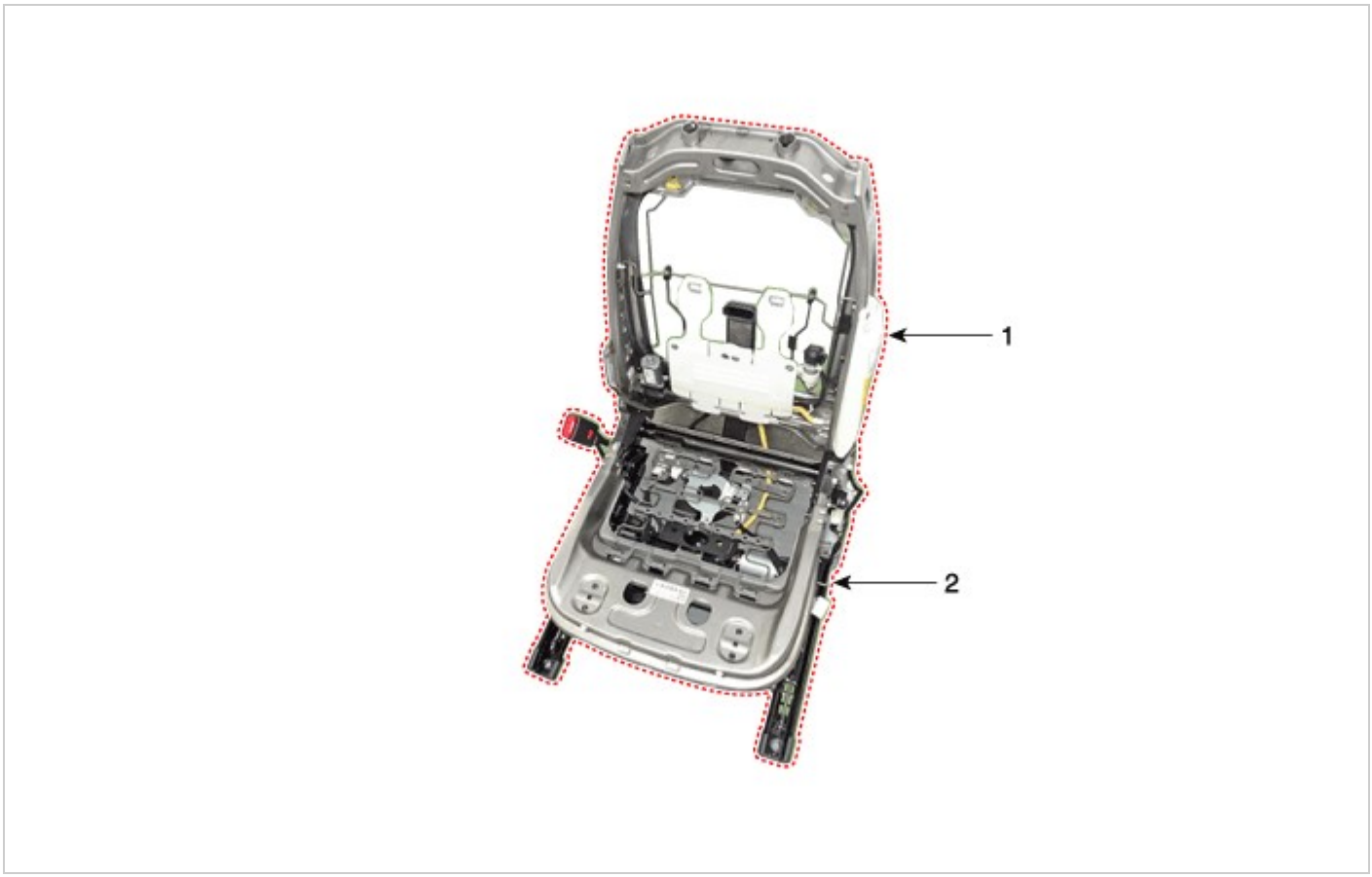

1. Front seat back frame assembly
2. Front seat cushion frame assembly

Body (Interior and Exterior)

Replacement

CAUTION

- Put on gloves to prevent hand injuries.

NOTICE

- When removing with a flat-tip screwdriver or remover, wrap protective tape around the tools to prevent damage to components.
- Use a plastic panel removal tool to remove interior trim pieces without marring the surface.
- Take care not to bend or scratch the trim and panels.

1. Remove the front seat back cover.
   (Refer to Front Seat - "Front Seat Back Cover")
2. Remove the front seat cushion cover.
   (Refer to Front Seat - "Front Seat Cushion Cover")
3. Remove the side airbag (SAB) module.

(Refer to Airbag Module - "Side Airbag (SAB) Module")

4. Remove the lumbar support assembly.
   (Refer to Body Electrical System - "Lumbar Support Unit")
5. After loosening the mounting bolts, detach the front seat back frame assembly (A) from the front seat cushion frame assembly (B).

   Tightening torque :
   44.1 - 53.9 N.m (4.5 - 5.5 kgf.m, 32.5 - 39.8 lb-ft)

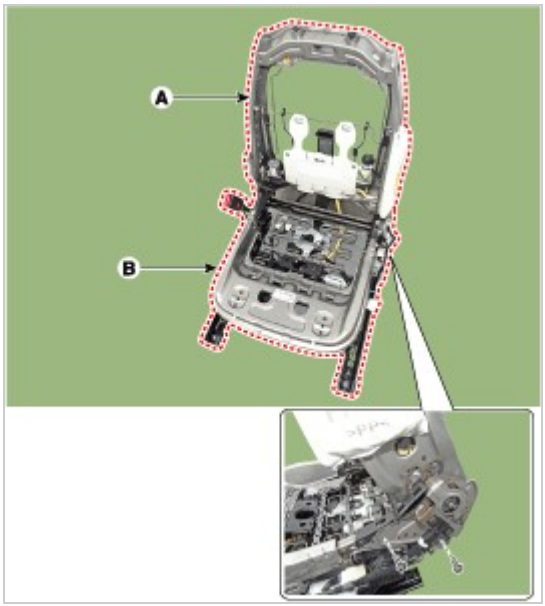

6. To install, reverse the removal procedure.

Information

- For the seat equipped with side airbag, remove the side airbag from the seat frame assembly.
  (Refer to Restraint - "Side Airbag (SAB) Module")
- Before service, be fully aware of precautions and service procedure relevant to air bag.
  (Refer to Restraint - "Side Airbag (SAB) Module")

Body (Interior and Exterior)

Components

1. Rear seat back assembly [LH]
2. Rear seat back assembly [RH]
3. Rear back armrest
4. Rear seat cushion assembly

Component Location

1. Rear seat cushion assembly
2. Rear seat back assembly

Replacement

[Rear seat cushion assembly]

1. Loosen the mounting bolts, remove the rear seat cushion assembly (A).

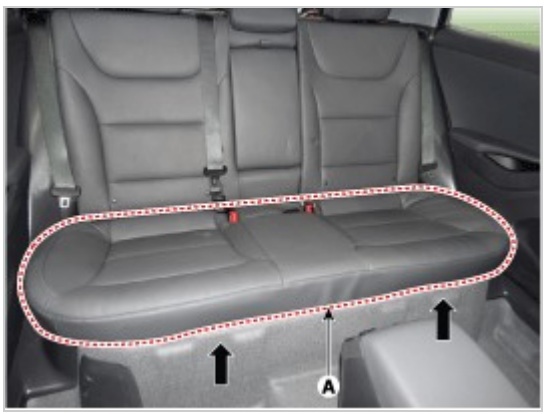

2. Disconnect the rear seat cushion extension connector (A).

3. To install, reverse the removal procedure.

[Rear seat back assembly]

1. Remove the rear seat cushion assembly.
   (Refer to Rear Seat - "Rear Seat Assembly")
2. Fold the rear seat back assembly (A) by pulling the folding lever in the direction of the arrow.

3. After loosening the mounting bolts, remove the rear seat assembly (A).

Tightening torque :
16.7 - 25.5 N.m (1.7 - 2.6 kgf.m, 12.3 - 18.8 lb-ft)

4. To install, reverse the removal procedure.

Body (Interior and Exterior)

Component Location

1. Rear seat back cover [LH]
2. Rear seat back cover [RH]

Body (Interior and Exterior)

Replacement

[LH]

CAUTION

- Put on gloves to prevent hand injuries.

Information

- When removing with a flat-tip screwdriver or remover, wrap protective tape around the tools to prevent damage to components.
- When removing the interior trim pieces, use a plastic panel removal tool not to damage the surface.
- Take care not to bend or scratch the trim and panels.

1. Remove the rear seat assembly [LH].
   (Refer to Rear Seat - "Rear Seat Assembly")
2. Push the lock pins, and remove the rear seat headrest (A).

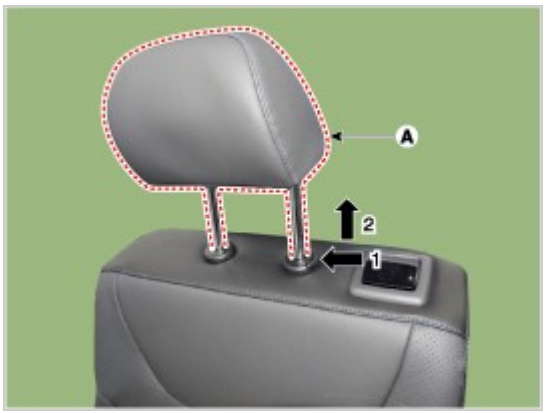

3. Using a screwdriver or remover, remove the rear seat folding bezel (A).

4. Using a screwdriver or remover, remove the teddy anchor garnish (A).

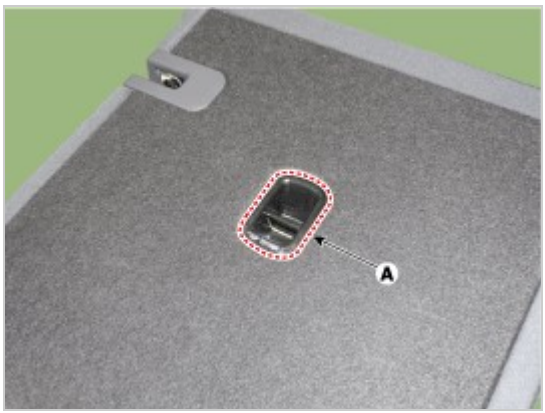

5. After loosening the mounting screws, remove the rear seat back latch cover (A).

6. Using a screwdriver or remover, remove the cap (A).

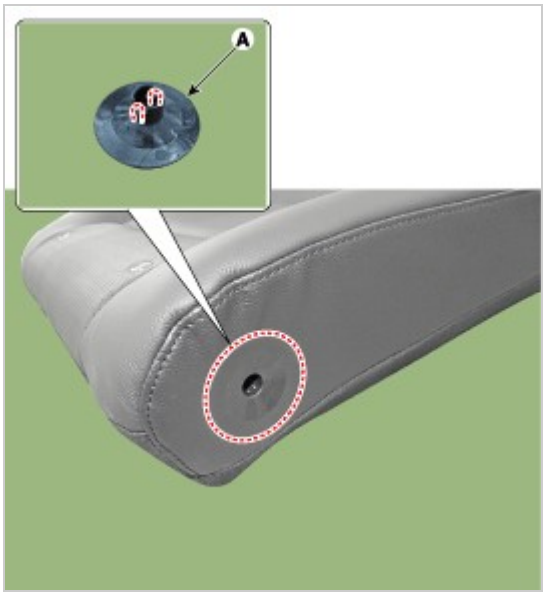

7. Using a screwdriver or remover, remove the rear seat back cover (A).

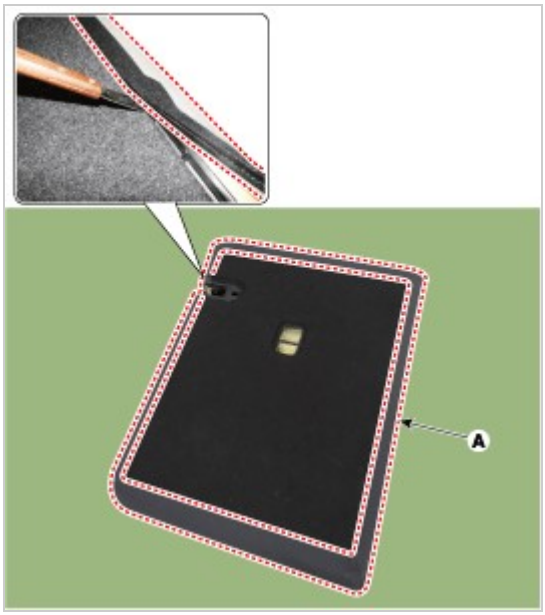

8. Pull out the rear seat headrest guides (A) while pinching both sides of the lower part of the guides, and remove them.

9. Remove the rear seat back cover assembly (A) from the rear seat back frame.

10. After removing the Velcro tape (A) and hog-ring clips (B) inside the rear seat cushion cover, remove the seat cushion cover (C).

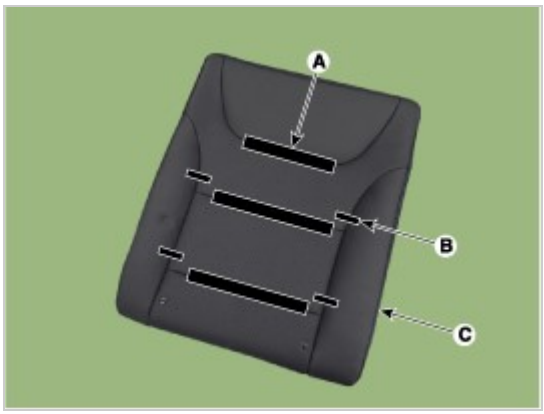

11. To install, reverse the removal procedure.

Information

- Make sure that the connectors are connected completely
- Replace any damaged clips (or pin-type retainers).
- To prevent wrinkles, make sure that the cover (B) is stretched evenly before connecting the hog-ring clips (A).
- Replace the hog-ring clips with new ones using special tool (C) (09880-4F000).

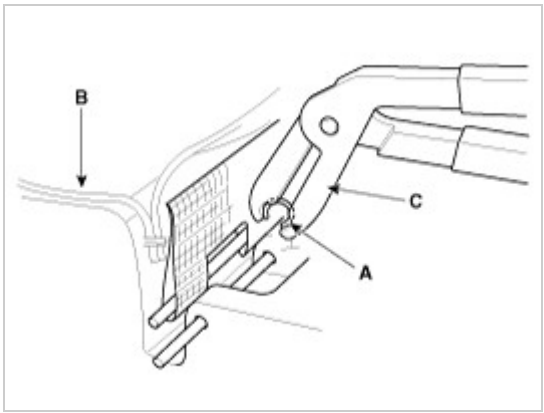

[RH]

CAUTION

- Put on gloves to prevent hand injuries.

NOTICE

- When removing with a flat-tip screwdriver or remover, wrap protective tape around the tools to prevent damage to components.
- When removing the interior trim pieces, use a plastic panel removal tool not to damage the surface.
- Take care not to bend or scratch the trim and panels.

1. Remove the rear seat assembly [RH].
   (Refer to Rear Seat - "Rear Seat Assembly")
2. Remove the rear back armrest.
   (Refer to Rear Seat - "Rear Back Armrest")
3. Push the lock pins, and remove the rear seat headrest (A).

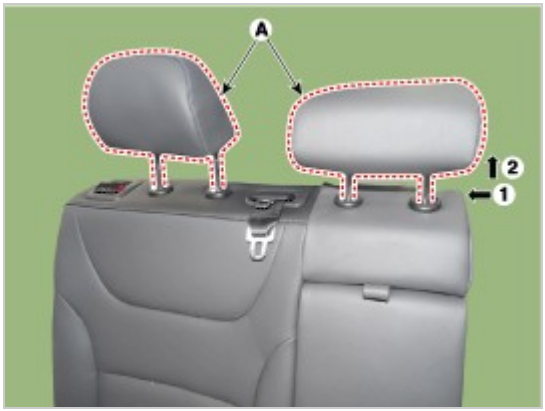

4. Remove the rear seat armrest board (A).

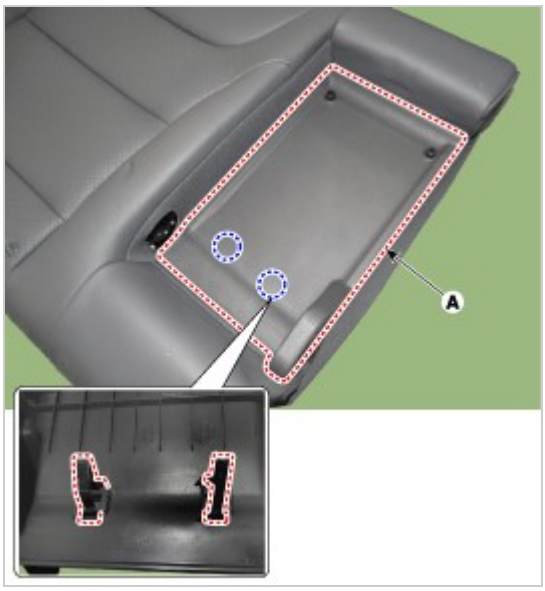

5. Using a screwdriver or remover, remove the cap (A).

6. Using a screwdriver or remover, remove the rear seat folding bezel (A).

7. Using a screwdriver or remover, remove the rear seat belt center cover (A).

8. Using a screwdriver or remover, remove the teddy anchor garnish (A).

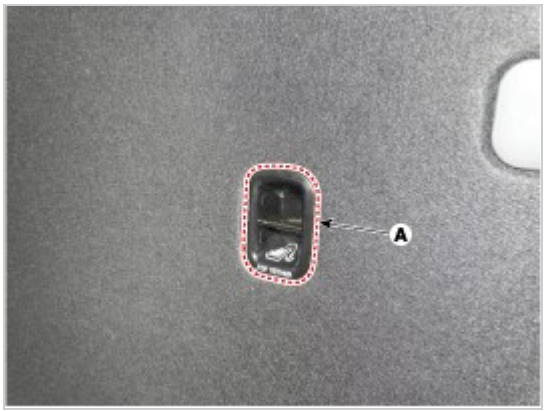

9. After loosening the mounting screws, remove the rear seat back latch cover (A).

10. Using a screwdriver or remover, remove the rear seat back cover (A).

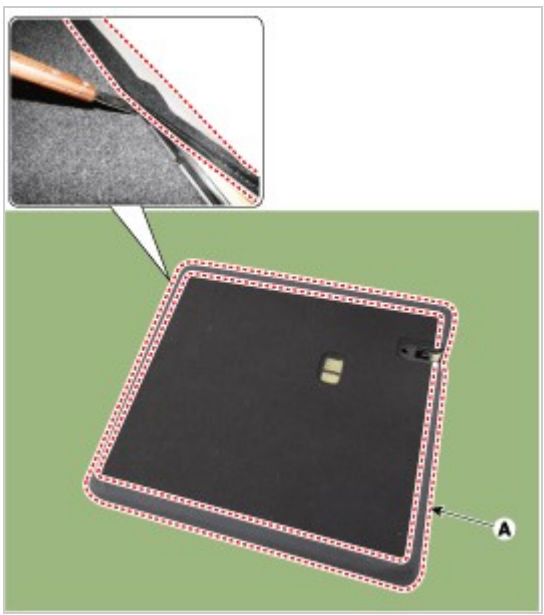

11. Pull out the rear seat headrest guides (A) while pinching both sides of the lower part of the guides, and remove them.

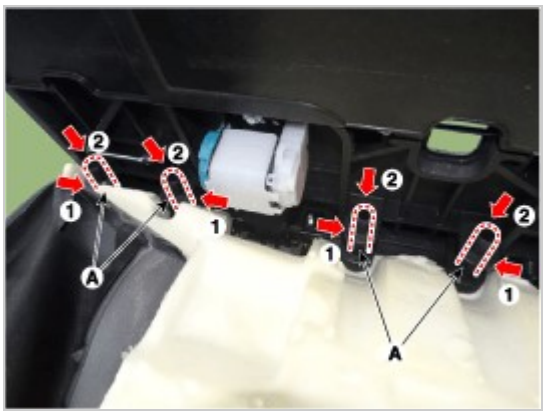

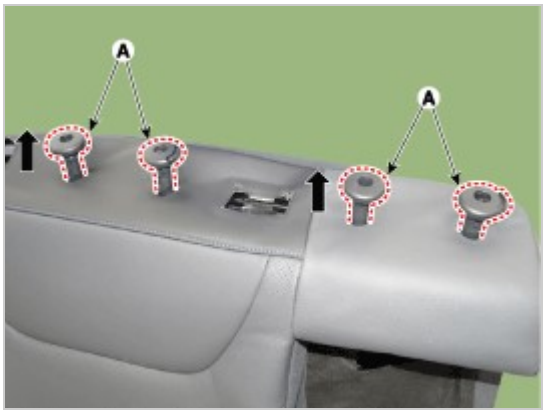

12. Remove the rear seat back cover assembly (A) from the rear seat back frame.

13. After removing the Velcro tape (A) and hog-ring clips (B) inside the rear seat cushion cover, remove the seat cushion cover (C).

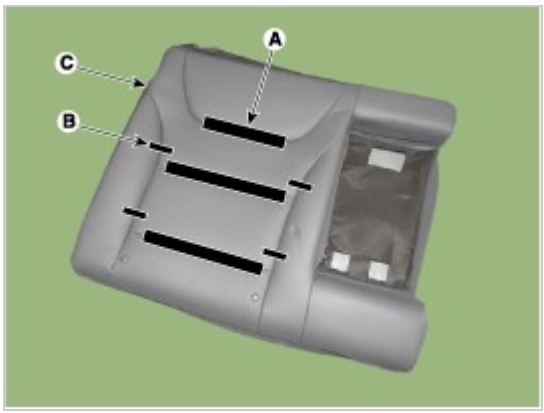

14. To install, reverse the removal procedure.

Information

- Make sure that the connectors are connected completely.
- Replace any damaged clips (or pin-type retainers).
- To prevent wrinkles, make sure that the cover (B) is stretched evenly before connecting the hog-ring clips (A).
- Replace the hog-ring clips with new ones using special tool (C) (09880-4F000).

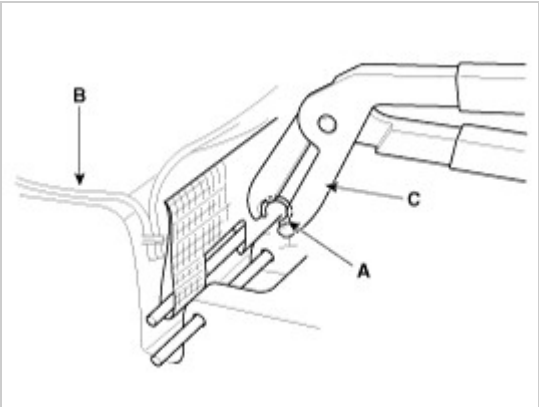

Body (Interior and Exterior)

Component Location

1. Rear seat cushion cover

Body (Interior and Exterior)

Replacement

CAUTION

- Put on gloves to prevent hand injuries.

NOTICE

- When removing with a flat-tip screwdriver or remover, wrap protective tape around the tools to prevent damage to components.
- When removing the interior trim pieces, use a plastic panel removal tool not to damage the surface.
- Take care not to bend or scratch the trim and panels.

1. Remove the seat cushion assembly.
   (Refer to Rear Seat - "Rear Seat Assembly")
2. After removing the Velcro tape (A) and hog-ring clips (B) inside the rear seat cushion cover, remove the seat cushion cover (C).
   [Front side]

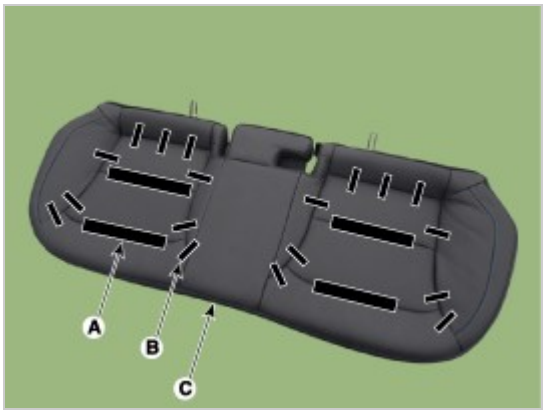

   [Rear side]

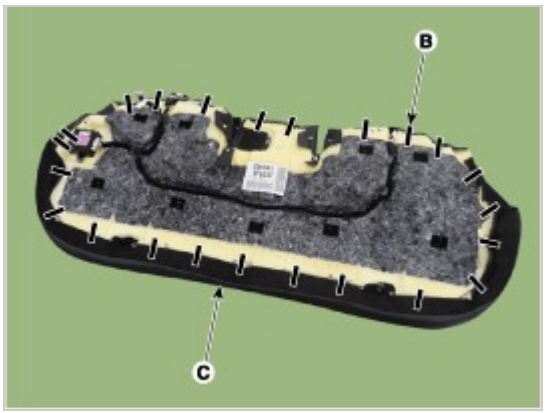

3. To install, reverse the removal procedure.

Information

- Make sure that the connectors are connected completely.
- Replace any damaged clips (or pin-type retainers).
- To prevent wrinkles, make sure that the cover (B) is stretched evenly before connecting the hog-ring clips (A).
- Replace the hog-ring clips with new ones using special tool (C) (09880-4F000).

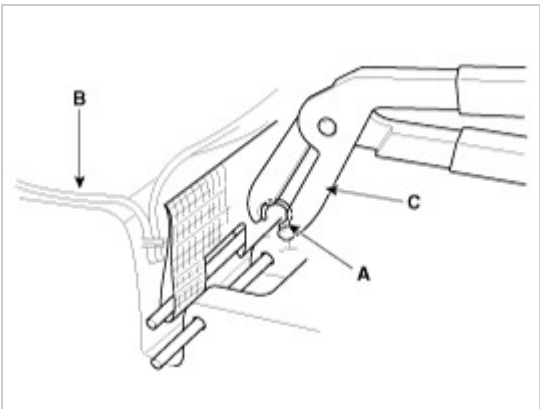

Body (Interior and Exterior)

Replacement

Information

- When removing with a flat-tip screwdriver or remover, wrap protective tape around the tools to prevent damage to components.
- Use a plastic panel removal tool to remove interior trim pieces without marring the surface.
- Take care not to bend or scratch the trim and panels.

1. Remove the rear seat back assembly [LH].
   (Refer to Rear Seat - "Rear Seat Assembly")
2. Separate the rear back armrest (A) after removing the cap and then loosening the bolt.

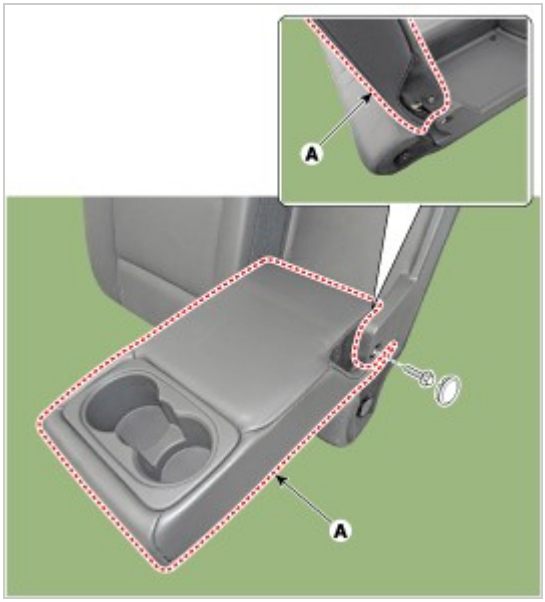

3. To install, reverse the removal procedure.

Body (Interior and Exterior)

Components

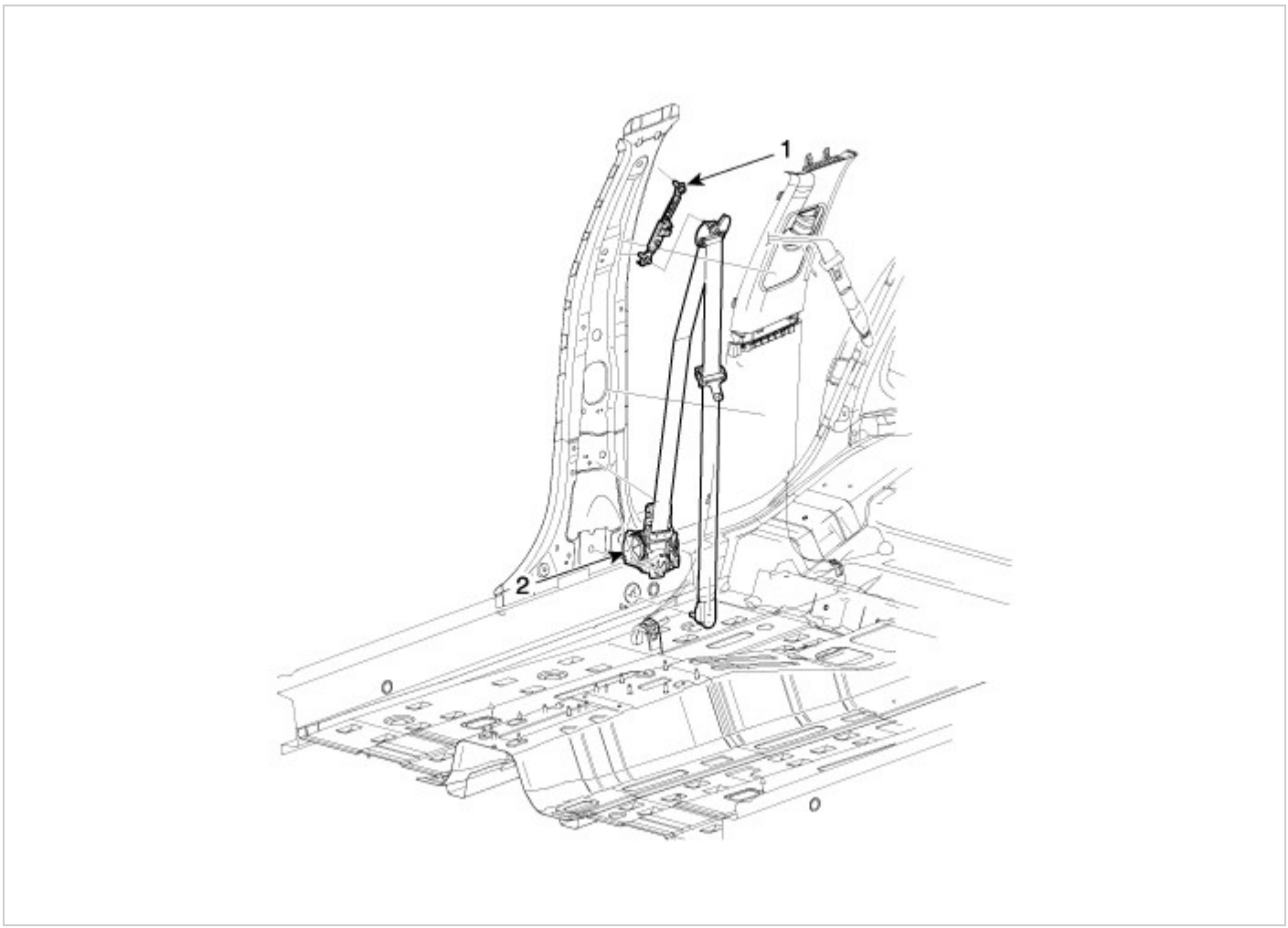

1. Height adjust
2. Front seat belt pretensioner

Body (Interior and Exterior)

Component Location

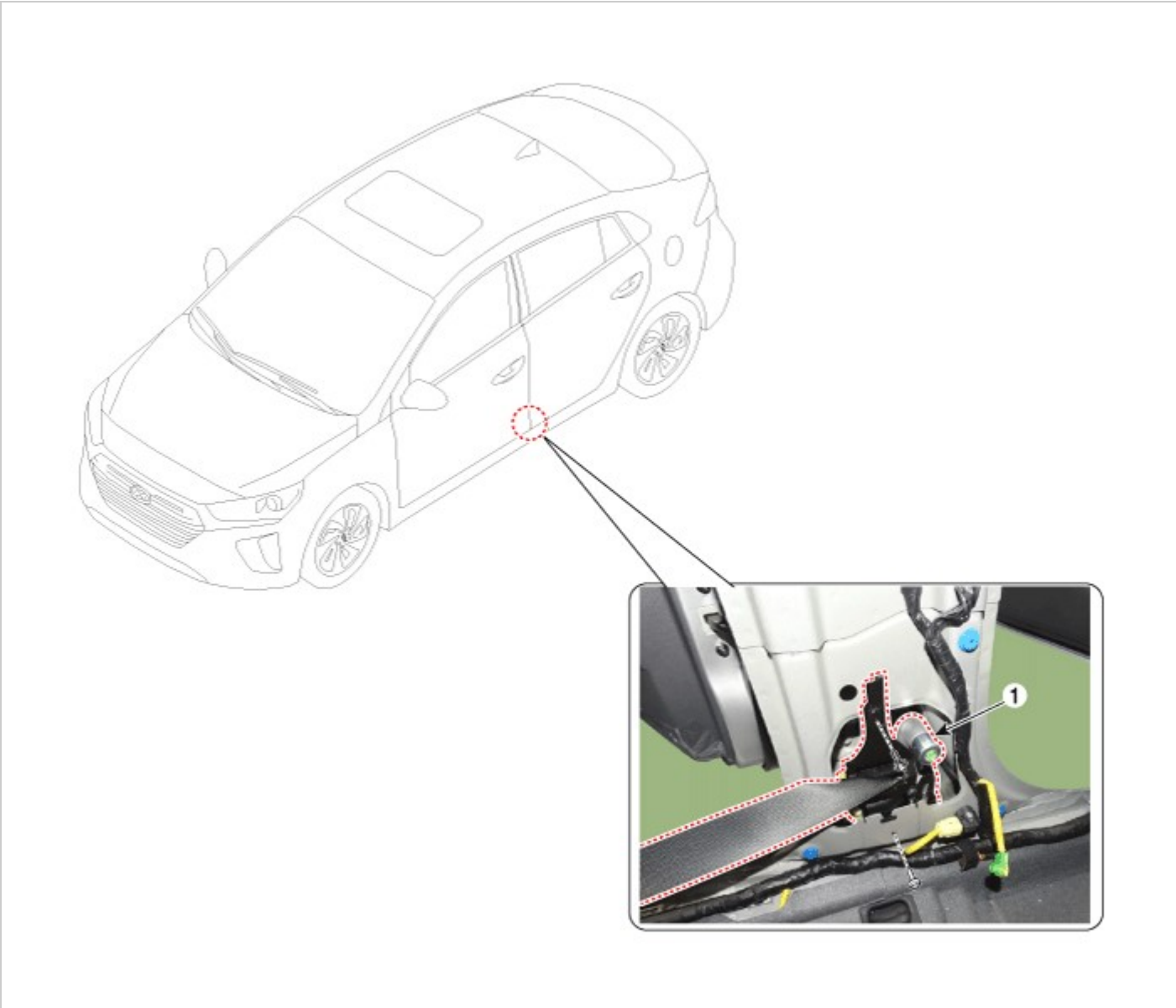

1. Front seat belt pretensioner

Replacement

NOTICE

- When installing the belt, make sure not to damage the pretensioner.

1. Remove the center pillar upper trim.
   (Refer to Interior Trim - "Center Pillar Trim")
2. After loosening the front belt upper anchor mounting bolt, remove the front belt upper anchor (A).

   Tightening torque :
   39.2 - 53.9 N.m (4.0 - 5.5 kgf.m, 28.8 - 39.8 lb-ft)

3. Disconnect the front seat belt pretensioner connector (A)

4. Loosen the mounting bolt and removing the front seat belt pretensioner (A).

Tightening torque :
39.2 - 53.9 N.m (4.0 - 5.5 kgf.m, 28.8 - 39.8 lb-ft)

5. To install, reverse the removal procedure.

Information

- After installing the front seat belt retractor, check that the air bag warning indicator illuminates for about 6 seconds when the ignition is ON and then goes out.
- Make sure the connector is plugged in properly.
- Replace any damaged clips (or pin-type retainers).

Body (Interior and Exterior)

Component Location

1. Height adjust

Replacement

1. Remove the front seat belt upper anchor.
   (Refer to Front Seat Belt - "Front Seat Belt Pretensioner")
2. After loosening the mounting bolts, remove the height adjust (A).

   Tightening torque :
   39.2 - 53.9 N.m (4.0 - 5.5 kgf.m, 28.9 - 39.8 lb-ft)

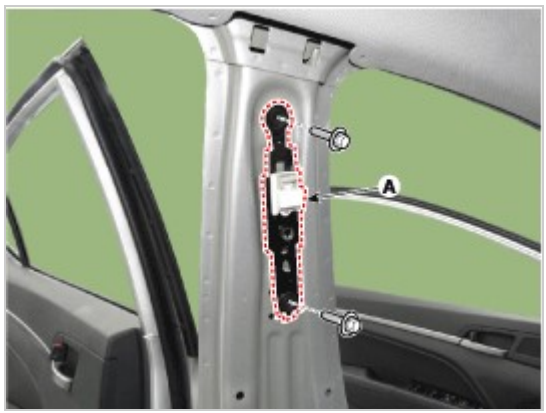

3. To install, reverse the removal procedure.

Information

- Replace any damaged clips (or pin-type retainers).

Component Location

1. Front seat belt buckle

Replacement

1. Remove the front seat assembly.
   (Refer to Front Seat - "Front Seat Assembly")
2. Disconnect the front seat belt buckle connector wiring (A).

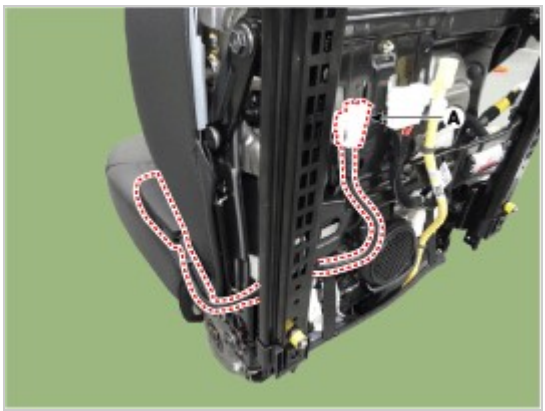

3. After loosening the mounting bolt, remove the front seat belt buckle (A).

Tightening torque :
39.2 - 53.9 N.m (4.0 - 5.5 kgf.m, 28.9 - 39.8 lb-ft)

4. To install, reverse the removal procedure.

> **Information**
> - Make sure the connector is plugged in properly.

Body (Interior and Exterior)

Components

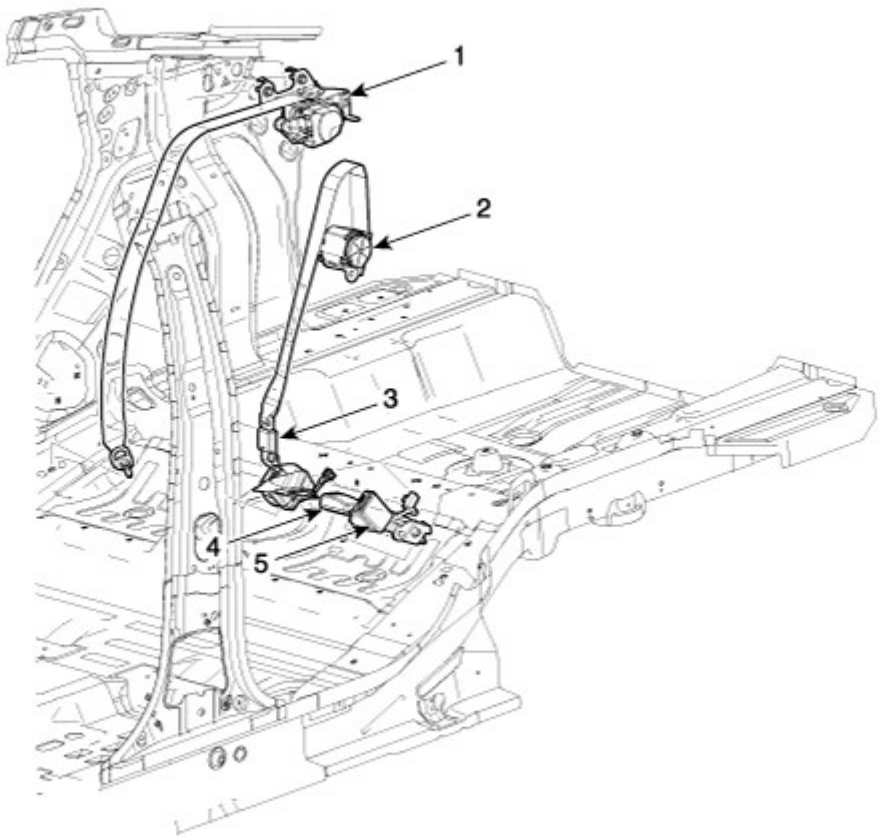

1. Rear seat belt retractor
2. Rear center seat belt retractor
3. Center seat belt
4. Rear seat belt buckle
5. Rear seat belt buckle [LH]

Body (Interior and Exterior)

Component Location

1. Rear seat belt retractor

Replacement

NOTICE

- When installing the belt, make sure not to damage the retractor.

1. Remove the rear pillar trim.
   (Refer to Interior Trim - "Rear Pillar Trim")
2. After loosening the mounting bolt, remove the rear seat belt lower anchor (A).

   Tightening torque :
   39.2 - 53.9 N.m (4.0 - 5.5 kgf.m, 28.8 - 39.8 lb-ft)

3. After loosening the mounting bolts, remove the rear seat belt retractor (A).

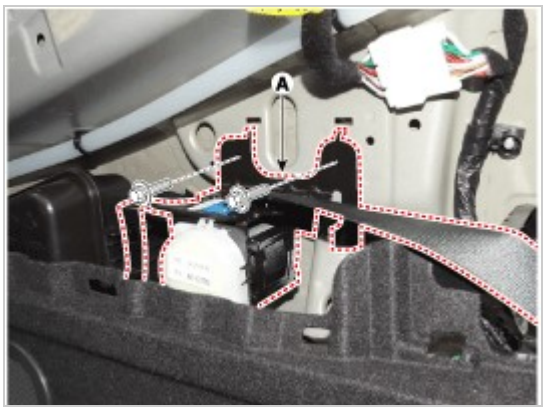

4. To install, reverse the removal procedure.

Information

- Replace any damaged clips (or pin-type retainers).

Component Location

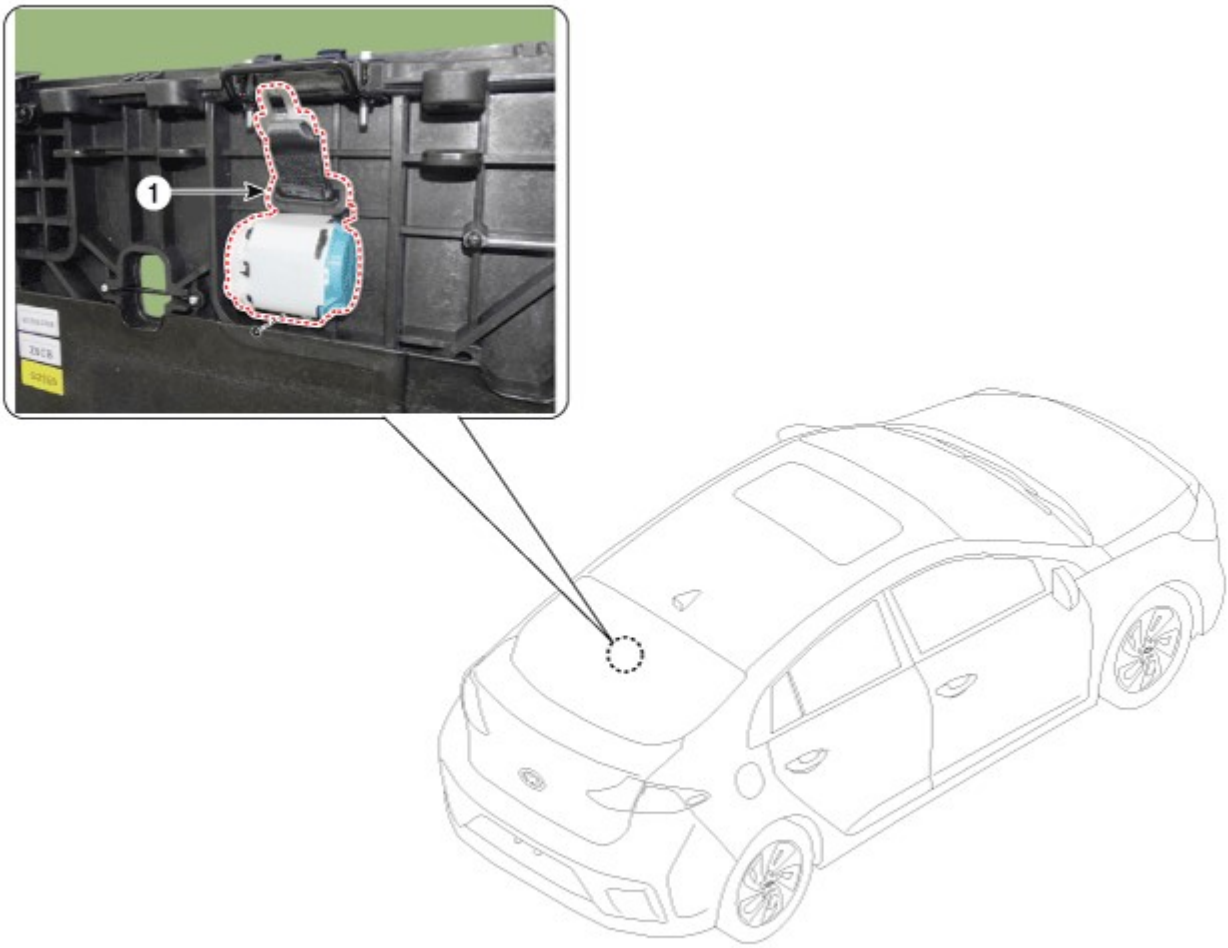

1. Rear center seat belt retractor

Replacement

CAUTION

- When installing the belt, make sure not to damage the retractor.

1. Remove the rear seat back cover.
   (Refer to Rear Seat - "Rear Seat Back Cover")
2. After loosening the mounting bolts, remove the rear center seat belt retractor (A).
   Tightening torque :
   39.2 - 53.9 N.m (4.0 - 5.5 kgf.m, 28.8 - 39.8 lb-ft)

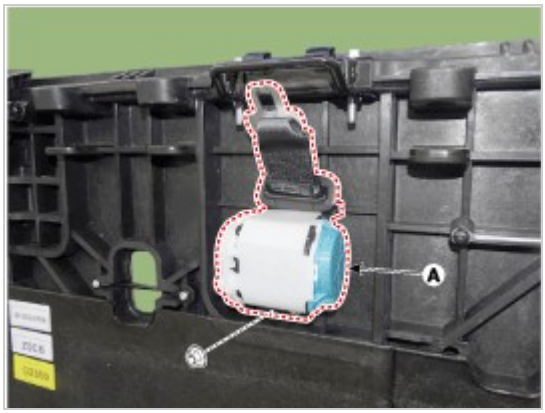

3. To install, reverse the removal procedure.

Information

• Replace any damaged clips.

Component Location

1. Rear seat belt buckle [RH]
2. Rear seat belt buckle [LH]
3. Rear center seat belt buckle

Replacement

1. Remove the rear seat cushion assembly.
   (Refer to Rear Seat - "Rear Seat Cushion Assembly")
2. Loosen the mounting bolt, remove the rear seat belt buckle (A).
   [LH]
   Tightening torque :
   39.2 - 53.9 N.m (4.0 - 5.5 kgf.m, 28.9 - 39.8 lb-ft)

[RH]

Tightening torque :
39.2 - 53.9 N.m (4.0 - 5.5 kgf.m, 28.9 - 39.8 lb-ft)

3. To install, reverse the removal procedure.

Information

- The buckle and tongue of different types are impossible to be latched, so check that the buckle & tongue have the same types.
- Distinguish the rear side seat buckle from the center seat buckle before latching.
- If foreign materials are stuck in the inside button of buckle, it may cause interference during the latching process, leading to a functional problem (for example- beverages (viscous drinks), toothpicks, sand, plastic, vinyl, metal pieces, etc.)
- After latching the buckle and tongue, check the fastening force using a Push-Pull Gauge (fastening force: 3kgf or less).