## Safety Precaution

**Precautions to take before servicing high voltage system**

**DANGER**

- Since hybrid vehicles contain a high voltage battery, if the high voltage system or vehicles are handled incorrectly, this might lead to a serious accidents like electric shock and electric leakage.

**WARNING**

- Be sure to shut off the high voltage by removing the safety plug before performing inspection or repairing the high voltage system.
  (Refer to "High Voltage Shut-off Procedures")
- The responsible worker keeps the removed safety plug to prevent the plug from being connected by mistake.
- Do not keep any metal objects (watch, ring etc.) while working on the high voltage system, which it can cause serious accidents like electric shock.
- Before beginning work on the high voltage system, the worker should wear personal protective equipment to prevent safety accidents.
  (Refer to "Personal Protective Equipment")
- Never allow workers who are not wear personal protective equipment to touch the high voltage system. High voltage components should be covered with an insulation sheet to prevent safety accidents.
- Use insulation tools when working on the high voltage system.
- Put the removed high voltage components on the insulation mat.

**Information**

- All the high voltage wiring and connectors are orange.
- A caution label for high voltage is attached to the high voltage components.
- High voltage components :
  High Voltage Battery Pack Assembly, Power Relay Assembly (PRA), BMS ECU, Hybrid Power Control Unit (HPCU), Hybrid Drive Motor, HSG, Electric A/C Compressor, Low DC/DC Converter (LDC), Power Cable, Electric Compressor etc.

**CAUTION**

- Inform of danger of high voltage by putting the "high voltage caution" on the vehicle as image below.

SAMPLE

DANGER

High Voltage : Do not touch during operation.

Person in charge : _____

Copy this page and put it after folding on the roof of the vehicle in service.

DANGER

High Voltage : Do not touch during operation.

Person in charge : _____

**Personal Protective Equipment**

| Name | Illustration | Description |
|---|---|---|
| Insulation glove | | Used when inspecting or working on the high voltage components<br>[Insulation performance : 1000V / 300A or above] |
| Insulation shoes | | Used when inspecting or working on the high voltage components |

| | | |
|---|---|---|
| Insulation clothes | | Used in the case below<br>• During Removal & installation or inspection of the high voltage battery terminals or wiring, which spark might happen.<br>• During working on the high voltage battery pack assembly. |
| Insulation helmet | 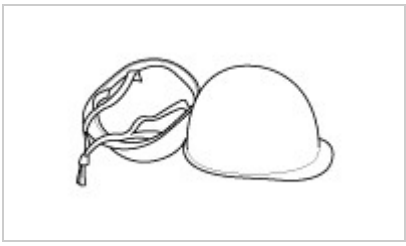 | |
| Safety glasses | | |
| Face shield | | |
| Insulation mat | 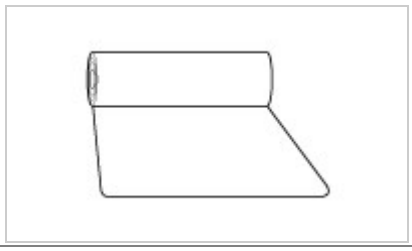 | Putting the removed high voltage components on the insulation mat to prevent safety accidents. |
| Insulation sheet | 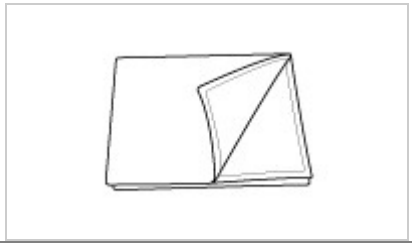 | Covering the high voltage components with insulation sheet to prevent people who don’t wear the personal protective equipment from safety accidents. |

**Precautions to take when handling power cable**

- Immediately insulate the high voltage terminal after reconnecting the terminal (use insulation tape).
- Tighten the high voltage terminal screw to spec torque.
- Be careful that (+) and (-) terminals do not come in contact when connecting or disconnecting power cable and busbar.

**Precautions to take when handling high voltage battery**

- When transporting high voltage battery, be sure to keep it flat and leveled. Failure to do so may decrease the battery performance and/or its life-span.
- High voltage battery"s performance may decrease if it is exposed to high temperature for a lengthy period. As a result, heat-treatment after painting must not exceed 70°C/ 30 minutes, or 80°C/ 20 minutes.

**Precautions in case of fire on high voltage battery system**

- If the fire occurs indoor, ventilate the area to let out hydrogen gas.
- ACB fire extinguisher is recommended for putting out the fire. (water may also be used).

**Precautions in case of high voltage battery gas or electrolyte leakage**

-

Turn OFF the Start button. Keep the Smart Key at least 2 meters away from the vehicle to prevent unintended engine start.

- Gas is hydrogen and alkaline vapor. If the leakage is indoor, ventilate the area immediately and evacuate to a safe location.
- If the leaked liquid comes in contact with skin, immediately neutralize the affected area with boric acid solution, then clean with tap water or saline solution.
- If the leaked vapor or liquid gets in the eye, immediately clean the affected eye with water then get medical attention.
- If the gas leakage is caused by high temperature, then do NOT use the battery until the high voltage battery fully cools down to room temperature.

**Precautions when handling the vehicle after an accident**

- Be sure to wear insulated gloves (or rubber gloves), protective goggles, insulated suite, and insulated boots.
- Do NOT touch bare cable under any condition.
  (Refer to "Precautions when handling power cable")
- In case of vehicle fire, put out the fire with ABC extinguisher. Do NOT use water (usage of large volume of water is okay, but small volume can worsen the situation).
- If more than half of the vehicle is submerged, then do NOT go near the Safety Switch or other high voltage related components. If such a component must be accessed, then move the vehicle to the safe location first before handling the component.
- Gas is hydrogen and alkaline vapor. If the leakage is indoor, ventilate the area immediately and evacuate to a safe location.
- If the leaked liquid comes in contact with skin, immediately neutralize the affected area with boric acid solution, then clean with tap water or saline solution.
- Refer to "High voltage cut-off procedure" if the high voltage needs to be cut off.

**Preparations when servicing the accident vehicle**

- Be sure to wear insulated gloves (or rubber gloves), protective goggles, insulated suite, and insulated boots.
- Boric Acid Power or Solution
- ABC Extinguisher
- Towel for cleaning electrolyte
- Vinyl tape (for insulating terminal)
- Mega ohm tester (for checking high voltage)

**Precautions in case HEV is left unattended for a lengthy period**

- Turn OFF the Start button. Keep the Smart Key at least 2 meters away from the vehicle to prevent unintended engine start.
- We recommend that HEV is driven at least 1 time for over 30 minutes every 2 months to protect and manage the high voltage battery (inquire at relevant team in HMC).
- When inspecting or exchanging the auxiliary battery, check high voltage battery SOC reset related problems.

**Hybrid Vehicle Refrigerant Recovery / Charging Precautions**

- Since the electric compressor uses high-voltage, you should use POE oil which have high Volumetric Resistivity.
- Do not use the same A/C recovery / charging station as conventional belt-driven compressors.

**WARNING**

- If the POE oil of the system gets mixed with PAG oil, then dielectric breakdown due to decreased volumetric Resistivity can occur and inoperative A/C compressor may result, A/C compressor may not work

General Information

## High Voltage Shut-off Procedures

**WARNING**

- Be sure to read and follow the "General Safety Information and Caution" before doing any work related with the high voltage system. Failure to follow the safety instructions may result in serious electrical injuries.
- Be sure to read and follow the "High Voltage Shut-off Procedures" before doing any work related with the high voltage system. Failure to follow the safety instructions may result in serious electrical injuries.

**Information**

- High voltage components :
  High Voltage Battery Pack Assembly, Power Relay Assembly (PRA), BMS ECU, Hybrid Power Control Unit (HPCU), Hybrid Drive Motor, HSG, Electric A/C Compressor, Low DC/DC Converter (LDC), Power Cable, Electric Compressor etc.

1. Turn the ignition switch OFF and disconnect the auxiliary 12V battery negative (-) terminal.

2. Remove the safety plug cover (A).

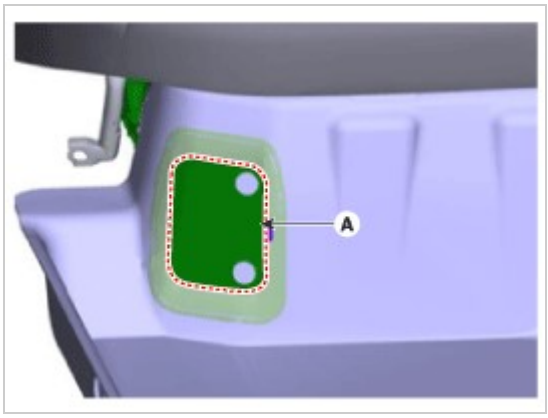


3. Unfasten the hook (A) and then remove the safety plug (C) by pulling the lever (B) to the direction of arrow.

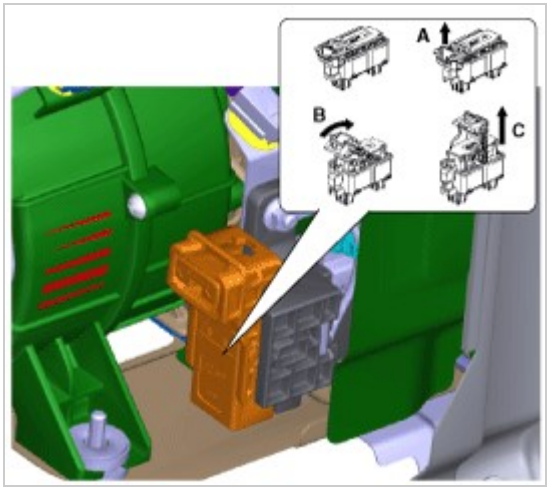


4. Wait for more than 5 minutes so that the capacitor in the high voltage system can be fully discharged.
5. Measure the voltage between the inverter terminals to check that the capacitor in the inverter is discharged completely.
   (1) Remove air cleaner assembly and air duct.
   (Refer to Engine Mechanical System - "Air Cleaner")
   (2) Disconnect the inverter power cable (A).

**Information**

- Disconnect the inverter power cable as the procedures below.

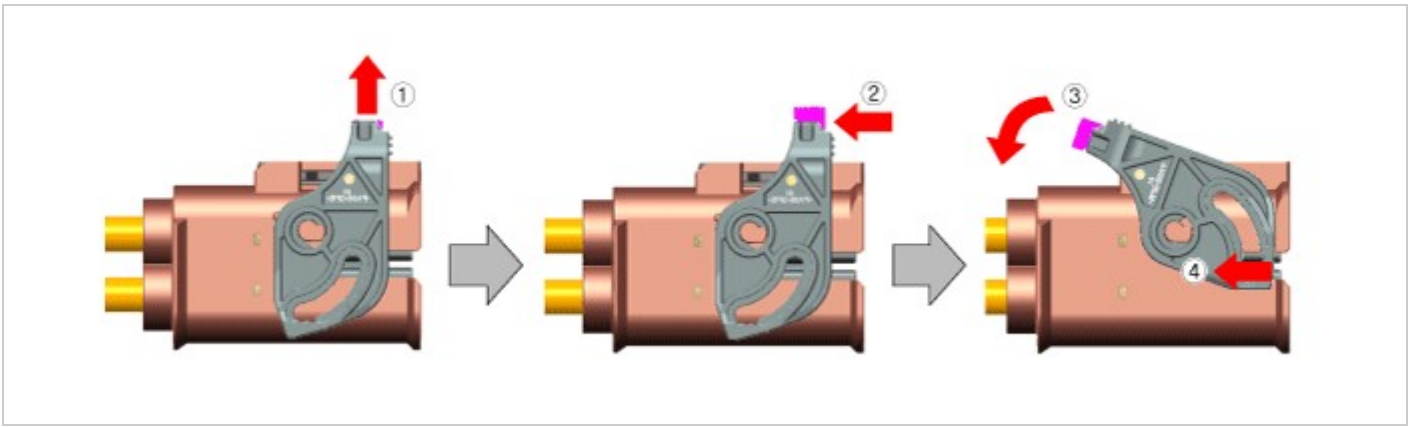

(3) Measure the voltage between the inverter (+) terminal and the inverter (-) terminal.

**Less than 30V : High voltage circuit properly shut**
**More than 30V : Fault on high voltage circuit**

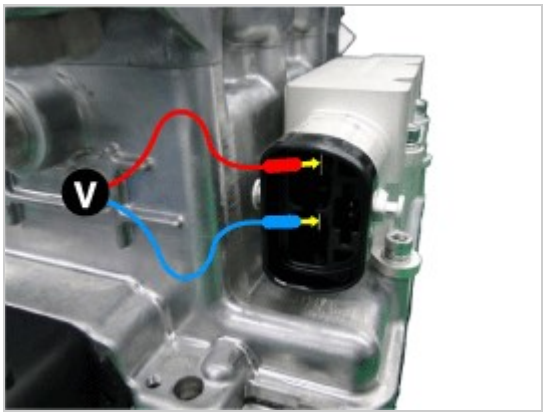


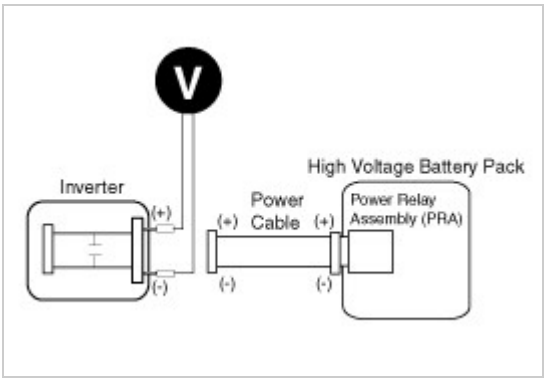


**WARNING**

- If measured more than 30V, check if the safety plug is removed completely.If measured more than 30V despite the safety plug is removed, there can be serious problems on the high voltage circuit. In this case, check DTC and never touch the high voltage system circuits.

**General Information**

## Procedure for entering engine forced activation mode

If the engine needs to be running constantly while the vehicle is stopped to inspect emission gas or perform maintenance on the vehicle, follow below procedure to enter engine forced activation mode.

1. Place the shift lever in P range while the vehicle is stopped. Engage the parking brake. Then follow below procedure and enter engine forced activation mode.

**Information**

- Below procedure [(1) - (5)] for engine forced activation mode must be completed within 60 sec. In case the procedure is not completed within the time, the process is reset and you must start again from step (1).

(1) Do NOT press on the brake pedal and press the Engine Start/Stop button 2 times to enter IG ON mode.

(2) Place the shift lever in P range and then press the accel pedal 2 times.

(3) Place the shift lever in N range and then press the accel pedal 2 times.

(4) Place the shift lever in P range and then press the accel pedal 2 times.

(5) Press on the brake pedal and press the Engine Start/Stop button to start the engine, and maintain idling.

**Information**

- Engine will continue to remain idling and engine forced activation mode is maintained even if the gear is shifted to different range.

2. "READY" lamp blinks in the Cluster when the vehicle is in engine forced activation mode. Check that the "READY" lamp is blinking to ensure that engine forced activation mode is entered correctly.

**Information**

- "READY" lamp will continue to blink until engine forced activation mode is cancelled. "READY" lamp will stop blinking when the forced activation mode is cancelled.

3. Engine forced activation mode can be cancelled by pressing the Engine Start/Stop button and switching to IG OFF mode.

## Important Safety Notice

Proper service methods and repair procedures are essential for safe, reliable operation of all motor vehicles as well as personal safety of the operator. The service procedures and descriptions in this shop manual provide general directions for a service and repair.

Procedure, techniques, tools, and parts for service including the skill of the technician vary. It is impossible to provide advice or caution as to each case in this manual.

Accordingly, anyone who intends to use a replacement part, service procedure, or tool, which is not recommended by the vehicle manufacturer, must first assure thoroughly that neither their personal safety nor the safe operation of the vehicle will be first jeopardized by the replacement part, service procedure, or tool they select.

**DANGER**

Reminds you to be especially careful in those areas where carelessness will cause death or serious injury.

**WARNING**

Reminds you to be especially careful in those areas where carelessness may cause death or serious injury.

**CAUTION**

Reminds you to be especially careful in those areas where carelessness may cause personal injury.

***NOTICE***

Gives you information that will prevent you from making errors that could damage the vehicle.

**Information**

Gives you added information that will help you complete a particular procedure.

The following list contains some general WARNINGS that you should follow while working on a vehicle.

- Always wear safety glasses for eye protection.
- Use safety stands whenever a procedure requires you to be under the vehicle.
- Make sure that the ignition switch is always in the OFF position, unless otherwise required by the procedure.
- Set the parking brake when working on the vehicle. If you have an automatic transaxle, set in park unless instructed otherwise for a specific operation.
- Place supporters against the front and rear surfaces of the tires to help prevent the vehicle from moving.
- Operate the engine only in a well-ventilated area to avoid the danger of carbon monoxide poisoning.
- Keep yourself and your clothing away from moving parts when the engine is running, especially the drive belts.
- To prevent serious burns, avoid contact with hot metal parts such as the radiator, exhaust manifold, tail pipe, catalytic converter and muffler.
- Do not smoke while working on a vehicle.
- To avoid injury, always remove rings, watches, loose hanging jewelry, and loose clothing before beginning to work on a vehicle.
- When it is necessary to work under the hood, keep hands and other objects clear of the radiator fan blades! Your vehicle may be equipped with a cooling fan that may turn on, even though the ignition switch is in the OFF position. For this reason care should be taken to ensure that the radiator fan electric motor is completely disconnected when working under the hood and the engine is not running.



## Identification Numbers

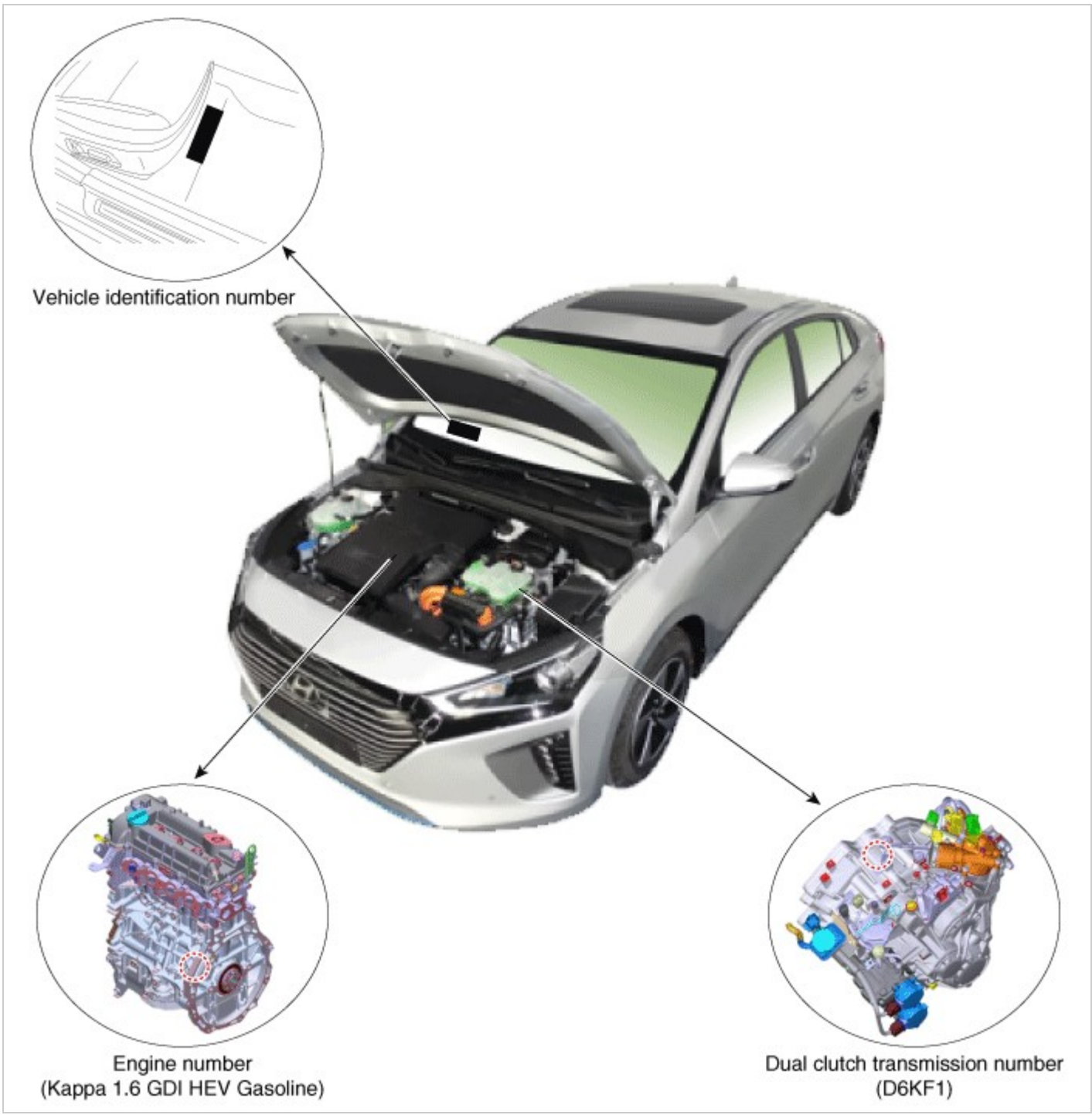


## Identification Number Description

## Vehicle Identification Number

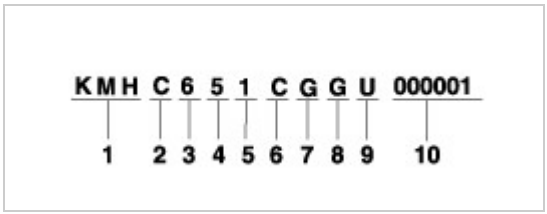


1. World Manufacturer Identifier (WMI)
   - KMH : Passenger vehicle, MPV(Multipurpose Passenger Vehicle)/SUV(Sports Utility Vehicle)/RV(Recreational Vehicle)
   - KMF : Commercial vehicle (Van)
   - KM8 : MPV/SUV/RV (For U.S.A, Canada, Mexico)
   - KMJ : Van
2. Vehicle line
   - C : IONIQ
3. Model & Series
   - 6 : Low grade (L)
   - 7 : Middle-Low grade (GL)
   - 8 : Middle grade (GLS, JLS, TAX)

- 9 : Middle-High grade (HGS)
- 0 : High grade (TOP)

4. Body/Cabin type, Gross Vehicle Weight Rating
   **[KMH]**
   - 1 : Limousine
   - 2 : Sedan - 2 door
   - 3 : Sedan - 3 door
   - 4 : Sedan - 4 door
   - 5 : Sedan - 5 door
   - 6 : Coupe
   - 7 : Convertible
   - 8 : Wagon
   - 9 : Commercial Van
   - 0 : Pick-Up
   - H : Fast back - 5 door

   **[KMF (Commercial vehicle / Van)]**
   Except U.S.A, Canada, Mexico, Gulf Cooperation Council, China
   - X : Standard Cabin / Semi-Bonnet
   - Y : Double Cabin / Bonnet
   - Z : Super Cabin / Box

   For U.S.A, Canada, Mexico, Gulf Cooperation Council, China
   - 3 : Standard Cabin Class-E 4×2 / Semi-Bonnet Class-E 4×2
   - 4 : Standard Cabin Class-E 4×4 / Semi-Bonnet Class-E 4×4
   - 5 : Standard Cabin Class-F 4×2 / Semi-Bonnet Class-F 4×2
   - 6 : Standard Cabin Class-F 4×4 / Semi-Bonnet Class-F 4×4
   - 7 : Double Cabin Class-E 4×2 / Bonnet Class-E 4×2
   - 8 : Double Cabin Class-E 4×4 / Bonnet Class-E 4×4
   - 9 : Double Cabin Class-F 4×2 / Bonnet Class-F 4×2
   - 0 : Double Cabin Class-F 4×4 / Bonnet Class-F 4×4
   - A : Super Cabin Class-E 4×2 / Box Class-E 4×2
   - B : Super Cabin Class-E 4×4 / Box Class-E 4×4
   - C : Super Cabin Class-F 4×2 / Box Class-F 4×2
   - D : Super Cabin Class-F 4×4 / Box Class-F 4×4

   **[KM8]**
   - 1 : Wagon 4×2 Class-A
   - 2 : Wagon 4×2 Class-B
   - 3 : Wagon 4×2 Class-C
   - 4 : Wagon 4×2 Class-D
   - 5 : Wagon 4×2 Class-E
   - 6 : Wagon 4×2 Class-F
   - 7 : Wagon 4×2 Class-G
   - A : Wagon 4×4 Class-A
   - B : Wagon 4×4 Class-B
   - C : Wagon 4×4 Class-C
   - D : Wagon 4×4 Class-D
   - E : Wagon 4×4 Class-E
   - F : Wagon 4×4 Class-F
   - G : Wagon 4×4 Class-G

   **[KMJ]**
   - 1 : Box
   - 2 : Bonnet
   - 3 : Semi-Bonnet

5. Restraint system, Brake system
   **[KMH, KM8]**
   Except U.S.A, Canada, Mexico
   - 0 : Both side - None
   - 1 : Both side - Active belt
   - 2 : Both side - Passive belt

   For U.S.A, Canada, Mexico

| Code | Seat belt | Front air bag | | Knee air bag | | Side air bag | | | Curtain air bag | | |
|---|---|---|---|---|---|---|---|---|---|---|---|
| | | Driver''s | Passenger''s | Driver''s | Passenger''s | 1st row | 2nd row | 3rd row | 1st row | 2nd row | 3rd row |
| A | ○ | ○ | ○ | × | × | ○ | × | × | ○ | ○ | × |
| B | ○ | ○ | ○ | × | × | × | × | × | × | × | × |
| | | | | | | | | | | | |

| | | | | | | | | | | | |
|---|---|---|---|---|---|---|---|---|---|---|---|
| C | ○ | ○ | ○ | × | × | ○ | × | × | ○ | ○ | ○ |
| D | ○ | ○ | ○ | × | × | ○ | ○ | × | ○ | ○ | × |
| E | ○ | ○ | × | × | × | × | × | × | × | × | × |
| F | ○ | ○ | ○ | × | × | ○ | × | × | × | × | × |
| N | ○ | × | × | × | × | × | × | × | × | × | × |
| H | ○ | ○ | ○ | ○ | × | ○ | × | × | ○ | ○ | ○ |

**[KMJ]**
Except U.S.A, Canada, Mexico
- 7 : Hydraulic brake system
- 8 : Pneumatic brake system
- 9 : Mixed brake system

For U.S.A, Canada, Mexico
- X : Hydraulic brake system
- Y : Pneumatic brake system
- Z : Mixed brake system

**[KMF]**
Except U.S.A, Canada, Mexico
- 7 : Hydraulic brake system
- 8 : Pneumatic brake system
- 9 : Mixed brake system

For U.S.A, Canada, Mexico

6. Engine type
   - C : Gasoline engine 1.6 (Kappa 1.6 GDI + HEV)
7. Check digit or Driver's side & Transmission
   Except U.S.A, Canada, Mexico, Gulf Cooperation Council, China, Yemen
   - A : LHD & MT
   - B : LHD & AT
   - C : LHD & MT+Transfer
   - D : LHD & AT+Transfer
   - E : LHD & CVT
   - F : LHD & Reduction Gear
   - G : LHD & DCT
   - H : LHD & DCT+Transfer
   - L : RHD & MT
   - M : RHD & AT
   - N : RHD & MT+Transfer
   - S : RHD & AT+Transfer
   - T : RHD & CVT
   - U : RHD & Reduction Gear
   - V : RHD & DCT
   - W : RHD & DCT+Transfer

   For U.S.A, Canada, Mexico, Gulf Cooperation Council, China, Yemen
   - Check digit : 0 - 9, ×
8. Production year
   - G : 2016, H : 2017, J : 2018, K : 2019...
9. Plant of production
   - A : Asan (Korea)
   - C : Cheonju (Korea)
   - U : Ulsan (Korea)
10. Vehicle production sequence number
    - 000001 - 999999

## Engine Number

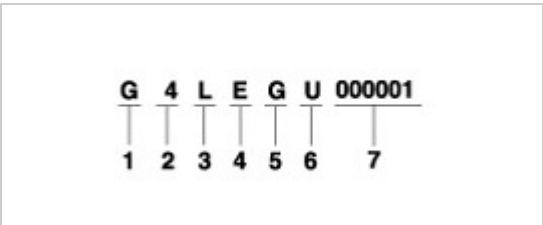


1. Engine fuel

- G : Gasoline

2. Engine range
   - 4 : 4 cycle 4 cylinder
3. Engine development order and capacity
   - L : Kappa engine (Gasoline)
4. Engine Capacity
   - E : 1580cc (HEV)
5. Production year
   - G : 2016, H : 2017, J : 2018, K : 2019...
6. Plant of production
   - A : Asan (Korea)
   - B : Beijing (China)
   - H : Hwasung (Korea)
   - K : Montgomery (U.S.A)
   - M : Chennai (India)
   - P : Poseung (Korea)
   - S : Sohari (Korea)
   - T : Izmit (Turkey)
   - U : Ulsan (Korea)
   - W : Shandong (China)
   - Z : Zilina (Slovakia)
   - 1 : Yancheng (China)
7. Engine production sequence number
   - 000001 - 999999

## Dual Clutch Transmission Number (D6KF1)

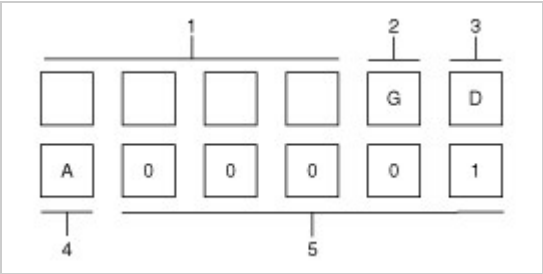


1. Model
   – D80k : D6KF1
2. Production year
   - G : 2016, H : 2017, J : 2018, K : 2019...
3. Plant of production-
   D : Hyundai Dymos
4. Month of production
   - 1 - 9 : 1 - 9 month
   - A - C : 10 - 12 month
5. Transmission production sequence number
   - 00001 - 99999

## Paint Code

| Code | Color |
|---|---|
| NKA | Phantom Black |
| N4B | Marina Blue |
| T8S | Platinum Silver |
| WAW | Pola White |
| YT3 | Iron Gray |
| RY9 | Phoenix Orange |
| TS7 | Aurora Silver |
| RN8 | Choccy Brown |
| YU9 | Mist Meadow |

## Warning and Caution Labels

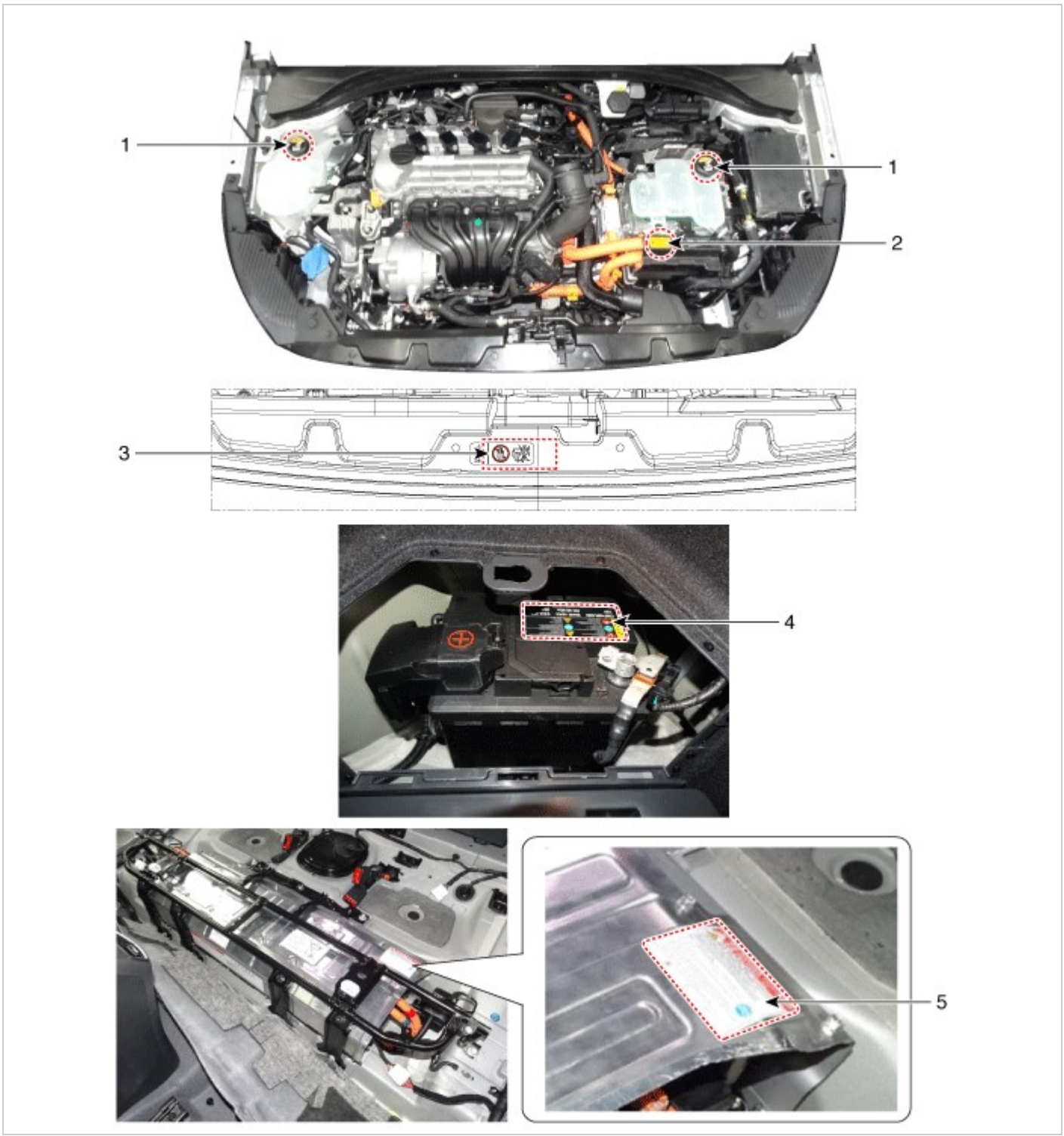


1. Coolant caution
2. High voltage caution
3. Fan caution
4. Auxiliary 12V battery caution
5. High voltage battery caution

## Auxiliary 12V battery Caution Label Description

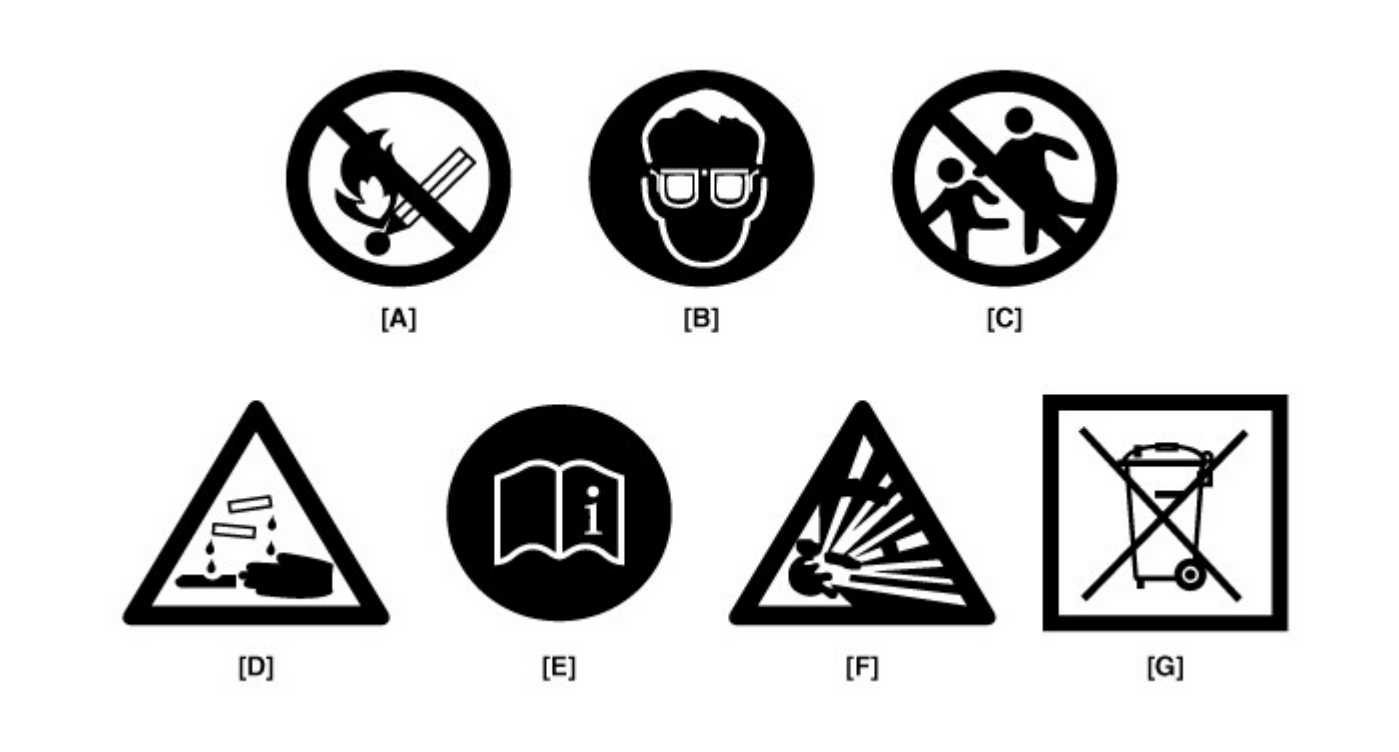


## Warning / Caution Label (Cont"d)

A.
Keep lighted cigarettes and all other flames or sparks away from the battery.

B.
Wear eye protection when charging or working near a battery. Always provide ventilation when working in an enclosed space.

- When lifting a plastic-cased battery, excessive pressure on acid to leak resulting in personal injury. Lift with a battery carrier or with your hands on opposite corners.
- Never attempt to change the battery when the battery cables are connected.
- The electrical ignition system works with high voltage.
  Never touch these components with the engine running or the ignition switched on.

C.
Keep batteries out of the reach of children because batteries contain highly corrosive SULFURIC ACID. Do not allow battery acid to contact your skin, eyes, clothing or paint finish.

D.
If any electrolyte gets into your eyes, flush your eyes with clean water for at least 15 minutes and get immediate medical attention. If possible, continue to apply water with a sponge or cloth until medical attention is received.
If electrolyte gets on your skin, throughly wash the contacted area. If you feel a pain or a burning sensation, get medical attention immediately.

E.
Always read the following instructions carefully when handing a battery.

F.
Hydrogen, which is a highly combustible gas, is always presents in battery cells and may explode if ignited.

G.
An improperly disposed battery can be harmful to the environment and human health.
Always confirm local regulations for battery disposal.

## Handling and Storage the Battery

| | |
|---|---|
| Battery Itself | • Batteries should be stored in cool, dry (27°C/80°F) places and out of direct sunlight.<br>• MF batteries are tightly sealed to prevent acid leakage.<br>However, tilting the battery to an angle of 45 degrees can cause acid to leak through the vents on the sides.<br>Therefore, batteries should always be stored in their upright positions..<br>Prevent placing any aqueous or solid (i.e. conductors) bodies on top of the battery.<br>• |

| | |
|---|---|
| | It is extremely dangerous to use tools, such as hammers, on the battery terminals when connecting cables to the mounted battery. |
| Battery on Vehicle | • When storing the vehicle for long periods of time, make sure to remove the memory fuse at junction box to prevent natural discharging.<br>If the memory fuse was removed, run the engine for battery charging within 3 months from the start of vehicle storing. |

**NOTICE**

- After reconnecting or recharging a discharged battery, the ESP OFF indicator may illuminate.
- In this case, turn the handle half way to the left and right whilst the ignition switch is in the ON position.
- Then, restart the engine after the ignition is OFF.
- The ESP OFF indicator may turn OFF.
- If the ESP OFF indicator does not turn OFF, have the system checked refering to DTC.



## Lift and Support Points

1. Place the lift blocks under the support points as shown in the illustration.
2. Raise the hoist a few inches (centimeters) and rock the vehicle to be sure it is firmly supported.
3. Raise the hoist to full height to inspect the lift points for secure support.

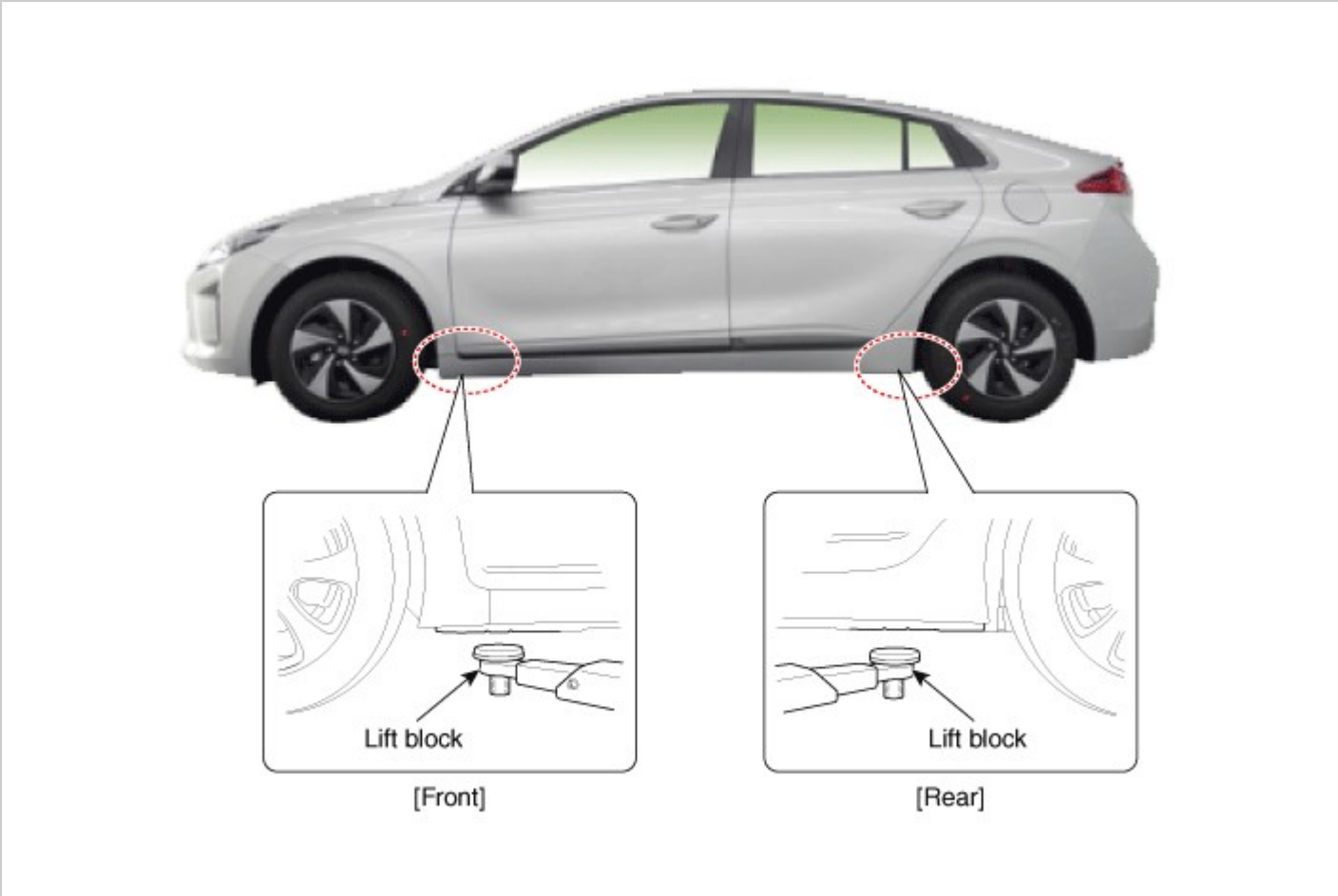




## Towing

If the vehicle needs to be towed, call a professional towing service. Never tow vehicle with just a rope or chain. It is very dangerous.

**Emergency Towing**

There are three popular methods of towing a vehicle :

– The operator loads the vehicle on the back of truck. This is best way of transporting the vehicle.

– The tow truck uses two pivoting arms that go under the tires of the driving axle and lift them off the ground. The other two wheels remain on the ground.

– The tow truck uses metal cables with hooks on the ends. These hooks go around parts of the frame or suspension, and the cables lift that end of the vehicle off the ground. The vehicle"s suspension and body can be seriously damaged if this method of towing is attempted.

If the vehicle cannot be transported by flat-bed, should be towed with the wheels of the drivig axle off the ground and do the following :

Manual Transaxle

- Release the parking brake.
- Shift the Transaxle to neutral

Automatic Transaxle

- Release the parking brake.
- Start the engine.
- Shift to [D] position, then [N] position.
- Turn off the engine.

**⚠ CAUTION**

- The vehicle equipped with full-time 4WD should be only transported on a flat-bed.
- Improper towing preparation will damage the transaxle. follow the above procedure exactly. If you cannot shift the transaxle or start the engine(automatic transaxle), your vehicle must be transported on a flatbed.
- It is the best to tow vehicle no farther than 30km (19miles), and keep the speed below 50km/h (30mph).
- Trying to lift or tow your vehicle by the bumpers will cause serious damage. The bumpers are not designed to support the vehicle"s weight.

### [Front]

### [Rear]

## Towing when the ECS is malfunction

If the ECS malfunction indicator illuminates when there is no air in the suspension, the vehicle height will be very lower, so do not drive to protect the vehicle from the projections on the surface of the ground. The vehicle should be only transported on a flat-bed.
Take your vehicle to an autorized HYUNDAI dealer by towing the vehicle and have the system checked.

**⚠ CAUTION**

- When you load the vehicle onto the tow truck, the loading angle should be smaller than 6°.
- If disabled vehicle is unable to be moved, do not forcibly continue the towing.



## Tightening Torque Table of Standard Parts

| Bolt (Nominal diameter) | Nut (Nominal diameter) |
|---|---|
| | |

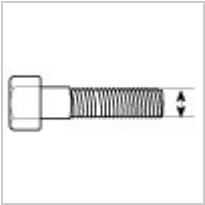

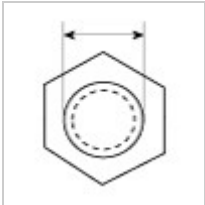

| Bolt/ Nut Thin screw | | Torque Nm (kg.m, lb-ft) | | |
|---|---|---|---|---|
| | Pitch [mm (in.) ] | 4T | 8T | 10T |
| Nominal diameter. (mm) | 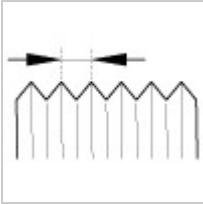 | 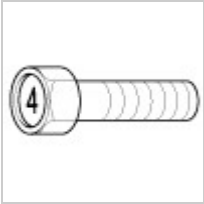 | 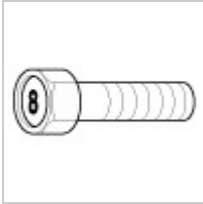 | 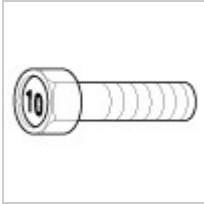 |
| M5 | 0.8 (0.031) | 2.0 - 3.0 (0.2 - 0.3, 1.4 - 2.2) | 4.9 - 6.9 (0.5 - 0.7, 3.6 - 5.1) | 7.8 - 10.8 (0.8 - 1.1, 5.8 - 8.0) |
| M6 | 1 (0.039) | 2.9 - 4.9 (0.3 - 0.5, 2.2 - 3.6) | 8.8 - 12.7 (0.9 - 1.3, 6.5 - 9.4) | 13.7 - 18.6 (1.4 - 1.9, 10.1 - 13.7) |
| M8 | 1.25 (0.049) | 8.8 - 11.8 (0.9 - 1.2, 6.5 - 8.7) | 22.6 - 30.4 (2.3 - 3.1, 16.6 - 22.4) | 33.3 - 44.1 (3.4 - 4.5, 24.6 - 32.5) |
| M10 | 1.5 (0.059) | 16.7 - 22.6 (1.7 - 2.3, 12.3 - 16.6) | 45.1 - 60.8 (4.6 - 6.2, 33.3 - 44.8) | 65.7 - 88.3 (6.7 - 9.0, 48.5 - 65.1) |
| M12 | 1.75 (0.068) | 29.4 - 39.2 (3.0 - 4.0, 21.7 - 28.9) | 78.5 - 105.9 (8.0 - 10.8, 57.9 - 78.1) | 114.7 - 154.9 (11.7 - 15.8, 84.6 - 114.3) |
| M14 | 2 (0.078) | 47.1 - 63.7 (4.8 - 6.5, 34.7 - 47.0) | 125.5 - 169.7 (12.8 - 17.3, 92.6 - 125.1) | 183.4 - 249.1 (18.7 - 25.4, 135.3 - 183.7) |
| M16 | 2 (0.078) | 73.5 - 100.0 (7.5 - 10.2, 54.2 - 73.8) | 197.1 - 266.7 (20.1 - 27.2, 145.4 - 196.7) | 288.3 - 390.3 (29.4 - 39.8, 212.7 - 287.9) |
| M20 | 2.5 (0.098) | 144.2 - 195.2 (14.7 - 19.9, 106.3 - 143.9) | 396.2 - 535.4 (40.4 - 54.6, 292.2 - 394.9) | 565.8 - 764.9 (57.7 - 78.0, 417.3 - 564.2) |
| M24 | 3 (0.118) | 249.1 - 337.3 (25.4 - 34.4, 183.7 - 248.8) | 687.4 - 929.7 (70.1 - 94.8, 507.0 - 685.7) | 975.8 - 1320.0 (99.5 - 134.6, 719.7 - 973.6) |
| M30 | 3.5 (0.137) | 499.2 - 674.7 (50.9 - 68.8, 368.2 - 497.6) | 1372.9 - 1858.4 (140.0 - 189.5, 1012.6 - 1370.7) | 1956.4 - 2647.8 (199.5 - 270.0, 1443.0 - 1952.9) |

| Bolt/ Nut Thin screw | | Torque Nm (kg.m, lb-ft) | | |
|---|---|---|---|---|
| | Pitch [mm (in.) ] | 4T | 8T | 10T |
| Nominal diameter. (mm) | 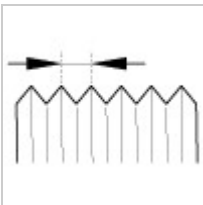 | 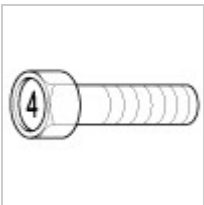 | 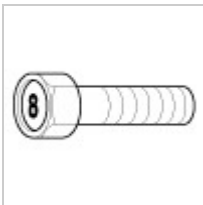 | 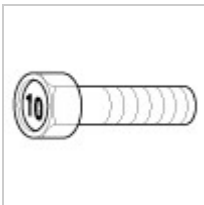 |
| M5 | 0.5 (0.019) | 2.0 - 3.0 (0.2 - 0.3, 1.4 - 2.2) | 5.9 - 8.8 (0.6 - 0.9, 4.3 - 6.5) | 8.8 - 12.7 (0.9 - 1.3, 6.5 - 9.4) |
| M6 | 0.75 (0.029) | 3.9 - 4.9 (0.4 - 0.5, 2.9 - 3.6) | 9.8 - 13.7 (1.0 - 1.4, 7.2 - 10.1) | 14.7 - 20.6 (1.5 - 2.1, 10.8 - 15.2) |
| M8 | 1 (0.039) | 8.8 - 11.8 (0.9 - 1.2, 6.5 - 8.7) | 24.5 - 32.4 (2.5 - 3.3, 18.1 - 23.9) | 35.3 - 48.1 (3.6 - 4.9, 26.0 - 35.4) |
| M10 | 1.25 (0.049) | 17.7 - 23.5 (1.8 - 2.4, 13.0 - 17.4) | 47.1 - 63.7 (4.8 - 6.5, 34.7 - 47.0) | 69.6 - 94.1 (7.1 - 9.6, 51.4 - 69.4) |
| M12 | 1.25 (0.049) | 32.4 - 44.1 (3.3 - 4.5, 23.9 - 32.5) | 86.3 - 117.7 (8.8 - 12.0, 63.7 - 86.8) | 127.5 - 172.6 (13.0 - 17.6, 94.0 - 127.3) |
| M14 | 1.5 (0.059) | 51.0 - 69.6 (5.2 - 7.1, 37.6 - 51.4) | 136.3 - 185.3 (13.9 - 18.9, 100.5 - 136.7) | 201.0 - 271.6 (20.5 - 27.7, 148.3 - 200.4) |
| M16 | 1.5 (0.059) | 79.4 - 107.9 (8.1 - 11.0, 58.6 - 79.6) | 211.8 - 286.4 (21.6 - 29.2, 156.2 - 211.2) | 311.8 - 421.7 (31.8 - 43.0, 230.0 - 311.0) |
| M20 | 1.5 (0.059) | 163.8 - 221.6 (16.7 - 22.6, 120.8 - 163.5) | 448.2 - 607.0 (45.7 - 61.9, 330.5 - 447.7) | 639.4 - 864.9 (65.2 - 88.2, 471.6 - 638.0) |
| M24 | 2 (0.078) | 276.5 - 373.6 (28.2 - 38.1, 204.0 - 275.6) | 759.0 - 1026.8 (77.4 - 104.7, 559.8 - 757.3) | 1080.7 - 1462.2 (110.2 - 149.1, 797.1 - 1078.4) |
| M30 | 2 (0.078) | 562.9 - 762.0 (57.4 - 77.7, 415.2 - 562.0) | 1553.4 - 2102.5 (158.4 - 214.4, 1145.7 - 1550.8) | 2210.4 - 2991.0 (225.4 - 305.0, 1630.3 - 2206.1) |

| Flange Bolt (Nominal diameter) | Flange Nut (Nominal diameter) |
|---|---|
| 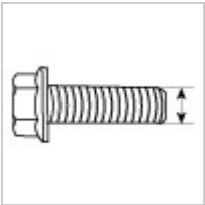 | 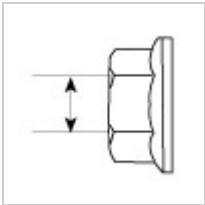 |

| Flange Bolt/ Nut Normal screw | | Torque Nm (kg.m, lb-ft) | | |
|---|---|---|---|---|
| Nominal diameter. (mm) | Pitch [mm (in.) ] | 4T | 8T | 10T |
| | 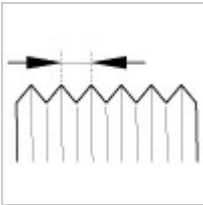 | | 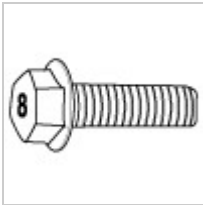 | 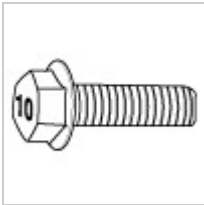 |
| M5 | 0.8 (0.031) | 2.0 - 2.9 (0.2 - 0.3, 1.4 - 2.2) | 5.9 - 7.8 (0.6 - 0.8, 4.3 - 5.8) | 8.8 - 11.8 (0.9 - 1.2, 6.5 - 8.7) |
| M6 | 1 (0.039) | 3.9 - 4.9 (0.4 - 0.5, 2.9 - 3.6) | 9.8 - 13.7 (1.0 - 1.4, 7.2 - 10.1) | 14.7 - 19.6 (1.5 - 2.0, 10.8 - 14.5) |
| M8 | 1.25 (0.049) | 8.8 - 11.8 (0.9 - 1.2, 6.5 - 8.7) | 24.5 - 32.4 (2.5 - 3.3, 18.1 - 23.9) | 35.3 - 48.1 (3.6 - 4.9, 26.0 - 35.4) |
| M10 | 1.5 (0.059) | 17.7 - 24.5 (1.8 - 2.5, 13.0 - 18.1) | 48.1 - 65.7 (4.9 - 6.7, 35.4 - 48.5) | 70.6 - 96.1 (7.2 - 9.8, 52.1 - 70.9) |
| M12 | 1.75 (0.068) | 31.4 - 43.1 (3.2 - 4.4, 23.1 - 31.8) | 84.3 - 113.8 (8.6 - 11.6, 62.2 - 83.9) | 123.6 - 167.7 (12.6 - 17.1, 91.1 - 123.7) |
| M14 | 2 (0.078) | 51.0 - 68.6 (5.2 - 7.0, 37.6 - 50.6) | 135.3 - 182.4 (13.8 - 18.6, 99.8 - 134.5) | 198.1 - 268.7 (20.2 - 27.4, 146.1 - 198.2) |
| M16 | 2 (0.078) | 79.4 - 107.9 (8.1 - 11.0, 58.6 - 79.6) | 212.8 - 288.3 (21.7 - 29.4, 157.0 - 212.7) | 311.8 - 421.7 (31.8 - 43.0, 230.0 - 311.0) |

| Flange Bolt/ Nut Thin screw | | Torque Nm (kg.m, lb-ft) | | |
|---|---|---|---|---|
| Nominal diameter. (mm) | Pitch [mm (in.) ] | 4T | 8T | 10T |
| | 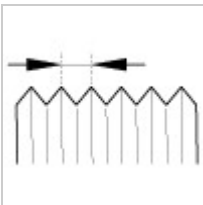 | 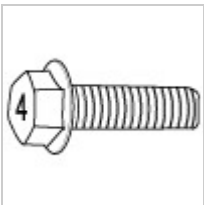 | 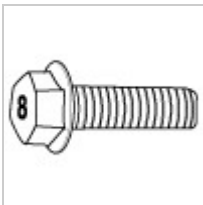 | 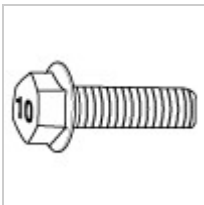 |
| M5 | 0.5 (0.019) | 2.9 - 2.9 (0.3 - 0.3, 2.2 - 2.2) | 6.9 - 8.8 (0.7 - 0.9, 5.1 - 6.5) | 9.8 - 13.7 (1.0 - 1.4, 7.2 - 10.1) |
| M6 | 0.75 (0.029) | 3.9 - 5.9 (0.4 - 0.6, 2.9 - 4.3) | 10.8 - 14.7 (1.1 - 1.5, 8.0 - 10.8) | 16.7 - 21.6 (1.7 - 2.2, 12.3 - 15.9) |
| M8 | 1 (0.039) | 9.8 - 12.7 (1.0 - 1.3, 7.2 - 9.4) | 26.5 - 35.3 (2.7 - 3.6, 19.5 - 26.0) | 38.2 - 52.0 (3.9 - 5.3, 28.2 - 38.3) |
| M10 | 1.25 (0.049) | 19.6 - 25.5 (2.0 - 2.6, 14.5 - 18.8) | 51.0 - 68.6 (5.2 - 7.0, 37.6 - 50.6) | 75.5 - 102.0 (7.7 - 10.4, 55.7 - 75.2) |
| M12 | 1.25 (0.049) | 35.3 - 48.1 (3.6 - 4.9, 26.0 - 35.4) | 94.1 - 126.5 (9.6 - 12.9, 69.4 - 93.3) | 138.3 - 186.3 (14.1 - 19.0, 102.0 - 137.4) |
| M14 | 1.5 (0.059) | 55.9 - 75.5 (5.7 - 7.7, 41.2 - 55.7) | 148.1 - 200.1 (15.1 - 20.4, 109.2 - 147.6) | 216.7 - 293.2 (22.1 - 29.9, 159.8 - 216.3) |
| M16 | 1.5 (0.059) | 86.3 - 116.7 (8.8 - 11.9, 63.7 - 86.1) | 229.5 - 309.9 (23.4 - 31.6, 169.3 - 228.6) | 336.4 - 455.0 (34.3 - 46.4, 248.1 - 335.6) |

**NOTICE**

1) The torques shown in the table are standard values under the following conditions.
- Nuts and bolts are made of galvanized steel bar.
- Galvanized plain steel washers are inserted.
- All nuts, bolts and plain washers are dry.

2) The torques shown in the table are not applicable.
- When spring washers, toothed washers and the like are inserted.
- If plastic parts are fastened.

- If self-tapping screws or self-locking nuts are used.
- If threads and surfaces are coated with oil.

General Information

## Basic Service Symbols

There are five primary symbols used to complement illustrations. These symbols indicate the part to apply such materials during service.

| Symbol | Meaning |
|---|---|
| | Do not reuse the part. Replace a new one. |
| | Apply engine oil or transmission oil to the part. |
| | Apply automatic transmission fluid (ATF) to the part. |
| 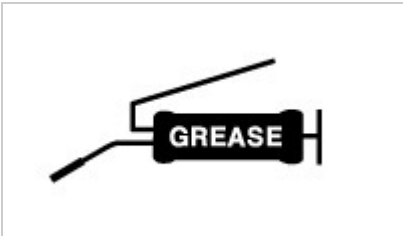  | Apply grease to the part. |
| | Apply sealant to the part. |

General Information

## General Service Information

**Protection of the Vehicle**

Always be sure to cover fenders, seats, and floor areas before starting work.

**CAUTION**

- The support rod must be inserted into the hole near the edge of the hood whenever you inspect the engine compartment to prevent the hood from falling and causing possible injury.
- Make sure that the support rod has been released prior to closing the hood. Always check to be sure the hood is firmly latched before driving the vehicle.

## Preparation of Tools and Mesuring Equipment

Be sure that all necessary tools and measuring equipment are available starting work.

## Special Tools

Use special tools when they are required.

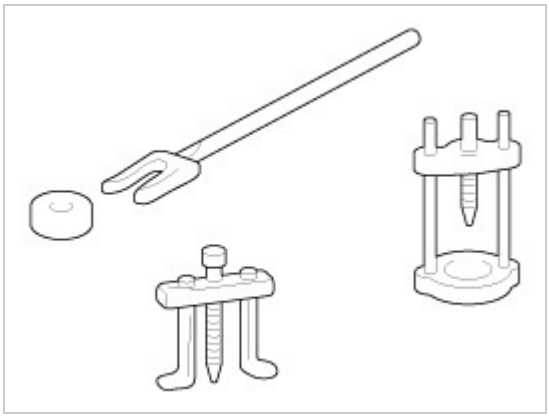

## Removal of Parts

First find the cause of the problem and then determine whether removal or disassembly before starting the job.

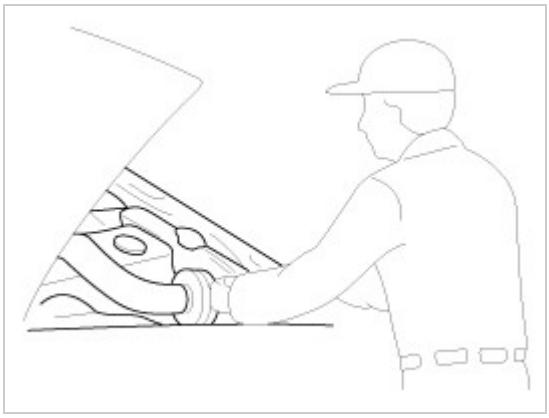

## Disassembly

If the disassembly procedure is complex, requiring many parts to be disassembled, all parts should be disassembled in a way that will not affect their performance or external appearance.

1) **Inspection of parts**
   Each part, when removed, should be carefully on suspected for malfunction, deformation, damage, and other problems.

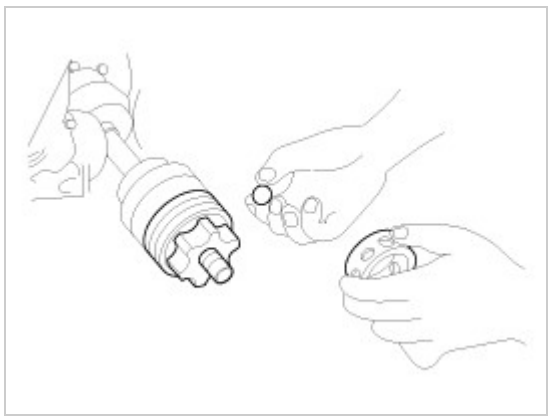

2) **Arrangement of parts**
   All disassembled parts should be carefully arranged for effective reassembly.
   Be sure to separate and correctly identify the parts to be replaced from those that will be used again.

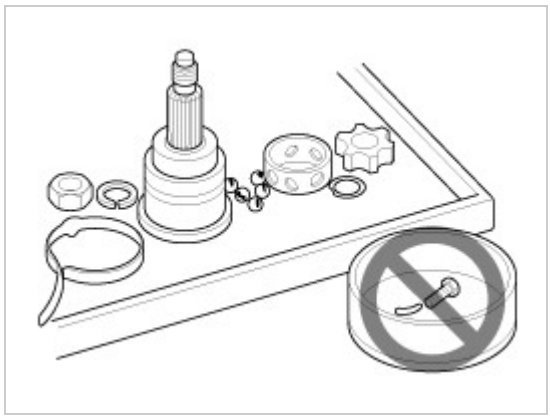

3) **Cleaning parts for reuse**

All parts to be used again should be carefully and thoroughly cleaned by an appropriate method.

## Parts

When replacing parts, use HYUNDAI genuine parts.

## Replacement

Standard values, such as torques and certain adjustments, must be strictly observed in the reassembly of all parts.
If removed, the following parts should always be replaced with new ones.

1) Oil seals
2) Gaskets
3) O-rings
4) Lock washers
5) Cotter pins (split pins)
6) Plastic nuts

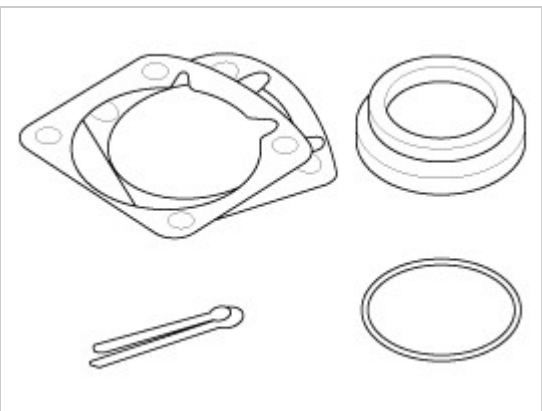

Depending on their location.

7) Sealant should be applied to gaskets.
8) Oil should be applied to the moving components of parts.
9) Specified oil or grease should be applied to the prescribed locations (oil seals, etc) before assembly.

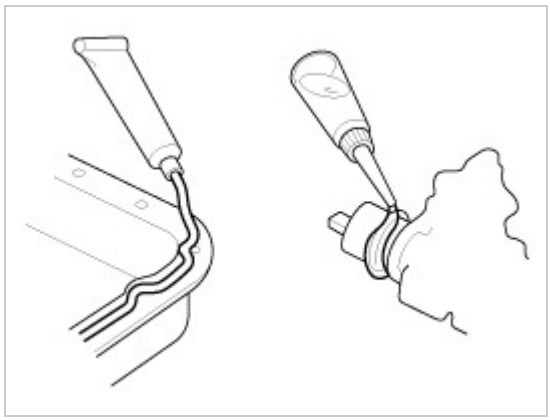

## Adjustment

Use gauges and testers to adjust correctly the parts to standard values correctly.

## Electrical System

1. Be sure to disconnect the battery cable from the negative (-) terminal of the battery.
2. Never pull on the wires when disconnecting connectors.
3. Locking connectors will click when the connector is secure.
4. Handle sensors and relays carefully. Be careful not to drop them against other parts.

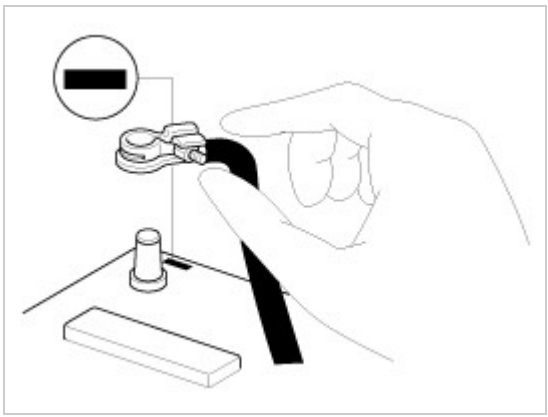

## Rubber Parts and Tubes

Always prevent gasoline from touching rubber parts or tubing.

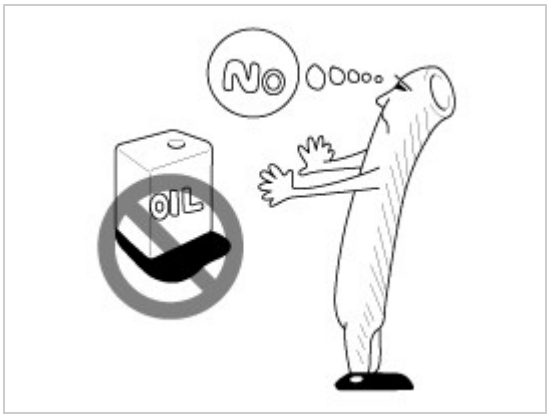


## Measuring Body Dimensiongs

1. Basically, all measurements in this manual are taken with a tracking gauge.
2. When a measuring tape is used, check to be sure there is no elongation, twisting or bending.
3. For measuring dimensions, both projected dimensions and actual - measurement dimensions are used in this manual.

## Dimensions Projected

1. These are the dimensions measured when the measurement points are projected from the vehicle"s surface, and are the reference dimensions used for used for body alterations.
2. If the length of the tracking gauge probes is adjustable, measure it by lengthening one of two probes as long as the different value in height of the two surface.

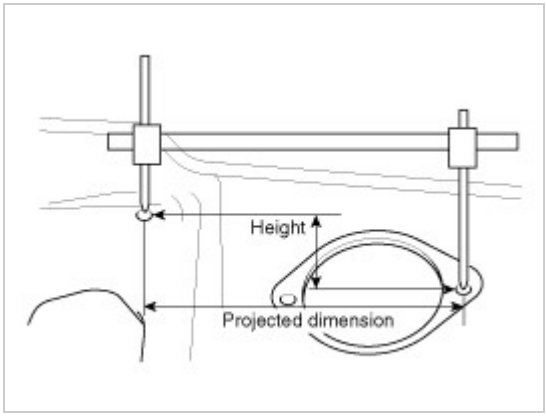


## Measuring Actual Dimensions

1. These dimensions indicate the actual linear distance between measurement points, and are used as the reference dimensions when a tracking gauge is used for measurement.
2. First adjust both probes to the same length (A=A") before measurement.

**NOTICE**

- Check the probes and gauge itself to make sure there is no free play.

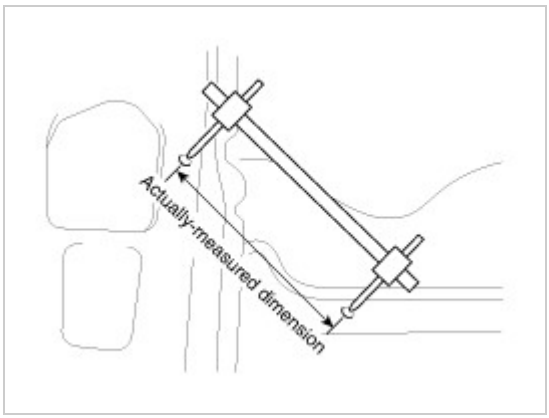


## Measurement Point

Measurements should be taken at the center of the hole.

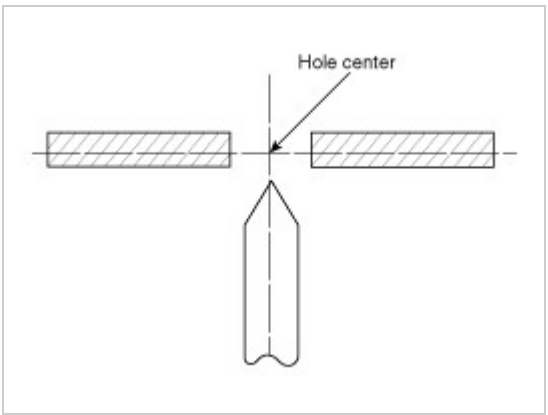


## Checking Cables and Wires

1. Check the terminal for tightness.
2. Check terminals and wires for corrosion from battery electrolyte, etc.
3. Check terminals and wires for open circuits.
4. Check wire insulation and coating for damage, cracks and degrading.
5. Check the conductive parts of terminals for contact with other metallic parts (vehicle body and other parts).
6. Check grounded parts to verify that there is complete continuity between their attaching bolt(s) and the vehicle"s body.
7. Check for incorrect wiring.
8. Check that the wiring is so clamped to the prevent contact with sharp corners of the vehicle body, etc. or hot parts (exhaust manifold, etc.)
9. Check that the wiring is clamped firmly to provide enough clearance from the fan pulley, fan belt and other rotating or moving parts.

10. Check that the wiring has a little space so that it can vibrate between fixed and moving parts such as the vehicle body and the engine.

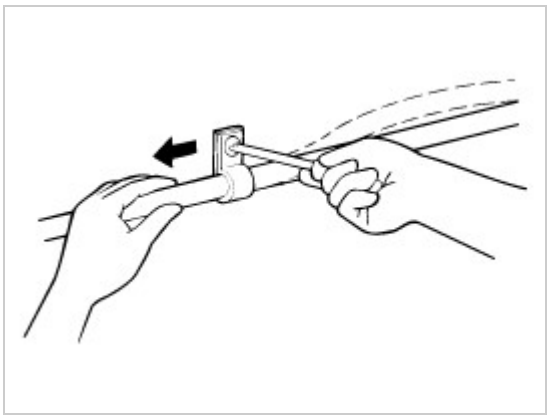

## Check Fuses

A blade type fuse test taps provided to allow checking the fuse itself without removing if from the fuse box. The fuse is good if the test lamp lights up when one lead is connected to the test taps (one at a time) and the other lead is grounded. (Turn the ignition switch so that the fuse circuit becomes operative)

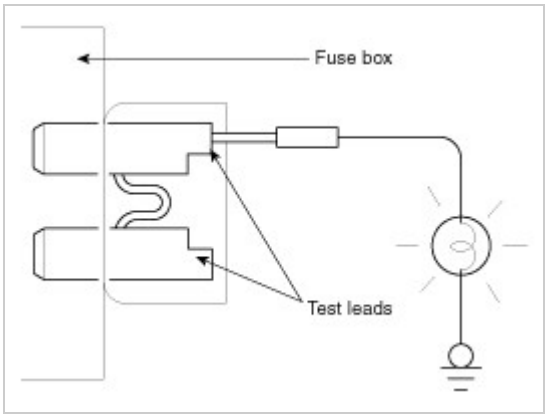


## Serivicing the Electrical System

1. Prior to servicing the electrical system, be sure to turn off the ignition switch and disconnect the battery ground cable.

**NOTICE**

- In the course of MFI or ELC system diagnosis, when the battery cable is removed, any diagnostic trouble code retained by the computer will be cleared. There fore, if necessary, record the diagnostic data before removing the battery cable.

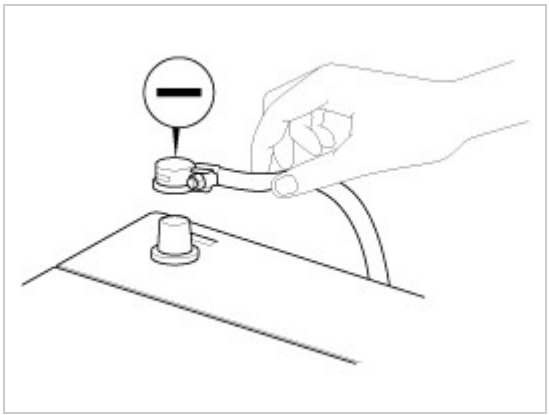

2. Attach the wiring harnesses with clamps so that there is no slack. However, for any harness which passes the engine or other vibrating parts of the vehicle, allow some slack within a range that does not allow the engine vibrations to cause the harness to come into contact with any of the surrounding parts and then secure the harness by using a clamp.

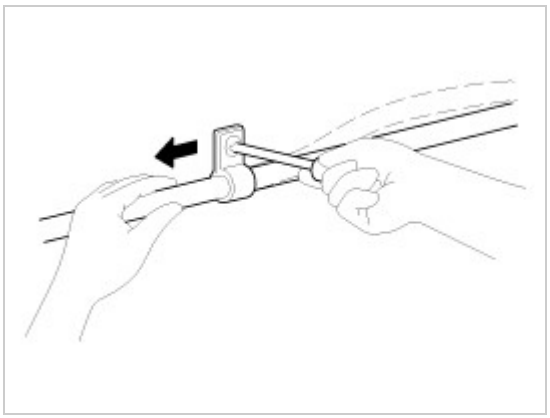

3. If any section of a wiring harness interferes with the edge of a parts, or a corner, wrap the section of the harness with tape or something similar in order to protect if from damage.

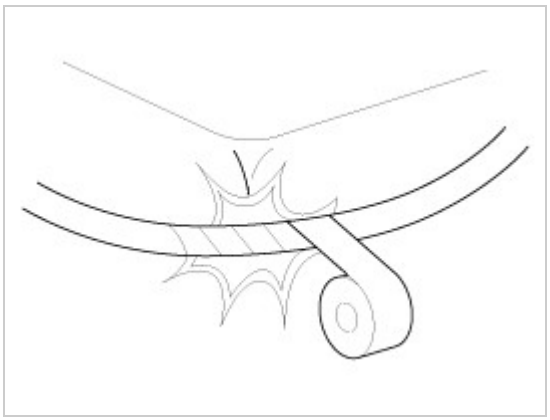

4. When installing any parts, be careful not to pinch or damage any of the wiring harness.

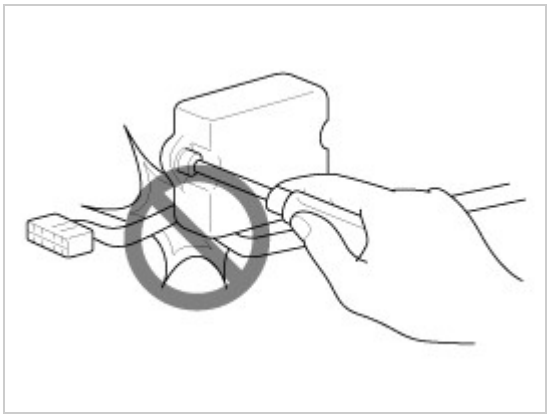

5. Never throw relays, sensors or electrical parts, or expose them to strong shock.

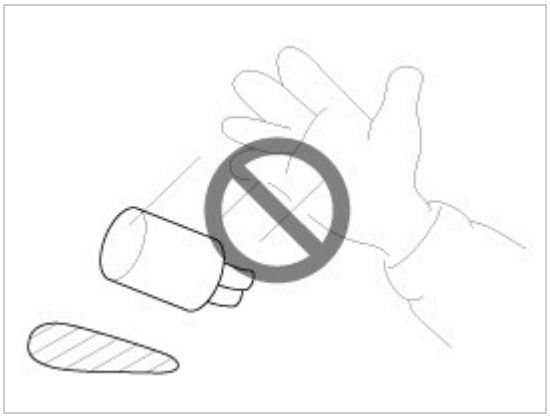

6. The electronic parts used in the computer, relays, etc. are readily damaged by heat. If there is a need for service operations that may cause the temperature to exceed 80°C (176°F), remove the electronic parts before hand.

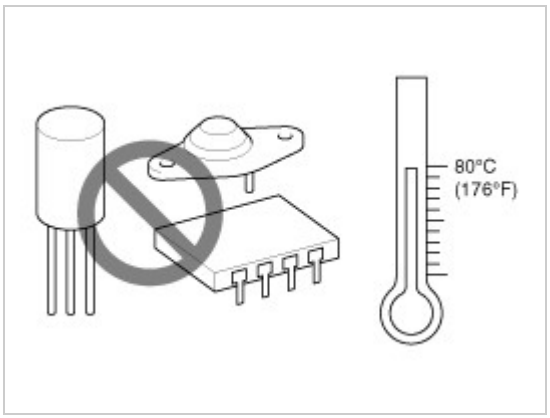


7. Loose connectors cause problems. Make sure that the connectors are always securely fastened.

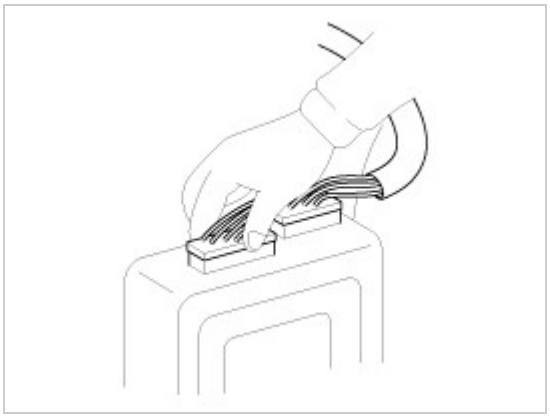

8. When disconnecting a connector, be sure to grip only the connector, not the wires.

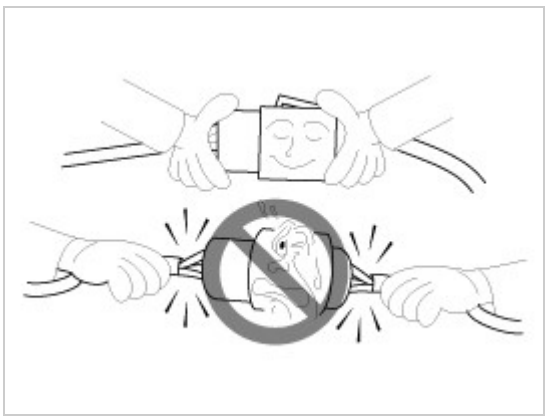

9. Disconnect connector which have catches by pressing in the direction of the arrows shown the illustration.

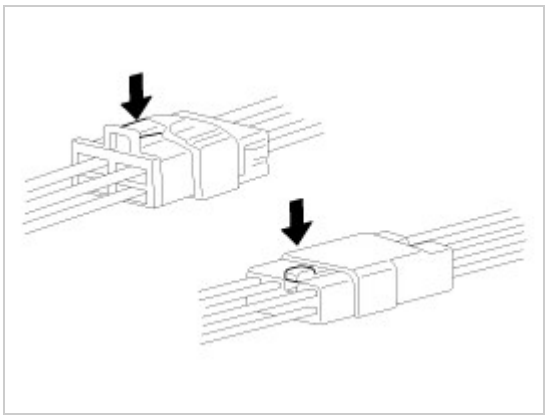

10. Connect connectors which have catches by inserting the connectors until they make a clicking sound.

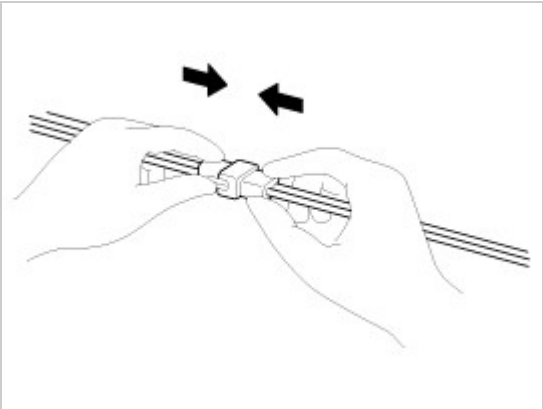

11. When using a circuit tester to check continuity or voltage on connector terminals, insert the test probe into the harness side. If the connector is a sealed connector, insert the test probe through the hole in the rubber cap until contacts the terminal, being careful not to damage the insulation of the wires.

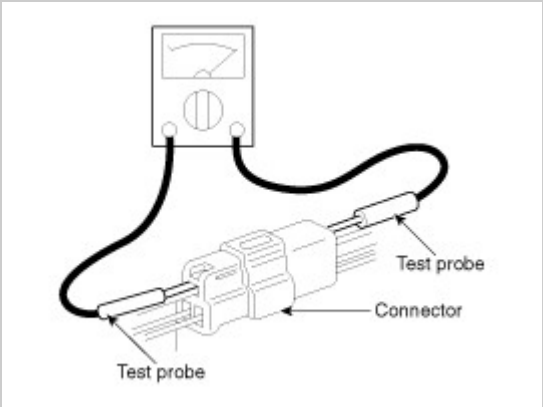


12. To avoid overloading the wiring, take the electrical current load of the optional equipment into consideration, and determine the appropriate wire size.

| Noeminal size | SAE gauge No | Permissible current | |
|---|---|---|---|
| | | In engine compartment | Other areas |
| 0.3mm² | AWG 22 | - | 5A |
| 0.5mm² | AWG 20 | 7A | 13A |
| 0.85mm² | AWG 18 | 9A | 17A |
| 1.25mm² | AWG 16 | 12A | 22A |
| 2.0mm² | AWG 14 | 16A | 30A |
| 3.0mm² | AWG 12 | 21A | 40A |
| 5.0mm² | AWG 10 | 31A | 54A |

## Precautions For Catalytic Converter

**⚠ CAUTION**

- If a large amount of unburned gasoline flows into the converter, it may overheat and create a fire hazard. To prevent this observe the following precations and explain them to your customer.

1. Use only unleaded gasoline.
2. Do not run the engine while the car is at rest for a long time. Avoid running the engine at fast idle for more than 10 minutes and idle speed for more than 20 minutes.
3. Do not measure engine compression for an extended time. Engine compression tests must be made as rapidly as possible. Remove the fuel pump relay before performing a compression test.
4. Do not dispose of used catalytic converter together with parts contaminated with gasoline or oil.