Safety Precaution

Precautions to take before servicing high voltage system

DANGER

- Since hybrid vehicles contain a high voltage battery, if the high voltage system or vehicles are handled incorrectly, this might lead to a serious accidents like electric shock and electric leakage.

WARNING

- Be sure to shut off the high voltage by removing the safety plug before performing inspection or repairing the high voltage system.
  (Refer to "High Voltage Shut-off Procedures")
- The responsible worker keeps the removed safety plug to prevent the plug from being connected by mistake.
- Do not keep any metal objects (watch, ring etc.) while working on the high voltage system, which it can cause serious accidents like electric shock.
- Before beginning work on the high voltage system, the worker should wear personal protective equipment to prevent safety accidents.
  (Refer to "Personal Protective Equipment")
- Never allow workers who are not wear personal protective equipment to touch the high voltage system. High voltage components should be covered with an insulation sheet to prevent safety accidents.
- Use insulation tools when working on the high voltage system.
- Put the removed high voltage components on the insulation mat.

Information

- All the high voltage wiring and connectors are orange.
- A caution label for high voltage is attached to the high voltage components.
- High voltage components :
  High Voltage Battery Pack Assembly, Power Relay Assembly (PRA), BMS ECU, Hybrid Power Control Unit (HPCU), Hybrid Drive Motor, HSG, Electric A/C Compressor, Low DC/DC Converter (LDC), Power Cable, Electric Compressor etc.

CAUTION

- Inform of danger of high voltage by putting the "high voltage caution" on the vehicle as image below.

SAMPLE

DANGER

High Voltage : Do not touch during operation.

Person in charge : _____

Copy this page and put it after folding on the roof of the vehicle in service.

DANGER

High Voltage : Do not touch during operation.

Person in charge : _____

Personal Protective Equipment

Name	Illustration	Description
Insulation glove		Used when inspecting or working on the high voltage components [Insulation performance : 1000V / 300A or above]
Insulation shoes		Used when inspecting or working on the high voltage components

Insulation clothes		Used in the case below • During Removal & installation or inspection of the high voltage battery terminals or wiring, which spark might happen. • During working on the high voltage battery pack assembly.
Insulation helmet	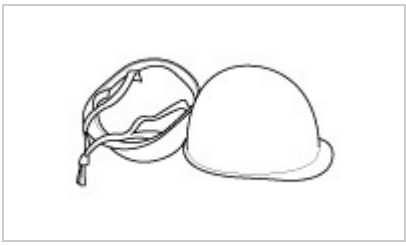	
Safety glasses		
Face shield		
Insulation mat	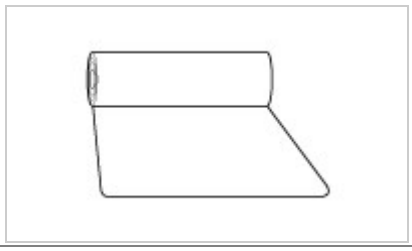	Putting the removed high voltage components on the insulation mat to prevent safety accidents.
Insulation sheet	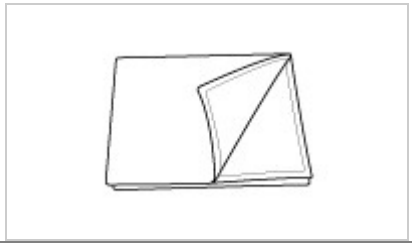	Covering the high voltage components with insulation sheet to prevent people who don’t wear the personal protective equipment from safety accidents.

Precautions to take when handling power cable

- Immediately insulate the high voltage terminal after reconnecting the terminal (use insulation tape).
- Tighten the high voltage terminal screw to spec torque.
- Be careful that (+) and (-) terminals do not come in contact when connecting or disconnecting power cable and busbar.

Precautions to take when handling high voltage battery

- When transporting high voltage battery, be sure to keep it flat and leveled. Failure to do so may decrease the battery performance and/or its life-span.
- High voltage battery"s performance may decrease if it is exposed to high temperature for a lengthy period. As a result, heat-treatment after painting must not exceed 70°C/ 30 minutes, or 80°C/ 20 minutes.

Precautions in case of fire on high voltage battery system

- If the fire occurs indoor, ventilate the area to let out hydrogen gas.
- ACB fire extinguisher is recommended for putting out the fire. (water may also be used).

Precautions in case of high voltage battery gas or electrolyte leakage

-

Turn OFF the Start button. Keep the Smart Key at least 2 meters away from the vehicle to prevent unintended engine start.

- Gas is hydrogen and alkaline vapor. If the leakage is indoor, ventilate the area immediately and evacuate to a safe location.
- If the leaked liquid comes in contact with skin, immediately neutralize the affected area with boric acid solution, then clean with tap water or saline solution.
- If the leaked vapor or liquid gets in the eye, immediately clean the affected eye with water then get medical attention.
- If the gas leakage is caused by high temperature, then do NOT use the battery until the high voltage battery fully cools down to room temperature.

Precautions when handling the vehicle after an accident

- Be sure to wear insulated gloves (or rubber gloves), protective goggles, insulated suite, and insulated boots.
- Do NOT touch bare cable under any condition.
  (Refer to "Precautions when handling power cable")
- In case of vehicle fire, put out the fire with ABC extinguisher. Do NOT use water (usage of large volume of water is okay, but small volume can worsen the situation).
- If more than half of the vehicle is submerged, then do NOT go near the Safety Switch or other high voltage related components. If such a component must be accessed, then move the vehicle to the safe location first before handling the component.
- Gas is hydrogen and alkaline vapor. If the leakage is indoor, ventilate the area immediately and evacuate to a safe location.
- If the leaked liquid comes in contact with skin, immediately neutralize the affected area with boric acid solution, then clean with tap water or saline solution.
- Refer to "High voltage cut-off procedure" if the high voltage needs to be cut off.

Preparations when servicing the accident vehicle

- Be sure to wear insulated gloves (or rubber gloves), protective goggles, insulated suite, and insulated boots.
- Boric Acid Power or Solution
- ABC Extinguisher
- Towel for cleaning electrolyte
- Vinyl tape (for insulating terminal)
- Mega ohm tester (for checking high voltage)

Precautions in case HEV is left unattended for a lengthy period

- Turn OFF the Start button. Keep the Smart Key at least 2 meters away from the vehicle to prevent unintended engine start.
- We recommend that HEV is driven at least 1 time for over 30 minutes every 2 months to protect and manage the high voltage battery (inquire at relevant team in HMC).
- When inspecting or exchanging the auxiliary battery, check high voltage battery SOC reset related problems.

Hybrid Vehicle Refrigerant Recovery / Charging Precautions

- Since the electric compressor uses high-voltage, you should use POE oil which have high Volumetric Resistivity.
- Do not use the same A/C recovery / charging station as conventional belt-driven compressors.

WARNING

- If the POE oil of the system gets mixed with PAG oil, then dielectric breakdown due to decreased volumetric Resistivity can occur and inoperative A/C compressor may result, A/C compressor may not work

High Voltage Shut-off Procedures

WARNING

- Be sure to read and follow the "General Safety Information and Caution" before doing any work related with the high voltage system. Failure to follow the safety instructions may result in serious electrical injuries.
- Be sure to read and follow the "High Voltage Shut-off Procedures" before doing any work related with the high voltage system. Failure to follow the safety instructions may result in serious electrical injuries.

Information

- High voltage components :
  High Voltage Battery Pack Assembly, Power Relay Assembly (PRA), BMS ECU, Hybrid Power Control Unit (HPCU), Hybrid Drive Motor, HSG, Electric A/C Compressor, Low DC/DC Converter (LDC), Power Cable, Electric Compressor etc.

1. Turn the ignition switch OFF and disconnect the auxiliary 12V battery negative (-) terminal.

2. Remove the safety plug cover (A).

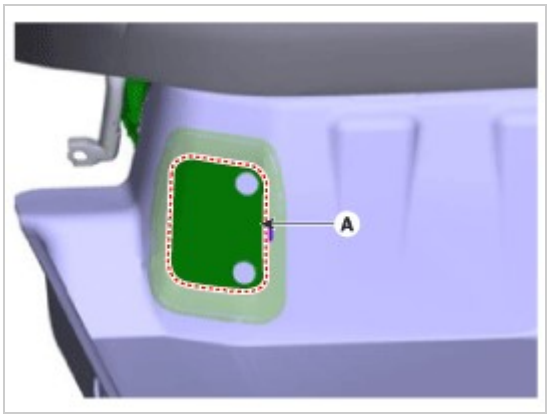

3. Unfasten the hook (A) and then remove the safety plug (C) by pulling the lever (B) to the direction of arrow.

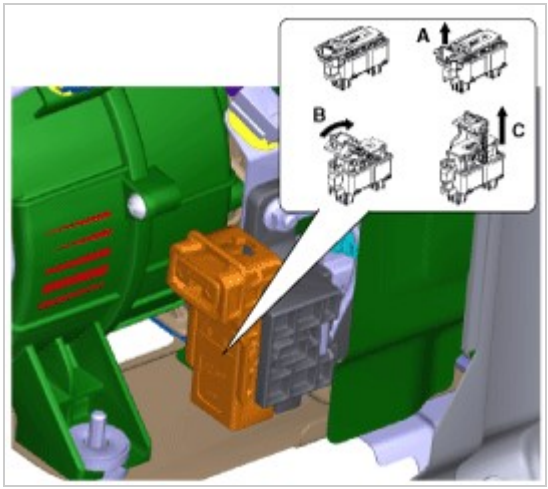

4. Wait for more than 5 minutes so that the capacitor in the high voltage system can be fully discharged.
5. Measure the voltage between the inverter terminals to check that the capacitor in the inverter is discharged completely.
   (1) Remove air cleaner assembly and air duct.
   (Refer to Engine Mechanical System - "Air Cleaner")
   (2) Disconnect the inverter power cable (A).

Information

- Disconnect the inverter power cable as the procedures below.

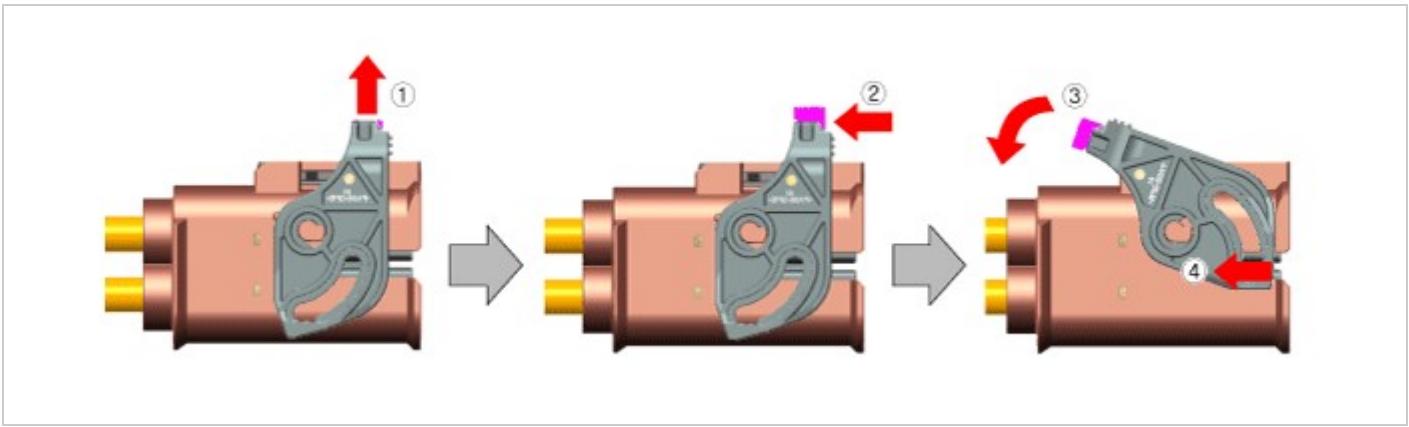

(3) Measure the voltage between the inverter (+) terminal and the inverter (-) terminal.

Less than 30V : High voltage circuit properly shut
More than 30V : Fault on high voltage circuit

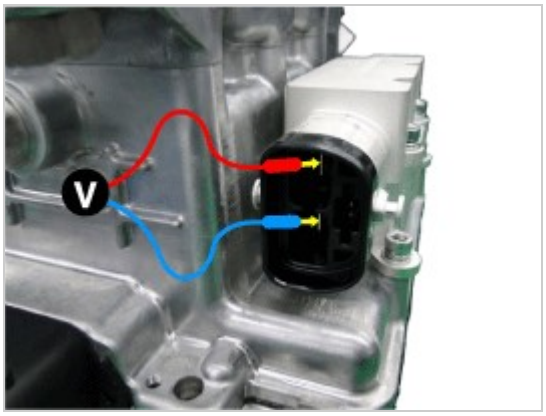

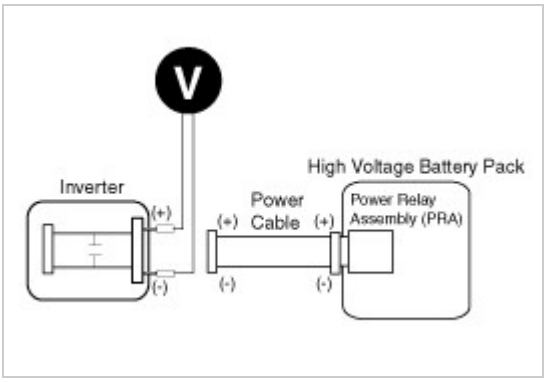

WARNING

- If measured more than 30V, check if the safety plug is removed completely.If measured more than 30V despite the safety plug is removed, there can be serious problems on the high voltage circuit. In this case, check DTC and never touch the high voltage system circuits.

High voltage battery system inspection guide

WARNING

- Be sure to read and follow the “General Safety Information and Caution” before doing any work related with the high voltage system. Failure to follow the safety instructions may result in serious electrical injuries.

1. Carry out a visual inspection to determine whether the vehicle requires general repair or accident repair.
2. For the general repair, perform the repair based on the repair process for that DTC code.
3. For the car accident repair, determine the accident type before repair.

1) Electrical Accidents

– Over-charge/discharge: Displays a battery over voltage (P1B71) code /low voltage (P1B70) code (Refer to the DTC diagnosis guide).
– Short: Displays a high voltage short (P1B77, P1B25) codes (Refer to the DTC diagnosis guide).

2) Fire

Classification	Inspection process	Inspection results		Measures
Fire outside of the high voltage battery mount ※Example) Engine fire	1. Perform visual inspections (deformation, corrosion, wire coating, odor, connector). 2. Check for main fuse open circuit after shutting off the high voltage. 3. Check the high voltage main relay for signs of welding. 4. Measure the high voltage battery/chassis insulation resistance. 5. Check other parts for failure. 6. Check the DTC code in the BMS ECU.	High voltage battery insulation damaged		Remove the high voltage battery and repair the insulation process/coating.
		High voltage battery not damaged	DTC code	If a DTC code occurs, comply with DTC diagnosis guide and repair process.
			No DTC code and battery appears normal	Do not replace the high voltage battery (if the battery is damaged and must be disposed of, perform the high voltage battery disposal process).
Fire in the high voltage battery mount	1. Perform visual inspections (deformation, corrosion, wire coating, odor, connector).	High voltage battery appears damaged (heat, soot, etc.)		Remove the service disconnect plug and perform the salt water battery disposal process.

※Example) Trunk fire	2. Check for visible damage of the high voltage battery. 3. Check the high voltage main relay for signs of welding after shutting off the high voltage if no visible damage is found in the high voltage battery. 4. Measure the high voltage battery/chassis insulation resistance. 5. Check other parts for failure. 6. Check the DTC code in the BMS ECU.	High voltage battery insulation damaged		Remove the high voltage battery and repair the coating/insulation.
		High voltage battery not damaged	DTC code	If a DTC code occurs, perform the repair process outlined in the DTC diagnosis guide.
			No DTC code and battery appears normal	Do not replace the high voltage battery (if the battery is damaged and must be disposed of, perform the high voltage battery disposal process).

3) Collision

Classification	Inspection process	Inspection results		Measures
Collision damage to areas other than the high voltage battery mount ※Example) Front/side collision	1. Perform visual inspections (deformation, corrosion, wire coating, odor, connector). 2. Check for main fuse open circuit after shutting off the high voltage. 3. Check the high voltage main relay for signs of melting. 4. Measure the high voltage battery/chassis insulation resistance. 5. Check other components. 6. Check the DTC code in the BMS ECU.	High voltage battery insulation damaged		Remove the high voltage battery and repair the coating/insulation.
		High voltage battery not damaged	DTC code	If a DTC code occurs, perform the repair process outlined in the DTC diagnosis guide.
			No DTC code and battery appears normal	Do not replace the high voltage battery (if the battery is damaged and must be disposed of, perform the high voltage battery disposal process).
Collisions involving the high voltage battery mount ※Example) Rear-end collision	1. Perform visual inspections (deformation, corrosion, wire coating, odor, connector). 2. Check for main fuse open circuit after shutting off the high voltage. 3. Check the high voltage main relay for signs of melting. 4. Measure the high voltage battery/chassis insulation resistance. 5. Check other components. 6. Check the DTC code in the BMS ECU.	High voltage battery insulation damaged		⇑ Follow the measures outlined above. ※ If the high voltage battery mount is inaccessible due to trunk or door damage, bend or cut the exterior panels without damaging the high voltage system and carry out the inspection and repair process.
		High voltage battery not damaged	DTC code	
			No DTC code and battery appears normal	

4) Submersion

Classification	Inspection process	Inspection results		Measures
High voltage battery not submerged	1. Perform a visual inspection (deformation, corrosion, wire coating, odor, connector). 2. Check for main fuse open circuit after shutting off the high voltage. 3. Check the high voltage main relay for signs of melting. 4. Measure the high voltage battery/chassis insulation resistance. 5. Check other components. 6. Check the DTC code in the BMS ECU.	High voltage battery insulation damaged		Remove the high voltage battery and repair the coating/insulation.
		High voltage battery not damaged	DTC code	If a DTC code occurs, perform the repair process outlined in the DTC diagnosis guide.
			No DTC code and battery appears normal	Do not replace the high voltage battery (if the battery is damaged and must be disposed of, perform the high voltage battery disposal process).
High voltage battery submerged [Regardless of water conditions]	1. Check for main fuse open circuit after shutting off the high voltage. 2. Check the high voltage main relay for signs of melting. 3. Measure the high voltage battery/chassis insulation resistance. 4. Check the DTC code in the BMS ECU.	Carry out these measures regardless of the inspection results		Remove the high voltage battery and repair the coating/insulation.

Main Fuse Inspection

1. Remove the safety plug lever (A).
2. Remove the safety plug cover (A) and then remove the main fuse (B) by removing the mounting bolts.

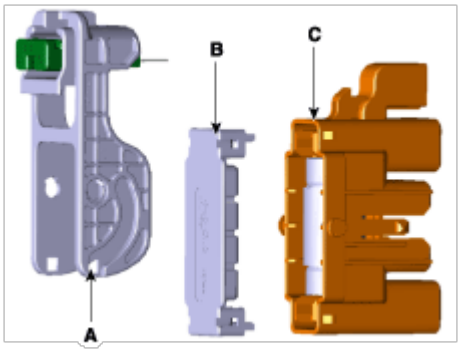

3. Measure the resistance of main fuse.

Specification:1 Ω or less Ω [20°C(68°F]

4. If the measured resistance is not within the specification, replace the main fuse.

Checking for Welding in the High Voltage Main Relay

In order to safely remove the battery pack assembly, you must first inspect the high voltage main relay for signs of weld damage. You can use Gloval Diagnostic System (GDS) service data to detect weld damage in the high voltage main relay.

[Using GDS service data to check for main relay weld damage]

1. Connect the GDS to the self-diagnosis connector (DLC).
2. Turn on the ignition.
3. Check the BMS weld damage state in the GDS service data.

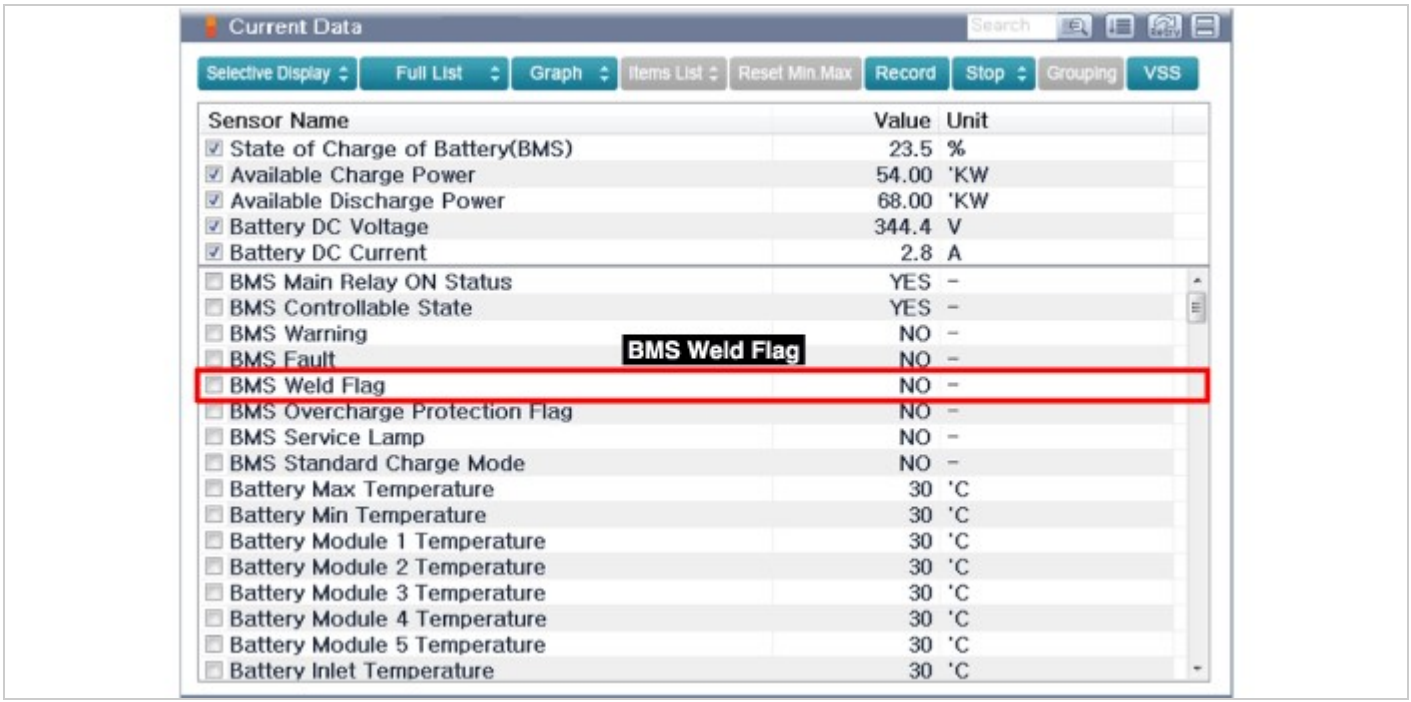

Sensor Name	Value	Unit
State of Charge of Battery(BMS)	23.5	%
Available Charge Power	54.00	'KW
Available Discharge Power	68.00	'KW
Battery DC Voltage	344.4	V
Battery DC Current	2.8	A
BMS Main Relay ON Status	YES	-
BMS Controllable State	YES	-
BMS Warning	NO	-
BMS Fault	NO	-
BMS Weld Flag	NO	-
BMS Overcharge Protection Flag	NO	-
BMS Service Lamp	NO	-
BMS Standard Charge Mode	NO	-
Battery Max Temperature	30	'C
Battery Min Temperature	30	'C
Battery Module 1 Temperature	30	'C
Battery Module 2 Temperature	30	'C
Battery Module 3 Temperature	30	'C
Battery Module 4 Temperature	30	'C
Battery Module 5 Temperature	30	'C
Battery Inlet Temperature	30	'C

[Using a Multimeter to measure weld damage]

WARNING

- Be sure to read and follow the "General Safety Information and Caution" before doing any work related with the high voltage system. Failure to follow the safety instructions may result in serious electrical injuries.

1. Shut off the high voltage.
   (Refer to "High voltage Shut-off Procedures").
2. Remove the rear seat cushion.
   (Refer to Body - "Rear Seat Assembly")
3. Remove the rear door scuff trim.
   (Refer to Body - "Door Scuff Trim")
4. Remove the inlet duct.
   (Refer to Hybrid Control System - "Cooling Duct")
5. Remove the high voltage battery rear cover.
   (Refer to High Voltage Battery System - "Case")
6. Disconnect the high voltage (-) connector (A) and high voltage (+) connector (B).

7. Measure the high voltage main relay resistance and check for signs of weld damage.

   Specification:∞ Ω [20°C (68°F)]

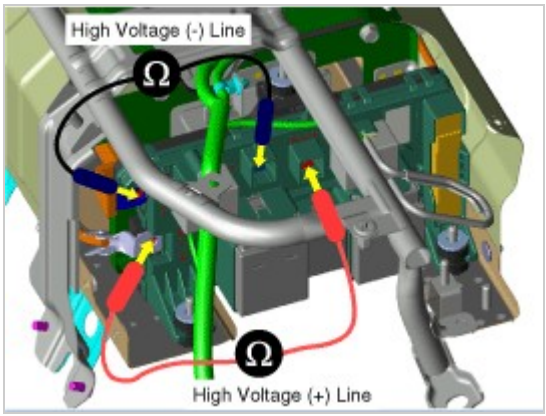

Isolation Resistance Inpection

The high voltage isolation used in hybrid systems can be checked using GDS service data or by measuring it directly.

[Using GDS service data to check isolation resistance]

1. Connect the GDS to the self-diagnosis connector (DLC).
2. Turn on the ignition.
3. Check the isolation resistance in the GDS service data.

   Normal insulation resistance range: Around 1.0 MΩ

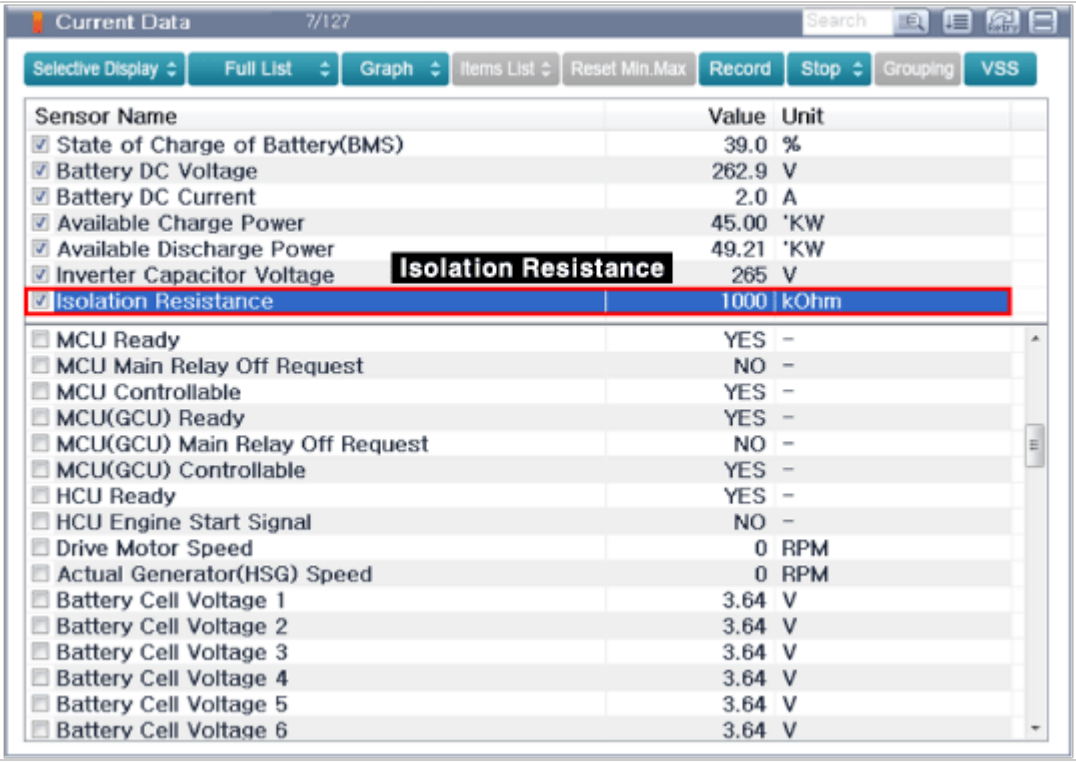

[Measuring isolation resistance using an insulation tester (MΩ tester)]

⚠ WARNING

- Be sure to read and follow the "General Safety Information and Caution" before doing any work related with the high voltage system. Failure to follow the safety instructions may result in serious electrical injuries.

1. Shut off the high voltage circuit.
   (Refer to Hybrid Control System - "High Voltage Shut-off Procedures")
2. Remove the rear seat cushion.
   (Refer to Body - "Rear Seat Assembly")
3. Remove the rear door scuff trim.
   (Refer to Body - "Door Scuff Trim")
4. Remove the inlet cooling duct.
   (Refer to High Voltage Battery Cooling System - "Cooling Duct")
5. Remove the high voltage battery rear cover.
   (Refer to High Voltage Battery System - "Case")
6. Connect the insulation tester (-) terminal (A) to the battery system case (or ground).

7. Connect the insulation tester (+) terminal to the high voltage battery (+) and (-). Measure the resistance.
   [Measure the isolation resistance on the power relay assembly high voltage power terminal (+)]
   (1) Connect the insulation tester (+) terminal to the (+) PRA high voltage power terminal (A).
   (2) Supply 500V through the insulation tester and wait one minute to measure the stable resistance.
   (3) Check the isolation resistance.

   Normal insulation resistance range : Above 1.0 MΩ [20°C (68°F)]

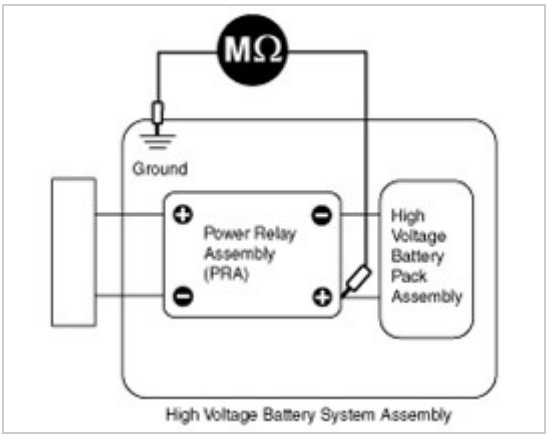

[Measure the isolation resistance on the power relay assembly high voltage power terminal (-)]

(1) Connect the insulation tester (+) terminal to the (-) PRA high voltage power terminal (B).

(2) Supply 500V through the insulation tester and wait one minute to measure the stable resistance.

(3) Check the isolation resistance.

Normal insulation resistance range : Above 1.0 MΩ [20°C (68°F)]

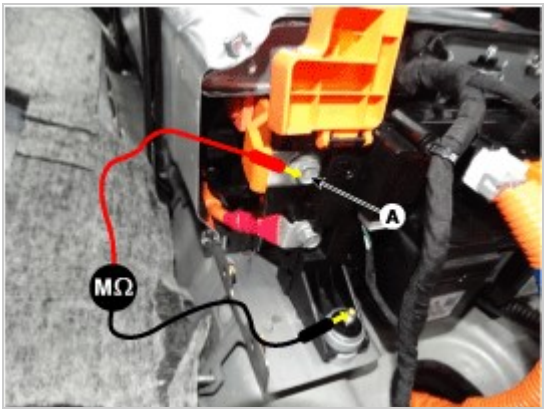

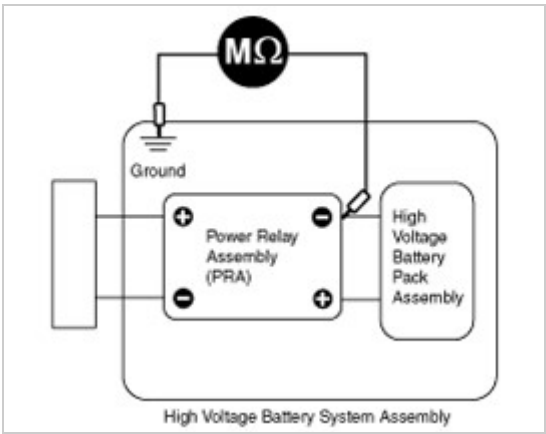

[Measure the isolation resistance on the power relay assembly inverter power terminal (+)]

Information

- When measuring the insulated resistance on each PRA inverter, use a contact pin to prevent damage on the connector and for more accurate measurement.

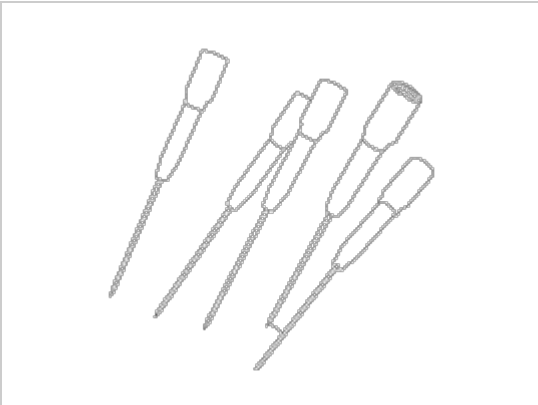

(1) Connect the insulation tester (+) terminal to the (+) PRA inverter power terminal (A).

(2) Supply 500V through the insulation tester and wait one minute to measure the stable resistance.

(3) Check the isolation resistance.

Normal insulation resistance range : Above 1.0 MΩ [20°C (68°F)]

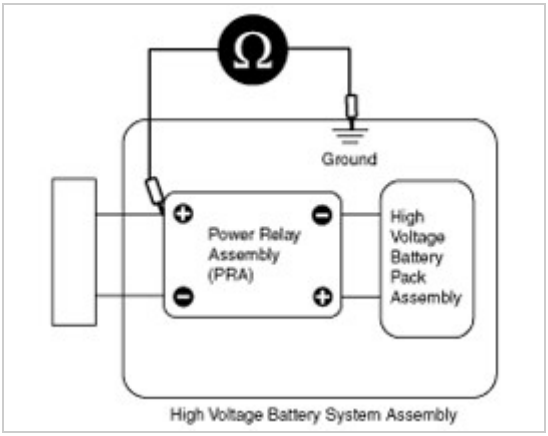

[Measure the isolation resistance on the power relay assembly inverter power terminal (-)]

Information

- When measuring the insulated resistance on each PRA inverter, use a contact pin to prevent damage on the connector and for more accurate measurement.

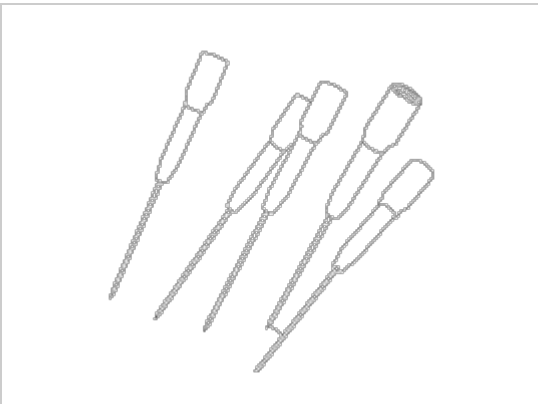

(1) Connect the insulation tester (+) terminal to the (-) PRA inverter power terminal (B).

(2) Supply 500V through the insulation tester and wait one minute to measure the stable resistance.

(3) Check the isolation resistance.

Normal insulation resistance range : Above 1.0 MΩ [20°C (68°F)]

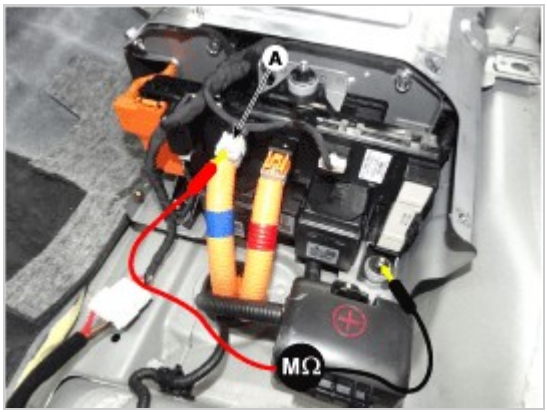

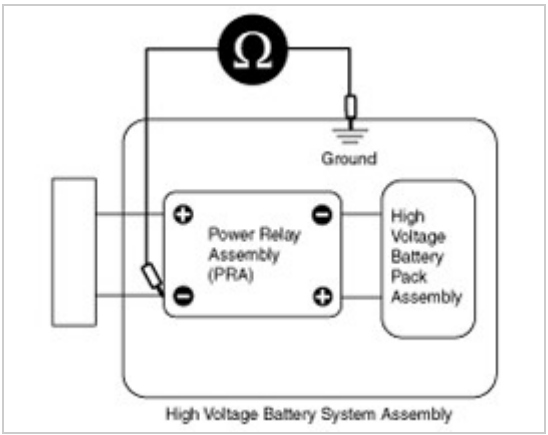

Handling Guide for Storing, Transporting, and Disposing of High Voltage Battery Systems

1. High voltage battery system handling process

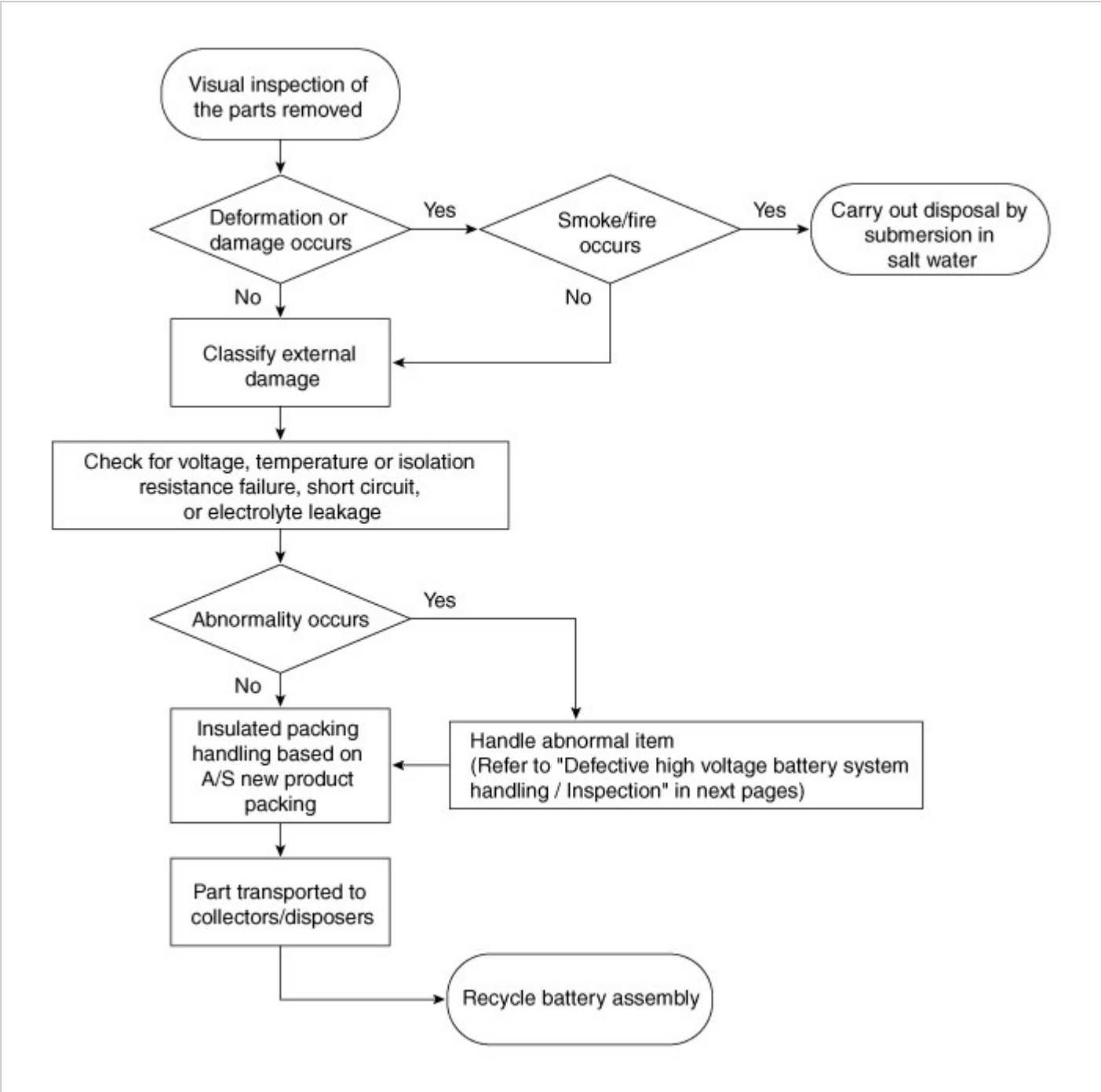

2. Defective high voltage battery system handling / Inspection

Classification		Item	Measures
Undamaged Battery		Storage	Remove the service disconnect and store the battery under the same conditions as a new battery.
		Transport	Minimize impacts and ensure the battery does not come in contact with other parts.
		Disposal	Transport the battery to the designated disposer
Damaged battery	Common	Inspection method	1. **Voltage check**(using a digital multimeter) (1) Measure the voltage between the service disconnect plug upper (+) terminal and [High voltage battery – PRA] connecting cable (-) terminal. → **Specification: About 150 V** (2) Measure the voltage between the service disconnect plug lower (-) terminal and [High voltage battery – PRA] connecting cable (+) terminal. → **Specification: About 120 V** ▶ Measures: If abnormal, submerse the battery in salt water immediately to prevent fire. 2. **Temperature check**(using a non-contact thermometer) (1) Check the temperature of battery case. (2) Check for temperature changes by measuring the temperature again after 30 minutes. ▶ Criteria: The change should be 3 °C or less and the temperature should be below 35 °C. ▶ Measures – If the temperature is higher than 35°C, place the battery in a cool, dry place and wait for the battery temperature to return to 35°C. – If the temperature change is more than 3°C and it continues to rise, submerse the battery in salt water immediately. –

			If the temperature continues to rise when measuring it at 30 minute intervals, submerse the battery in salt water immediately. 3. **Isolation resistance check**(using a MΩ tester) (1) Measure the isolation resistance between the power relay terminal (+) and the battery pack cover. (2) Measure the isolation resistance between the power relay terminal (-) and the battery pack cover. ▶ Criteria: 5MΩ or less (at 500V) ▶ Measures: Insulate the battery using insulating materials. (Refer to "Take insulation actions for parts that may short circuit.) 4. **Take insulation actions for parts that may short circuit**(Visual inspection) (1) High voltage battery – PRA cable terminal (2) BMS voltage sensing connector ▶ Insulation actions – Use the insulation tape or rubber cap to prevent short circuit to the battery pack, cells, modules. – Fix the connector terminal to prevent wiring from moving. 5. **Electrolyte leakage check** – Check for odors within 30cm of the battery pack (electrolyte odors like chemicals or acryl). ▶ Measures: Submerse the battery in salt water immediately if a smell is detected.
Damaged battery	Damaged battery check results: normal	Storage	Remove the service disconnect plug and store the battery under the same conditions as a new battery.
		Transport	Minimize impacts and ensure the battery does not come in contact with other parts.
		Disposal	Transport the battery to the designated disposer; discharge it by submersing it completely in salt water and carry out the disposal procedure.
	Damaged battery check results: abnormal	Storage	Remove the service disconnect plug; insulate all exposed terminals; place the battery in a cool, dry place away from volatile or combustible substances; use insulating materials (insulation tape, rubber caps, etc.) or vinyl to wrap the battery; use anti-shock materials inside the box. ▶ Insulation action: Refer to "Take insulation actions for parts that may short circuit. ▶ Packing: Abnormal battery must be packed as same as a new battery.
		Transport	Minimize impacts and ensure the battery does not come in contact with other parts.
		Disposal	Transport the battery to the designated disposer; discharge it by submersing it completely in salt water and carry out the disposal procedure.

Voltage Check

⚠WARNING

- Be sure to read and follow the “General Safety Information and Caution” before doing any work related with the high voltage system. Failure to follow the safety instructions may result in serious electrical injuries.

1. Measure the voltage between the service disconnect plug upper (+) terminal and [High voltage battery –PRA] connecting cable (-) terminal.
   → **Specification: About 150 V**
2. Measure the voltage between the service disconnect plug lower (-) terminal and [High voltage battery –PRA] connecting cable (+) terminal.
   → **Specification: About 120 V**

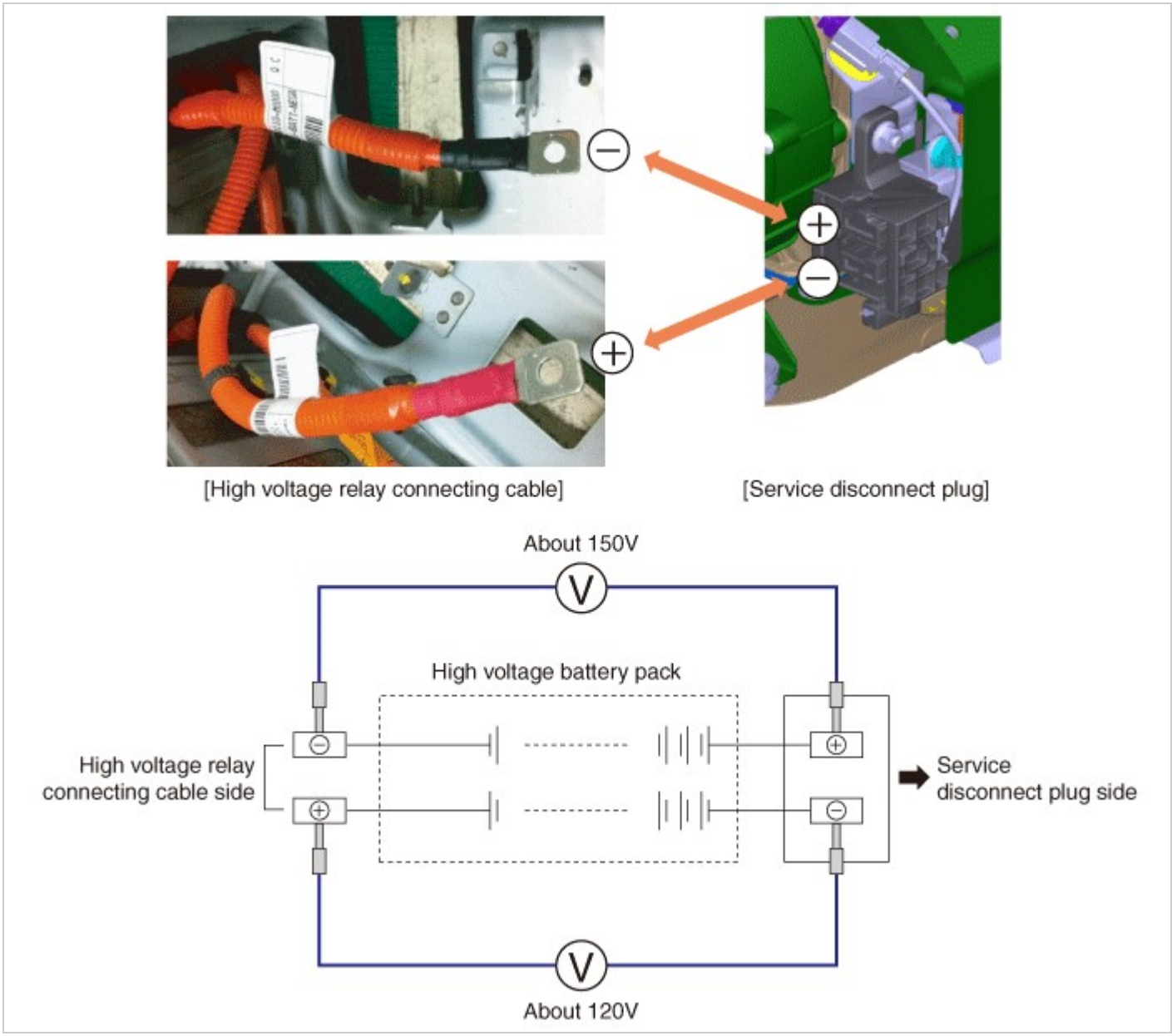

Take insulation actions for parts that may short circuit

1. High voltage battery – PRA cable terminal

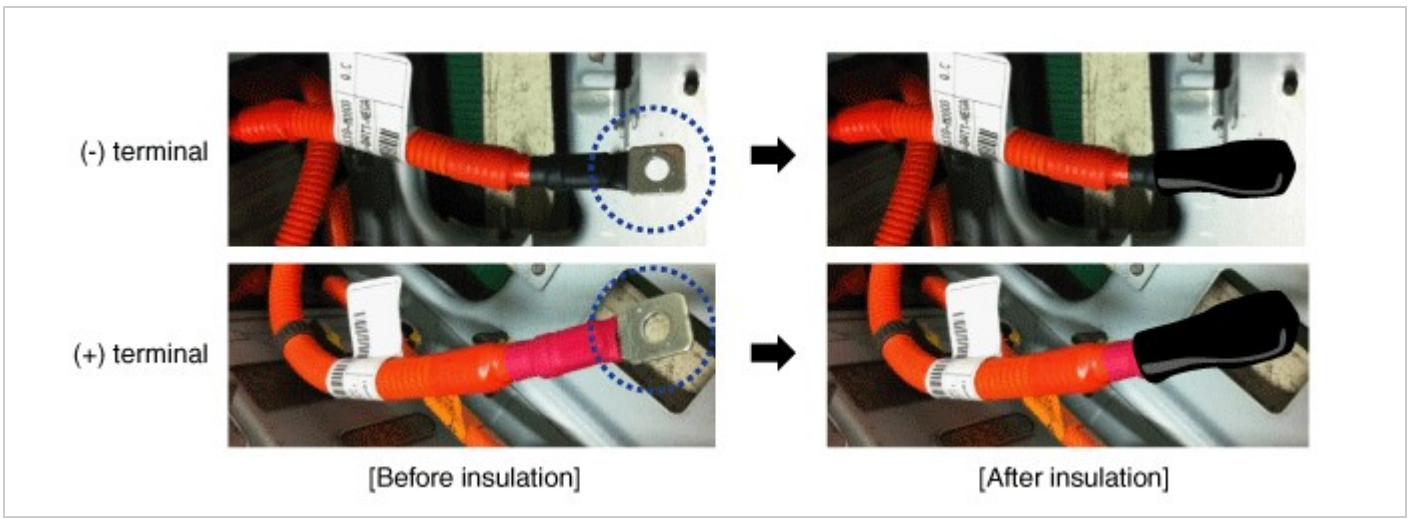

– Place the insulation tape or rubber cap around the (+), (-) cable terminal to prevent short circuit to the battery pack.
– Secure the cable to the battery pack case with the insulation tape to prevent cables from moving.

2. BMS voltage sensing connector

▶ **Insulation actions**

– Place the insulation tape or rubber cap around connectors to prevent short circuit to the battery cells, modules.

– Secure the wiring to the battery pack case with the insulation tape to prevent wiring from moving.

Discharging high voltage batteries

⚠ WARNING

- Be sure to read and follow the “General Safety Information and Caution” before doing any work related with the high voltage system. Failure to follow the safety instructions may result in serious electrical injuries.

High voltage batteries can cause electric shocks or other injuries. If the following symptoms are detected in a high voltage battery, discharge it as soon as possible by submersing it in salt water.

– There are traces of fire or smoke.

– The voltage of the battery is abnormally high (302 V or higher).

– The temperature of the high voltage battery continues to rises abnormally.

– It smells like chemicals or acryl, which suggests electrolyte leakage.

[Discharging a battery by submersing it in salt water]

1. Pour about 53 gallons (200 liters) water into a plastic container (Ex. Poly Propylene) that cans submerge the whole battery.
2. Add 238 pounds of salt to the water. Stir the water until the salt dissolves into the solution.

Information

- [The amount of salt] = 0.538 * [The amount of water that a battery can be fully immersed]

3. Use a lift jack to submerge the high voltage battery in the salt water.
4. Leave the battery in the salt water for 12 hours before taking it out a drying it thoroughly.

NOTICE

- The battery should be dried in a ventilated shade to avoid direct sunlight, snow and rain.

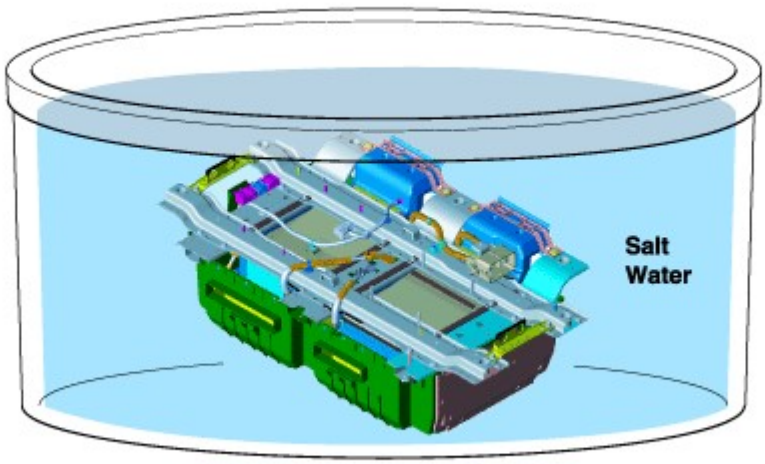

WARNING

- Put only one high voltage battery in a single salt water tank.
- If you discharge more than one battery, put in the battery after discharging the previous battery completely to ensure safety.
- If not, unexpected accidents such as burns may occur by exothermic reaction.

Procedure for entering engine forced activation mode

If the engine needs to be running constantly while the vehicle is stopped to inspect emission gas or perform maintenance on the vehicle, follow below procedure to enter engine forced activation mode.

1. Place the shift lever in P range while the vehicle is stopped. Engage the parking brake. Then follow below procedure and enter engine forced activation mode.

Information

- Below procedure [(1) - (5)] for engine forced activation mode must be completed within 60 sec. In case the procedure is not completed within the time, the process is reset and you must start again from step (1).

(1) Do NOT press on the brake pedal and press the Engine Start/Stop button 2 times to enter IG ON mode.

(2) Place the shift lever in P range and then press the accel pedal 2 times.

(3) Place the shift lever in N range and then press the accel pedal 2 times.

(4) Place the shift lever in P range and then press the accel pedal 2 times.

(5) Press on the brake pedal and press the Engine Start/Stop button to start the engine, and maintain idling.

Information

- Engine will continue to remain idling and engine forced activation mode is maintained even if the gear is shifted to different range.

2. "READY" lamp blinks in the Cluster when the vehicle is in engine forced activation mode. Check that the "READY" lamp is blinking to ensure that engine forced activation mode is entered correctly.

Information

- "READY" lamp will continue to blink until engine forced activation mode is cancelled. "READY" lamp will stop blinking when the forced activation mode is cancelled.

3. Engine forced activation mode can be cancelled by pressing the Engine Start/Stop button and switching to IG OFF mode.

Basic Troubleshooting

Basic Inspection Procedure

Measuring Condition of Electronic Parts" Resistance

The measured resistance at high temperature after vehicle running may be high or low. So all resistance must be measured at ambient temperature (20°C, 68°F), unless stated otherwise.

NOTICE

- The measured resistance in except for ambient temperature (20°C, 68°F) is reference value.

Intermittent Problem Inspection Procedure

Sometimes the most difficult case in troubleshooting is when a problem symptom occurs but does not occur again during testing. An example would be if a problem appears only when the vehicle is cold but has not appeared when warm. In this case, the technician should thoroughly make out a "Customer Problem Analysis Sheet" and recreate (simulate) the environment and condition which occurred when the vehicle was having the issue.

1. Clear Diagnostic Trouble Code (DTC).
2. Inspect connector connection, and check terminal for poor connections, loose wires, bent, broken or corroded pins, and then verify that the connectors are always securely fastened.

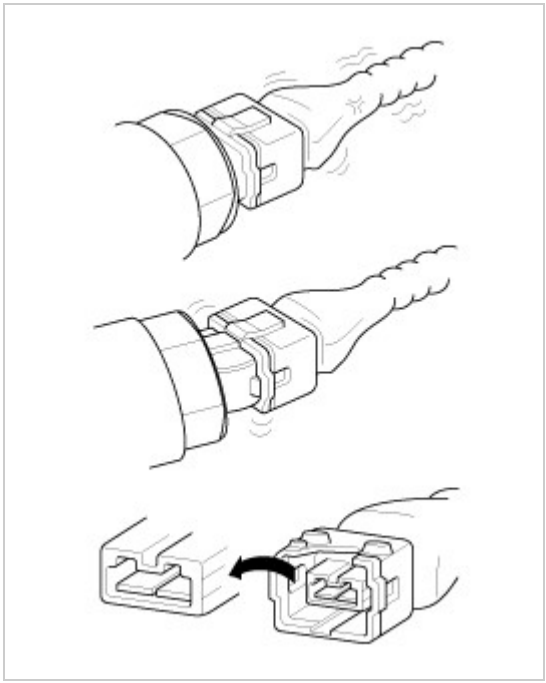

3. Slightly shake the connector and wiring harness vertically and horizontally.
4. Repair or replace the component that has a problem.
5. Verify that the problem has disappeared with the road test.

● Simulating Vibration

a. Sensors and Actuators
: Slightly vibrate sensors, actuators or relays with finger.

> **WARNING**
> • Strong vibration may break sensors, actuators or relays

b. Connectors and Harness
: Lightly shake the connector and wiring harness vertically and then horizontally.

● Simulating Heat

a. Heat components suspected of causing the malfunction with a hair dryer or other heat source.

> **WARNING**
> • DO NOT heat components to the point where they may be damaged.
> • DO NOT heat the ECM directly.

● Simulating Water Sprinkling

a. Sprinkle water onto vehicle to simulate a rainy day or a high humidity condition.

> **WARNING**
> • DO NOT sprinkle water directly into the engine compartment or electronic components.

● Simulating Electrical Load

a. Turn on all electrical systems to simulate excessive electrical loads (Radios, fans, lights, rear window defogger, etc.).

Connector Inspection Procedure

1. Handling of Connector
   a. Never pull on the wiring harness when disconnecting connectors.

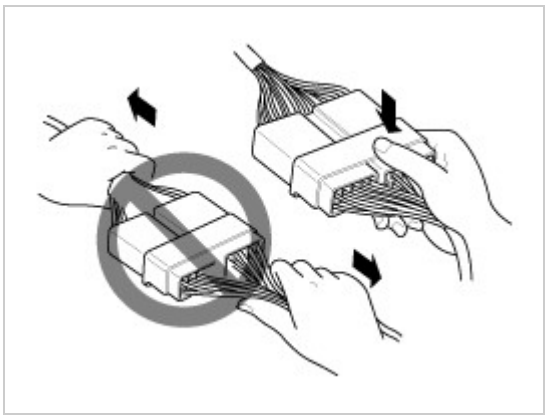

b. When removing the connector with a lock, press or pull locking lever.

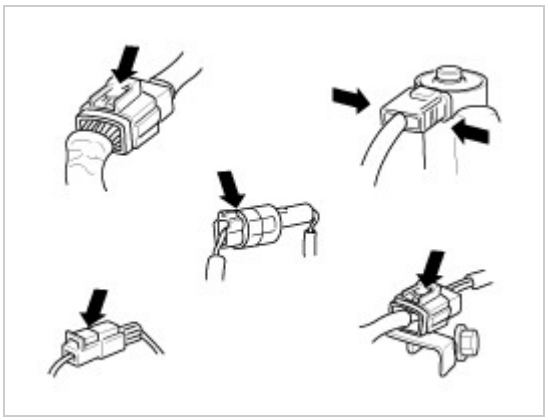

c. Listen for a click when locking connectors. This sound indicates that they are securely locked.

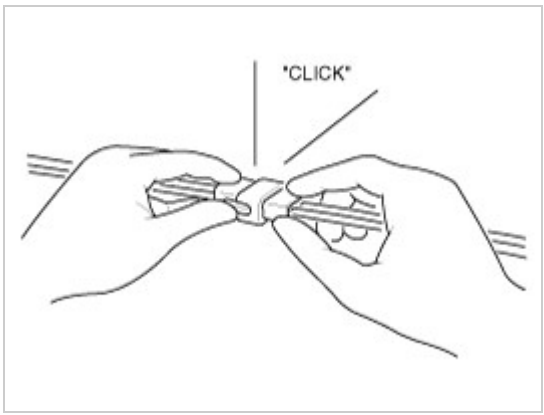

d. When a tester is used to check for continuity, or to measure voltage, always insert tester probe from wire harness side.

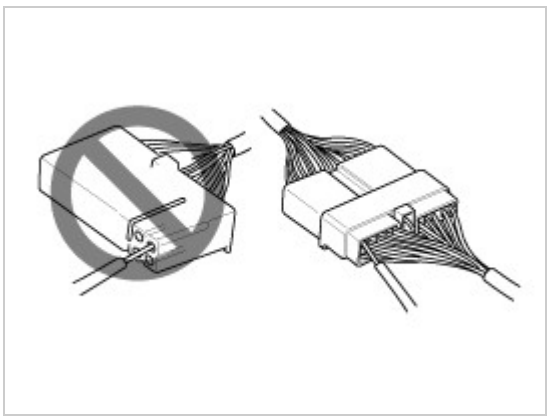

e. Check waterproof connector terminals from the connector side. Waterproof connectors cannot be accessed from harness side.

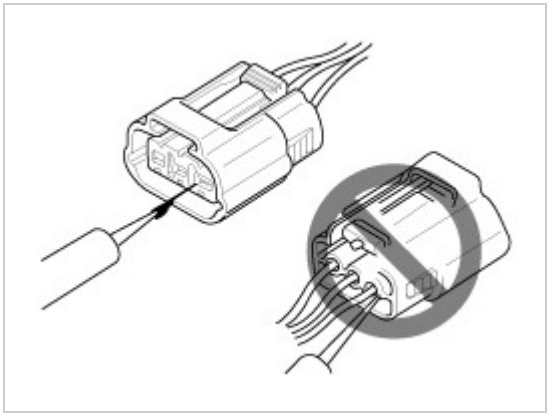

NOTICE

- Use a fine wire to prevent damage to the terminal.
- Do not damage the terminal when inserting the tester lead.

2. Checking Point for Connector
   a. While the connector is connected:
      Hold the connector, check connecting condition and locking efficiency.
   b. When the connector is disconnected:
      Check missed terminal, crimped terminal or broken core wire by slightly pulling the wire harness.
      Visually check for rust, contamination, deformation and bend.
   c. Check terminal tightening condition:
      Insert a spare male terminal into a female terminal, and then check terminal tightening conditions.
   d. Pull lightly on individual wires to ensure that each wire is secured in the terminal.

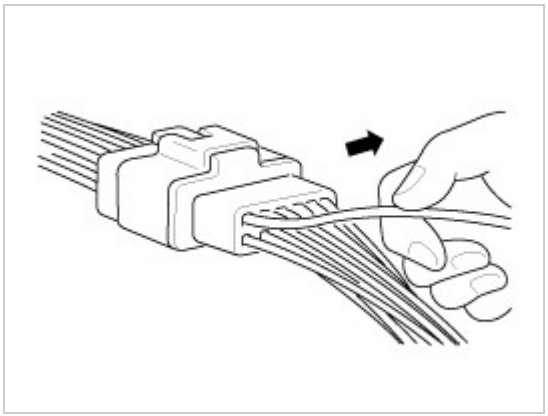

3. Repair Method of Connector Terminal
   a. Clean the contact points using air gun and/or shop rag.

NOTICE

- Never use sand paper when polishing the contact points, otherwise the contact point may be damaged.

   b. In case of abnormal contact pressure, replace the female terminal.

Wire Harness Inspection Procedure

1. Before removing the wire harness, check the wire harness position and crimping in order to restore it correctly.
2. Check whether the wire harness is twisted, pulled or loosened.
3. Check whether the temperature of the wire harness is abnormally high.
4. Check whether the wire harness is rotating, moving or vibrating against the sharp edge of a part.
5. Check the connection between the wire harness and any installed part.
6. If the covering of wire harness is damaged; secure, repair or replace the harness.

Electrical Circuit Inspection Procedure

● Check Open Circuit

1. Procedures for Open Circuit
   - Continuity Check
   - Voltage Check

If an open circuit occurs (as seen in [FIG. 1]), it can be found by performing Step 2 (Continuity Check Method) or Step 3 (Voltage Check Method) as shown below.

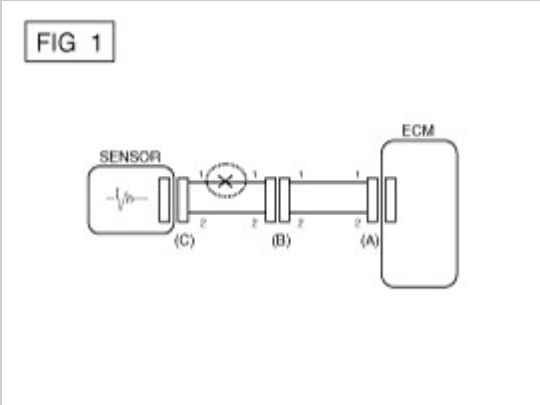

2. Continuity Check Method

> **NOTICE**
> • When measuring for resistance, lightly shake the wire harness above and below or from side to side.

Specification (Resistance)

1Ω or less → Normal Circuit

1MΩ or Higher → Open Circuit

a. Disconnect connectors (A), (C) and measure resistance between connector (A) and (C) as shown in [FIG. 2].
   In [FIG.2.] the measured resistance of line 1 and 2 is higher than 1kΩ and below 1 Ω respectively. Specifically the open circuit is line 1 (Line 2 is normal). To find exact break point, check sub line of line 1 as described in next step.

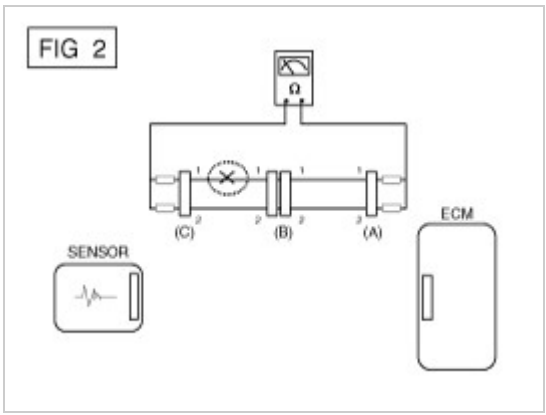

b. Disconnect connector (B), and measure for resistance between connector (C) and (B1) and between (B2) and (A) as shown in [FIG. 3].
   In this case the measured resistance between connector (C) and (B1) is higher than 1MΩ and the open circuit is between terminal 1 of connector (C) and terminal 1 of connector (B1).

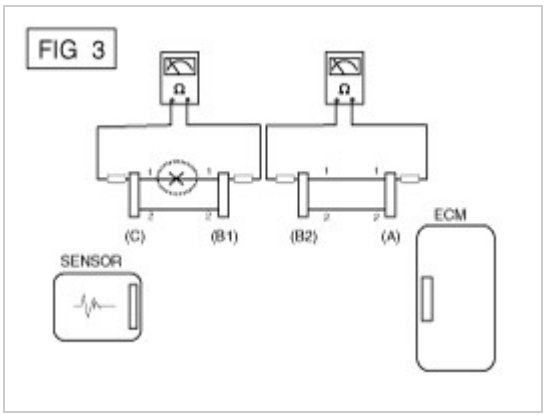

3. Voltage Check Method
   a. With each connector still connected, measure the voltage between the chassis ground and terminal 1 of each connectors (A), (B) and (C) as shown in [FIG. 4].
      The measured voltage of each connector is 5V, 5V and 0V respectively. So the open circuit is between connector (C) and (B).

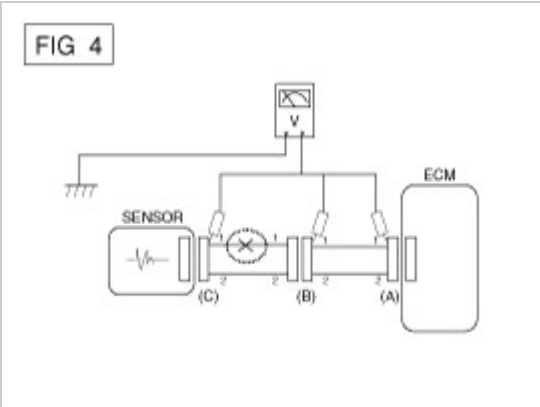

● Check Short Circuit

1. Test Method for Short to Ground Circuit
   - Continuity Check with Chassis Ground

   If short to ground circuit occurs as shown in [FIG. 5], the broken point can be found by performing Step 2 (Continuity Check Method with Chassis Ground) as shown below.

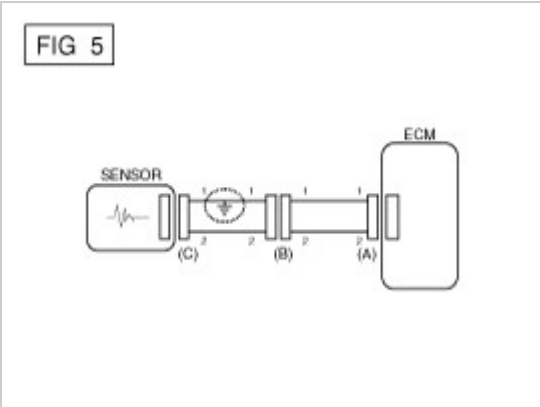

2. Continuity Check Method (with Chassis Ground)

NOTICE

- Lightly shake the wire harness above and below, or from side to side when measuring the resistance.

Specification (Resistance)

1Ω or less → Short to Ground Circuit

1MΩ or Higher → Normal Circuit

a. Disconnect connectors (A), (C) and measure for resistance between connector (A) and Chassis Ground as shown in [FIG. 6].

   The measured resistance of line 1 and 2 in this example is below 1 Ω and higher than 1MΩ respectively. Specifically the short to ground circuit is line 1 (Line 2 is normal). To find exact broken point, check the sub line of line 1 as described in the following step.

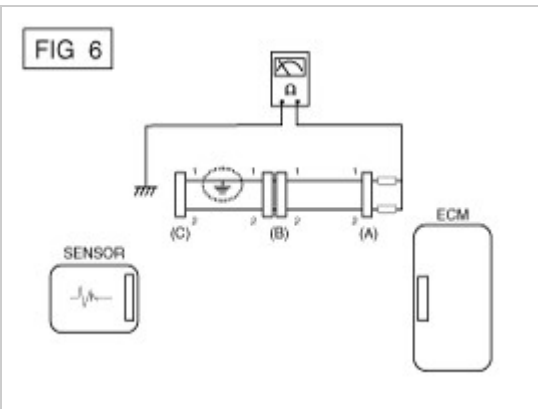

b. Disconnect connector (B), and measure the resistance between connector (A) and chassis ground, and between (B1) and chassis ground as shown in [FIG. 7].

   The measured resistance between connector (B1) and chassis ground is 1Ω or less. The short to ground circuit is between terminal 1 of connector (C) and terminal 1 of connector (B1).

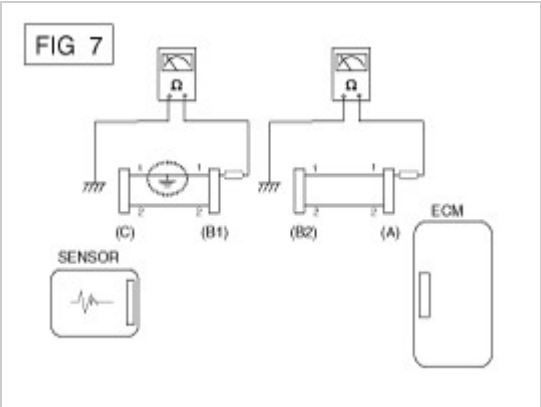

Personal Protective Equipment

Name	Illustration	Description
Insulation glove		Used when inspecting or working on the high voltage components [Insulation performance : 1000V / 300A or above]
Insulation shoes		
Insulation clothes		Used when inspecting or working on the high voltage components
Insulation helmet	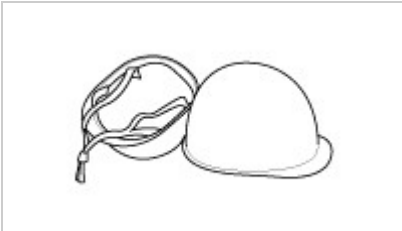	
Safety glasses		Used in the case below • During Removal & installation or inspection of the high voltage battery terminals or wiring, which spark might happen. • During working on the high voltage battery pack assembly.
Face shield		
Insulation mat		Putting the removed high voltage components on the insulation mat to prevent safety accidents.

	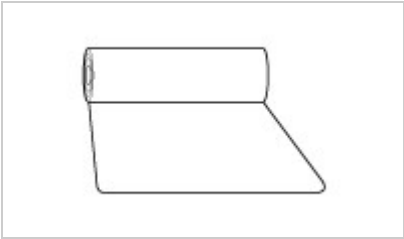	
Insulation sheet	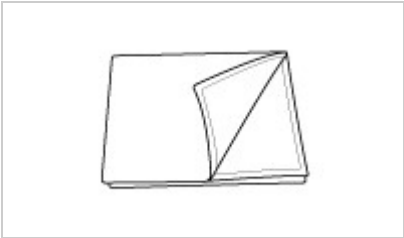	Covering the high voltage components with insulation sheet to prevent people who don't wear the personal protective equipment from safety accidents.

Hybrid Control System

Hybrid Electric Vehicle (HEV)

The Hybrid Electric Vehicle (HEV) uses hybrid power source (Engine, Electric motor), so its fuel efficiency is relatively high and exhaust emission is very small compared to the traditional vehicle which uses only engine as power source. It consists of the engine, motor, high voltage battery and control modules.

In Electric Vehicle (EV) mode, the HEV is driven by only the electric motor, but engine supports the motor in case the vehicle needs more power (HEV Mode).

The electric motor not only drives the vehicle but also generates electric energy during regenerative braking for charging the high voltage battery.

[HEV Operation Mode and Power Flow]

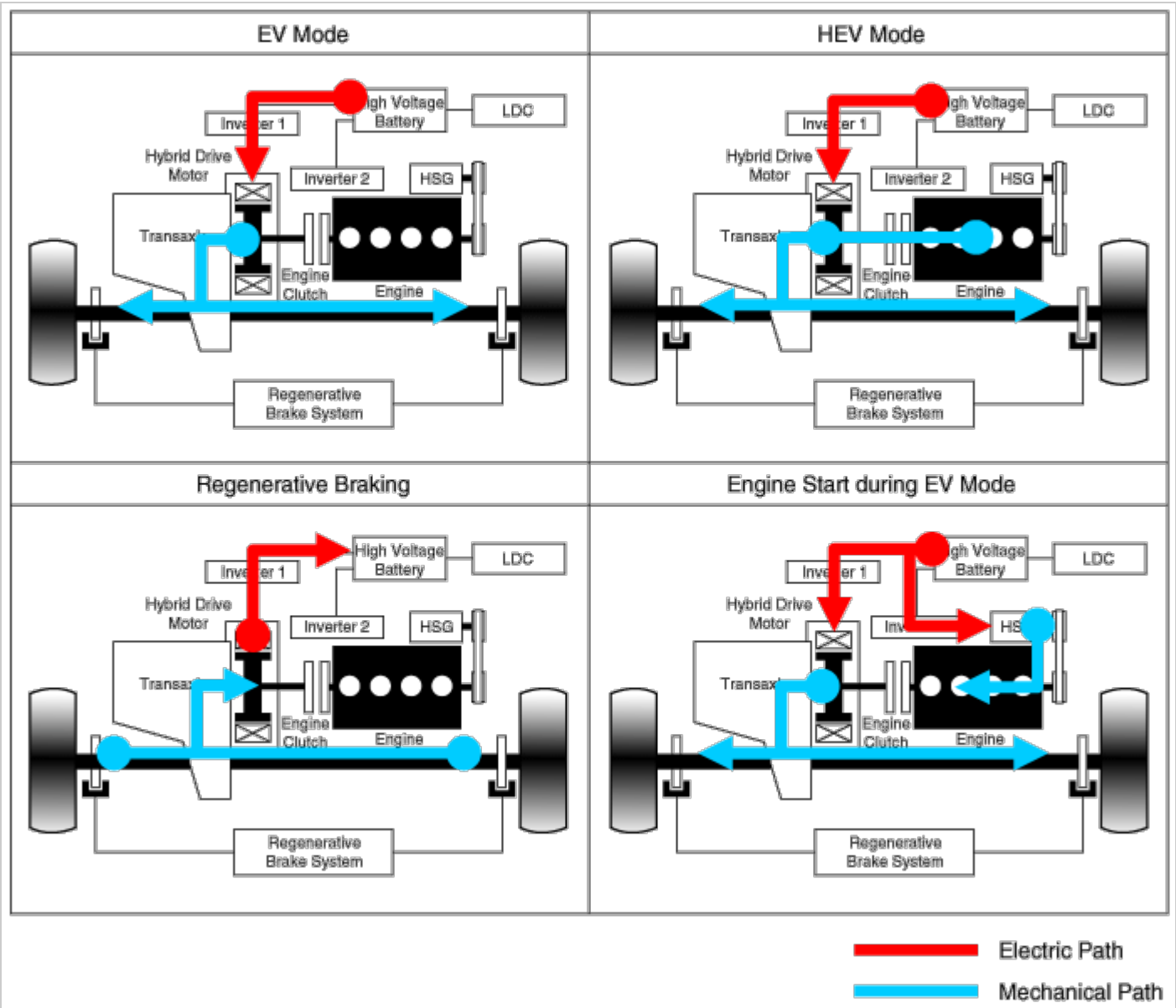

[Warning Lamp]

Items	Description	Related Control Module
1. MIL Lamp	• **Lamp ON : Engine Management System (EMS) fault**	**ECM, TCM, OPU, HCU, MCU, BMS, AAF**
2. Service Lamp	• **Lamp ON : Hybrid related system fault**	**HCU, MCU, BMS, LDC, OPU**
3. READY Lamp	• **After ignition START** – Lamp ON : HEV in normal condition is ready to drive (Engine may or may not start) – Lamp OFF : HEV is not ready to drive • **During driving** – Lamp ON : HEV is ready to drive – Lamp Blinking : HEV in faulty condition (HEV in limited operating mode) – Lamp OFF : HEV is not ready to drive	**HCU**
4. EV MODE Lamp	• **Lamp ON : EV mode (Electric motor only)** • **Lamp OFF : HEV mode (Engine running)**	**HCU**

Components

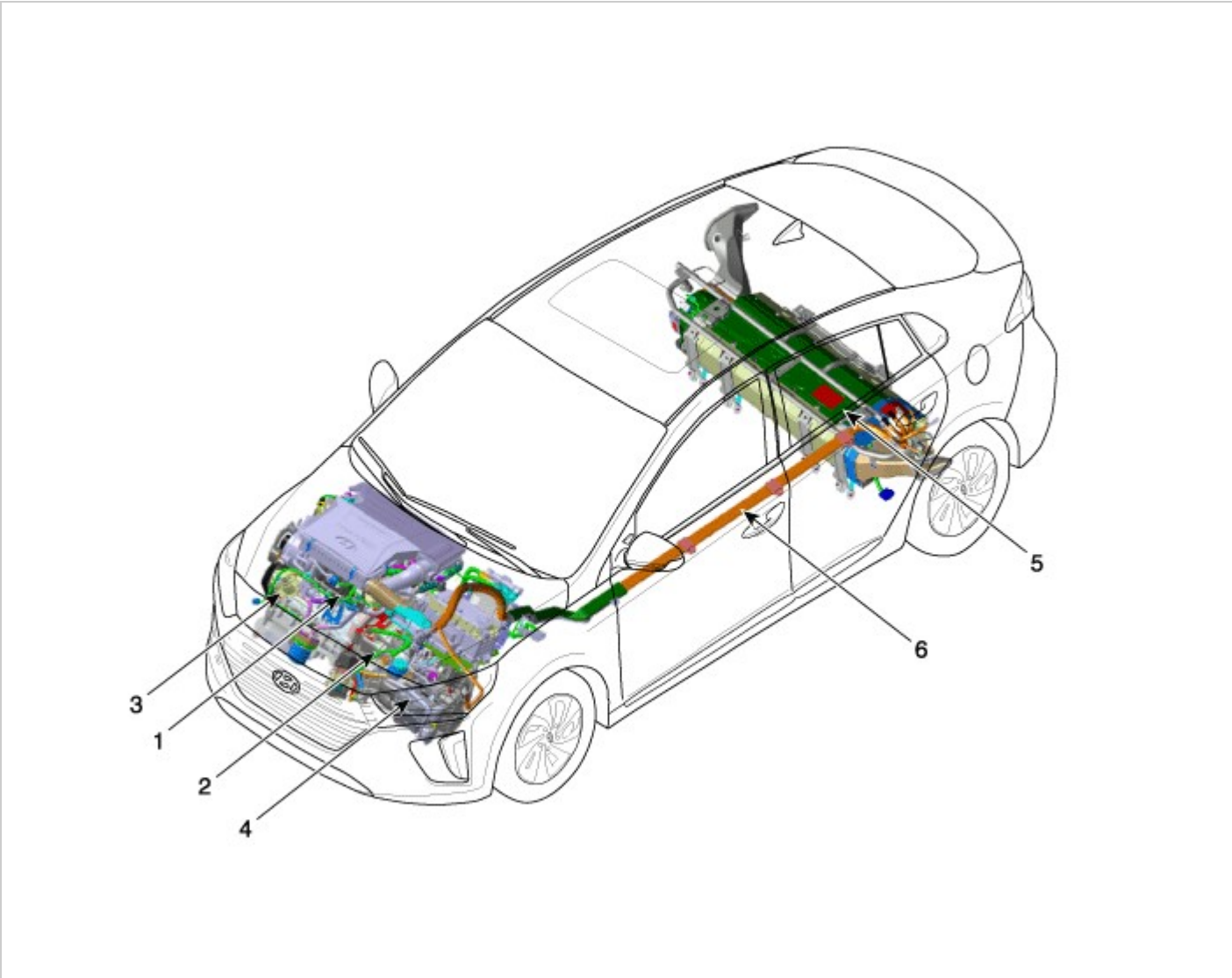

1. Engine
2. Hybrid Drive Motor
3. HSG (Hybrid Starter Generator)
4. Transaxle
5. High Voltage Battery System
6. Power Cable

Specifications

Hybrid Control System

Brake Switch

▷ Type: ON/OFF Switch

▷ Specification

Item		Brake PedalRelease	Brake PedalPush
Switch 1		Max. 0.5V	Battery Voltage
Switch 2	IG OFF	Max. 50mV	
	IG ON	Battery Voltage	Max. 0.5V

Items	Specification
Gap [mm (in)]	1.0 - 2.0 (0.039 - 0.079)

DC Fuse

▷ Specification

Item	Specification
Rated Current (A)	30

High Voltage Battery System

Battery Pack Assembly

▷ Type: LiPB (Lithium ion Polymer Battery), Pouch type

▷ Specification
[General Specification]

Item	Specification	Remarks
Number of Cells	16 Cells × 4 Modules	1 Cells = 3.75 V
Rated Voltage (V)	240	Terminal voltage at Rated 1C discharge, SOC 55%, 20°C (68°F)
Nominal Capacity (Ah)	6.5	[Beginning of life, 20°C (68°F)]
Rated Energy (Wh)	1,560	Rated Voltage × Nominal Capacity

[Operational Specification]

Item	Specification
Discharge Power (kW)	Max. 42
Charge Power (kW)	Max. 39
Operation Voltage (V)	160 - 275 [2.5V ≤ Cell Voltage ≤ 4.3V]
Operation Current (A)	-250 - 250

Power Relay Assembly (PRA)
▷ Specification

Item	Specification
Rated Voltage (V)	450
Rated Current (A)	80

High Voltage Battery Control System

Safety Plug
▷ Specification

Item		Specification
Rated Voltage (V)		400
Rated Current (A)		80
Fuse Rated Current (A)		125
FuseMeltingTime	Rated Current × 110%	Min. 4 hr
	Rated Current × 200%	5 - 100 sec
	Rated Current × 300%	0.5 - 15 sec
	Rated Current × 500%	Max. 1 sec

Main Relay
▷ Specification

Item		Specification
Contact	Rated Voltage (V)	450
	Rated Current (A)	80
Coil	Operating Voltage (V)	12
	Resistance (Ω)	29.7 - 36.3[20°C (68°F)]

Pre-Charge Relay
▷ Specification

Item		Specification
Contact	Rated Voltage (V)	450
	Rated Current (A)	20
Coil	Operating Voltage (V)	12
	Resistance (Ω)	59.4 - 72.6[20°C (68°F)]

Pre-Charge Resistor
▷ Specification

Item	Specification
Resistance (Ω)	40 [20°C (68°F)]
Rated Current (A)	40

Battery Current Sensor
▷ Specification

Current (A)	Output Voltage (V)

-300(Charge)	0.5
0	2.5
+300(Discharge)	4.5

Battery Temperature Sensor (HEV)

▷ Type: Thermisor type

▷ Specification

[Air Inlet]

Temperature		Resistance (kΩ)
°C	°F	
-50	-58	314.9 - 344.6
-40	-40	181.1 - 196.0
-30	-22	107.5 - 115.2
-20	-4	65.82 - 69.77
-10	14	41.43 - 43.52
0	32	26.74 - 27.83
10	50	17.67 - 18.25
20	68	11.94 - 12.24
30	86	8.214 - 8.411
40	104	5.738 - 5.918
50	122	4.082 - 4.239
60	140	2.954 - 3.087
70	158	2.172 - 2.284
80	176	1.621 - 1.715
90	194	1.227 - 1.305
100	212	0.941 - 1.006
110	230	0.731 - 0.785

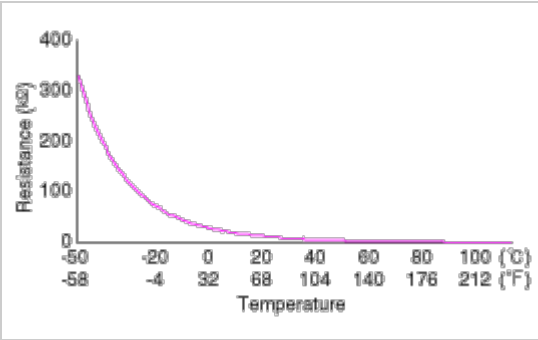

[Cell]

Temperature		Resistance (kΩ)
°C	°F	
-50	-58	351.1 - 385.0
-40	-40	196.6 - 213.1
-30	-22	114.4 - 122.7
-20	-4	68.94 - 73.15
-10	14	42.59 - 44.76
0	32	27.14 - 28.27
10	50	17.78 - 18.36
20	68	11.96 - 12.25
30	86	8.202 - 8.399
40	104	5.721 - 5.901
50	122	4.069 - 4.226
60	140	2.945 - 3.078
70	158	2.169 - 2.280
80	176	1.622 - 1.715
90	194	1.228 - 1.306

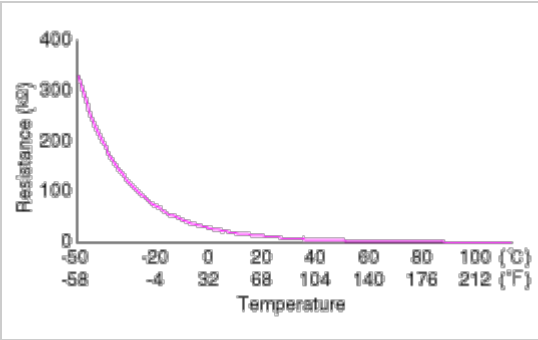

Auxiliary Battery Temperature Sensor

▷ Type: Thermisor type

▷ Specification

Temperature		Resistance (kΩ)
°C	°F	
-20	-4	251.7 - 291.9
0	32	90.1 - 100.2
25	77	29.10 - 30.90
50	122	10.41 - 11.51
80	176	3.56 - 4.11

High Voltage Battery Cooling System

Cooling Fan

▷ Specification

Duty (%)	Fan Speed (rpm)
10	500
20	1000
30	1300
40	1600
50	1900
60	2200
70	2500
80	2800
90(Max.)	3100
95(Max.)	3850

Low Voltage DC/DC Converter (LDC)

▷ Specification

Item	Specification
Input Voltage (V)	200 - 310
Output Voltage (V)	12.8 - 14.7
Rated Power (kW)	1.8
Cooling Method	Water-cooled

Tightening Torques

Hybrid Control System

Item	kgf.m	N.m	lb-ft
HPCU installation bolt	2.0 - 3.0	19.6 - 29.4	14.5 - 21.7

High Voltage Battery System

Item	kgf.m	N.m	lb-ft
High voltage battery pack assembly installation bolt	8.0 - 12.0	78.5 - 117.7	57.9 - 86.8
High voltage battery front cover installation bolt / nut	0.8 - 1.2	7.8 - 11.8	5.8 - 8.7
High voltage battery rear cover installation bolt	0.8 - 1.2	7.8 - 11.8	5.8 - 8.7
High voltage power cable terminal tightening nut	0.8 - 1.2	7.8 - 11.8	5.8 - 8.7
Power relay assembly installation nut	0.8 - 1.2	7.8 - 11.8	5.8 - 8.7

High Voltage Battery Control System

Item	kgf.m	N.m	lb-ft
BMS ECU installation nut	0.8 - 1.2	7.8 - 11.8	5.8 - 8.7

High Voltage Battery Cooling System

Item	kgf.m	N.m	lb-ft
Cooling fan installation nut	0.8 - 1.2	7.8 - 11.8	5.8 - 8.7
Cooling fan bracket installation nut	0.8 - 1.2	7.8 - 11.8	5.8 - 8.7
Inlet cooling duct installation nut	0.8 - 1.2	7.8 - 11.8	5.8 - 8.7
Outlet cooling duct installation nut	0.8 - 1.2	7.8 - 11.8	5.8 - 8.7

Low Voltage DC/DC Converter (LDC)

Item	kgf.m	N.m	lb-ft
LDC ground tightening bolt	1.1 - 1.4	10.8 - 13.7	7.9 - 10.1
LDC power outlet cable tightening bolt	1.1 - 1.4	10.8 - 13.7	7.9 - 10.1

Hybrid Control System

Description

The HCU (Hybrid Control Unit) controls whole hybrid systems and is connected with each control modules (ECM, TCM, MCU, BMS ECU etc.) by CAN interface. In addition this system uses the brake switch and Clutch Pressure Sensor (CPS) signals for controlling the hybrid system.

NOTICE

- CAN interface is divided into hybrid and chassis CAN lines.

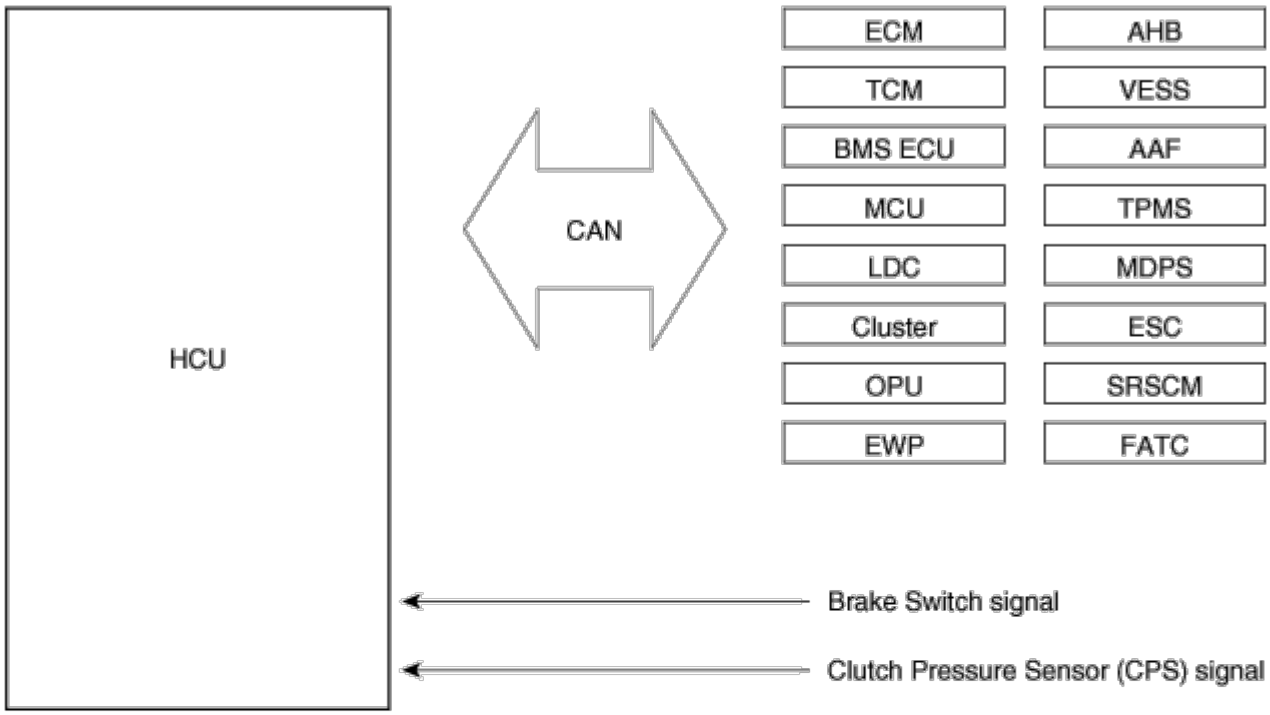

NOTE

- HCU : Hybrid Control Unit
- ECM : Engine Control Module
- TCM : Transaxle Control Module
- BMS ECU : Battery Management System ECU
- MCU : Motor Control Unit
- LDC : Low Voltage DC / DC Converter
- OPU : Oil Pump Unit
- EWP: Electric Water Pump
- VESS : Virtual Engine Sound System (if equipped)
- AAF: Active Air Flap
- AHB: Active Hydraulic Booster
- TPMS: Tire Pressure Monitoring System
- MDPS: Motor Driven Power Steering
- ESC: Electronic Stability Control
- SRSCM: Supplement Restraints System Control Module
- FATC: Full Automatic Temperature Control

The HCU controls power & torque distribution of the engine and motor, regenerative brake, and fail-safe mode based on the vehicle information, driver's demand, engine information and high voltage battery information.

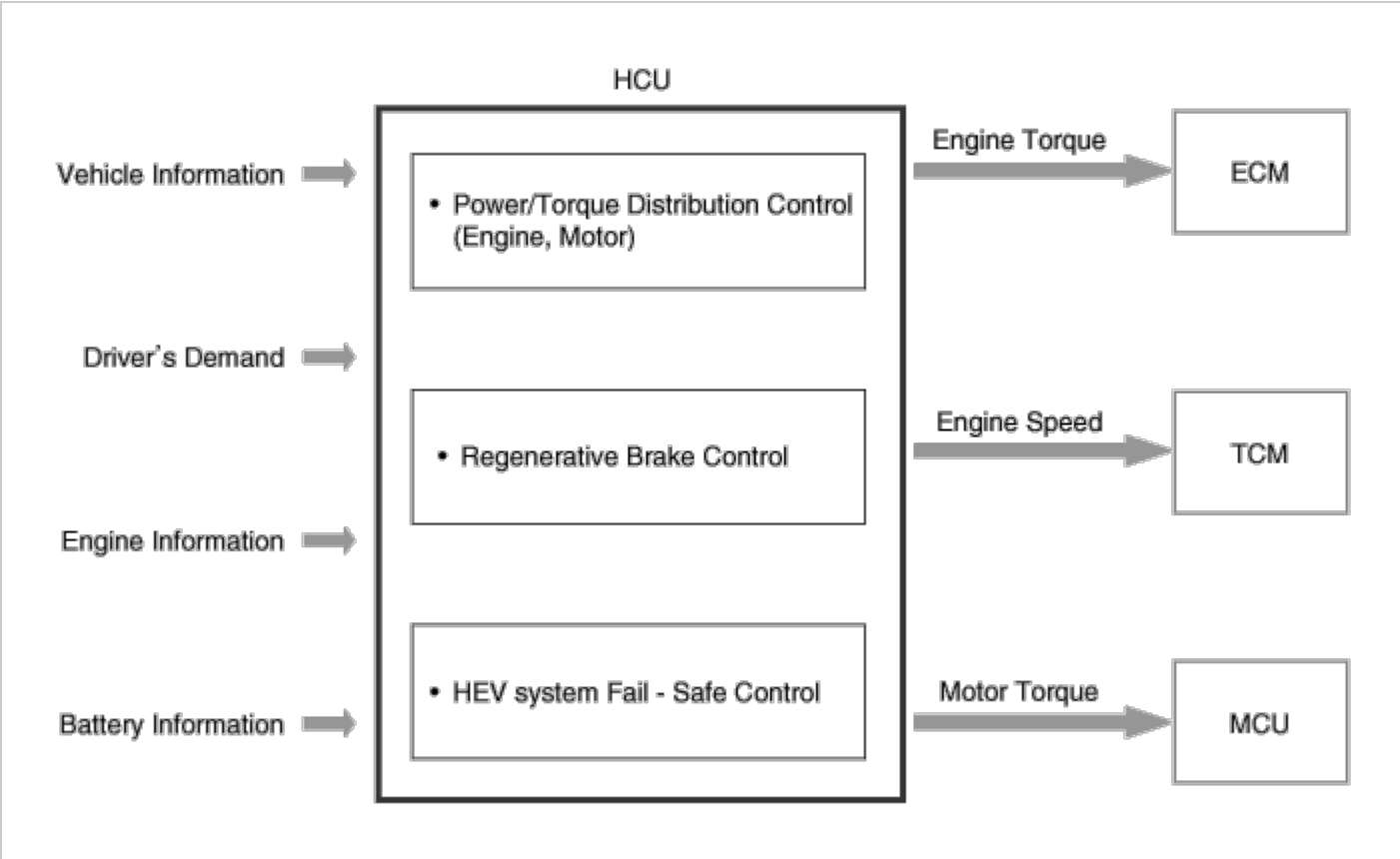

[HCU Main Functionalities]

Item	Functionality
Demand Torque Determination	• Driver Creep Demand Torque Calculation • Driver Acceleration/Deceleration Torque Calculation • Driver Total Demand Torque Calculation
Regeneration Brake Control	• Regeneration Brake Demand Torque Control • Regeneration Brake Estimated Torque Calculation
EV/HEV Mode Determination	• Engine Crank Condition Determination • Engine Target Operating Status Determination
Battery SOC Balancing	• Electric Power Limitation • Charge/Discharge Power Determination • Auxiliary System Power Limitation and Compensation
Engine Operating Point Determination	• Engine Target Speed Determination in Idle Load • Engine Target Torque Determination in Part Load • Engine Target Torque Determination in Full Load • Engine Target Torque Determination in Engine Stop or Passive Run
Idle/Racing Charge Control	• Idle Charge Control • Racing Charge Control
Engine Start/Stop Control	• Crank Method Selection • Speed Control for Cranking Engine • Fuel Injection Control • Engine Stop Control • Engine Firing Complete Determination
Engine Clutch Engage/Slip/Release Control	• Synch Engage Control • Launch Engage Control • Engine Brake Engage Control • Engage in Shift • Release Control
Torque Coordination Control	• Engine Torque Determination in Transient State • Motor Torque Determination in Transient State • Generator Torque Determination in Transient State
Torque Invention Control	• Torque Increase/Decrease Determination
Anti-Shock Control	• Parabolic Torque Restriction • Shift Assist Control • Engine Clutch Slip Control • Anti-jerk Control
System Limit Control	• Battery Charge/Discharge Limit Control

	• Engine, Hybrid Drive Motor, HSG Torque Limit Control
Torque Monitoring	• Hybrid powertrain torque monitoring
Fail-Safe	• Hybrid control system fail-safe control
Auxiliary System Control	• Electric Oil Pump Control • Variable Voltage Control of Low Voltage DC/DC • A/C & Heater Control • Brake Boost Control • Cluster Display

Specifications

Brake Switch

▷ Type: ON/OFF Switch

▷ Specification

Item		Brake PedalRelease	Brake PedalPush
Switch 1		Max. 0.5V	Battery Voltage
Switch 2	IG OFF	Max. 50mV	
	IG ON	Battery Voltage	Max. 0.5V

Items	Specification
Gap [mm (in)]	1.0 - 2.0 (0.039 - 0.079)

DC Fuse

▷ Specification

Item	Specification
Rated Current (A)	30

Component Location

1. HPCU(Hybrid Power Control Unit)
2. HCU(Hybrid Control Unit)
3. Brake Switch
4. DC Fuse

NOTICE

- HPCU includes the HCU (Hybrid Control Unit), Inverters (for Drive Motor, HSG and Electric A/C Compressor), MCU (Motor Control Unit) and LDC (Low DC / DC Converter).

NOTICE

- For the location of the other control modules, refer to the relevant group.

1. HPCU(Hybrid Power Control Unit) 2. HCU(Hybrid Control Unit)	3. Brake Switch

	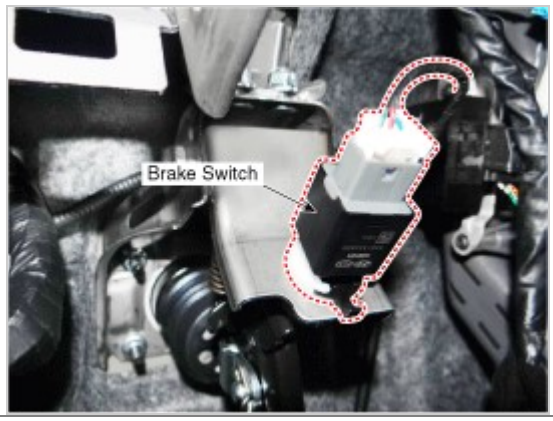
4. DC Fuse	

Hybrid Control System

Description

The Hybrid Power Control Unit (HPCU) is an integrated power conversion unit which consists of the two inverters, LDC, and HCU.

Hybrid Control System

Components

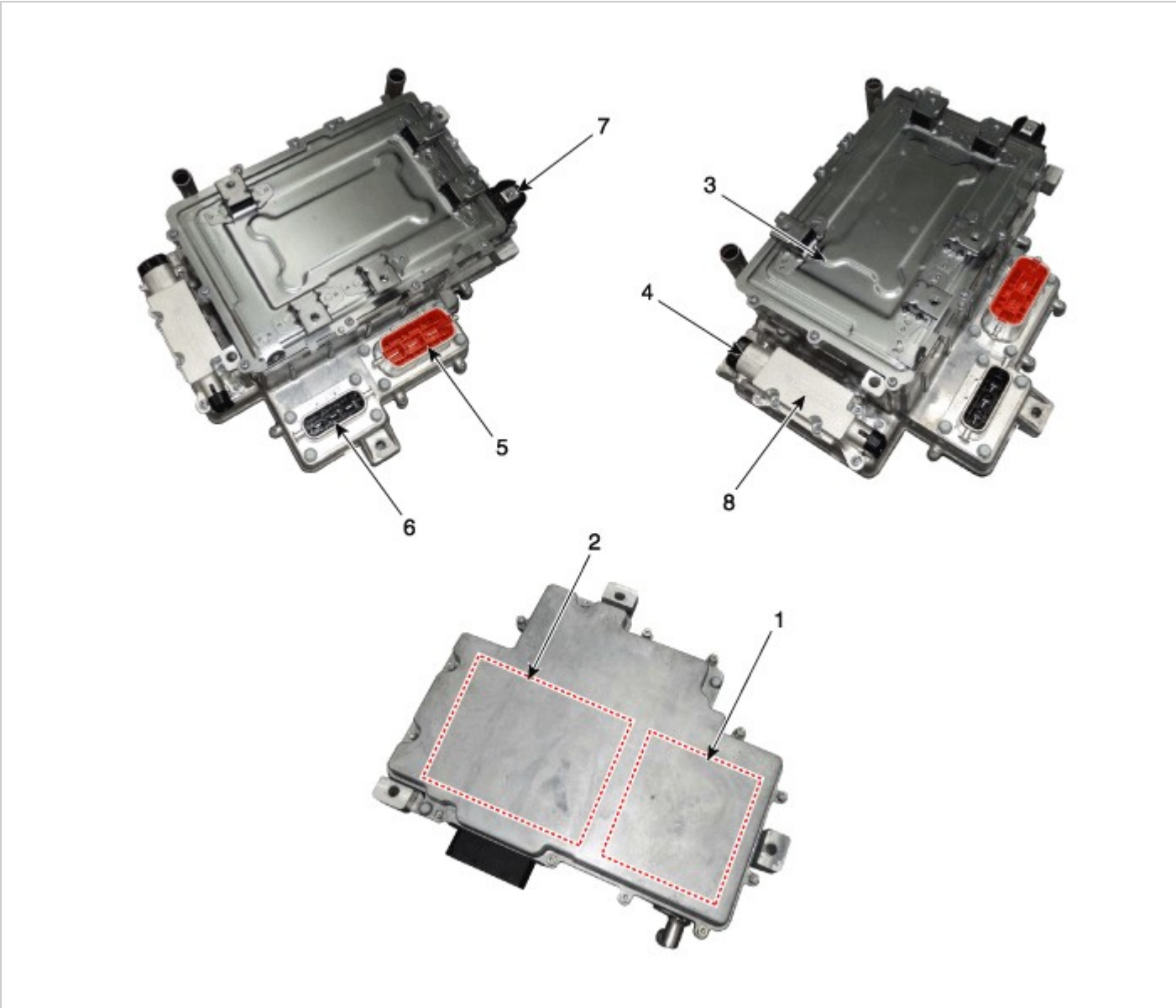

1. Hybrid Control Unit(HCU)
2. Inverter
3. Low DC/DC Converter (LDC)
4. Connector (↔ High Voltage Battery)
5. Connector (↔ Motor)
6. Connector (↔ HSG)
7. Low Voltage Power Outlet Terminal
8. DC Fuse

Removal

WARNING

- Be sure to read and follow the “General Safety Information and Caution” before doing any work related with the high voltage system. Failure to follow the safety instructions may result in serious electrical injuries.
- Be sure to shut off the high voltage before doing any work related with the high voltage system(Refer to "High Voltage Shut-off Procedure"). Failure to follow the safety instructions may result in serious electrical injuries.

Hybrid Power Control Unit (HPCU)

1. Shut off the high voltage circuit.
   (Refer to Hybrid Control System - “High Voltage Shutoff Procedure”)
2. Remove the air cleaner assembly and air duct.
   (Refer to Engine Mechanical System - "Air Cleaner")
3. Remove the ECM & TCM bracket assembly.
   (Refer to Engine Control/Fuel System - "Engine Control Module")
4. Drain the coolant of hybrid motor cooling system.
   (Refer to Hybrid Motor Cooling System - "Coolant")
5. Remove the HPCU protector (A) after loosening the mounting bolts.

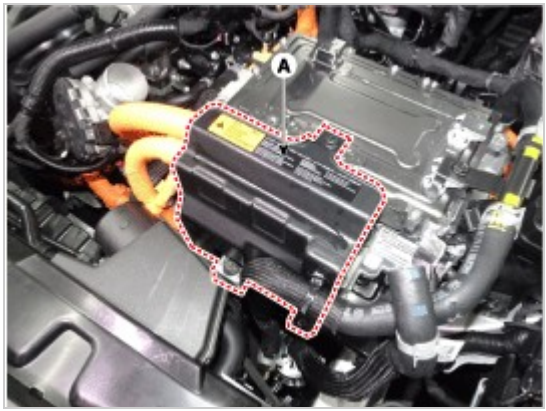

6. Disconnect the motor power cable connector (A) and HSG power cable conector (B).

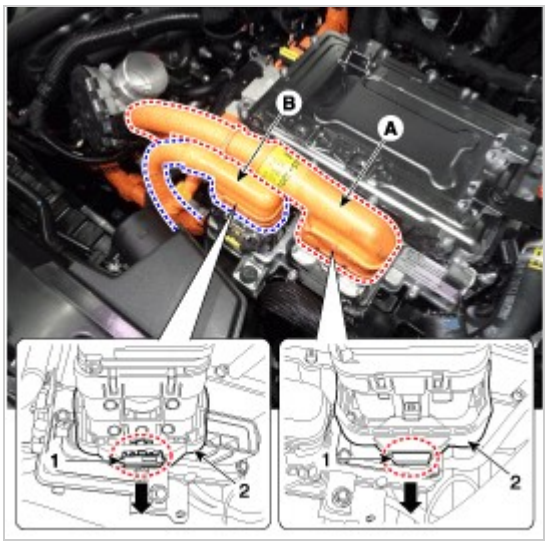

7. Disconnect the power cable (A) [↔ High voltage battery system assembly] and power cable (B) [↔ HSG & Electric A/C compressor].

Information

- Remove the inverter power cale in the follwing order.

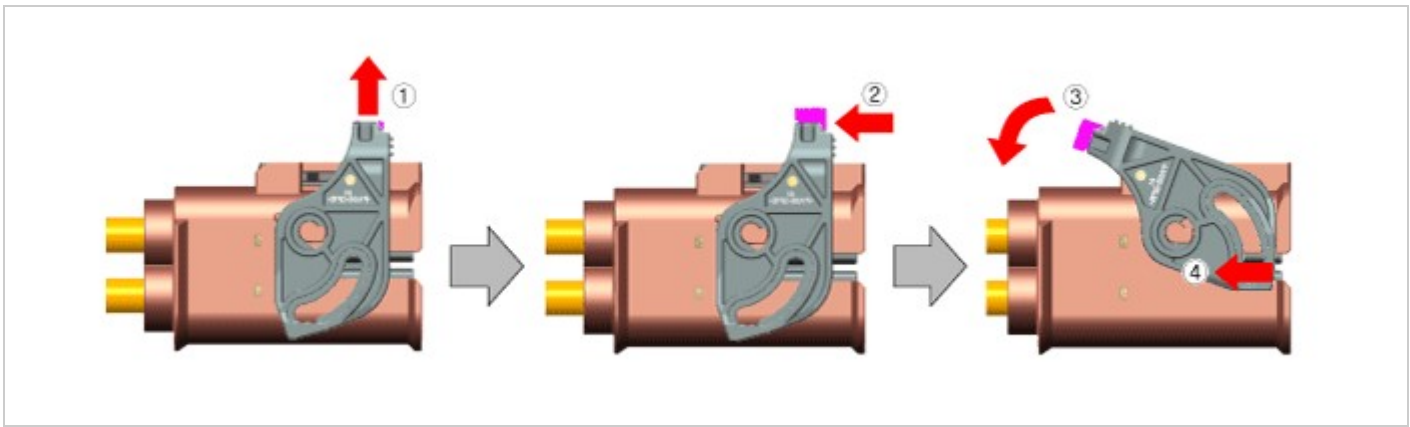

8. Disconnect the HCU & inverter (MCU) connector (A).

9. Disconnect the coolant outlet hose & pipe (A) after loosening the mounting bolt.

10. Disconnect the LDC power output cable (A) and LDC ground (-) cable (C) after loosening the mounting bolt and nut.

11. Remove the HPCU (A) after loosening the mounting bolts.

Installation

WARNING

- Be sure to read and follow the “General Safety Information and Caution” before doing any work related with the high voltage system. Failure to follow the safety instructions may result in serious electrical injuries.

1. Install the HPCU in the reverse order of removal.

HPCU installation bolt:19.6 - 29.4 N.m (2.0 - 3.0 kgf.m, 14.5 - 21.7 lb-ft)
LDC power otulet cable installation bolt:3.9 - 5.9 N.m (0.4 - 0.6 kgf.m, 2.9 - 4.3 lb-ft)
LDC ground cable installation bolt:3.9 - 5.9 N.m (0.4 - 0.6 kgf.m, 2.9 - 4.3 lb-ft)

2. Refill the hybrid motor cooling system coolant and perform air bleeding by using the GDS. (refer to Hybrid Motor Cooling System - "Coolant").

> **NOTICE**
> - Perform HCU Variant Coding and Engine Clutch / Motor Resolver learning after replacing the HPCU.

HCU Variant Coding

1. Turn the ignition switch OFF.
2. Connect the KDS / GDS to Data Link Connector (DLC).
   Turn the ignition switch ON.
3. Select "Vehicle, Model year, Engine, System".
4. Select "Vehicle S/W Management".
5. Select "HCU Variant Coding".

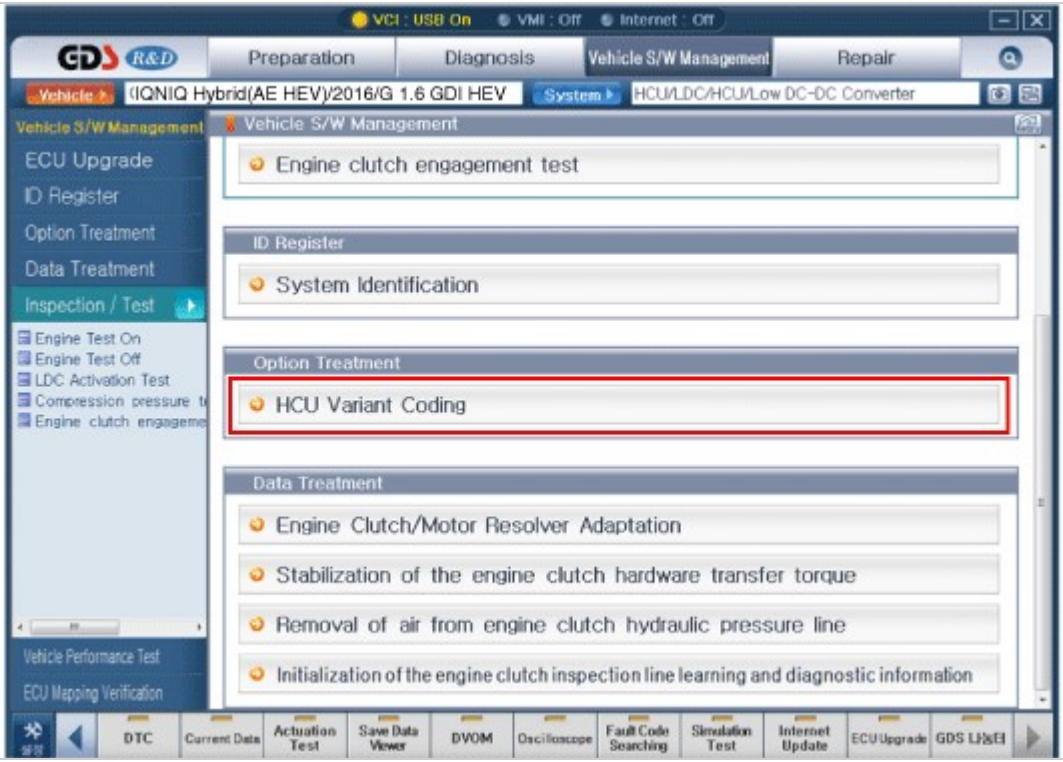

Engine clutch/motor resolver adaptation.

1. Turn the ignition switch OFF.
2. Connect the KDS / GDS to Data Link Connector (DLC).
   Turn the ignition switch ON.
3. Select "Vehicle, Model year, Engine, System".
4. Select "Vehicle S/W Management".
5. Select "Engine clutch/motor resolver adaptation.".

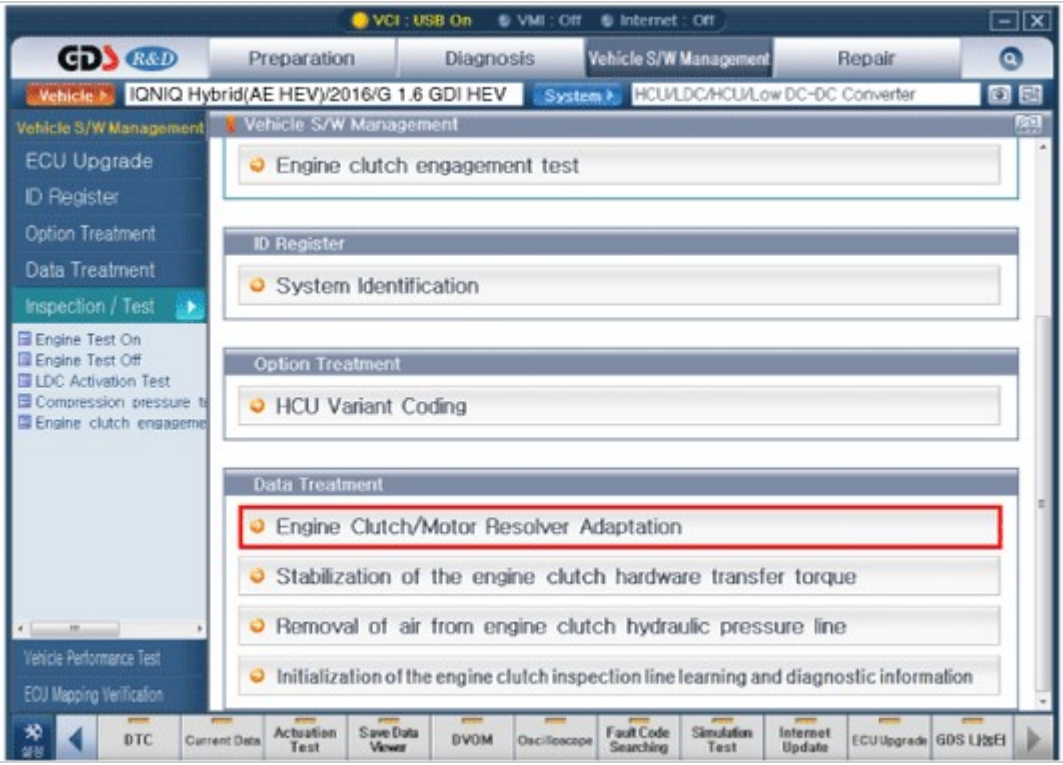

Hybrid Control System

HCU Terminal And Input/Output Signal

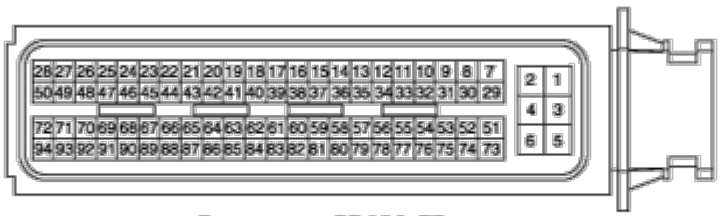

Connector [C133-S]

Terminal Function

Connector [C133-S]

Pin No.	Description	Connected to
1	HCU ground	Chassis ground
2	HCU ground	Chassis ground
3	HCU ground	Chassis ground
4	Battery power (B+)	Battery
5	Battery power (B+)	Battery
6	Battery power (B+)	Battery
7	-	
8	-	
9	-	
10	-	
11	-	
12	-	
13	-	
14	-	
15	Brake Switch 2 signal input	Brake Switch (NC, IG1)
16	Brake Switch 1 signal input	Brake Switch (NO, B+)
17	-	
18	-	
19	-	
20	-	
21	-	
22	-	

23	-	
24	-	
25	-	
26	-	
27	-	
28	-	
29	-	
30	-	
31	-	
32	-	
33	-	
34	-	
35	-	
36	-	
37	-	
38	Start signal input	Smart Key Unit
39	-	
40	-	
41	-	
42	-	
43	-	
44	-	
45	-	
46	-	
47	-	
48	-	
49	-	
50	-	
51	-	
52	-	
53	-	
54	-	
55	-	
56	-	
57	-	
58	-	
59	-	
60	-	
61	-	
62	-	
63	-	
64	-	
65	-	
66	-	
67	-	
68	-	
69	-	
70	-	
71	-	
72	-	
73	IGN signal input	Smart Key Unit
74	-	
75	-	
76	-	
77	-	
78	Powertrain CAN [High] signal input	Other control modules
79	Powertrain CAN [Low] signal input	Other control modules
80	-	
81	Hybrid CAN [High] signal input	Other control modules
82	Hybrid CAN [Low] signal input	Other control modules

83	-	
84	-	
85	-	
86	-	
87	-	
88	-	
89	-	
90	-	
91	-	
92	-	
93	-	
94	-	

Input/Output signal

Connector [C133-S]

Pin no.	Description	Condition	Type	Level
1	HCU ground	Always	DC Voltage	Max. 50mV
2	HCU ground	Always	DC Voltage	Max. 50mV
3	HCU ground	Always	DC Voltage	Max. 50mV
4	Battery power (B+)	Always	DC Voltage	Battery Voltage
5	Battery power (B+)	Always	DC Voltage	Battery Voltage
6	Battery power (B+)	Always	DC Voltage	Battery Voltage
7	-			
8	-			
9	-			
10	-			
11	-			
12	-			
13	-			
14	-			
15	Brake Switch 2 signal input	IG ON	DC Voltage	Battery Voltage
16	Brake Switch 1 signal input	Always	DC Voltage	Battery Voltage
17	-			
18	-			
19	-			
20	-			
21	-			
22	-			
23	-			
24	-			
25	-			
26	-			
27	-			
28	-			
29	-			
30	-			
31	-			
32	-			
33	-			
34	-			
35	-			
36	-			
37	-			
38	Start signal input	IG ST	DC Voltage	Battery Voltage
39	-			
40	-			
41	-			
42	-			
43	-			

44	-			
45	-			
46	-			
47	-			
48	-			
49	-			
50	-			
51	-			
52	-			
53	-			
54	-			
55	-			
56	-			
57	-			
58	-			
59	-			
60	-			
61	-			
62	-			
63	-			
64	-			
65	-			
66	-			
67	-			
68	-			
69	-			
70	-			
71	-			
72	-			
73	IGN signal input	IG ON	DC Voltage	Battery Voltage
74	-			
75	-			
76	-			
77	-			
78	Powertrain CAN [High] signal input	IG ON	Pulse	Dominant:2.75 - 4.5(3.5)V Receive:2.0 - 3.0(2.5)V
79	Powertrain CAN [Low] signal input	IG ON	Pulse	Receive:2.0 - 3.0(2.5)V Dominant:0.5 - 2.25(1.5)V
80	-			
81	Hybrid CAN [High] signal input	IG ON	Pulse	Dominant:2.75 - 4.5(3.5)V Receive:2.0 - 3.0(2.5)V
82	Hybrid CAN [Low] signal input	IG ON	Pulse	Receive:2.0 - 3.0(2.5)V Dominant:0.5 - 2.25(1.5)V
83	-			
84	-			
85	-			
86	-			
87	-			
88	-			
89	-			
90	-			
91	-			
92	-			
93	-			
94	-			

Circuit Diagram

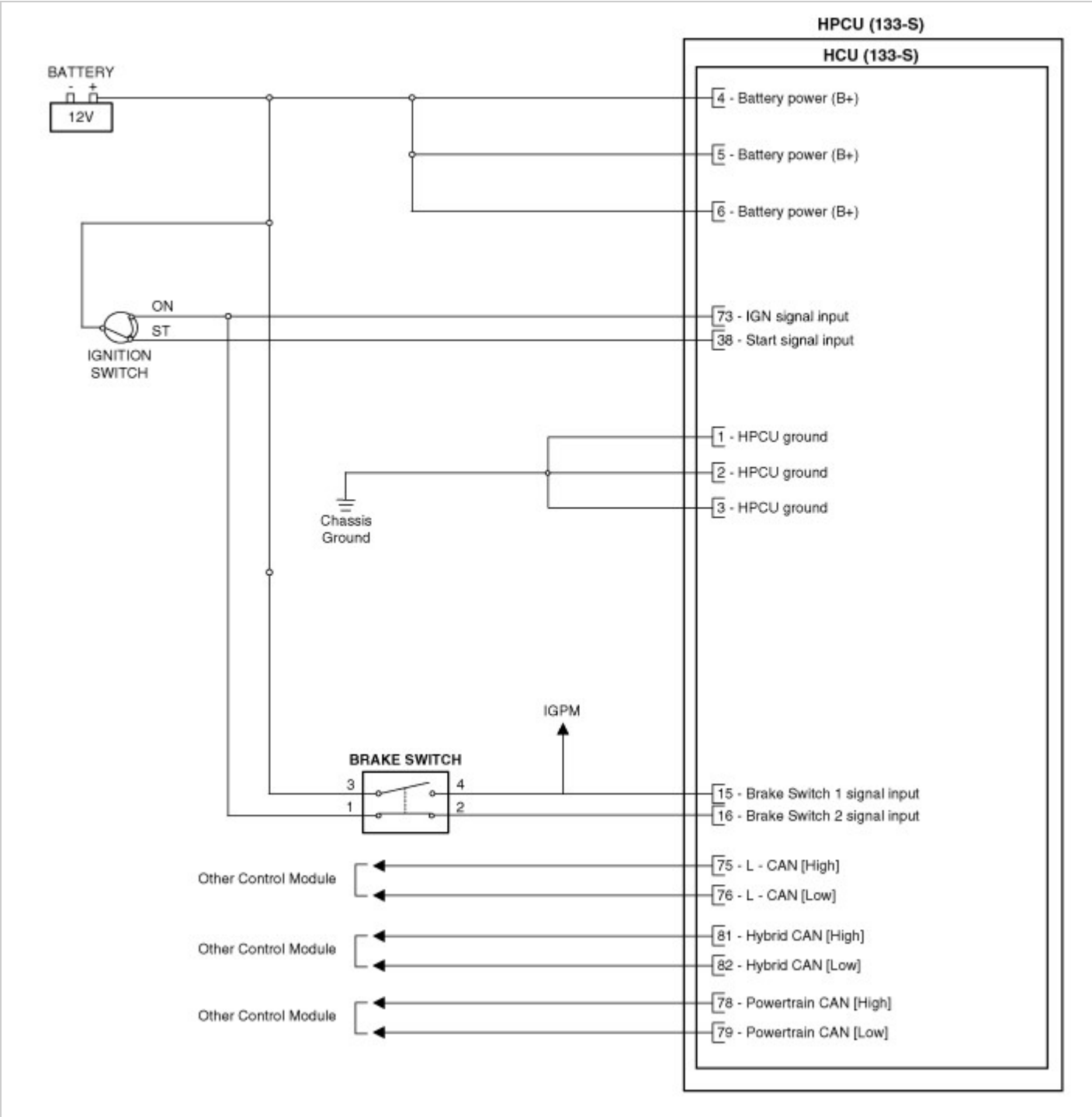

Hybrid Control System

Removal

WARNING

- Be sure to read and follow the “General Safety Information and Caution” before doing any work related with the high voltage system. Failure to follow the safety instructions may result in serious electrical injuries.

1. Refer to “HPCU”.

NOTICE

- The HCU is integrated into the HPCU that can’t be disassembled. So refer to “HPCU” for the removal or installation procedure of the HCU.

Installation

WARNING

- Be sure to read and follow the “General Safety Information and Caution” before doing any work related with the high voltage system. Failure to follow the safety instructions may result in serious electrical injuries.

1. Refer to “HPCU”.

NOTICE

- The HCU is integrated into the HPCU that can't be disassembled. So refer to "HPCU" for the removal or installation procedure of the HCU.

2. Perform the clutch pressure sensor calibration (Refer to "Clutch Pressure Sensor").

Hybrid Control System

Description

The Brake Switch is installed on the brake pedal and linked with the HCU and stop lamp. It sensors the status of the brake pedal (Release, Push) and transmits the signal to the HCU.

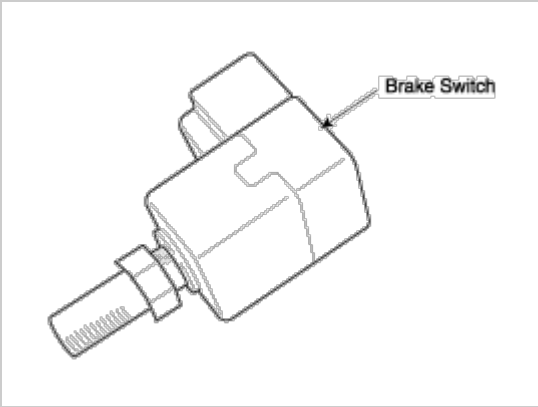

Hybrid Control System

Specification

Item		Brake PedalRelease	Brake PedalPush
Switch 1		Max. 0.5V	Battery Voltage
Switch 2	IG OFF	Max. 50mV	
	IG ON	Battery Voltage	Max. 0.5V

Items	Specification
Gap [mm (in)]	1.0 - 2.0 (0.039 - 0.079)

Hybrid Control System

Circuit Diagram

[Circuit Diagram]

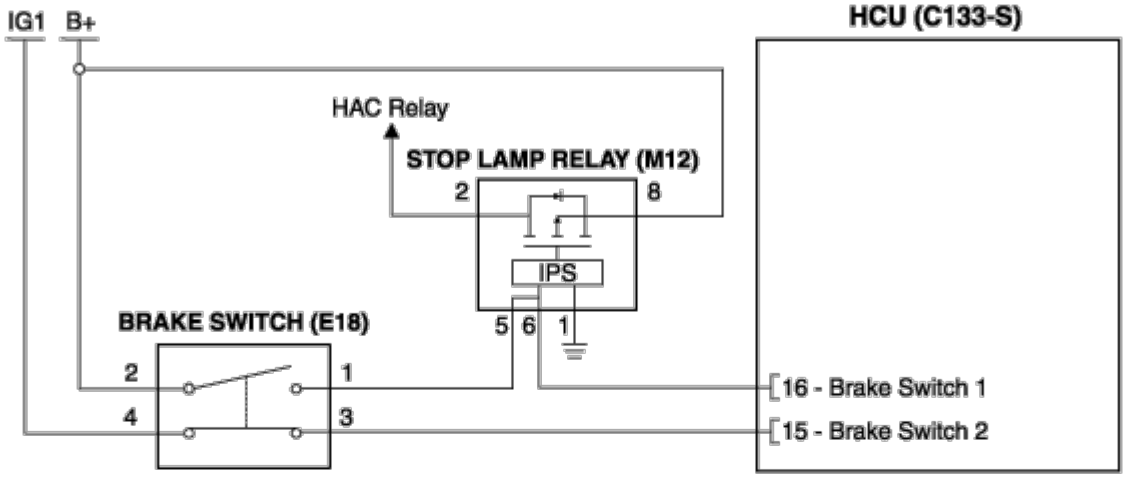

[Connection Information]

Terminal	Connected to	Function
1	Ignition Switch	Battery power (B+)
2	HCU C133-S (15)	Brale Switch 2 signal
3	Battery	Battery power (B+)
4	Stop Lamp Relay	Brale Switch 1 signal

[Harness Connector]

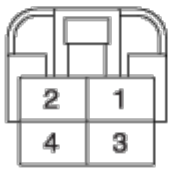

E25
BRAKE SWITCH

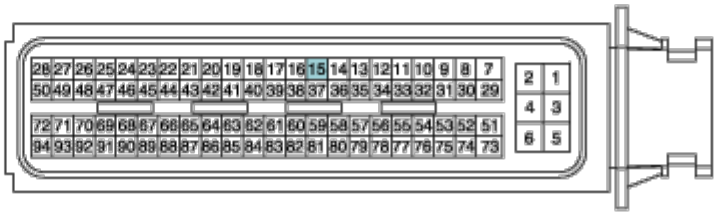

C133-S
HCU

Hybrid Control System

Removal

1. Refer to Brake System - "Brake System".

Installation

1. Refer to Brake System - "Brake System".

Inspection

1. Refer to Brake System - "Brake System".

Adjustment

1. Refer to Brake System - "Brake System".

Hybrid Control System

Specification

Item	Specification
Rated Current (A)	30

Hybrid Control System

Component Location

[Circuit Diagram]

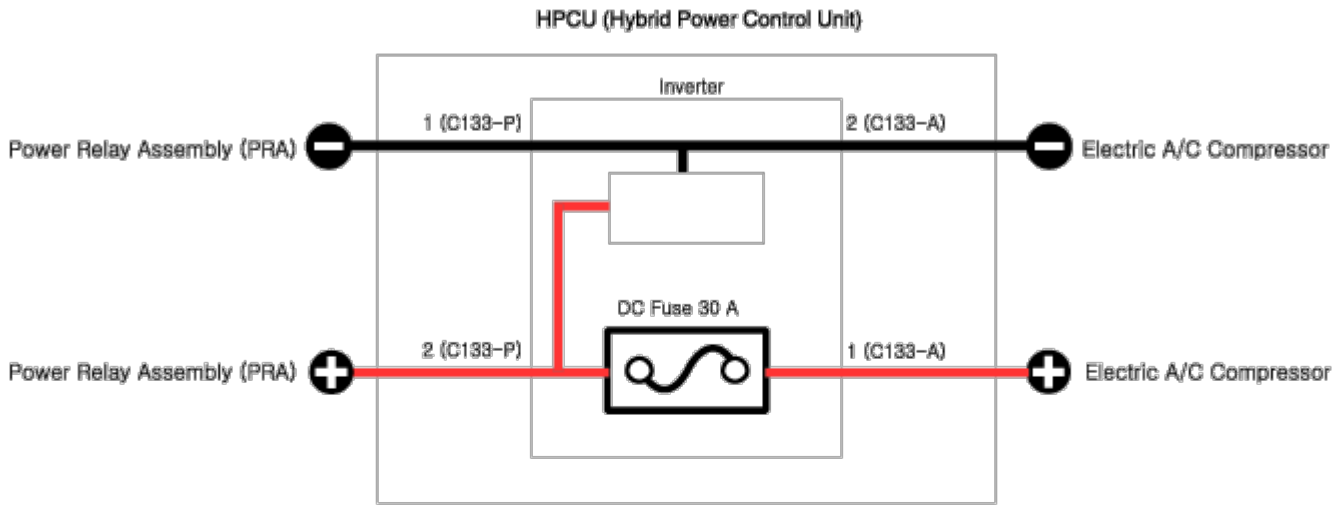

[Harness Connector]

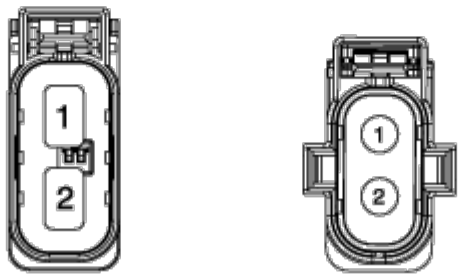

C133-P
Inverter

C133-A
Inverter

Component Location

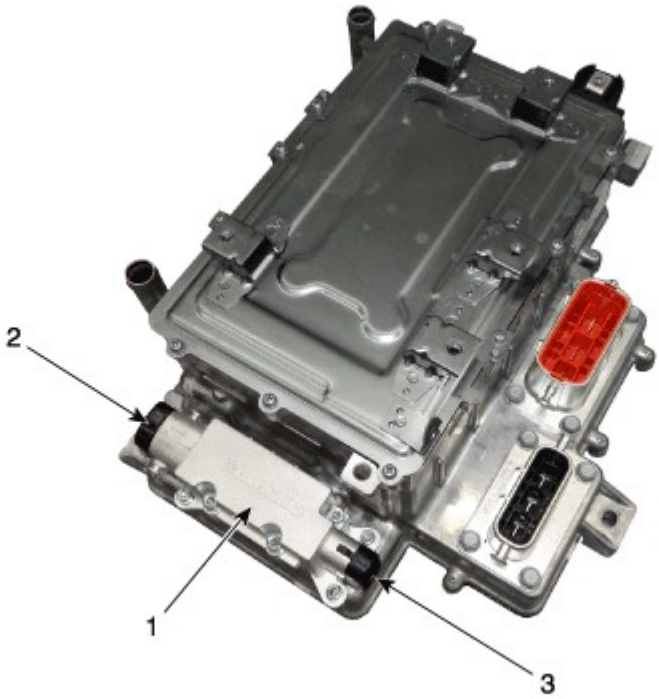

1. DC Fuse
2. Inverter Connector [↔ Power Relay Assembly (PRA)]
3. Inverter Connector [↔ Electric A/C compressor]

Hybrid Control System

Removal

WARNING

- Be sure to read and follow the “General Safety Information and Caution” before doing any work related with the high voltage system. Failure to follow the safety instructions may result in serious electrical injuries.

1. Shut off the High Voltage circuit
   (Refer to “High Voltage Shut-off Procedures”).
2. Remove the air cleaner assembly and duct.
   (Refer to Engine Mechanical System - “Air Cleaner”).
3. Disconnect the power cable (A) [↔ High voltage battery system assembly] and inverter power cable (B) [↔ HSG & Electric A/C compressor].

Information

- Remove the inverter power cale in the follwing order.

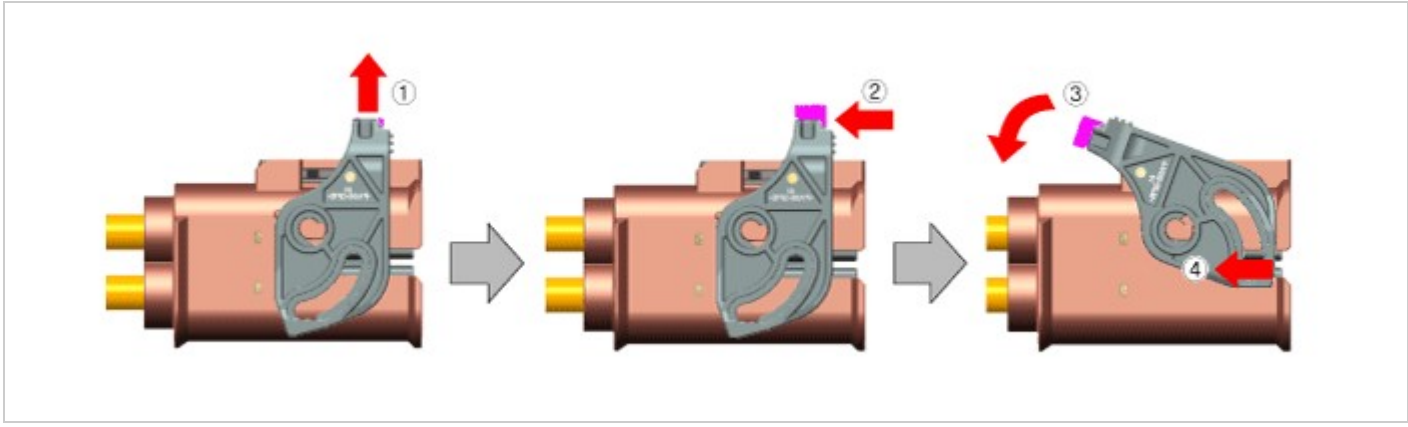

4. Remove the DC fuse cover (A) after loosening the mounting bolt.

   DC fuse cover installation bolt:
   4.9 - 6.9 N.m (0.5 - 0.7 kgf.m, 3.6 - 5.1 lb-ft)

5. Remove the DC fuse seal cover (A).

6. Remove the DC fuse (A) from the HPCU after loosening the mounting bolt.

   DC fuse installation bolt:
   9.3 - 10.4 N.m (0.95 - 1.06 kgf.m, 6.9 - 7.7 lb-ft)

Installation

⚠ WARNING

- Be sure to read and follow the “General Safety Information and Caution” before doing any work related with the high voltage system. Failure to follow the safety instructions may result in serious electrical injuries.

1. Install the DC fuse in the reverse order of removal.

Hybrid Control System

Description

The High Voltage Battery System provides the hybrid drive motor, HSG, and electric A/C compressor with electric energy and also reserves the electric energy generated during regeneration braking.It consists of the battery pack assembly, BMS ECU, power relay assembly, case, control wiring, cooling fan, and cooling ducts.

This battery is a Lithium ion Polymer Battery (LiPB) and has 64 cells (16 Cells × 4 Modules). The voltage of each cell is 3.75V DC, so the rated voltage of this battery pack is 240V DC.

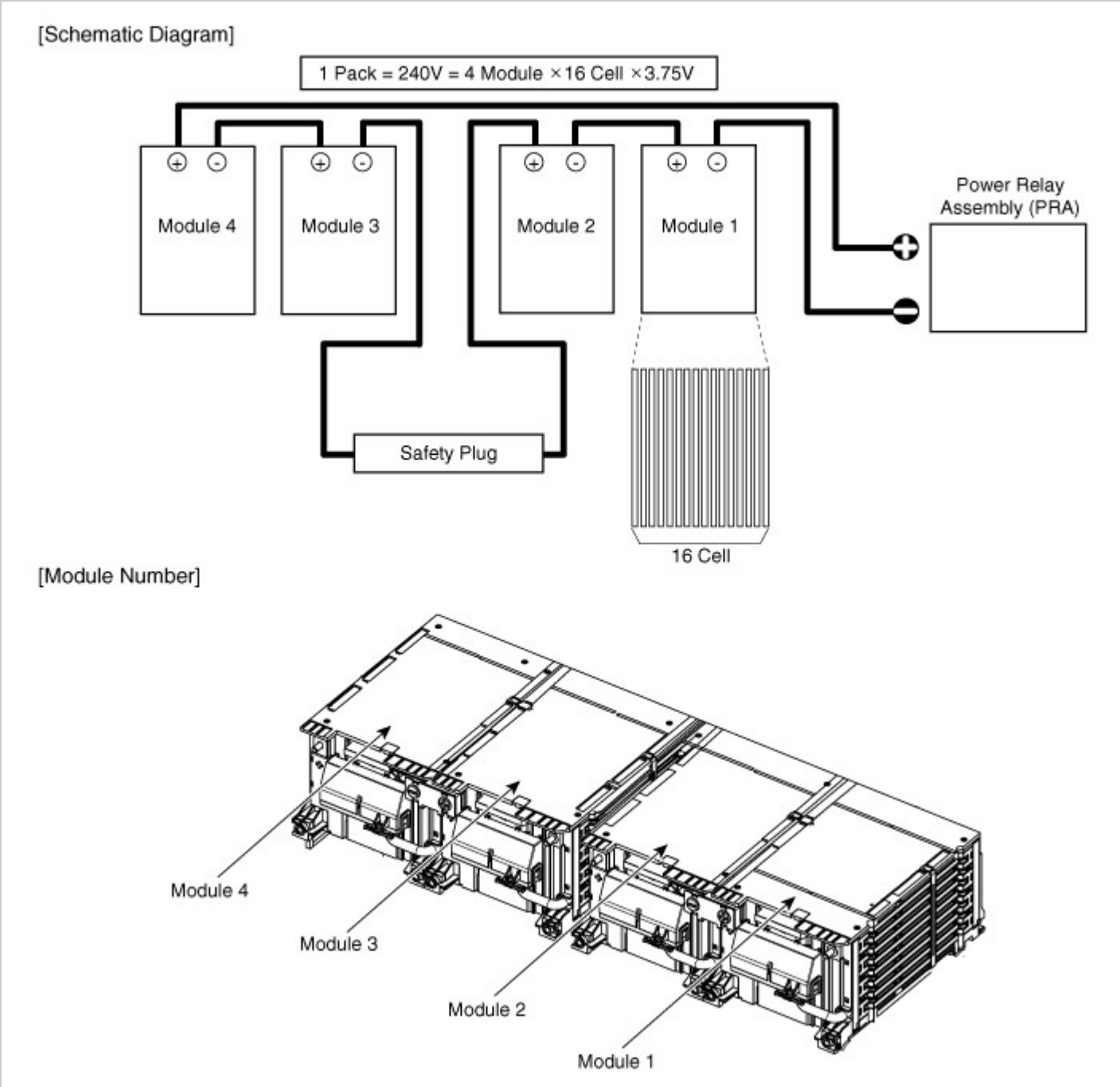

Hybrid Control System

Specification

Battery Pack Assembly

▷ Type: LiPB (Lithium ion Polymer Battery), Pouch type

▷ Specification

[General Specification]

Item	Specification	Remarks
Number of Cells	16 Cells × 4 Modules	1 Cells = 3.75 V
Rated Voltage (V)	240	Terminal voltage at Rated 1C discharge, SOC 55%, 20°C (68°F)
Nominal Capacity (Ah)	6.5	[Beginning of life, 20°C (68°F)]
Rated Energy (Wh)	1,560	Rated Voltage × Nominal Capacity

[Operational Specification]

Item	Specification
Discharge Power (kW)	Max. 42
Charge Power (kW)	Max. 39
Operation Voltage (V)	160 - 275 [2.5V ≤ Cell Voltage ≤ 4.3V]
Operation Current (A)	-250 - 250

Power Relay Assembly (PRA)

▷ Specification

Item	Specification
Rated Voltage (V)	450
Rated Current (A)	80

Components

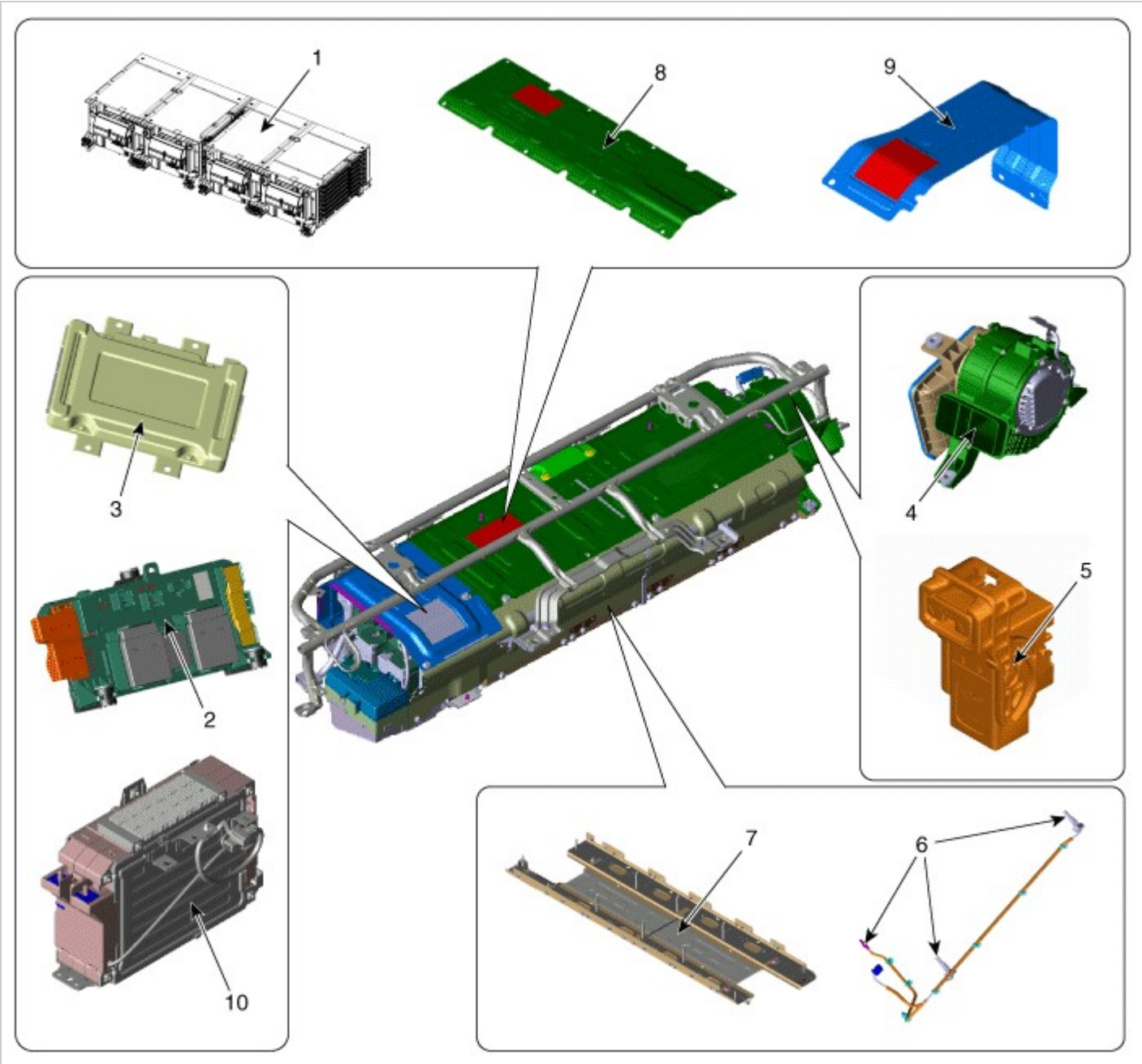

1. High Voltage Battery Module
2. Power Relay Assembly (PRA)
3. BMS
4. Cooling Fan
5. Safeety Plug
6. Battery Temperature Sensor
7. High Voltage Battery Plate
8. High Voltage Battery Front Cover
9. High Voltage Battery Rear Cover
10. Auxiliary 12V Battery

Removal

WARNING

- Be sure to read and follow the “General Safety Information and Caution” before doing any work related with the high voltage system. Failure to follow the safety instructions may result in serious electrical injuries.

1. Shut off the high voltage.
   (Refer to "High voltage Shut-off Procedures")
2. Remove the rear seat cushion.
   (Refer to Body - "Rear Seat Assembly")
3. Remove the rear door scuff trim.
   (Refer to Body - "Door Scuff Trim")
4. Remove the upper frame (A) after loosening the mounting bolts and nuts.

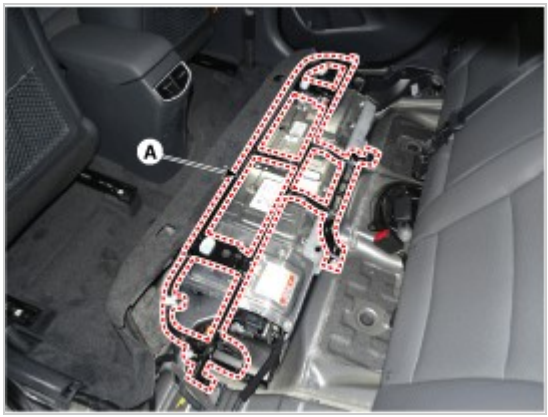

5. Remove the high voltage battery rear cover (A) after loosening the mounting bolts and nuts.

6. Remove the inlet cooling duct.
   (Refer to Hybrid Control System - "Cooling Duct")
7. Remove the high voltage power cable (+) terminal (A) and (-) terminal (B) after loosening the mounting bolts.

8. Disconnect the inverter power connector [+] (A), inverter power connector [-] (B) and battery current sensor connector (C).
9. Disconnect the PRA connector (D).

10. Remove the installation bolt (A) and nut (B), then remove the power relay assembly.

11. Remove the installation bolts and nut, then remove the high voltage battery front cover (A).

12. Disconnect the BMS connector (A).
13. Remove the installation nut (B), then remove the BMS.

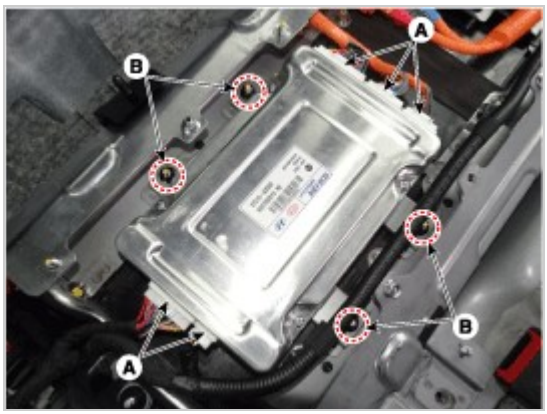

14. Remove the outlet cooling duct.
    (Refer to Hybrid Control System - "Cooling Duct")
15. Disconnect the cooling fan connector (A).
16. Remove the installation nut (B), then remove the safety plug cable.

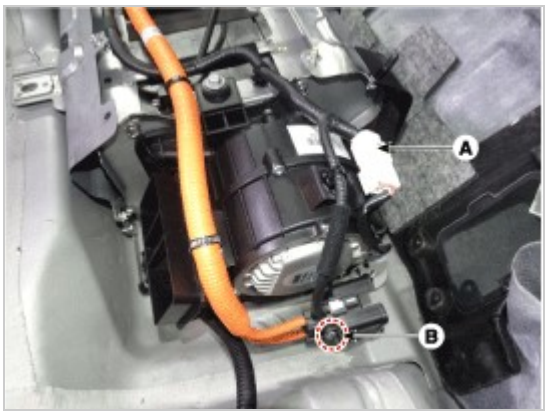

17. Remove the installation bolts and nut (A), then remove the cooling fan.

18. Remove the installation bolts,then remove the high voltage battery pack (A).

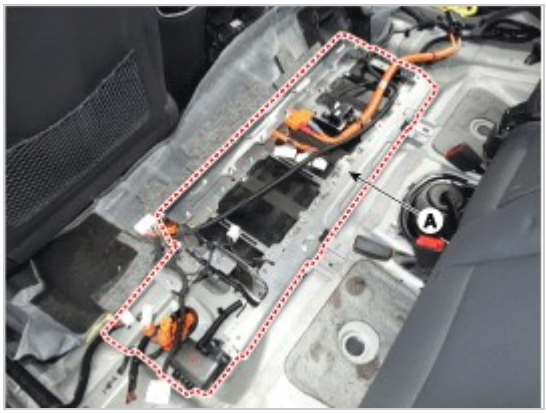

Installation

WARNING

- Be sure to read and follow the “General Safety Information and Caution” before doing any work related with the high voltage system. Failure to follow the safety instructions may result in serious electrical injuries.

1. Install the high voltage battery pack in the reverse order of removal.

BMS installation nut:7.8 - 11.8N.m (0.8 - 1.2kgf.m, 5.8 - 8.7lb-ft)
PRA installation nut:7.8 - 11.8N.m (0.8 - 1.2kgf.m, 5.8 - 8.7lb-ft)
Inverter power cable terminal tightening nut:7.8 - 11.8N.m (0.8 - 1.2kgf.m, 5.8 - 8.7lb-ft)
High voltage battery pack assembly installation bolt:78.4 - 117.7N.m (8.0 - 12.0 kgf.m, 57.9 - 86.8lb-ft)

Disassembly

WARNING

- This hybrid system uses a DC 270V voltage system. Be sure to follow safety instructions below. Failure to follow safety instructions may result in serious injury or electrocution (Refer to "Safety Precaution").

1. Remove the BMS ECU, power relay assembly, cooling fan extension wiring (A).
2. Remove the installation bolt, then remove the safety plug cable (B).

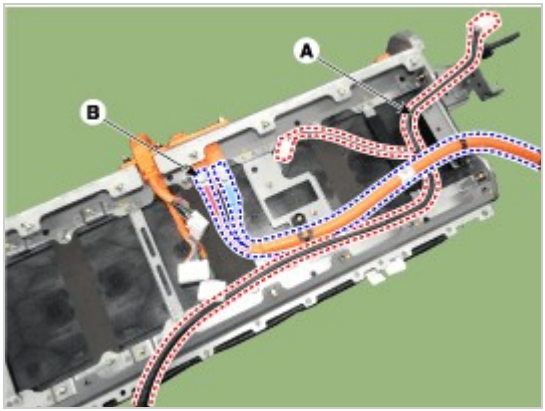

3. Remove the installation nut, then remove the battery pack assembly front cover (A).

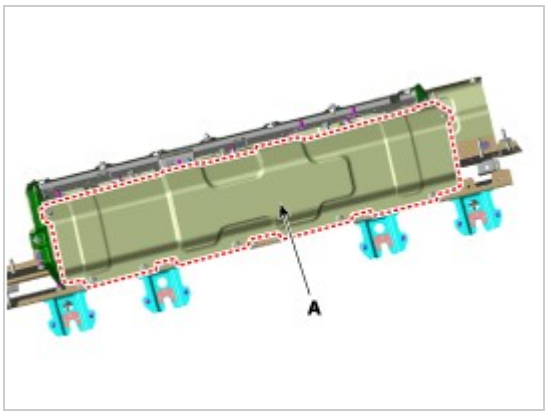

4. Remove the installation nut, then remove the battery pack assembly rear cover (A).

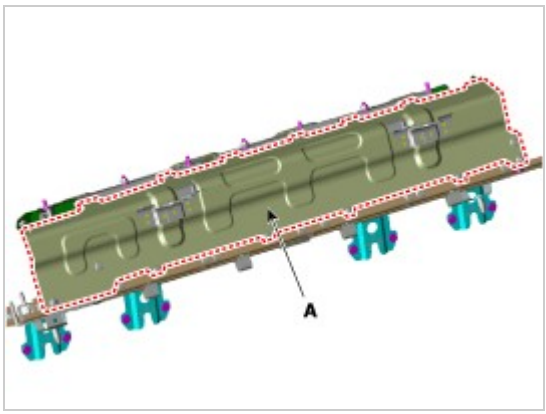

5. Remove the battery temperature sensor (A).

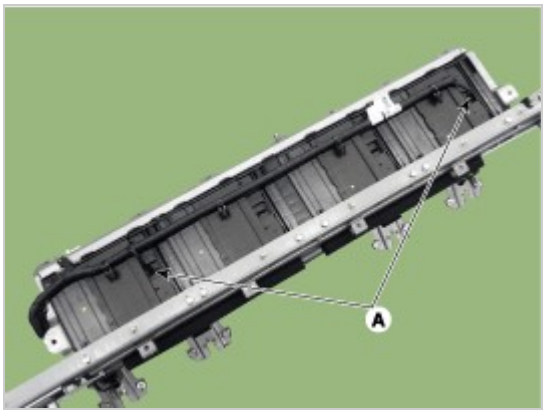

6. Remove the installation nut, then remove the battery module connector (A).
7. Remove the installation nut, then remove the power cable (+) terminal (B) and (-) terminal (C)

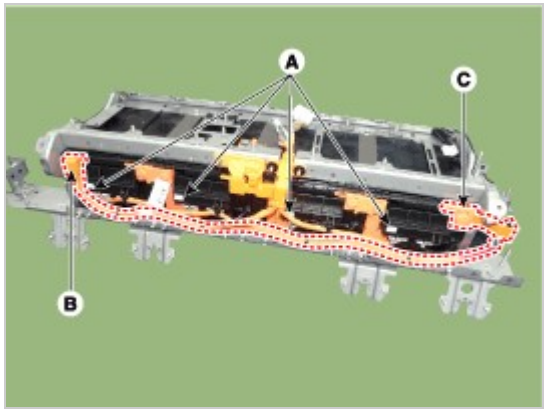

8. Remove the installation nut, then remove the safety plug bus bar (A).

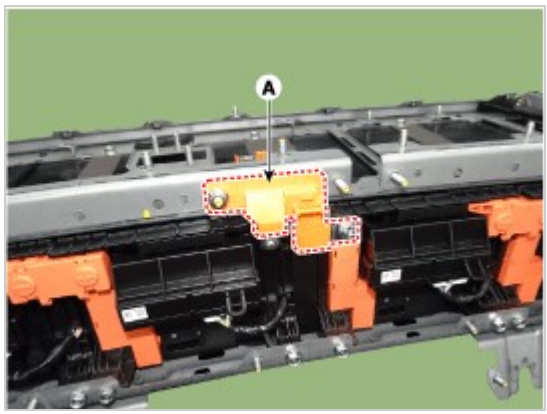

9. Remove the installation bolt, then remove the battery pack bracket (A).

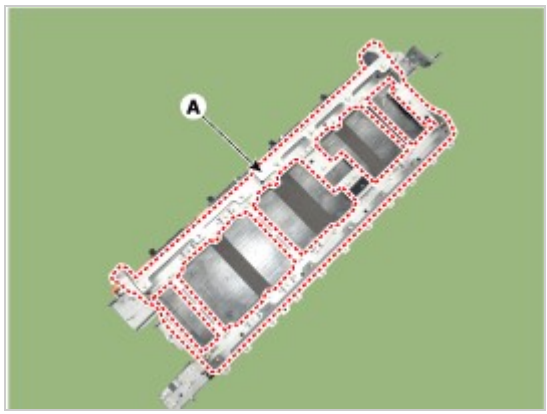

10. Remove the installation bolt, then remove the battery module (A) from the high voltage battery plate.

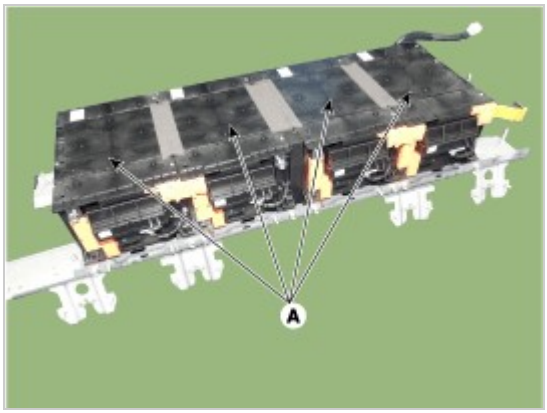

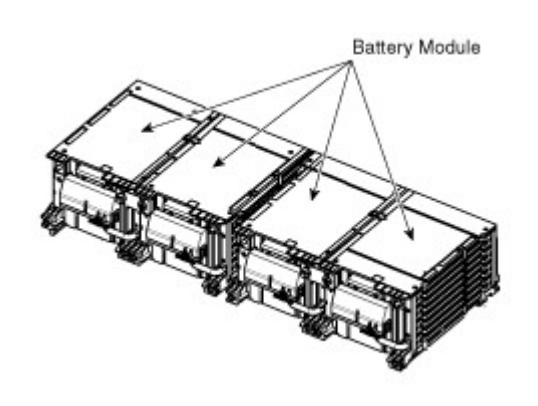

Reassembly

WARNING

- This hybrid system uses a DC 270V voltage system. Be sure to follow safety instructions below. Failure to follow safety instructions may result in serious injury or electrocution.

1. Install the battery pack assembly in the reverse order of removal.

Battery pack frame installation bolt&nut :
7.8 - 11.8 N.m (0.8 - 1.2 kgf.m, 5.8 - 8.7 lb-ft)
Battery pack cover installation bolt :
7.8 - 11.8 N.m (0.8 - 1.2 kgf.m, 5.8 - 8.7 lb-ft)
Power cable terminal tightening nut :
7.8 - 11.8 N.m (0.8 - 1.2 kgf.m, 5.8 - 8.7 lb-ft)
Battery module installation bolt :
7.8 - 11.8 N.m (0.8 - 1.2 kgf.m, 5.8 - 8.7 lb-ft)

Inspection

[Battery Pack Assembly Troubleshooting Chart]

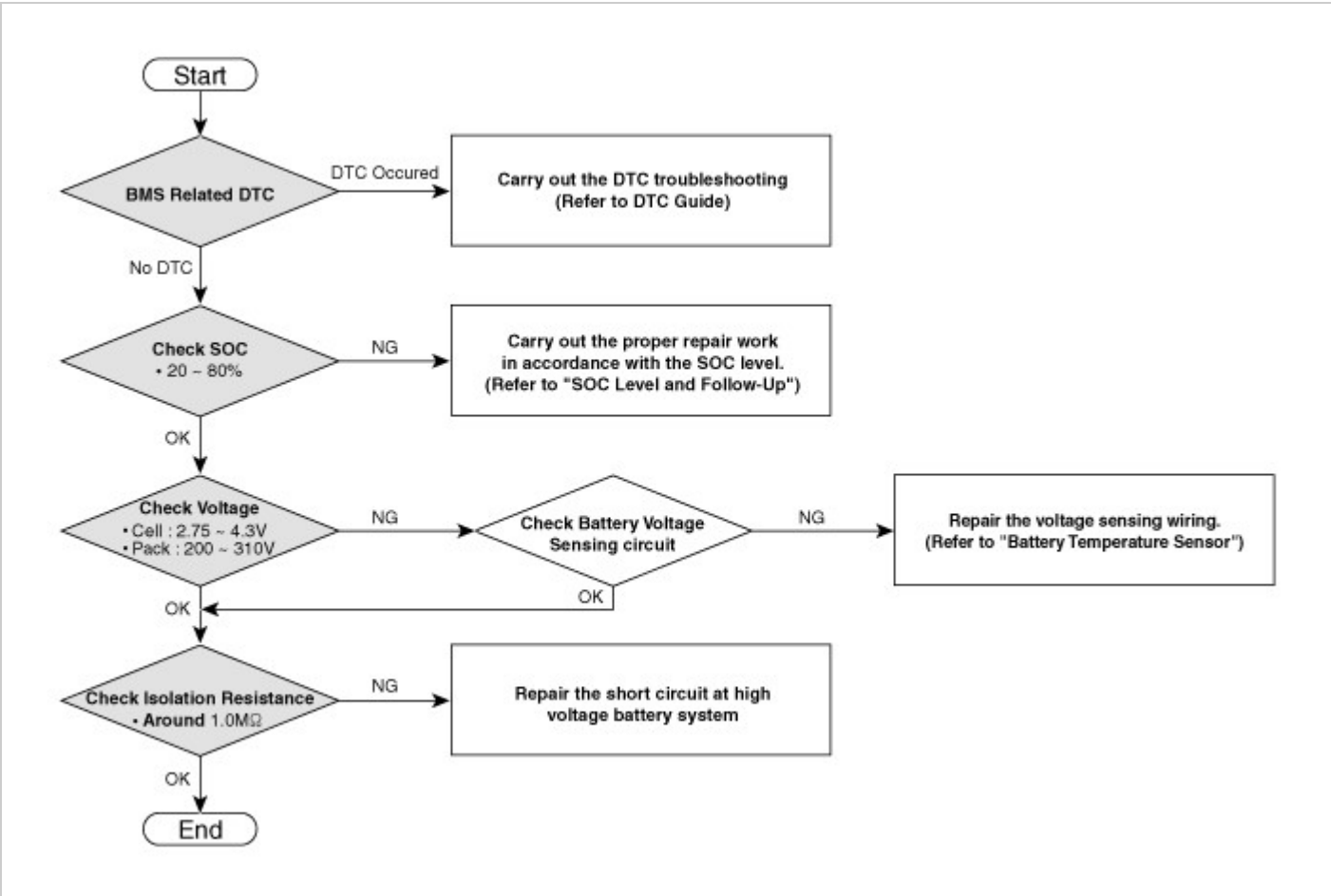

NOTICE

- For SOC check, refer to “SOC Inspection”
-

For voltage check, refer to “Battery Voltage Inspection”

- For battery voltage sensing circuit, refer to "Voltage Sensing Circuit Inspection"
- For isolation resistance check, refer to “Isolation Resistance Inspection”

[SOC Level and Follow-up]

SOC	Symptom	Warning Lamp			Follow-up
		MIL	Service	Fuel	
	• **Normal**	-	-	-	
10 - 15%	• **Motor torque limite** (Acceleration delay)	-	-	ON	• Refuel and check the SOC again
		ON	-	-	• Repair the MIL or Service Lamp related system • Charge the battery by starting the engine • Refuel if necessary
		ON	ON	-	
		-	ON	-	
		On	ON	ON	
5 - 10%	• **EV mode inhibited** • **FATC inhibited** • **LDC inhibited**	-	-	ON	• Refuel and check the SOC again
		ON	-	-	• Repair the MIL or Service Lamp related system • Charge the battery by starting the engine • Refuel if necessary
		ON	ON	-	
		-	ON	-	
		ON	ON	ON	
0 - 5%	• **Impossible to start**	ON	-	-	• Repair the MIL or Service Lamp related system • Start the engine with GDS to charge the battery • Refuel if necessary
		ON	ON	-	
		-	ON	-	
		ON	ON	ON	
0% 이하		ON	-	-	• Repair the MIL or Service Lamp related system • If necessary, Replace Battery Pack • Refuel if necessary

[SOC Inspection]

1. Connect the GDS to the Data Link Connector (DLC).
2. Turn the ignition switch ON.
3. Check the SOC in GDS service data.

SOC:20% - 90%

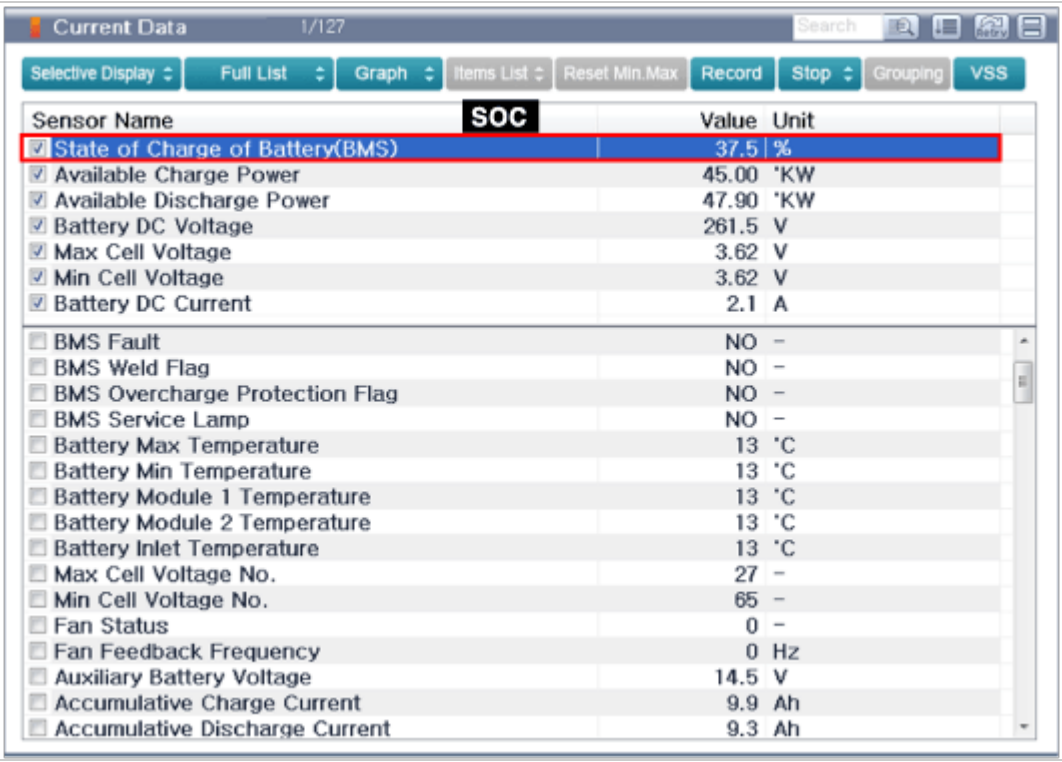

[Battery Voltage Inspection]

1. Connect the GDS to the Data Link Connector (DLC).
2. Turn the ignition switch ON.
3. Check the cell and pack voltage in GDS service data.

Cell Voltage:2.5 - 4.3 V
Pack Voltage:180 - 300 V

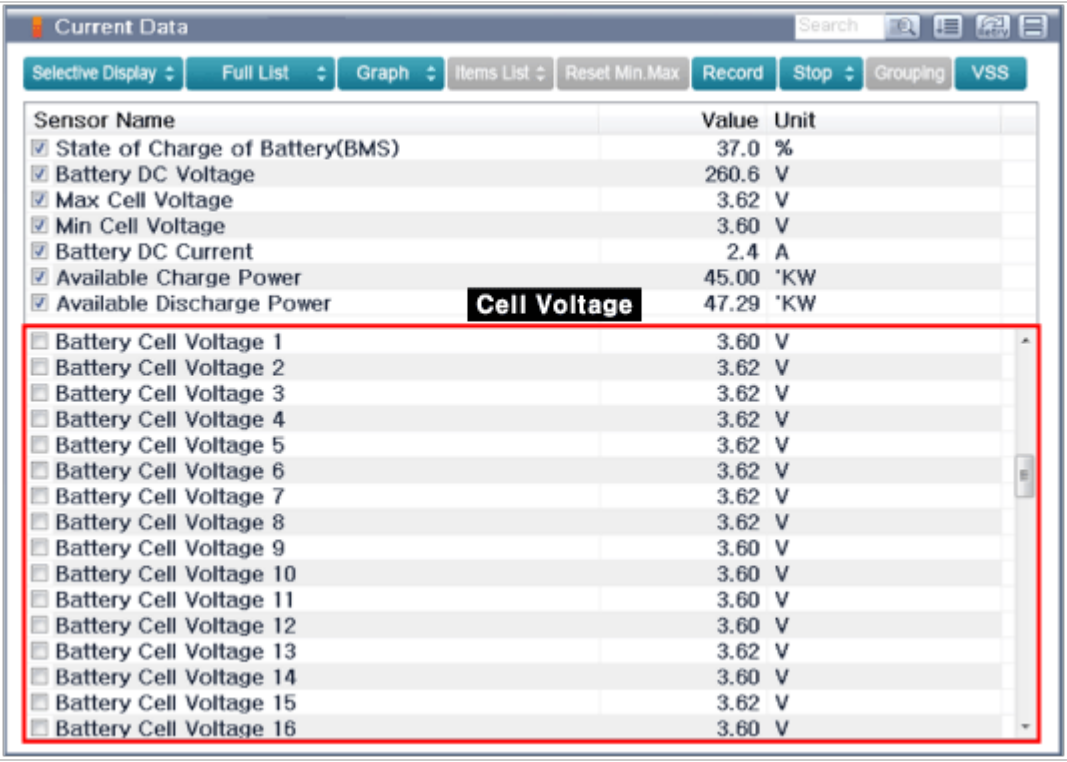

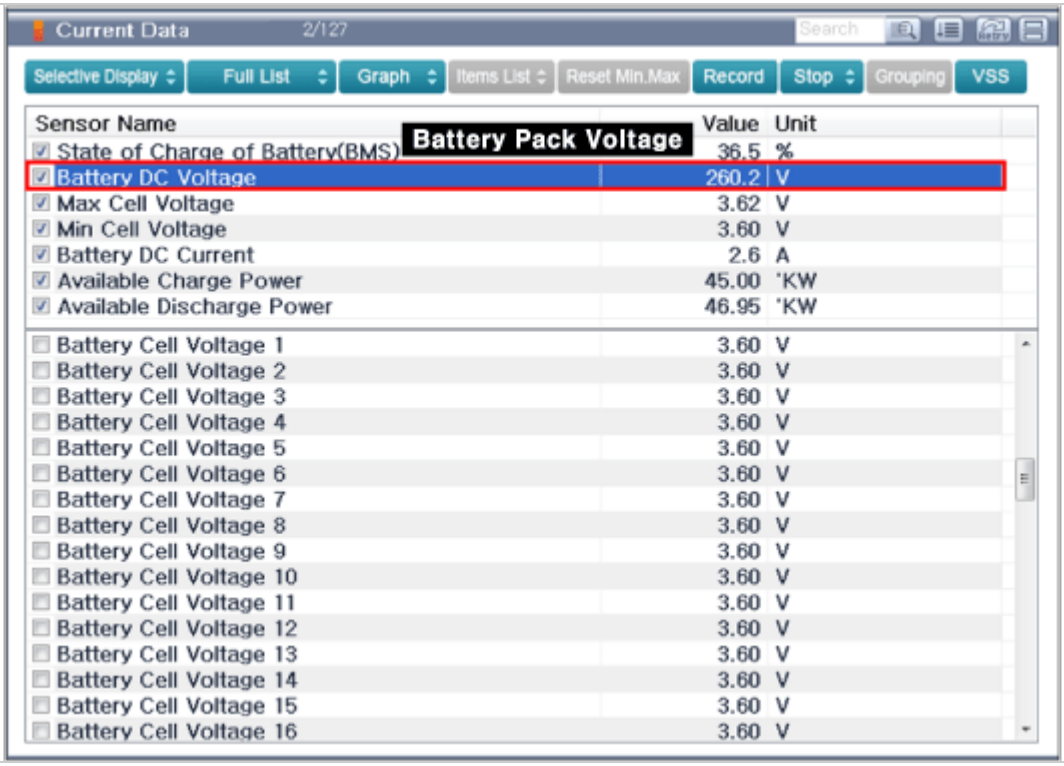

[Voltage Sensing Circuit Inspection]

1. Shut off the high voltage circuit (Refer to "High Voltage Shutoff Precedure").
2. Remove the battery temperature sensor (Refer to "Battery Temperature Sensor").
3. Check the continuity of the wiring between the harness connectors of the module and BMS ECU.

   Specification: below 1Ω

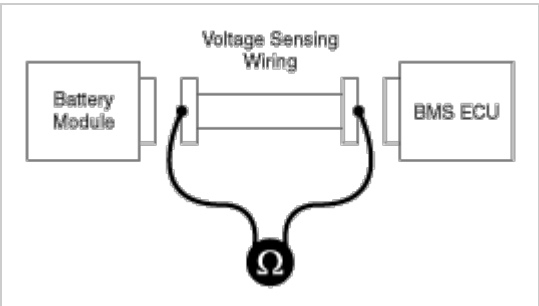

4. Connect the harness connectors to the BMS ECU.
5. For checking the short circuit to ground, measure resistance between the module harness connectors and chassis ground.

Specification: 1MΩ or higher

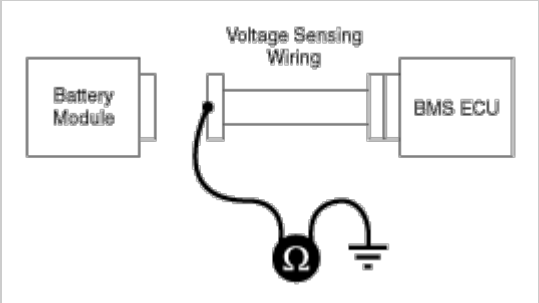

[Isolation Resistance Inspection]

1. Connect the GDS to the Data Link Connector (DLC).
2. Turn the ignition switch ON.
3. Check the isolation resistance in GDS service data.

Isolation Resistance: Around 1.0 MΩ

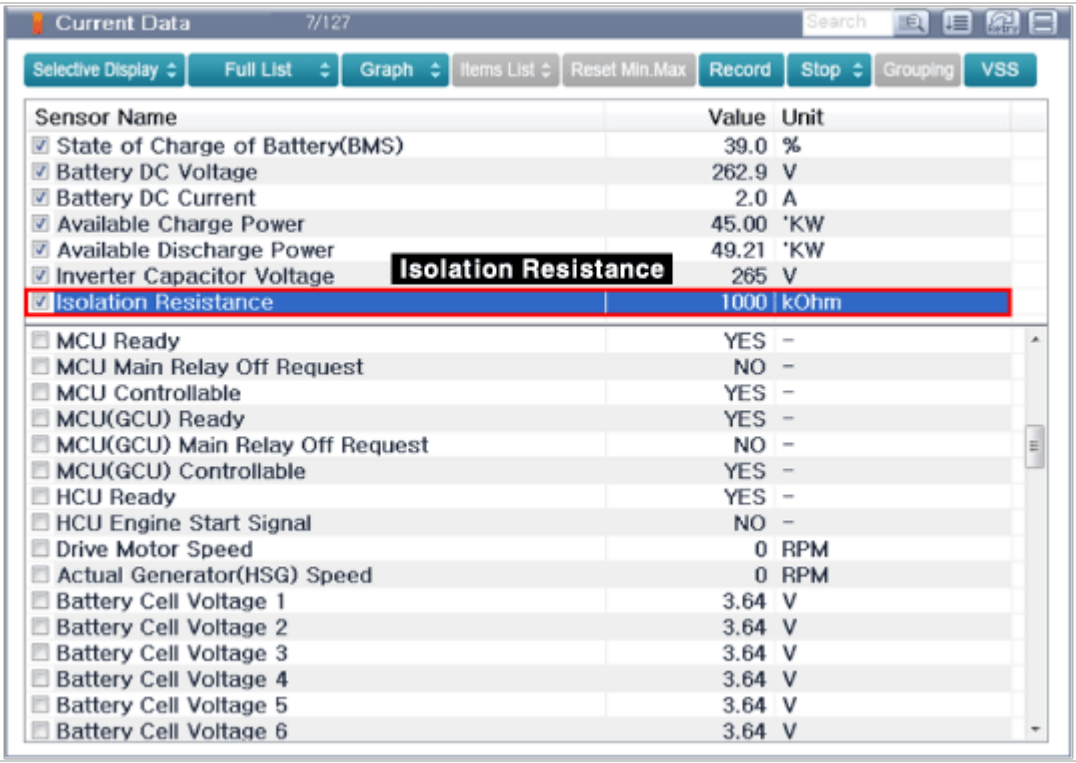

Hybrid Control System

Description

The Power Relay Assembly (PRA) consists of the positive and negative main relays, pre-charge relay, pre-charge resistor and battery current sensor. It is located inside the battery pack assembly and controls the high voltage power circuit between the high voltage battery and inverter by the control signal of BMS ECU.

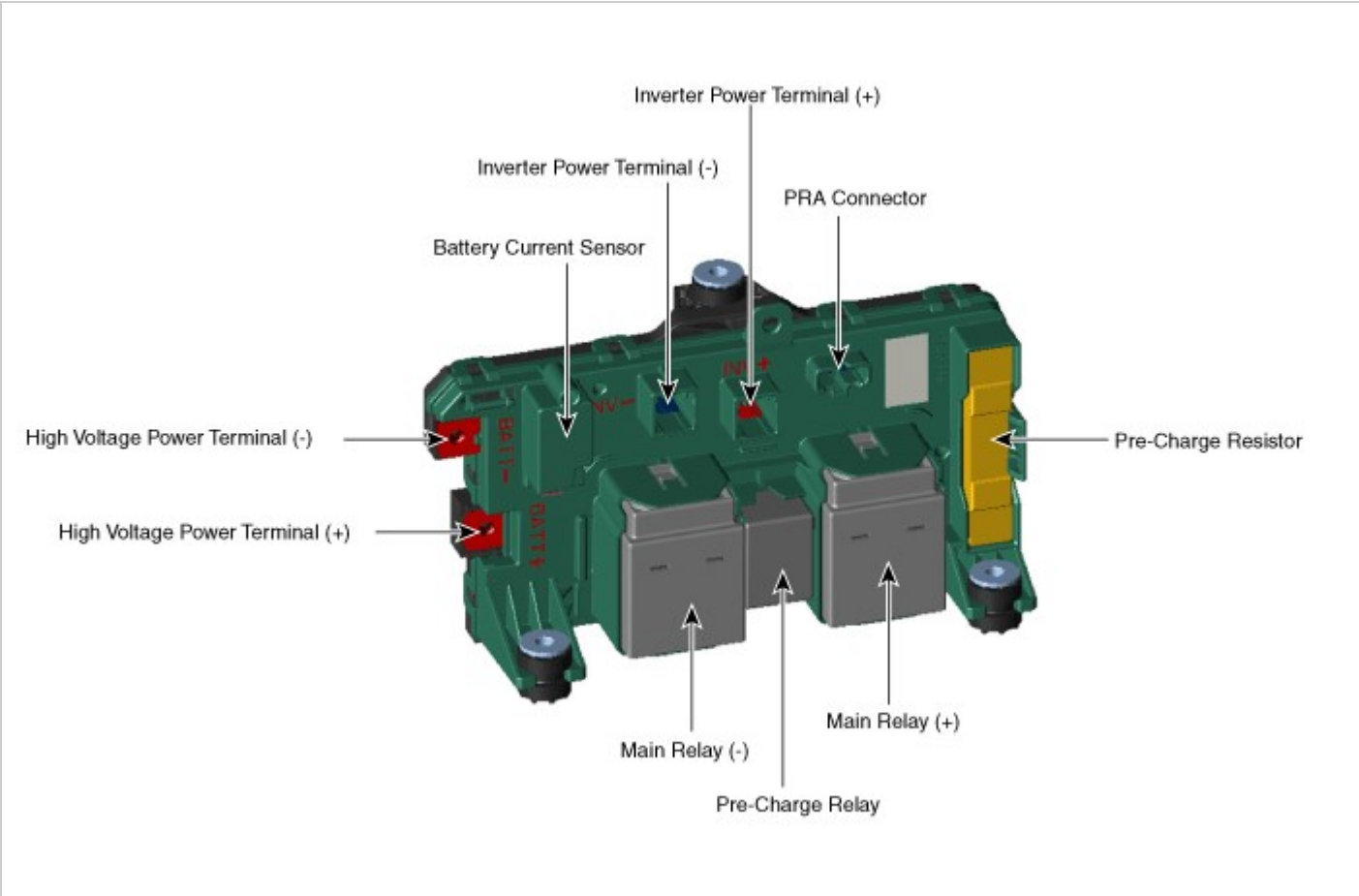

[PRA Operation Sequence]

IG START

① Pre-Charge Relay ON ⇨ ② Main Relay (-) ON ⇨ ③ Capacitor charged ⇨ ④ Main Relay (+) ON ⇨ ⑤ Pre-Charge Relay OFF

IG OFF

① Main Relay (+)(-) OFF

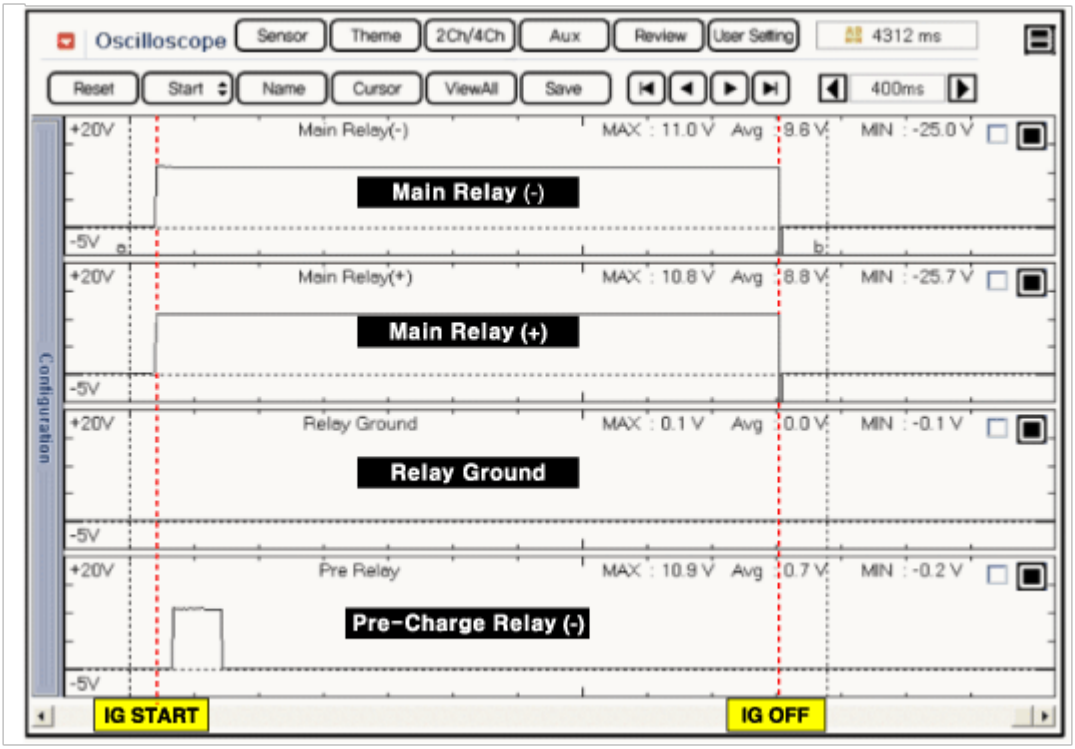

Removal

⚠ WARNING

- Be sure to read and follow the “General Safety Information and Caution” before doing any work related with the high voltage system. Failure to follow the safety instructions may result in serious electrical injuries.

1. Shut off the high voltage.
   (Refer to "High voltage Shut-off Procedures").
2. Remove the rear seat cushion.
   (Refer to Body - "Rear Seat Assembly")
3. Remove the rear door scuff trim.
   (Refer to Body - "Door Scuff Trim")
4. Remove the upper frame (A) after loosening the mounting bolts and nuts.

5. Remove the high voltage battery rear cover (A) after loosening the mounting bolts and nuts.

6. Remove the inlet cooling duct.
   (Refer to Hybrid Control System - "Cooling Duct")
7. Remove the high voltage power cable (+) terminal (A) and (-) terminal (B) after loosening the mounting bolts.

8. Disconnect the inverter power connector [+] (A), inverter power connector [-] (B) and battery current sensor connector (C).
9. Disconnect the PRA connector (D).

10. Remove the installation bolt (A) and nut (B), then remove the power relay assembly.

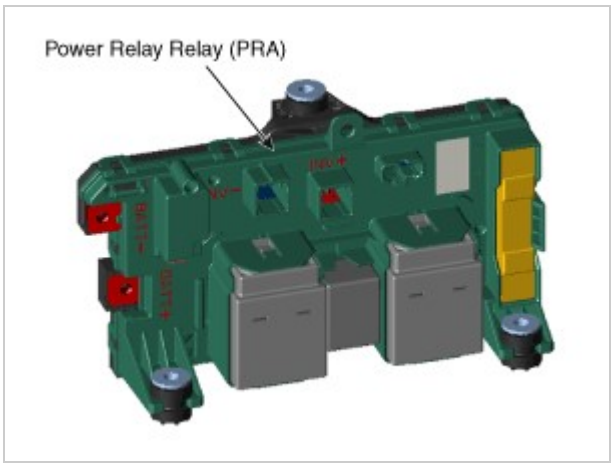

Installation

WARNING

- Be sure to read and follow the “General Safety Information and Caution” before doing any work related with the high voltage system. Failure to follow the safety instructions may result in serious electrical injuries.

1. Install the power relay assembly in the reverse order of removal.

PRA installation nut :7.8 - 11.8N.m (0.8 - 1.2kgf.m, 5.8 - 8.7lb-ft)
High voltage power cable terminal tightening nut:7.8 - 11.8N.m (0.8 - 1.2kgf.m, 5.8 - 8.7lb-ft)

Hybrid Control System

Description

Battery fuse box is located on the side of the high voltage battery pack. It prevents cells from being damaged by external factors, such as short or overcurrent.

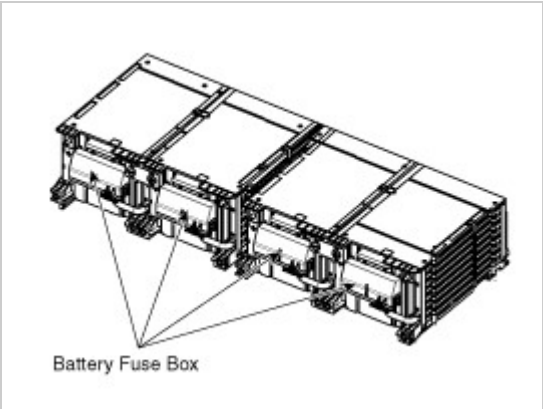

Specification

Item	Specification
Rated Voltage (V)	63 (DC)
Rated Current (A)	2 (DC)

Trouble Symptom Charts

– Follow the guide in case of DTC.

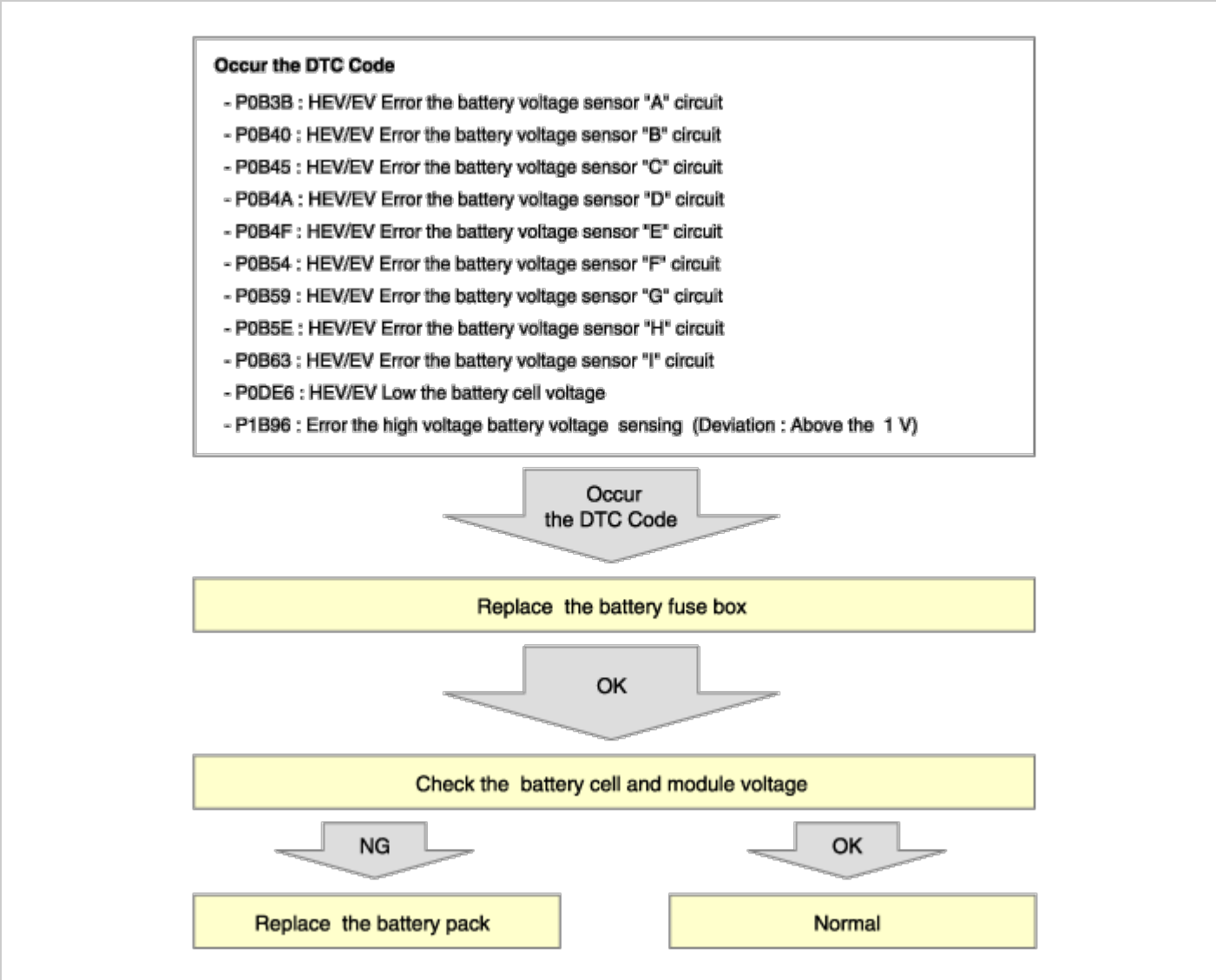

Circuit Diagram

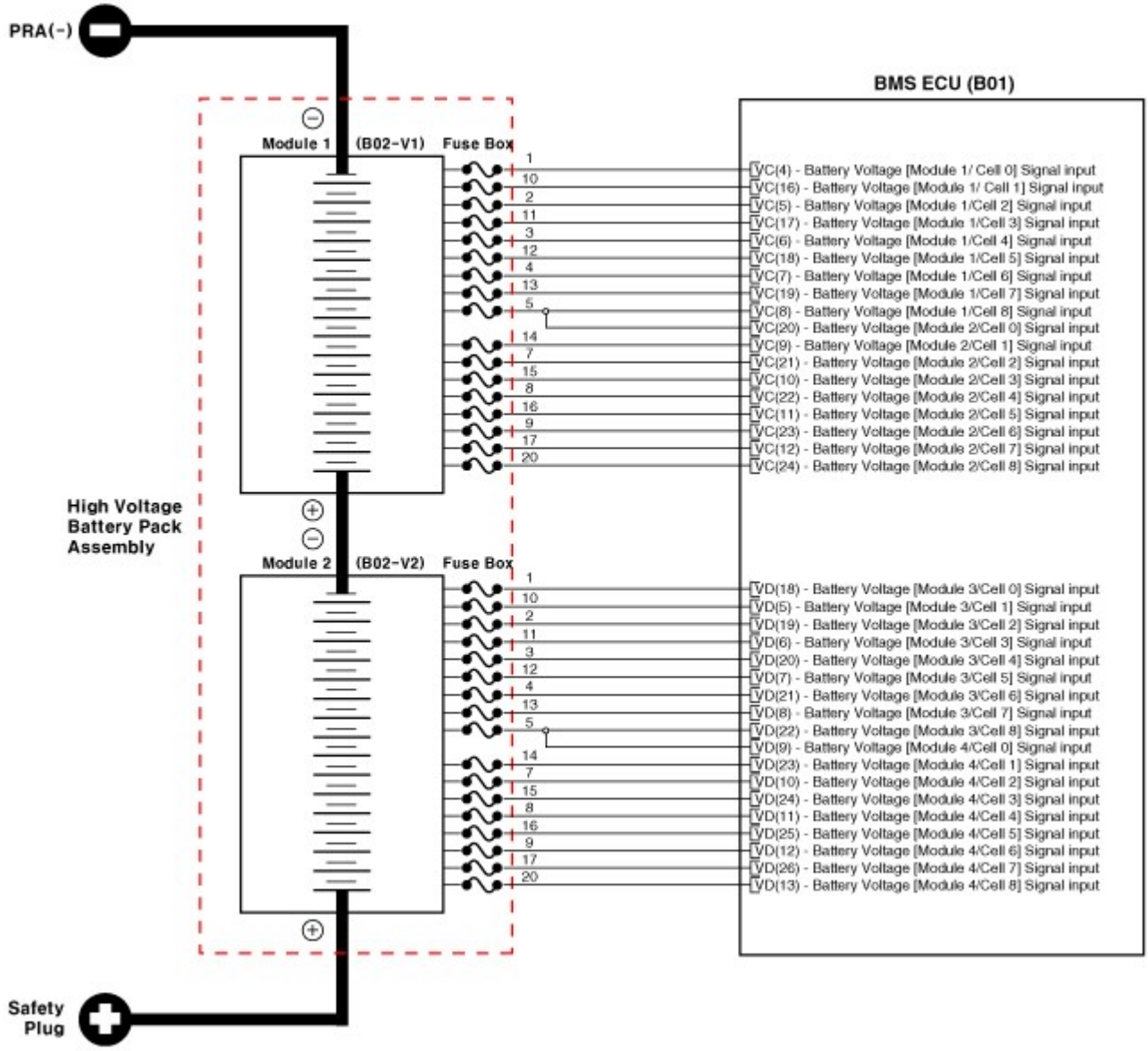
PRA(-)
BMS ECU (B01)
Module 1
(B02-V1)
Fuse Box
1
10
2
11
3
12
4
13
5
14
7
15
8
16
9
17
20
VC(4) - Battery Voltage [Module 1/ Cell 0] Signal input
VC(16) - Battery Voltage [Module 1/ Cell 1] Signal input
VC(5) - Battery Voltage [Module 1/Cell 2] Signal input
VC(17) - Battery Voltage [Module 1/Cell 3] Signal input
VC(6) - Battery Voltage [Module 1/Cell 4] Signal input
VC(18) - Battery Voltage [Module 1/Cell 5] Signal input
VC(7) - Battery Voltage [Module 1/Cell 6] Signal input
VC(19) - Battery Voltage [Module 1/Cell 7] Signal input
VC(8) - Battery Voltage [Module 1/Cell 8] Signal input
VC(20) - Battery Voltage [Module 2/Cell 0] Signal input
VC(9) - Battery Voltage [Module 2/Cell 1] Signal input
VC(21) - Battery Voltage [Module 2/Cell 2] Signal input
VC(10) - Battery Voltage [Module 2/Cell 3] Signal input
VC(22) - Battery Voltage [Module 2/Cell 4] Signal input
VC(11) - Battery Voltage [Module 2/Cell 5] Signal input
VC(23) - Battery Voltage [Module 2/Cell 6] Signal input
VC(12) - Battery Voltage [Module 2/Cell 7] Signal input
VC(24) - Battery Voltage [Module 2/Cell 8] Signal input
High Voltage
Battery Pack
Assembly
Module 2
(B02-V2)
Fuse Box
1
10
2
11
3
12
4
13
5
14
7
15
8
16
9
17
20
VD(18) - Battery Voltage [Module 3/Cell 0] Signal input
VD(5) - Battery Voltage [Module 3/Cell 1] Signal input
VD(19) - Battery Voltage [Module 3/Cell 2] Signal input
VD(6) - Battery Voltage [Module 3/Cell 3] Signal input
VD(20) - Battery Voltage [Module 3/Cell 4] Signal input
VD(7) - Battery Voltage [Module 3/Cell 5] Signal input
VD(21) - Battery Voltage [Module 3/Cell 6] Signal input
VD(8) - Battery Voltage [Module 3/Cell 7] Signal input
VD(22) - Battery Voltage [Module 3/Cell 8] Signal input
VD(9) - Battery Voltage [Module 4/Cell 0] Signal input
VD(23) - Battery Voltage [Module 4/Cell 1] Signal input
VD(10) - Battery Voltage [Module 4/Cell 2] Signal input
VD(24) - Battery Voltage [Module 4/Cell 3] Signal input
VD(11) - Battery Voltage [Module 4/Cell 4] Signal input
VD(25) - Battery Voltage [Module 4/Cell 5] Signal input
VD(12) - Battery Voltage [Module 4/Cell 6] Signal input
VD(26) - Battery Voltage [Module 4/Cell 7] Signal input
VD(13) - Battery Voltage [Module 4/Cell 8] Signal input
Safety
Plug

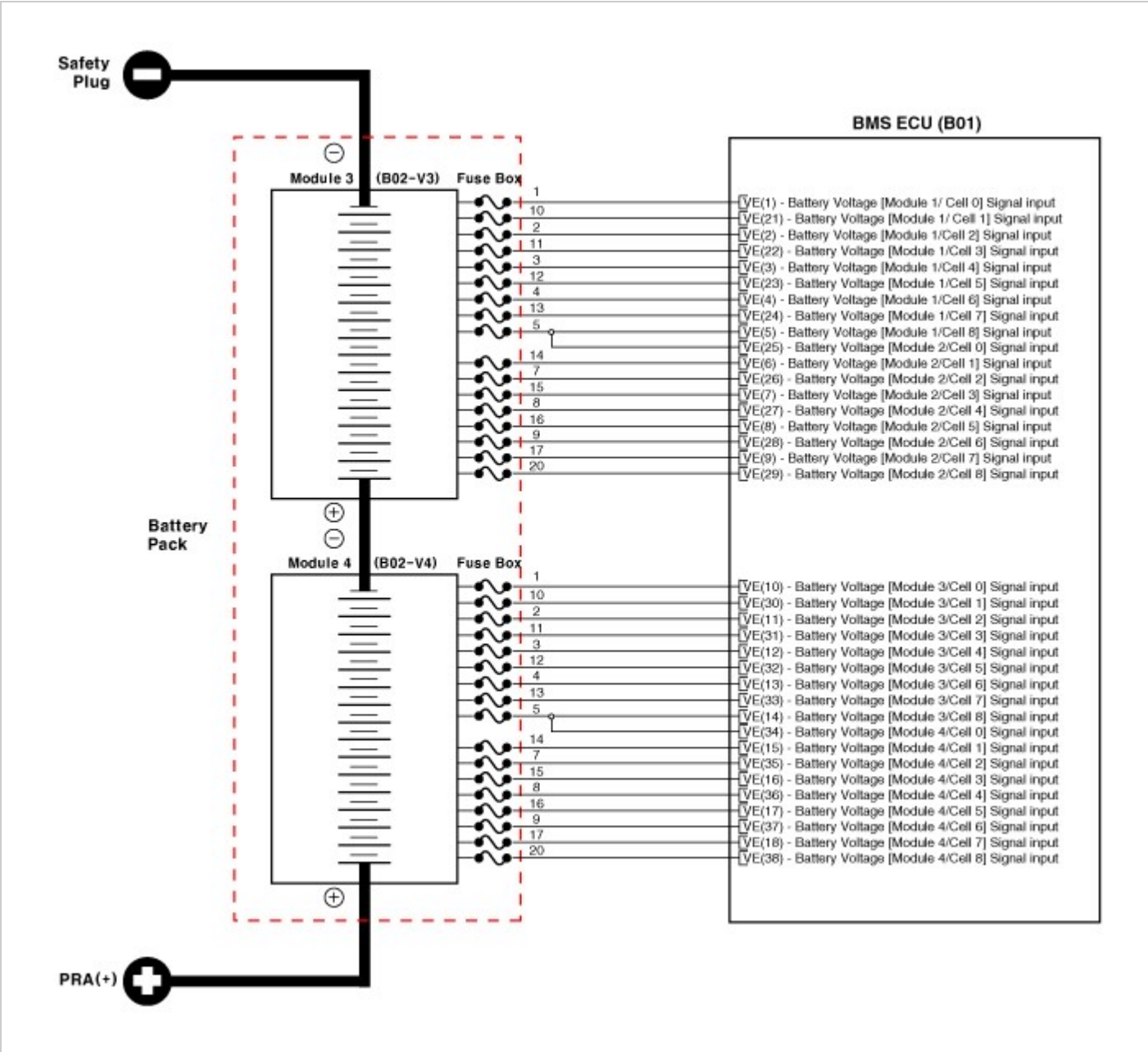

Removal

WARNING

- Be sure to read and follow the “General Safety Information and Caution” before doing any work related with the high voltage system. Failure to follow the safety instructions may result in serious electrical injuries.

1. Shut off the high voltage.
   (Refer to "High voltage Shut-off Procedures").
2. Remove the battery pack assembly.
   (Refer to "Battery Pack Assembly")
3. Remove the battery fuse box (B) after releasing the fixing hooks (A).

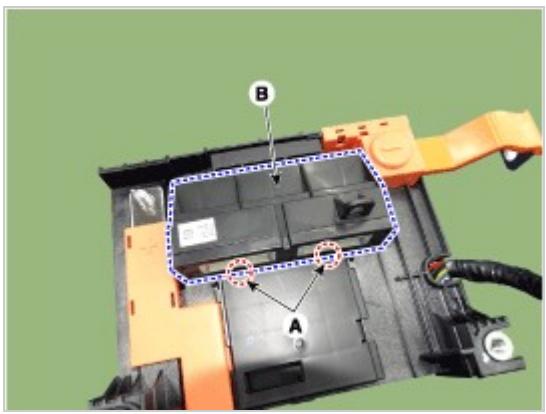

Installation

WARNING

- Be sure to read and follow the “General Safety Information and Caution” before doing any work related with the high voltage system. Failure to follow the safety instructions may result in serious electrical injuries.

1. Install the battery fuse box in the reverse order of removal.
2. Install the battery pack assembly in the reverse order of removal.
   (Refer to "Battery Pack Assembly")

Removal

[High voltage battery front cover]

1. Shut off the high voltage.
   (Refer to "High voltage Shut-off Procedures").
2. Remove the rear seat cushion.
   (Refer to Body - "Rear Seat Assembly")
3. Remove the rear door scuff trim.
   (Refer to Body - "Door Scuff Trim")
4. Remove the upper frame (A) after loosening the mounting bolts and nuts.

5. Remove the high voltage battery rear cover (A) after loosening the mounting bolts and nuts.

6. Remove the high voltage battery front cover (A) after loosening the mounting bolts and nuts.

[High voltage battery rear cover]

1. Shut off the high voltage.
   (Refer to "High voltage Shut-off Procedures").
2. Remove the rear seat cushion.
   (Refer to Body - "Rear Seat Assembly")
3. Remove the rear door scuff trim.
   (Refer to Body - "Door Scuff Trim")
4. Remove the upper frame (A) after loosening the mounting bolts and nuts.

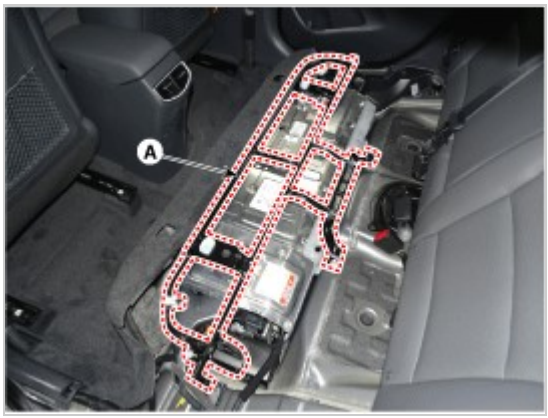

5. Remove the high voltage battery rear cover (A) after loosening the mounting bolts and nuts.

[Battery pack front cover]

1. Remove the high voltage battery pack assembly.
   (Refer to Hybrid Control System - "Battery Pack Assembly")
2. Remove the battery pack assembly front cover (A) after loosening the mounting nuts.

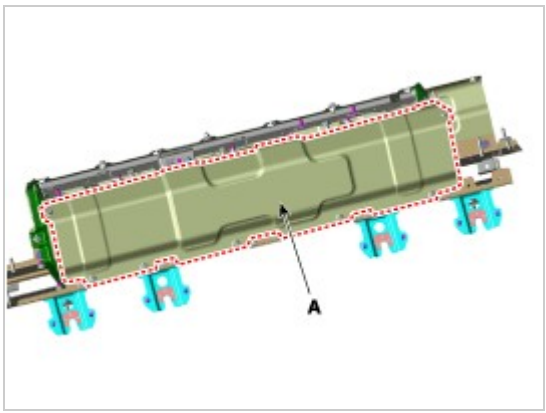

[Battery pack rear cover]

1. Remove the high voltage battery pack assembly.
   (Refer to Hybrid Control System - "Battery Pack Assembly")
2. Remove the battery pack assembly rear cover (A) after loosening the mounting nuts.

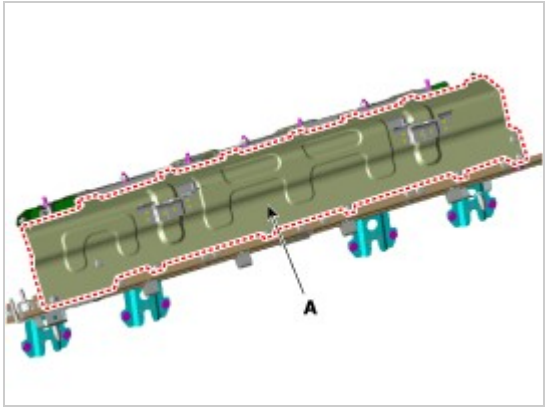

Installation

WARNING

- Be sure to read and follow the “General Safety Information and Caution” before doing any work related with the high voltage system. Failure to follow the safety instructions may result in serious electrical injuries.

1. Install the case in the reverse order of removal.

High voltage battery rear and front cover installation bolt/nut :7.8 - 11.8 N.m (0.8 - 1.2 kgf.m, 5.8 - 8.7 lb-ft)
Battery pack rear and front cover installation nut:7.8 - 11.8 N.m (0.8 - 1.2 kgf.m, 5.8 - 8.7 lb-ft)

Description

The high voltage battery system consists of the BMS ECU (Battery Management System ECU), Power Relay Assembly (PRA), safety plug, battery temperature sensor, and battery ambient sensor. Especially the BMS ECU controls SOC (State Of Charge), power, cell balancing, cooling and troubleshooting of the high voltage battery system.
The PRA includes main relays (positive, negative), pre-charge relay, pre-charge resistor and battery current sensor.

[Main Functionalities]

Item	Functionality
SOC control	• Optimize SOC by using voltage, current, temperature of the high voltage battery
Power control	• Predict available battery power, prevent from over-charging or discharging, improve durability and maximize charging/discharging energy by calculating optimum charging & discharging energy in accordance with the vehicle state
Power Relay control	• Supply or shut off the battery power when IG ON/OFF • Prevent from negligent accident by high voltage system trouble
Cooling System control	• Sustain the optimum temperature by controlling variable cooling fan speed in accordance with the maximum system temperature and deviation among battery modules
Troubleshooting	• Diagnose system fault • Limit battery power in various fail-safe level • Control power relays in case of system trouble

NOTICE

- SOC (State Of Charge): available energy of the high voltage battery

Specification

Safety Plug

▷ Specification

Item		Specification
Rated Voltage (V)		400
Rated Current (A)		80
Fuse Rated Current (A)		125
FuseMeltingTime	Rated Current × 110%	Min. 4 hr
	Rated Current × 200%	5 - 100 sec
	Rated Current × 300%	0.5 - 15 sec
	Rated Current × 500%	Max. 1 sec

Main Relay

▷ Specification

Item		Specification
Contact	Rated Voltage (V)	450
	Rated Current (A)	80
Coil	Operating Voltage (V)	12
	Resistance (Ω)	29.7 - 36.3[20°C (68°F)]

Pre-Charge Relay

▷ Specification

Item		Specification
Contact	Rated Voltage (V)	450
	Rated Current (A)	20
Coil	Operating Voltage (V)	12
	Resistance (Ω)	59.4 - 72.6[20°C (68°F)]

Pre-Charge Resistor

▷ Specification

Item	Specification
Resistance (Ω)	40 [20°C (68°F)]
Rated Current (A)	40

Battery Current Sensor

▷ Specification

Current (A)	Output Voltage (V)
-300(Charge)	0.5
0	2.5
+300(Discharge)	4.5

Battery Temperature Sensor (HEV)

▷ Type: Thermisor type

▷ Specification

[Air Inlet]

Temperature		Resistance (kΩ)
°C	°F	
-50	-58	314.9 - 344.6
-40	-40	181.1 - 196.0
-30	-22	107.5 - 115.2
-20	-4	65.82 - 69.77
-10	14	41.43 - 43.52
0	32	26.74 - 27.83
10	50	17.67 - 18.25
20	68	11.94 - 12.24
30	86	8.214 - 8.411
40	104	5.738 - 5.918
50	122	4.082 - 4.239
60	140	2.954 - 3.087
70	158	2.172 - 2.284
80	176	1.621 - 1.715
90	194	1.227 - 1.305
100	212	0.941 - 1.006
110	230	0.731 - 0.785

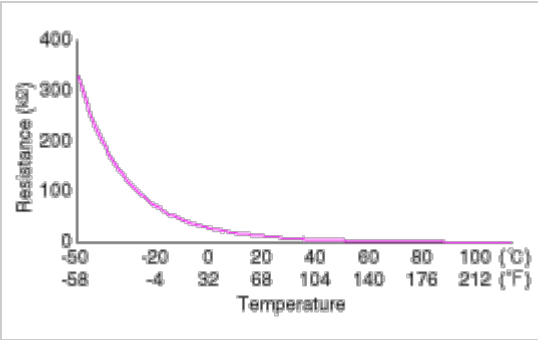

[Cell]

Temperature		Resistance (kΩ)
°C	°F	
-50	-58	351.1 - 385.0
-40	-40	196.6 - 213.1
-30	-22	114.4 - 122.7
-20	-4	68.94 - 73.15
-10	14	42.59 - 44.76
0	32	27.14 - 28.27
10	50	17.78 - 18.36
20	68	11.96 - 12.25
30	86	8.202 - 8.399
40	104	5.721 - 5.901
50	122	4.069 - 4.226
60	140	2.945 - 3.078
70	158	2.169 - 2.280
80	176	1.622 - 1.715
90	194	1.228 - 1.306

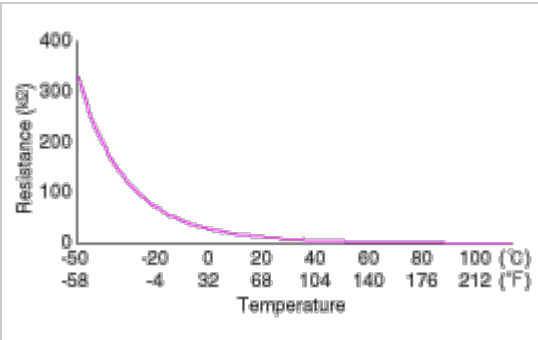

Hybrid Control System

Component Location

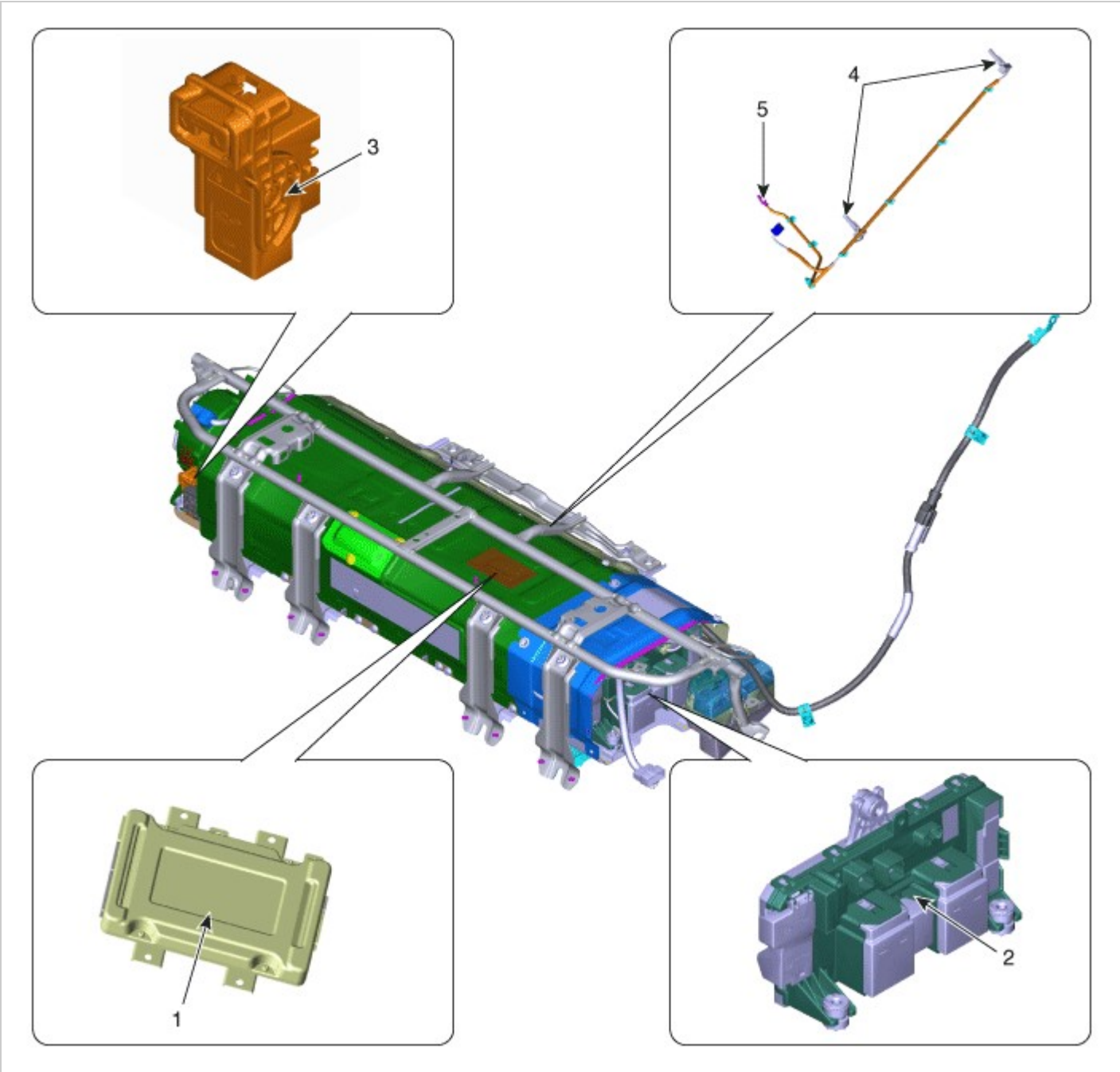

1. BMS ECU
2. Power Relay Assembly (PRA)
3. Safety Plug
4. Battery Temperature Sensor
5. Battery Ambient Sensor

NOTICE

- Main Relays (Positive, Negative), Pre-Charge Relay, Pre-Charge Resistor, and Battery Current Sensor are integrated into the PRA.

Hybrid Control System

Troubleshooting Flow

INPUT

Battery Voltage | Battery Temperature | Battery Current | Aux. Battery Voltage | Cooling Fan Voltage | CAN

FAULT DETECT

- **Fault detected when the detection condition lasts for more than the detection time**
  - Detection Condition : Voltage, Current, Temperature, Resistance, Power etc.
  - Detection Time : 0 ~ 10 sec.
- **Detection Items**
  - Voltage, Current, Power
  - Temperature, SOC, Balancing & Aging
  - Current Sensor, Voltage Sensor, Temperature Sensor
  - Aux. Battery, Cooling Fan, Insulation
  - Power Relay, Safety Plug (including Fuse), CAN Communication

PROCESS

- **Transmit information or take follow-up based on the result of fault detection**
- **Processing Items**

1. BMS Status : READY / CONTROLLABLE / FAULT
2. Power Limitation : Set power limitation level & slope (Immediate ~ 1kW/100ms)
3. Relay Control : ON/OFF
4. Cooling Fan Control : Fan Speed
5. Warning Lamp : MIL, Service Lamp

FAULT DEACTIVATE

- **Fault deactivated when conditions to allow deactivation exist after the fault was earlier set.**

Schematic Diagram

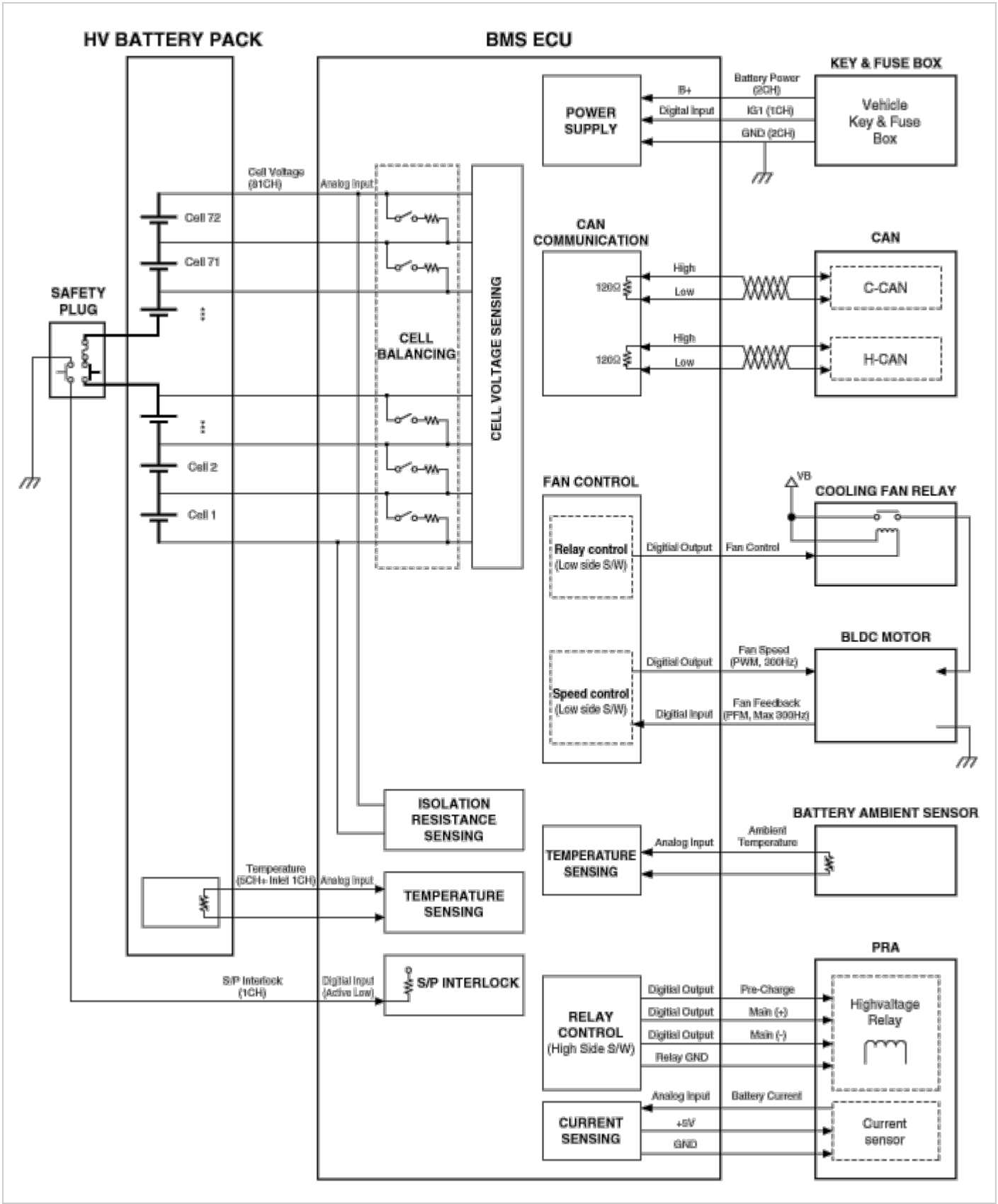
HV BATTERY PACK
BMS ECU
KEY & FUSE BOX
Vehicle Key & Fuse Box
Battery Power (2CH)
B+
Digital Input
IG1 (1CH)
GND (2CH)
POWER SUPPLY
Cell Voltage (81CH)
Analog Input
Cell 72
Cell 71
Cell 2
Cell 1
SAFETY PLUG
CELL BALANCING
CELL VOLTAGE SENSING
CAN COMMUNICATION
CAN
High
Low
120Ω
C-CAN
H-CAN
FAN CONTROL
VB
COOLING FAN RELAY
Relay control (Low side S/W)
Digital Output
Fan Control
BLDC MOTOR
Speed control (Low side S/W)
Fan Speed (PWM, 300Hz)
Digital Input
Fan Feedback (PFM, Max 300Hz)
ISOLATION RESISTANCE SENSING
BATTERY AMBIENT SENSOR
TEMPERATURE SENSING
Ambient Temperature
Temperature (5CH+ Inlet 1CH)
S/P Interlock (1CH)
Digital Input (Active Low)
S/P INTERLOCK
PRA
RELAY CONTROL (High Side S/W)
Pre-Charge
Main (+)
Main (-)
Relay GND
Highvaltage Relay
CURRENT SENSING
Battery Current
+5V
GND
Current sensor

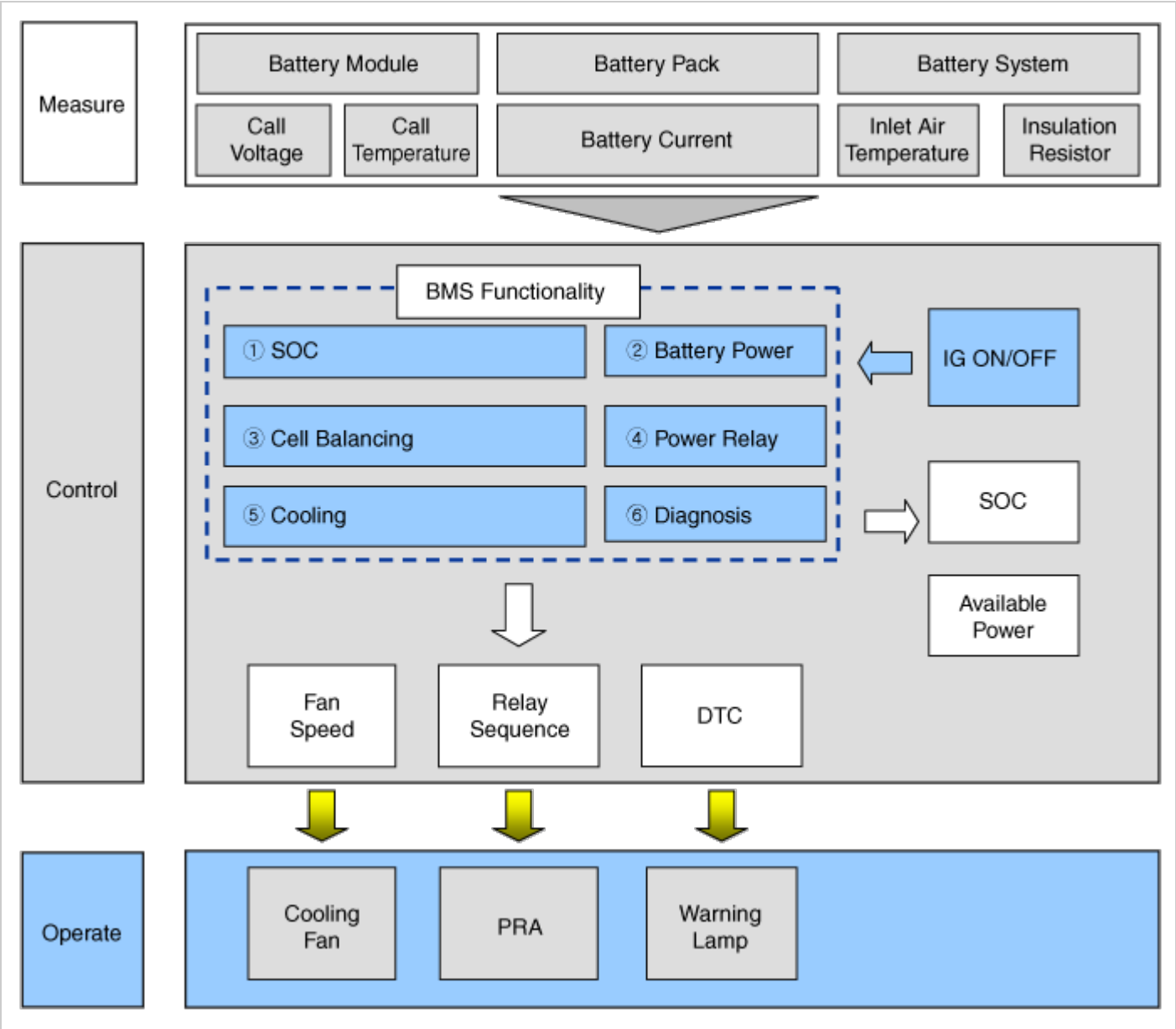

Hybrid Control System

BMS ECU Terminal And Input/Output Signal

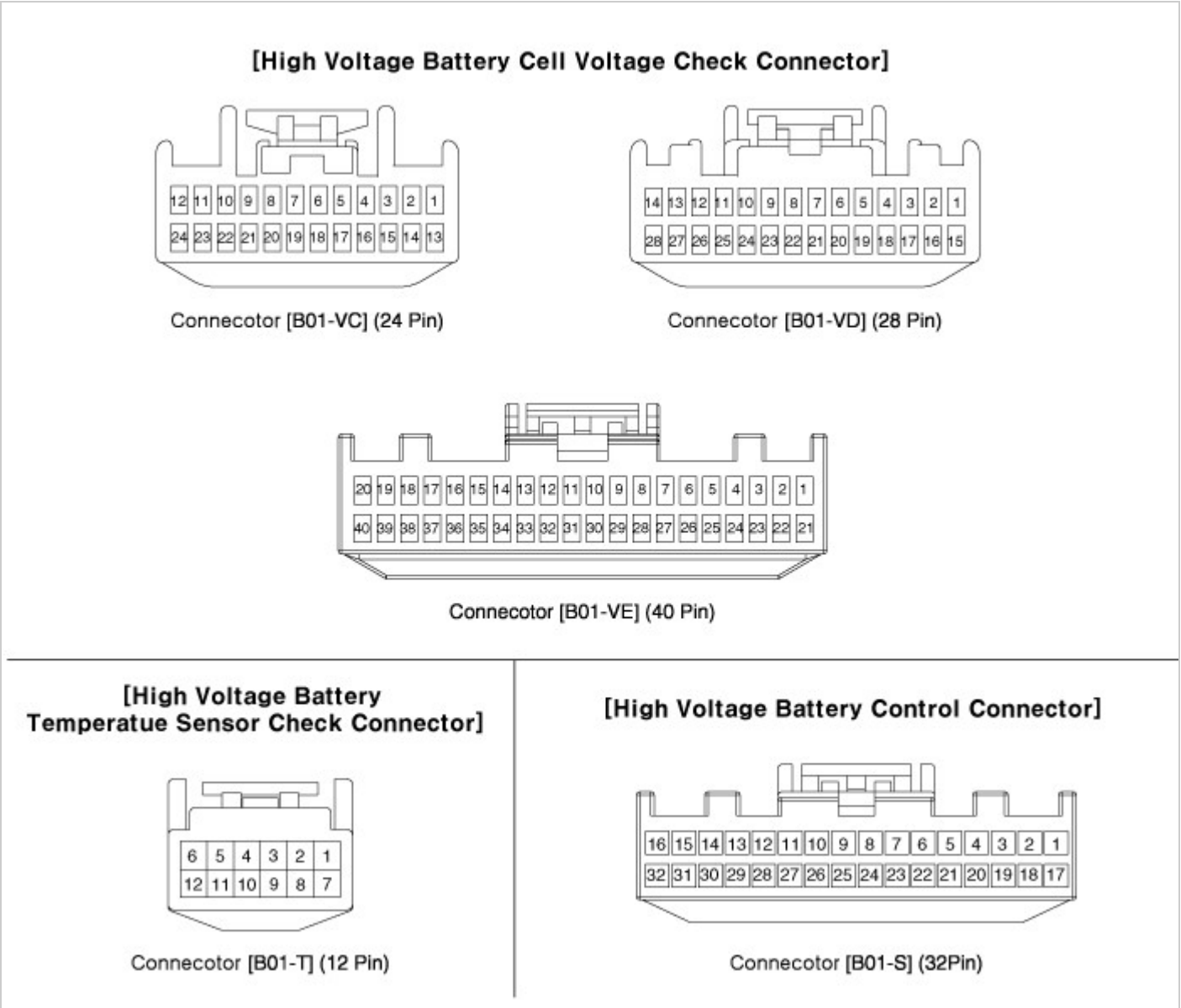

Terminal Funxtion

Connector [B01-VC] (24pin) : High Voltage Battery Cell Voltage Check Connector

Pin No.	Description	Connected to
1	-	-
2	-	-
3	-	-
4	Battery Voltage [Module 1/ Cell 0] signal input	Battery Module [1]
5	Battery Voltage [Module 1/ Cell 2] signal input	Battery Module [1]
6	Battery Voltage [Module 1/ Cell 4] signal input	Battery Module [1]
7	Battery Voltage [Module 1/ Cell 6] signal input	Battery Module [1]
8	Battery Voltage [Module 1/ Cell 8] signal input	Battery Module [1]
9	Battery Voltage [Module 2/ Cell 1] signal input	Battery Module [1]
10	Battery Voltage [Module 2/ Cell 3] signal input	Battery Module [1]
11	Battery Voltage [Module 2/ Cell 5] signal input	Battery Module [1]
12	Battery Voltage [Module 2/ Cell 7] signal input	Battery Module [1]
13	-	-
14	-	-
15	-	-
16	Battery Voltage [Module 1/ Cell 1] signal input	Battery Module [1]
17	Battery Voltage [Module 1/ Cell 3] signal input	Battery Module [1]
18	Battery Voltage [Module 1/ Cell 5] signal input	Battery Module [1]
19	Battery Voltage [Module 1/ Cell 7] signal input	Battery Module [1]
20	Battery Voltage [Module 2/ Cell 0] signal input	Battery Module [1]
21	Battery Voltage [Module 2/ Cell 2] signal input	Battery Module [1]
22	Battery Voltage [Module 2/ Cell 4] signal input	Battery Module [1]

23	Battery Voltage [Module 2/ Cell 6] signal input	Battery Module [1]
24	Battery Voltage [Module 2/ Cell 8] signal input	Battery Module [1]

Connector [B01-VD] (28pin) : High Voltage Battery Cell Voltage Check Connector

Pin No.	Description	Connected to
1	-	-
2	-	-
3	-	-
4	-	-
5	Battery Voltage [Module 3/ Cell 1] signal input	Battery Module [2]
6	Battery Voltage [Module 3/ Cell 3] signal input	Battery Module [2]
7	Battery Voltage [Module 3/ Cell 5] signal input	Battery Module [2]
8	Battery Voltage [Module 3/ Cell 7] signal input	Battery Module [2]
9	Battery Voltage [Module 4/ Cell 0] signal input	Battery Module [2]
10	Battery Voltage [Module 4/ Cell 2] signal input	Battery Module [2]
11	Battery Voltage [Module 4/ Cell 4] signal input	Battery Module [2]
12	Battery Voltage [Module 4/ Cell 6] signal input	Battery Module [2]
13	Battery Voltage [Module 4/ Cell 8] signal input	Battery Module [2]
14	-	-
15	-	-
16	-	-
17	-	-
18	Battery Voltage [Module 3/ Cell 0] signal input	Battery Module [2]
19	Battery Voltage [Module 3/ Cell 2] signal input	Battery Module [2]
20	Battery Voltage [Module 3/ Cell 4] signal input	Battery Module [2]
21	Battery Voltage [Module 3/ Cell 6] signal input	Battery Module [2]
22	Battery Voltage [Module 3/ Cell 8] signal input	Battery Module [2]
23	Battery Voltage [Module 4/ Cell 1] signal input	Battery Module [2]
24	Battery Voltage [Module 4/ Cell 3] signal input	Battery Module [2]
25	Battery Voltage [Module 4/ Cell 5] signal input	Battery Module [2]
26	Battery Voltage [Module 4/ Cell 7] signal input	Battery Module [2]
27	-	-
28	-	-

Connector [B01-VE] (40pin) : High Voltage Battery Cell Voltage Check Connector

Pin No.	Description	Connected to
1	Battery Voltage [Module 5/ Cell 0] signal input	Battery Module [3]
2	Battery Voltage [Module 5/ Cell 2] signal input	Battery Module [3]
3	Battery Voltage [Module 5/ Cell 4] signal input	Battery Module [3]
4	Battery Voltage [Module 5/ Cell 6] signal input	Battery Module [3]
5	Battery Voltage [Module 5/ Cell 8] signal input	Battery Module [3]
6	Battery Voltage [Module 6/ Cell 1] signal input	Battery Module [3]
7	Battery Voltage [Module 6/ Cell 3] signal input	Battery Module [3]
8	Battery Voltage [Module 6/ Cell 5] signal input	Battery Module [3]
9	Battery Voltage [Module 6/ Cell 7] signal input	Battery Module [3]
10	Battery Voltage [Module 7/ Cell 0] signal input	Battery Module [4]
11	Battery Voltage [Module 7/ Cell 2] signal input	Battery Module [4]
12	Battery Voltage [Module 7/ Cell 4] signal input	Battery Module [4]
13	Battery Voltage [Module 7/ Cell 6] signal input	Battery Module [4]
14	Battery Voltage [Module 7/ Cell 8] signal input	Battery Module [4]
15	Battery Voltage [Module 8/ Cell 1] signal input	Battery Module [4]
16	Battery Voltage [Module 8/ Cell 3] signal input	Battery Module [4]
17	Battery Voltage [Module 8/ Cell 5] signal input	Battery Module [4]
18	Battery Voltage [Module 8/ Cell 7] signal input	Battery Module [4]
19	-	-
20	-	-
21	Battery Voltage [Module 5/ Cell 1] signal input	Battery Module [3]
22	Battery Voltage [Module 5/ Cell 3] signal input	Battery Module [3]

23	Battery Voltage [Module 5/ Cell 5] signal input	Battery Module [3]
24	Battery Voltage [Module 5/ Cell 7] signal input	Battery Module [3]
25	Battery Voltage [Module 6/ Cell 0] signal input	Battery Module [3]
26	Battery Voltage [Module 6/ Cell 2] signal input	Battery Module [3]
27	Battery Voltage [Module 6/ Cell 4] signal input	Battery Module [3]
28	Battery Voltage [Module 6/ Cell 6] signal input	Battery Module [3]
29	Battery Voltage [Module 6/ Cell 8] signal input	Battery Module [3]
30	Battery Voltage [Module 7/ Cell 1] signal input	Battery Module [4]
31	Battery Voltage [Module 7/ Cell 3] signal input	Battery Module [4]
32	Battery Voltage [Module 7/ Cell 5] signal input	Battery Module [4]
33	Battery Voltage [Module 7/ Cell 7] signal input	Battery Module [4]
34	Battery Voltage [Module 8/ Cell 0] signal input	Battery Module [4]
35	Battery Voltage [Module 8/ Cell 2] signal input	Battery Module [4]
36	Battery Voltage [Module 8/ Cell 4] signal input	Battery Module [4]
37	Battery Voltage [Module 8/ Cell 6] signal input	Battery Module [4]
38	Battery Voltage [Module 8/ Cell 8] signal input	Battery Module [4]
39	-	-
40	-	-

Connector [B01-T] (12pin) : High Voltage Battery Temperatue Sensor Check Connector

Pin No.	Description	Connected to
1	Battery Temperatue Sensor [Module 1] signal input	Battery Temperatue Sensor
2	Battery Temperatue Sensor [Module 4] signal input	Battery Temperatue Sensor
3	-	-
4	Battery Temperatue Sensor [Air Inlet] signal input	Battery Temperatue Sensor
5	-	-
6	-	-
7	Sensor ground [Module 1]	Battery Temperatue Sensor
8	Sensor ground [Module 4]	Battery Temperatue Sensor
9	-	-
10	Sensor ground [Air Inlet]	Battery Temperatue Sensor
11	-	-
12	-	-

Connector [B01-S] (32pin) : High Voltage Battery Control Connector

Pin No.	Description	Connected to
1	Battery Power (B+)	BMS Extension Connector BF11 (1)
2	Battery Power (B+)	BMS Extension Connector BF11 (11)
3	Battery Power (B+)	BMS Extension Connector BF11 (12)
4	Cooling fan feedback signal input	BMS Blower Motor
5	H-CAN [High]	Other Control Module
6	H-CAN [Low]	Other Control Module
7	P-CAN [High]	Other Control Module
8	P-CAN [Low]	Other Control Module
9	-	-
10	-	-
11	Sensor Power (+5V)	Battery Current Sensor [PRA]
12	Battery Current Sensor signal input	Battery Current Sensor [PRA]
13	-	-
14	-	-
15	Pre-Charge Relay Control	Pre-Charge Relay
16	Main Relay [+] Control	Main Relay [+]
17	Ground	Chassis Ground
18	Ground	Chassis Ground
19	Cooling Fan Relay Control	BMS Extension Connector BF11 (4)
20	Cooling Fan Speed signal input	BMS Blower Motor
21	-	-
22	-	-

23	-	-
24	Clash signal input	BMS Extension Connector BF11 (18)
25	Safety Plug Interlock signal input	Safety Plug
26	-	
27	Sensor ground	Battery Current Sensor [PRA]
28	-	-
29	-	-
30	VPD Relay Control	VPD Relay
31	-	-
32	Main Relay [-] Control	Main Relay [-]

Circuit Diagram

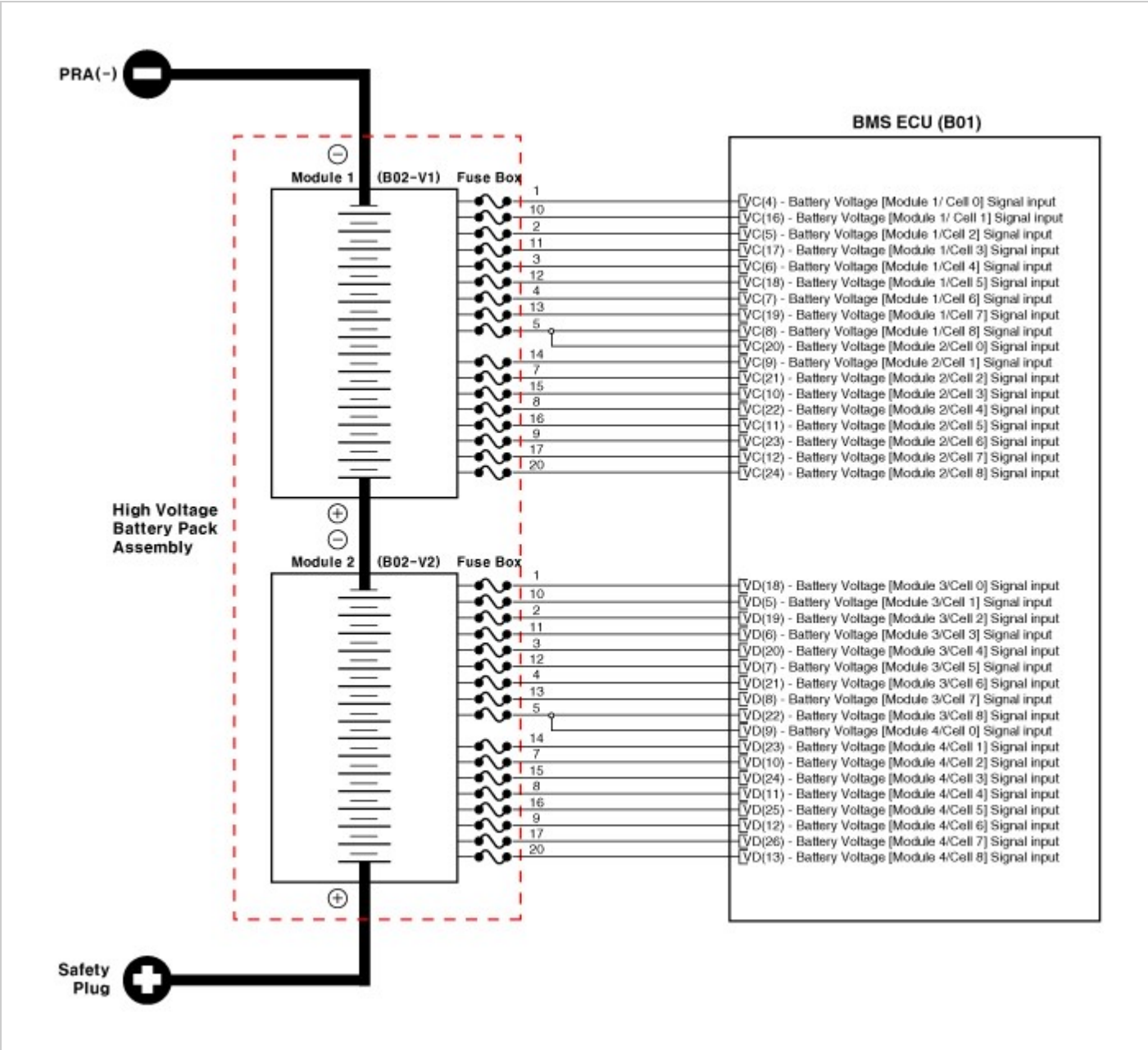

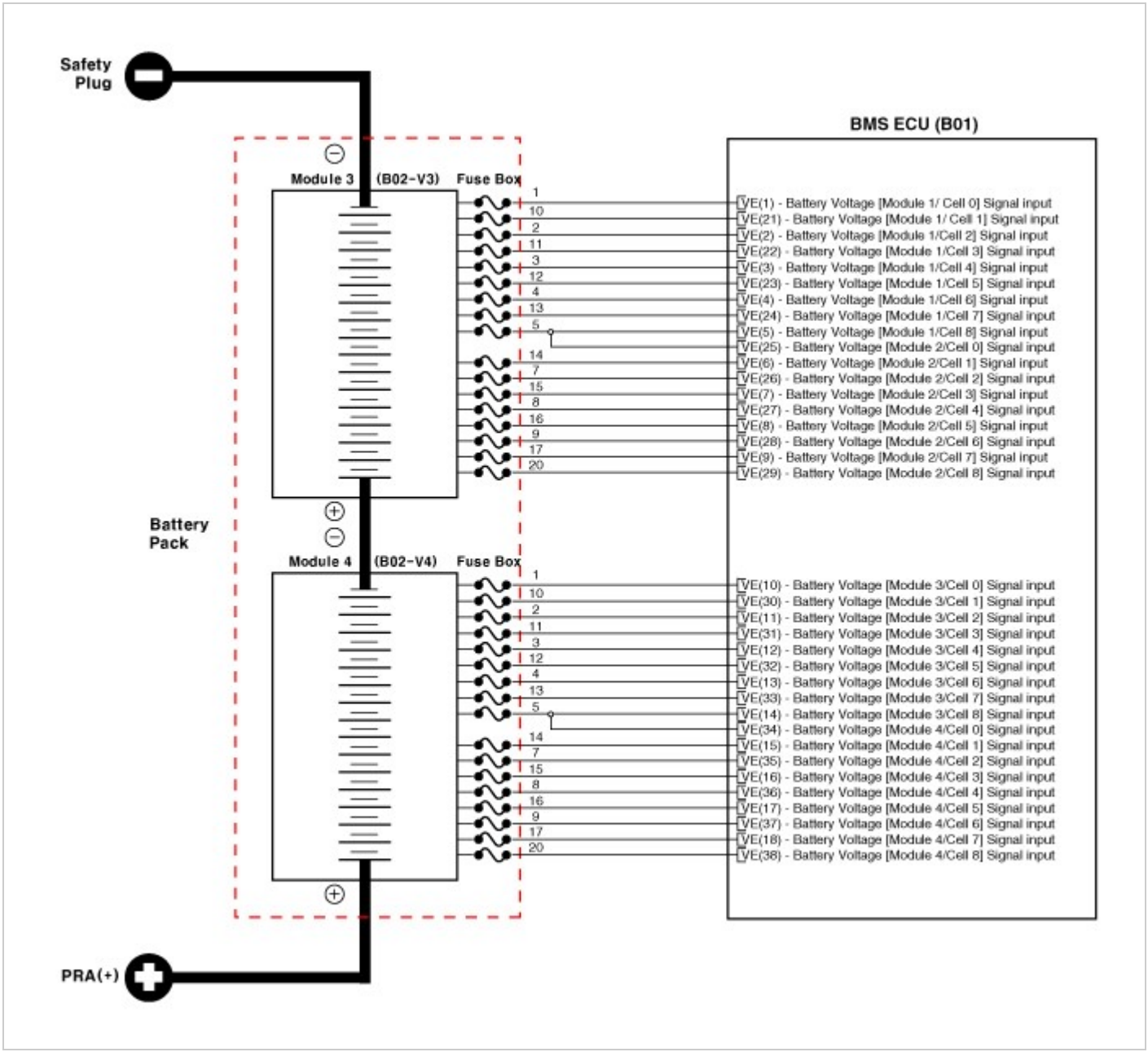
Safety Plug
BMS ECU (B01)
Module 3
(B02-V3)
Fuse Box
1
10
2
11
3
12
4
13
5
14
7
15
8
16
9
17
20
VE(1) - Battery Voltage [Module 1/ Cell 0] Signal input
VE(21) - Battery Voltage [Module 1/ Cell 1] Signal input
VE(2) - Battery Voltage [Module 1/Cell 2] Signal input
VE(22) - Battery Voltage [Module 1/Cell 3] Signal input
VE(3) - Battery Voltage [Module 1/Cell 4] Signal input
VE(23) - Battery Voltage [Module 1/Cell 5] Signal input
VE(4) - Battery Voltage [Module 1/Cell 6] Signal input
VE(24) - Battery Voltage [Module 1/Cell 7] Signal input
VE(5) - Battery Voltage [Module 1/Cell 8] Signal input
VE(25) - Battery Voltage [Module 2/Cell 0] Signal input
VE(6) - Battery Voltage [Module 2/Cell 1] Signal input
VE(26) - Battery Voltage [Module 2/Cell 2] Signal input
VE(7) - Battery Voltage [Module 2/Cell 3] Signal input
VE(27) - Battery Voltage [Module 2/Cell 4] Signal input
VE(8) - Battery Voltage [Module 2/Cell 5] Signal input
VE(28) - Battery Voltage [Module 2/Cell 6] Signal input
VE(9) - Battery Voltage [Module 2/Cell 7] Signal input
VE(29) - Battery Voltage [Module 2/Cell 8] Signal input
Battery Pack
Module 4
(B02-V4)
Fuse Box
VE(10) - Battery Voltage [Module 3/Cell 0] Signal input
VE(30) - Battery Voltage [Module 3/Cell 1] Signal input
VE(11) - Battery Voltage [Module 3/Cell 2] Signal input
VE(31) - Battery Voltage [Module 3/Cell 3] Signal input
VE(12) - Battery Voltage [Module 3/Cell 4] Signal input
VE(32) - Battery Voltage [Module 3/Cell 5] Signal input
VE(13) - Battery Voltage [Module 3/Cell 6] Signal input
VE(33) - Battery Voltage [Module 3/Cell 7] Signal input
VE(14) - Battery Voltage [Module 3/Cell 8] Signal input
VE(34) - Battery Voltage [Module 4/Cell 0] Signal input
VE(15) - Battery Voltage [Module 4/Cell 1] Signal input
VE(35) - Battery Voltage [Module 4/Cell 2] Signal input
VE(16) - Battery Voltage [Module 4/Cell 3] Signal input
VE(36) - Battery Voltage [Module 4/Cell 4] Signal input
VE(17) - Battery Voltage [Module 4/Cell 5] Signal input
VE(37) - Battery Voltage [Module 4/Cell 6] Signal input
VE(18) - Battery Voltage [Module 4/Cell 7] Signal input
VE(38) - Battery Voltage [Module 4/Cell 8] Signal input
PRA(+)

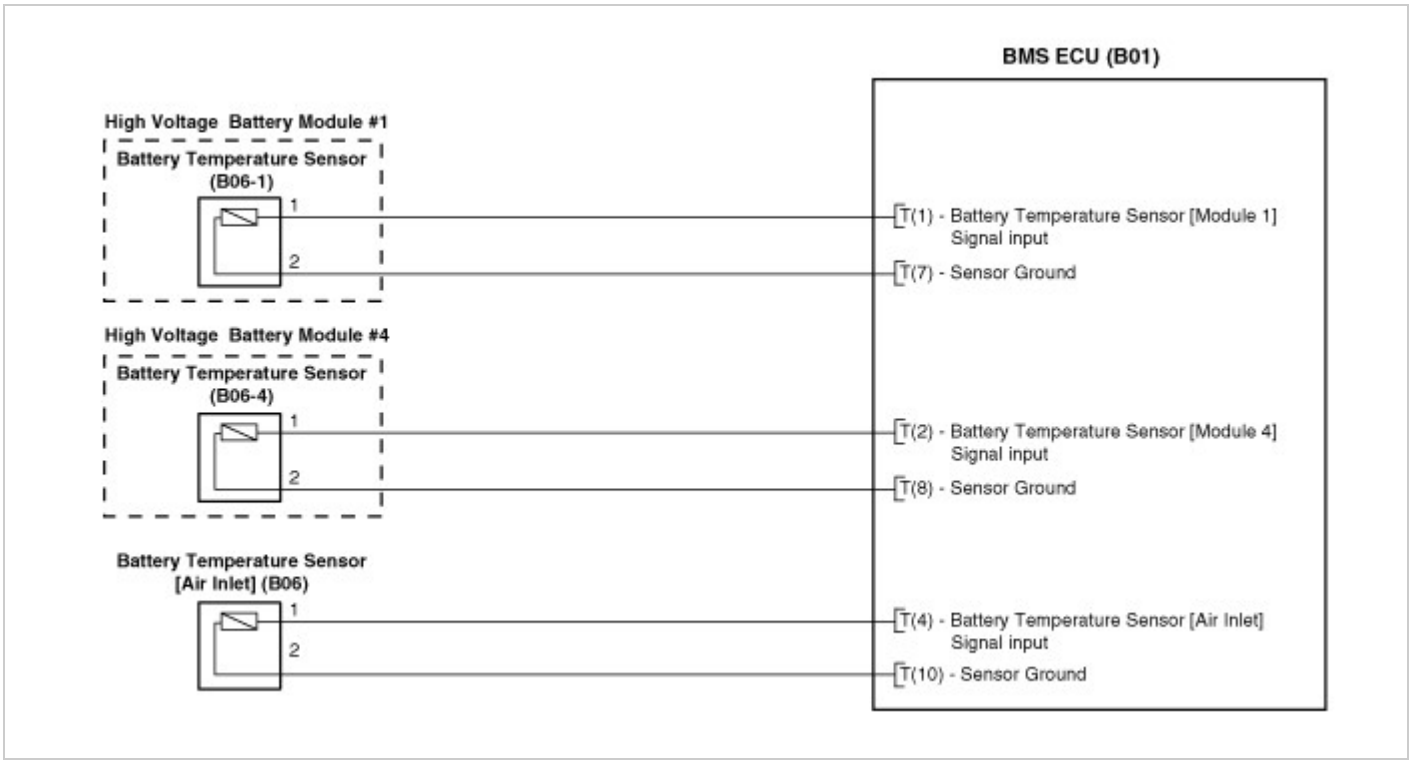
BMS ECU (B01)
High Voltage Battery Module #1
Battery Temperature Sensor (B06-1)
1
2
T(1) - Battery Temperature Sensor [Module 1] Signal input
T(7) - Sensor Ground
High Voltage Battery Module #4
Battery Temperature Sensor (B06-4)
1
2
T(2) - Battery Temperature Sensor [Module 4] Signal input
T(8) - Sensor Ground
Battery Temperature Sensor [Air Inlet] (B06)
1
2
T(4) - Battery Temperature Sensor [Air Inlet] Signal input
T(10) - Sensor Ground

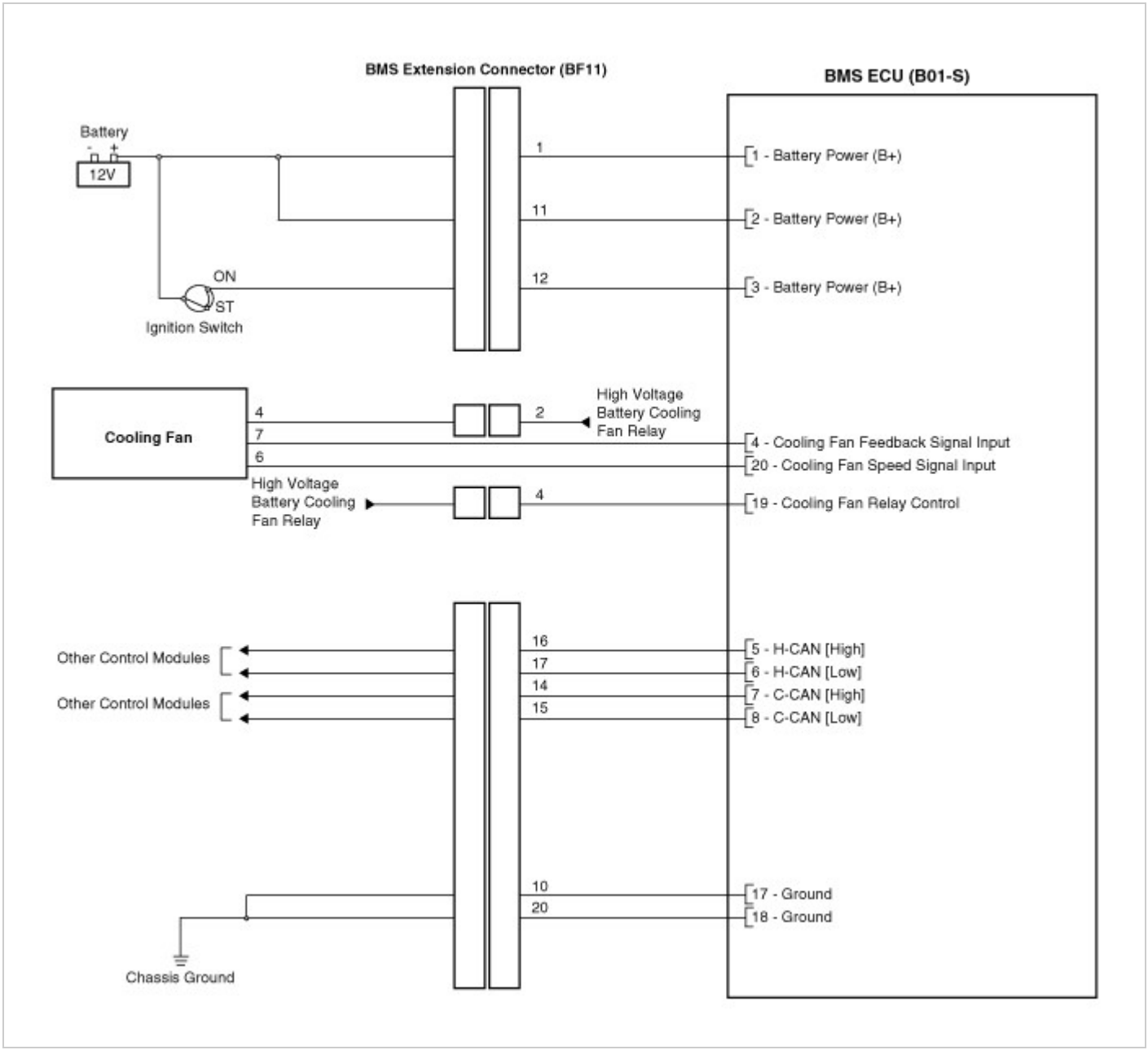
BMS Extension Connector (BF11)
BMS ECU (B01-S)
Battery
-
+
12V
ON
ST
Ignition Switch
1
11
12
1 - Battery Power (B+)
2 - Battery Power (B+)
3 - Battery Power (B+)
Cooling Fan
4
7
6
2
High Voltage
Battery Cooling
Fan Relay
4 - Cooling Fan Feedback Signal Input
20 - Cooling Fan Speed Signal Input
High Voltage
Battery Cooling
Fan Relay
4
19 - Cooling Fan Relay Control
Other Control Modules
Other Control Modules
16
17
14
15
5 - H-CAN [High]
6 - H-CAN [Low]
7 - C-CAN [High]
8 - C-CAN [Low]
10
20
17 - Ground
18 - Ground
Chassis Ground

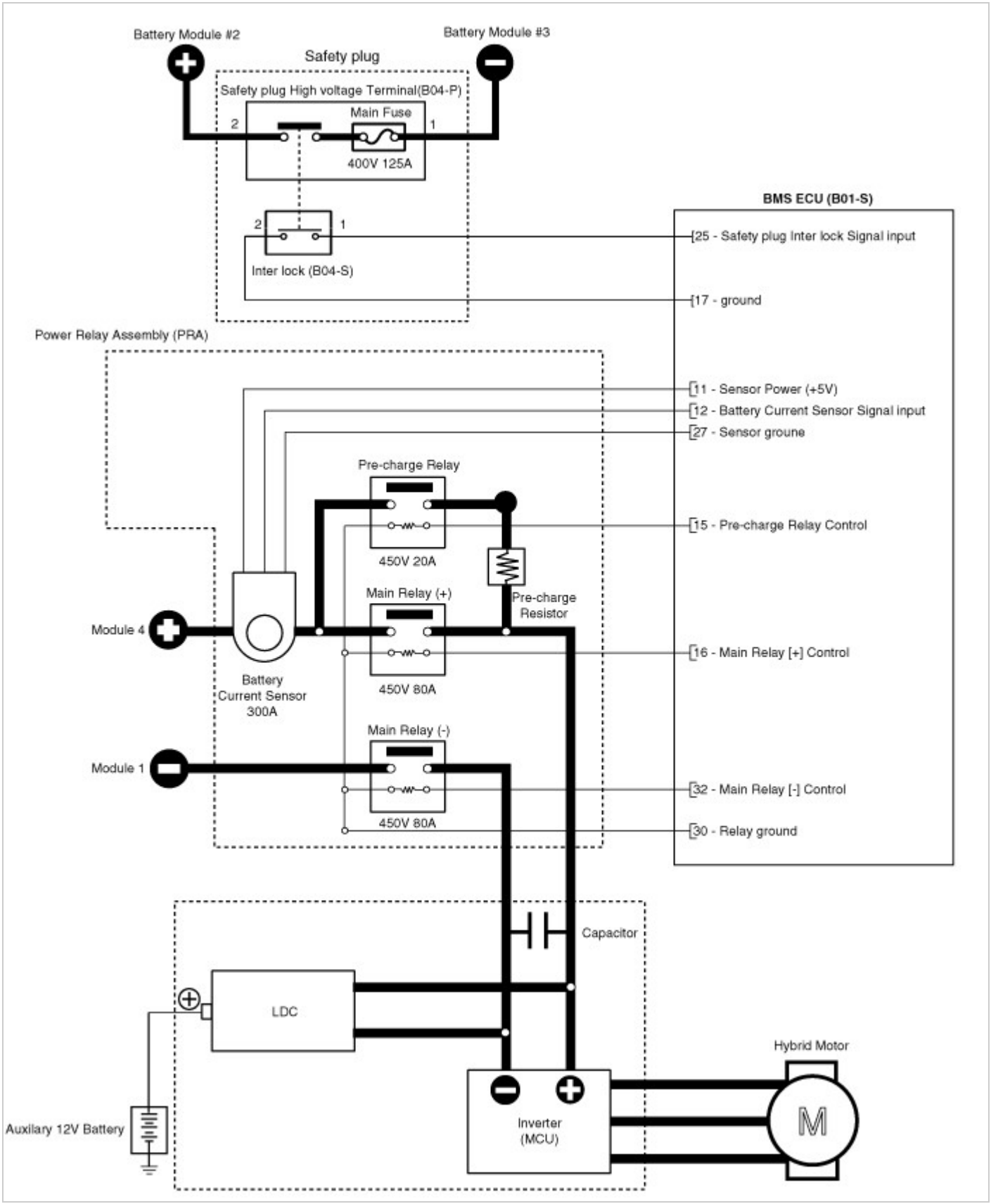

Hybrid Control System

Removal

1. Shut off the high voltage.
   (Refer to "High voltage Shut-off Procedures").
2. Remove the rear seat cushion.
   (Refer to Body - "Rear Seat Assembly")
3. Remove the rear door scuff trim.
   (Refer to Body - "Door Scuff Trim")
4. Remove the upper frame (A) after loosening the mounting bolts and nuts.

5. Remove the high voltage battery rear cover (A) after loosening the mounting bolts and nuts.

6. Remove the high voltage battery front cover (A) after loosening the mounting bolts and nuts.

7. Disconnect the BMS connector (A).
8. Remove the installation nut (B), then remove the BMS.

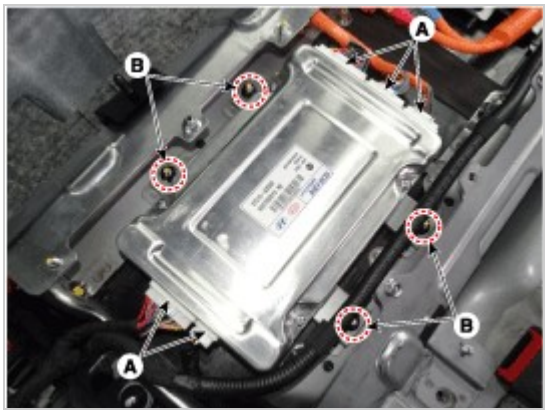

Installation

WARNING

- Be sure to read and follow the “General Safety Information and Caution” before doing any work related with the high voltage system. Failure to follow the safety instructions may result in serious electrical injuries.

1. Install the BMS ECU in the reverse order of removal.

High voltage battery rear and front cover installation bolt/nut:7.8 - 11.8N.m (0.8 - 1.2kgf.m, 5.8 - 8.7lb-ft)
BMS ECU installation nut:7.8 - 11.8N.m (0.8 - 1.2kgf.m, 5.8 - 8.7lb-ft)

Description

Safety Plug is installed on the rear side of the high voltage battery and it can mechanically shut the high voltage circuit off when servicing the high voltage system (i.e. High Voltage Battery, Power Relay Assembly, HPCU, BMS ECU, Hybrid Drive Motor, Inverter, HSG, LDC, Power Cable, etc.).

It includes a fuse in order to prevent the high voltage system from overcurrent.

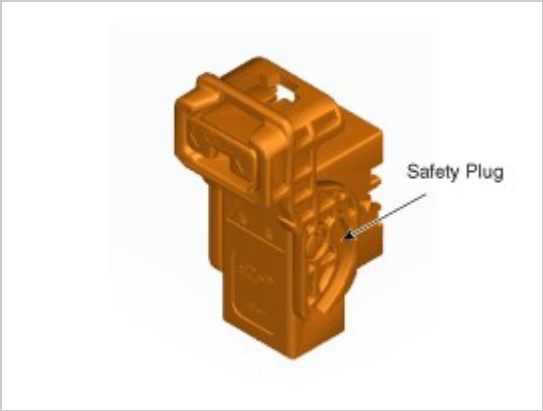

Specification

Item		Specification
Rated Voltage (V)		400
Rated Current (A)		80
Fuse Rated Current (A)		125
FuseMeltingTime	Rated Current × 110%	Min. 4 hr
	Rated Current × 200%	5 - 100 sec
	Rated Current × 300%	0.5 - 15 sec
	Rated Current × 500%	Max. 1 sec

Circuit Diagram

[Circuit Diagram]

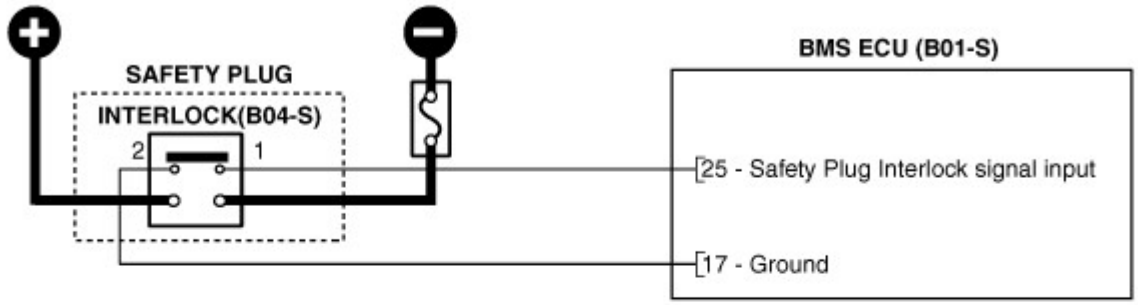

[Connection Information]

Terminal	Connected to	Function
1	BMS ECU B01-S (25)	Safety Plug Interlock signal input
2	BMS ECU B01-S (17)	Ground

[Harness Connector]

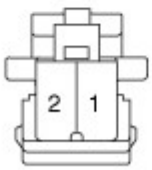

B04-S
INTERLOCK

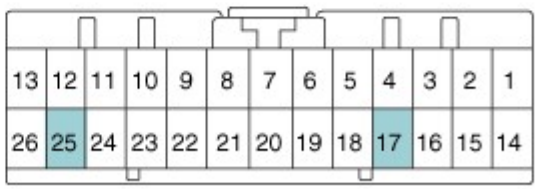

B01-S
BMS ECU

Removal

1. Turn the ignition switch OFF and disconnect the auxiliary 12V battery negative (-) terminal.
2. Remove the safety plug cover (A).

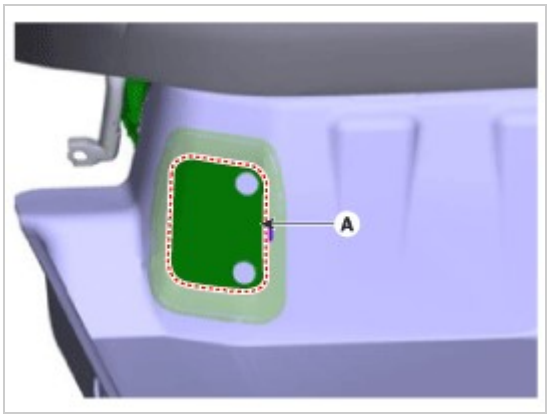

3. Unfasten the hook (A) and then remove the safety plug (C) by pulling the lever (B) to the direction of arrow.

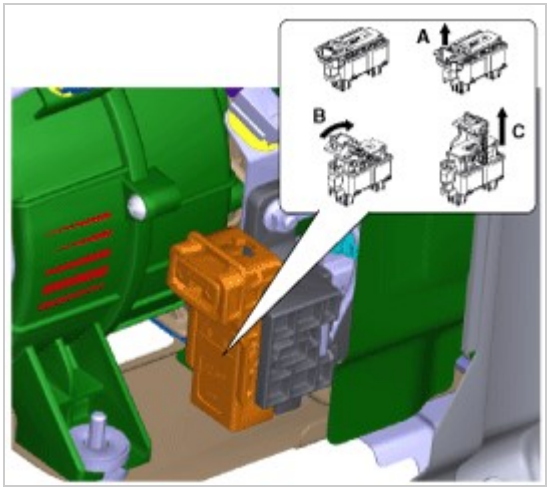

Installation

WARNING

- Be sure to read and follow the “General Safety Information and Caution” before doing any work related with the high voltage system. Failure to follow the safety instructions may result in serious electrical injuries.

1. Install the Safety Plug in the reverse order of removal.

Hybrid Control System

Description

The Power Relay Assembly (PRA) consists of the positive and negative main relays, pre-charge relay, pre-charge resistor and battery current sensor. It is located inside the battery pack assembly and controls the high voltage power circuit between the high voltage battery and inverter by the control signal of BMS ECU.

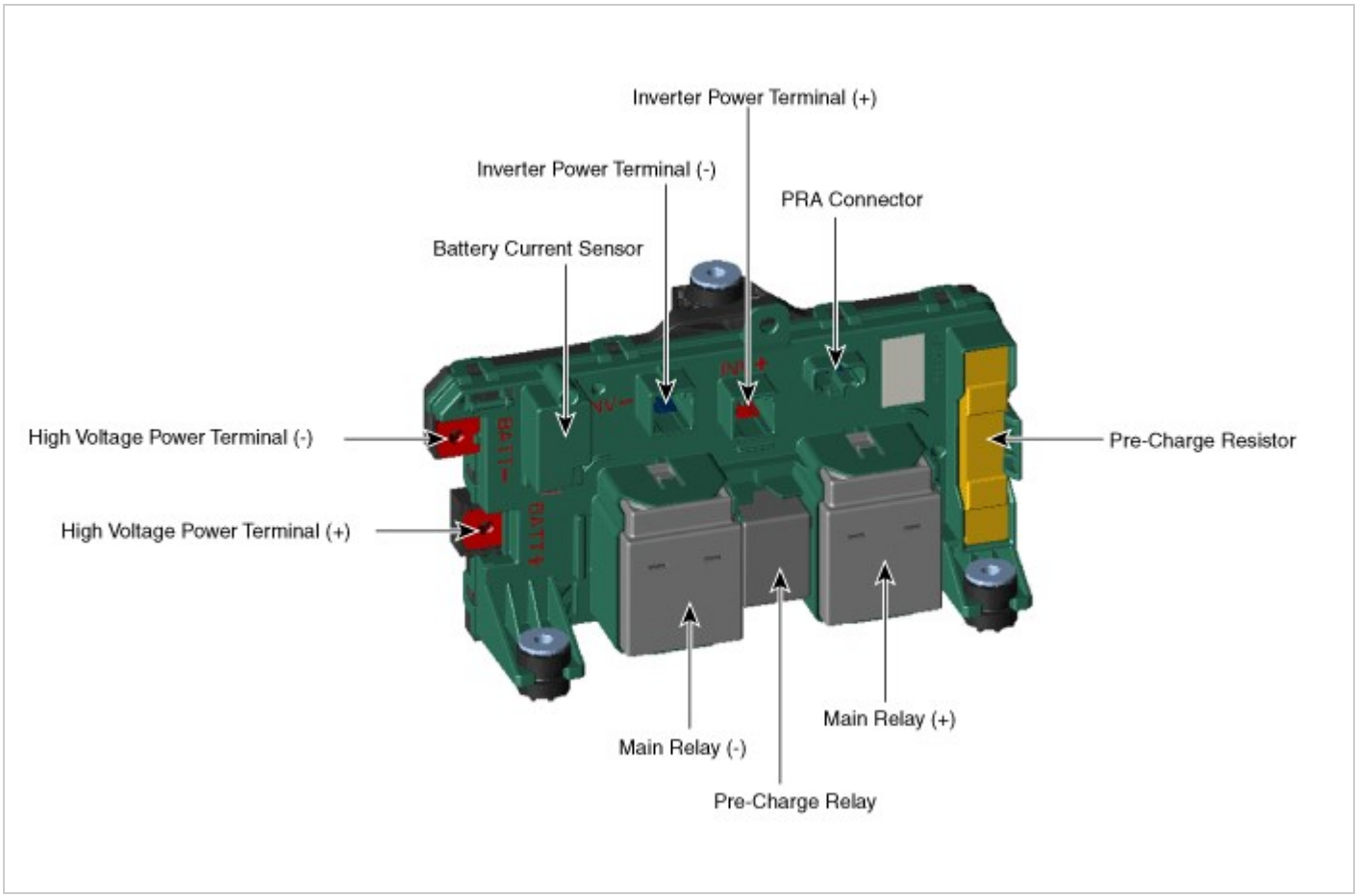

[PRA Operation Sequence]

IG START

① Pre-Charge Relay ON ⇨ ② Main Relay (-) ON ⇨ ③ Capacitor charged ⇨ ④ Main Relay (+) ON ⇨ ⑤ Pre-Charge Relay OFF

IG OFF

① Main Relay (+)(-) OFF

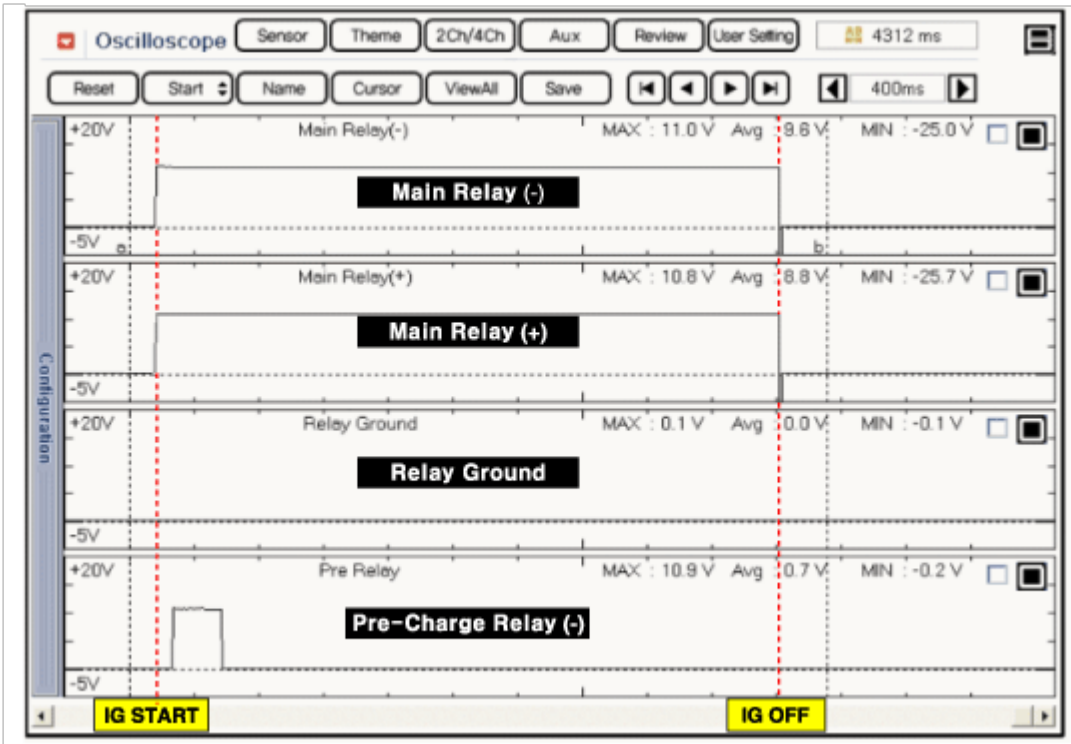

Hybrid Control System

Specification

Item		Specification
Contact	Rated Voltage (V)	450
	Rated Current (A)	80
Coil	Operating Voltage (V)	12
	Resistance (Ω)	29.7 - 36.3[20°C (68°F)]

Hybrid Control System

Circuit Diagram

[Circuit Diagram]

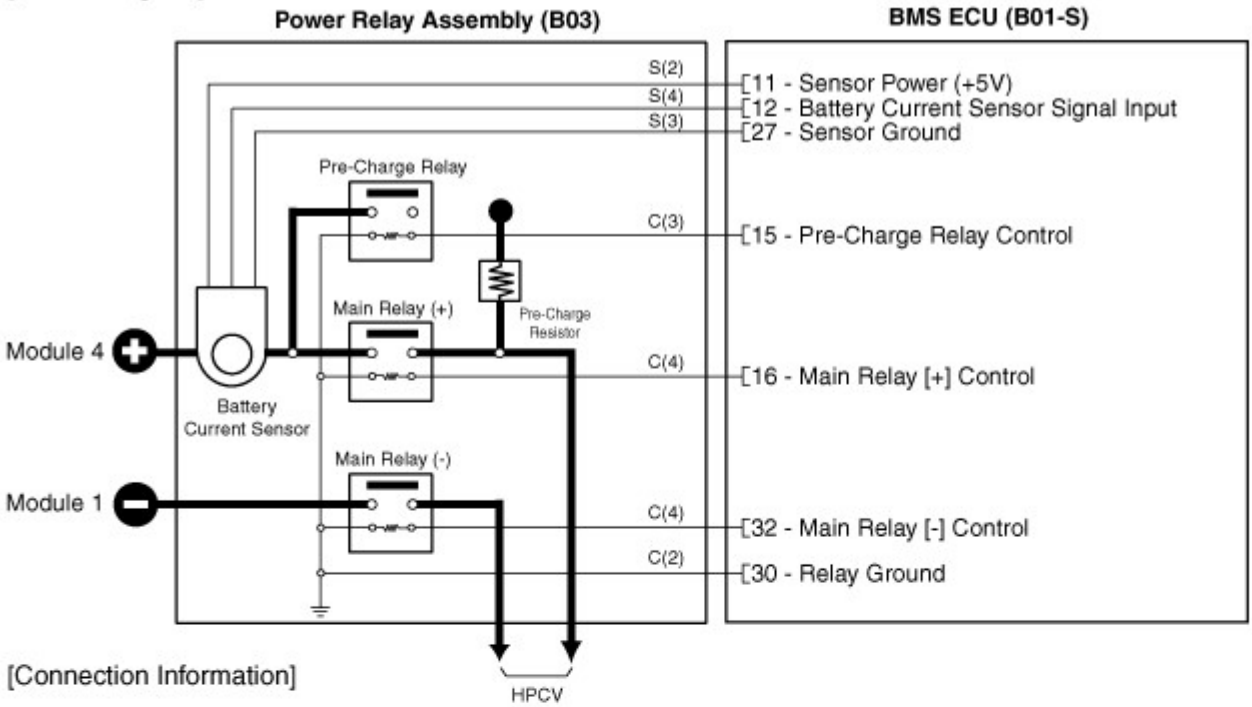

[Connection Information]

Power Relay Assembly [B03-C]

Terminal	Connected to	Function
1	BMS ECU B01-S (16)	Main Relay [+] Control
2	BMS ECU B01-S (30)	Relay Ground
3	BMS ECU B01-S (15)	Pre-Charge Relay Control
4	BMS ECU B01-S (32)	Main Relay [-] Control

Power Relay Assembly [B03-S]

Terminal	Connected to	Function
1	-	-
2	BMS ECU B01-S (11)	Sensor Power (+5V)
3	BMS ECU B01-S (27)	Sensor Ground
4	BMS ECU B01-S (12)	Battery Current Sensor Signal Input

[Harness Connector]

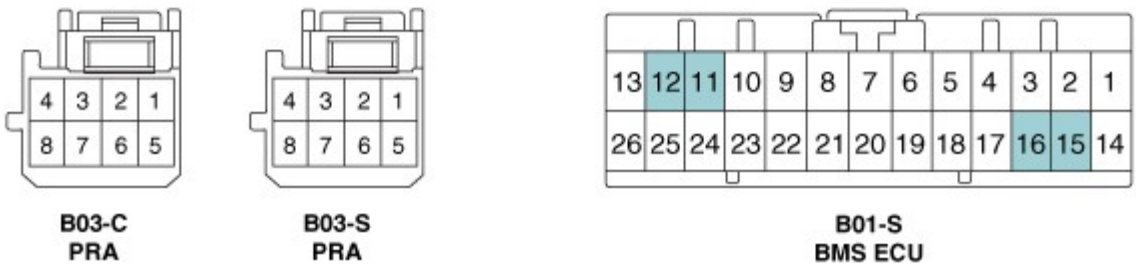

Hybrid Control System

Removal

WARNING

- Be sure to read and follow the “General Safety Information and Caution” before doing any work related with the high voltage system. Failure to follow the safety instructions may result in serious electrical injuries.

1. Shut off the high voltage.
   (Refer to "High voltage Shut-off Procedures").
2. Remove the rear seat cushion.
   (Refer to Body - "Rear Seat Assembly")
3. Remove the rear door scuff trim.
   (Refer to Body - "Door Scuff Trim")

4. Remove the upper frame (A) after loosening the mounting bolts and nuts.

5. Remove the high voltage battery rear cover (A) after loosening the mounting bolts and nuts.

6. Remove the inlet cooling duct.
   (Refer to Hybrid Control System - "Cooling Duct")
7. Disconnect the battery (+) cable connector (A).
8. Remove the battery (+) cable assembly (B) after loosening the nuts.

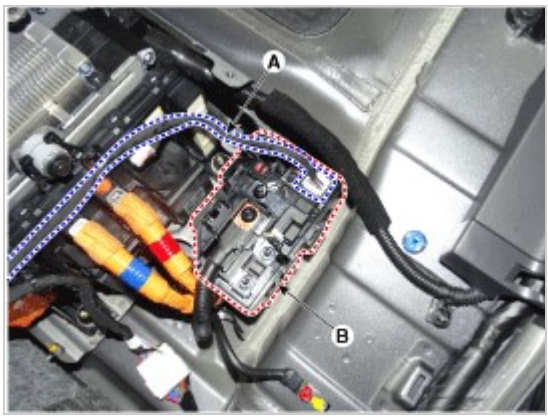

9. Disconnect the main relay (+) (A), and main relay (-) (B).

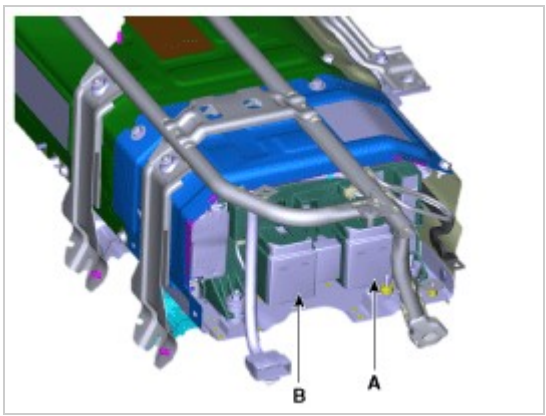

Installation

WARNING

- Be sure to read and follow the “General Safety Information and Caution” before doing any work related with the high voltage system. Failure to follow the safety instructions may result in serious electrical injuries.

1. Install the main relay in the reverse order of removal.

High voltage battery top cover installation bolt/nut:7.8 - 11.8N.m (0.8 - 1.2kgf.m, 5.8 - 8.7lb-ft)

Inspection

WARNING

- Be sure to read and follow the “General Safety Information and Caution” before doing any work related with the high voltage system. Failure to follow the safety instructions may result in serious electrical injuries.

Checking for Welding in the High Voltage Main Relay

[Using GDS service data to check for main relay weld damage]

1. Connect the GDS to the Data Link Connector (DLC).
2. Turn the ignition switch ON.
3. Check the BMS weld damage state in the GDS service data.

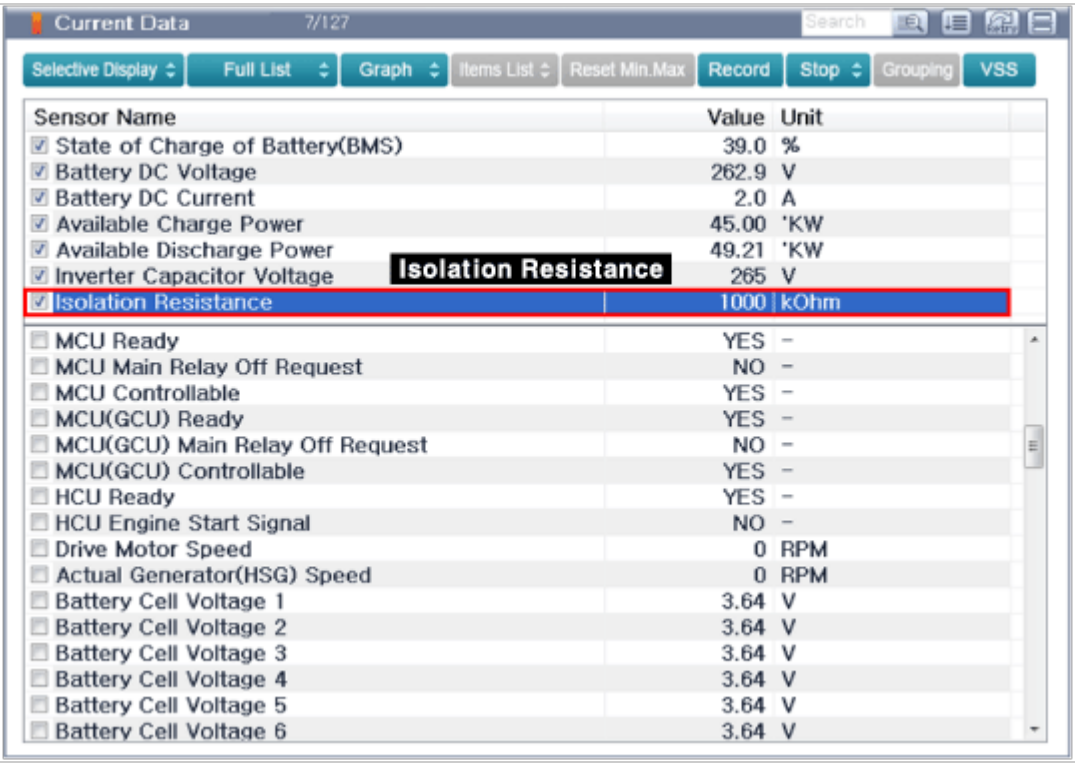

Sensor Name	Value	Unit
State of Charge of Battery(BMS)	39.0	%
Battery DC Voltage	262.9	V
Battery DC Current	2.0	A
Available Charge Power	45.00	'KW
Available Discharge Power	49.21	'KW
Inverter Capacitor Voltage	265	V
Isolation Resistance	1000	kOhm
MCU Ready	YES	-
MCU Main Relay Off Request	NO	-
MCU Controllable	YES	-
MCU(GCU) Ready	YES	-
MCU(GCU) Main Relay Off Request	NO	-
MCU(GCU) Controllable	YES	-
HCU Ready	YES	-
HCU Engine Start Signal	NO	-
Drive Motor Speed	0	RPM
Actual Generator(HSG) Speed	0	RPM
Battery Cell Voltage 1	3.64	V
Battery Cell Voltage 2	3.64	V
Battery Cell Voltage 3	3.64	V
Battery Cell Voltage 4	3.64	V
Battery Cell Voltage 5	3.64	V
Battery Cell Voltage 6	3.64	V

[Using a Multimeter to measure weld damage]

1. Shut off the high voltage.
   (Refer to "High Voltage Shut-off Procedures")
2. Remove the high voltage battery rear cover.
   (Refer to "High Voltage Battery System - "Case")
3. Remove the inlet cooling duct.
   (Refer to Hybrid Control System - "Cooling Duct")
4. Measure the high voltage main relay resistance and check for signs of weld damage.

   Specification :∞Ω[20°C(68°F)]

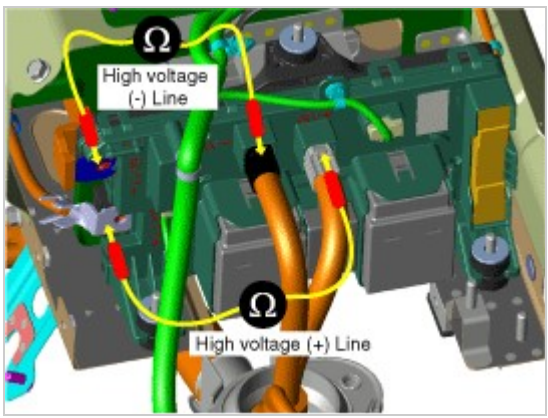

High voltage main relay (-) switch resistance

1. Shut off the high voltage.

(Refer to "High Voltage Shut-off Procedures")

2. Remove the high voltage battery rear cover.
   (Refer to "High Voltage Battery System - "Case")
3. Remove the inlet cooling duct.
   (Refer to Hybrid Control System - "Cooling Duct")
4. Measure the resistance between the high voltage power terminal (-) and the inverter power terminal (-).

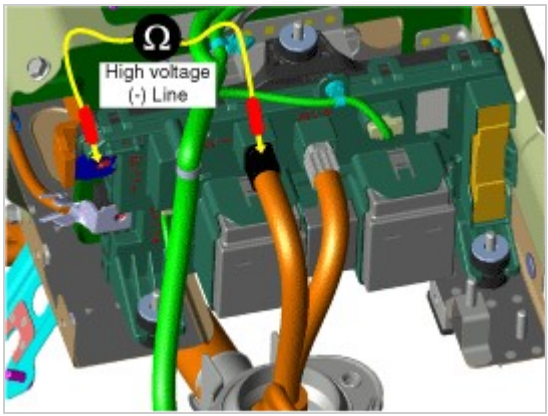

[Circuit inspection (Relay ON)

> **Information**
> • Inspect the high voltage main relay (-) activated by GDS.

1. Connect the GDS to the Data Link Connector (DLC).
2. Turn the ignition switch ON.
3. Activate the main relay by using "Actuation Test" on the GDS as shown in the illustration below.

> **Information**
> • When the relay is ON, there is a relay operation sound.

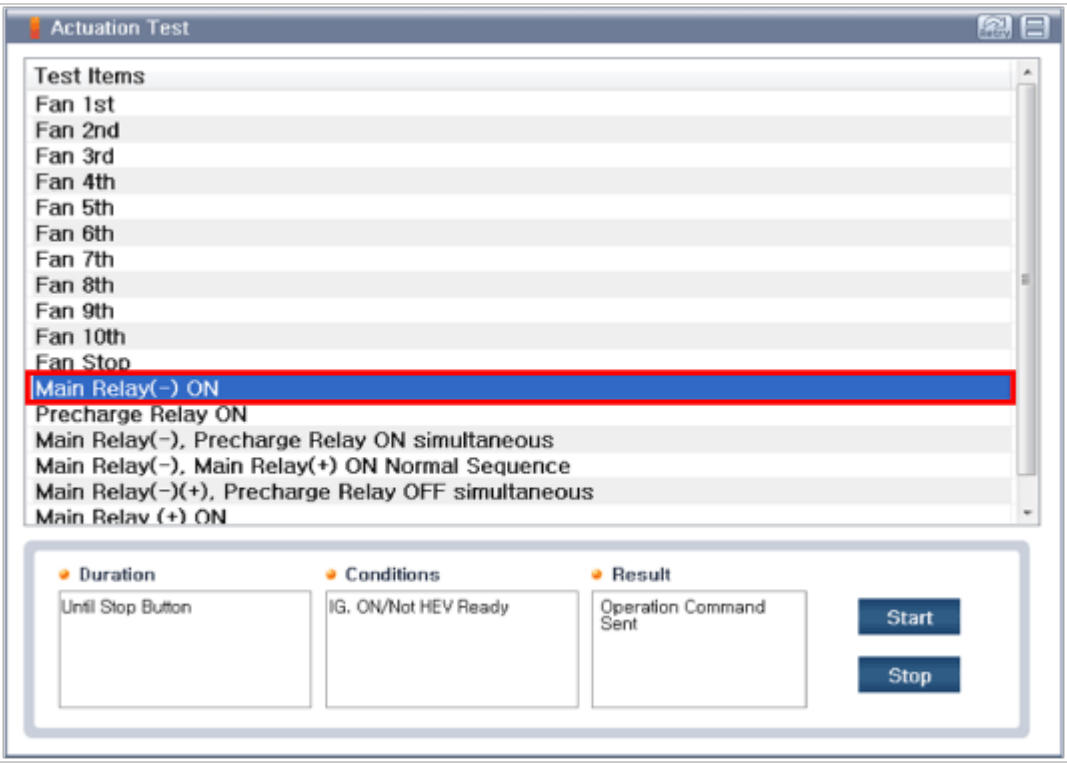

High Voltage Main Relay Coil Resistance

1. Shut off the high voltage.
   (Refer to "High Voltage Shut-off Procedures")
2. Remove the power relay assembly.
   (High Battery System - "Power Relay Assembly")
3. Check for continuity between the terminals using an ohmmeter.

Description

The Power Relay Assembly (PRA) consists of the positive and negative main relays, pre-charge relay, pre-charge resistor and battery current sensor. It is located inside the battery pack assembly and controls the high voltage power circuit between the high voltage battery and inverter by the control signal of BMS ECU.

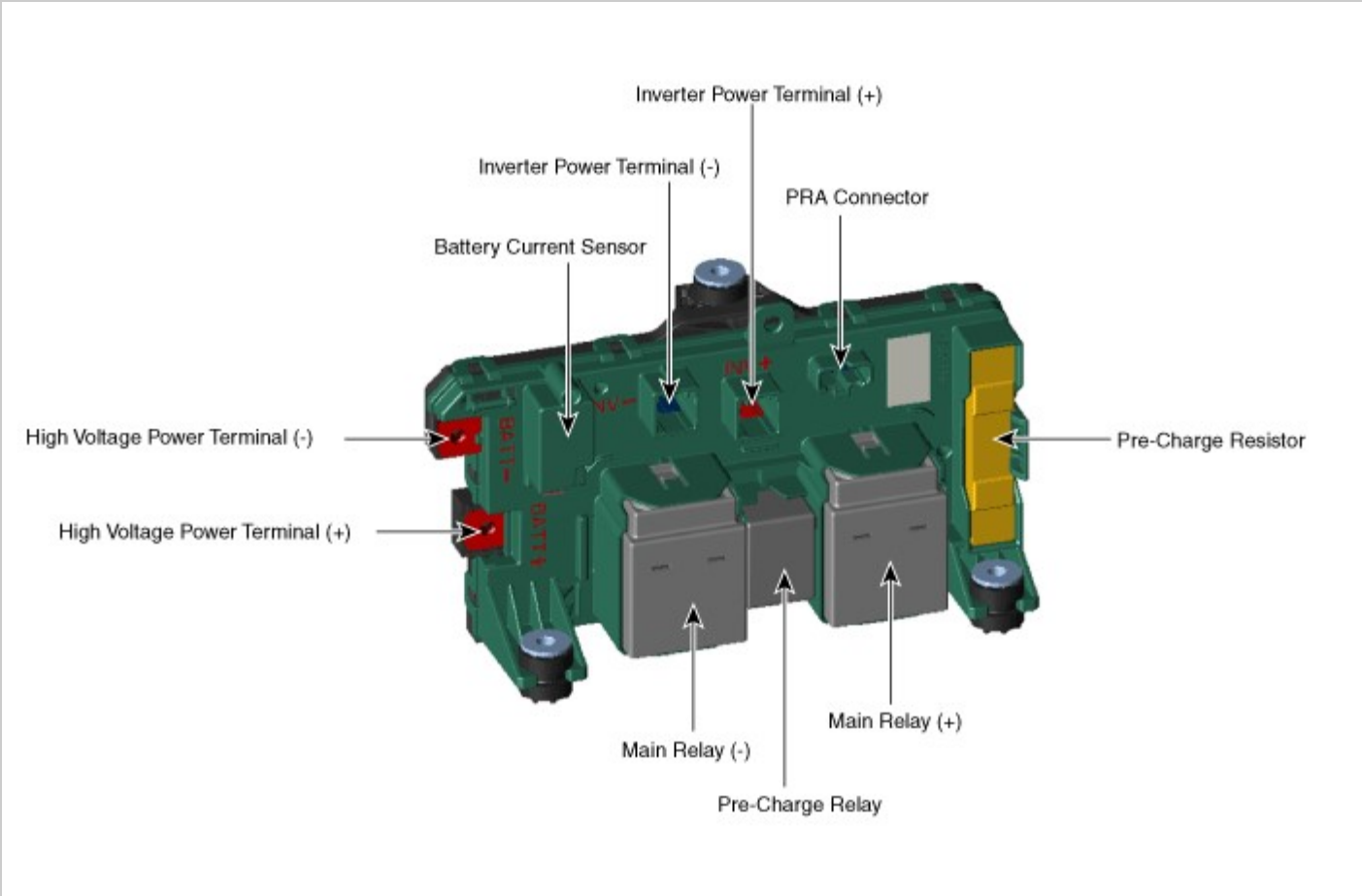

[PRA Operation Sequence]

IG START

① Pre-Charge Relay ON ⇨ ② Main Relay (-) ON ⇨ ③ Capacitor charged ⇨ ④ Main Relay (+) ON ⇨ ⑤ Pre-Charge Relay OFF

IG OFF

① Main Relay (+)(-) OFF

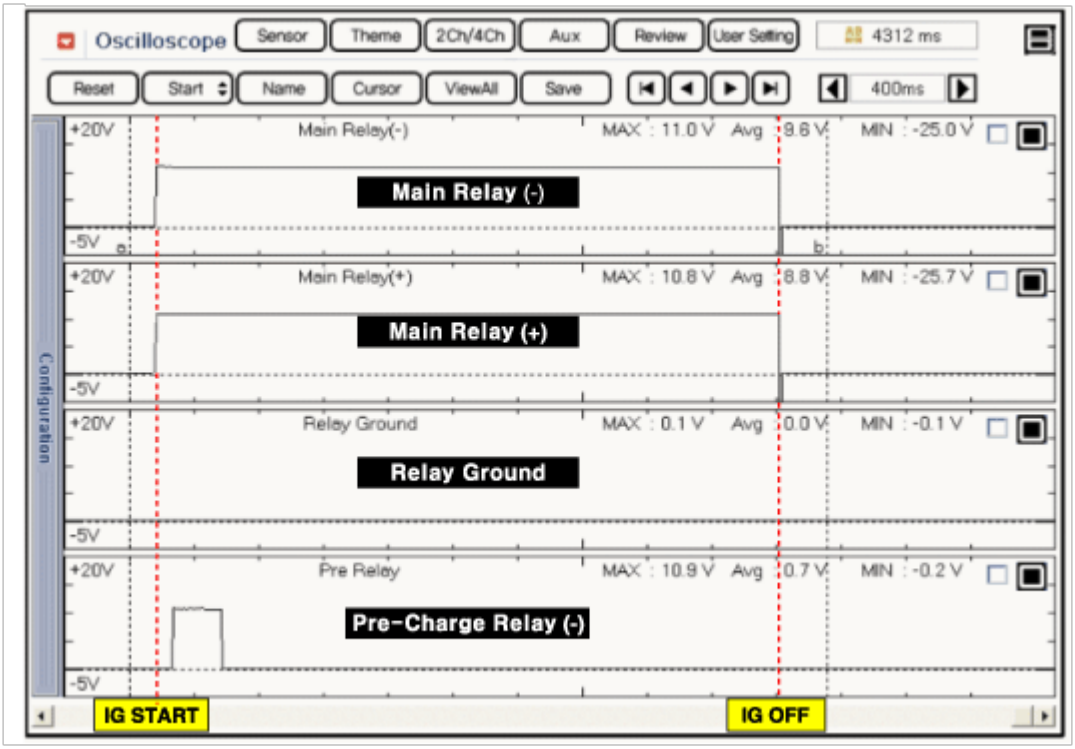

Hybrid Control System

Specification

Item		Specification
Contact	Rated Voltage (V)	450
	Rated Current (A)	20
Coil	Operating Voltage (V)	12
	Resistance (Ω)	59.4 - 72.6[20°C (68°F)]

Hybrid Control System

Circuit Diagram

[Circuit Diagram]

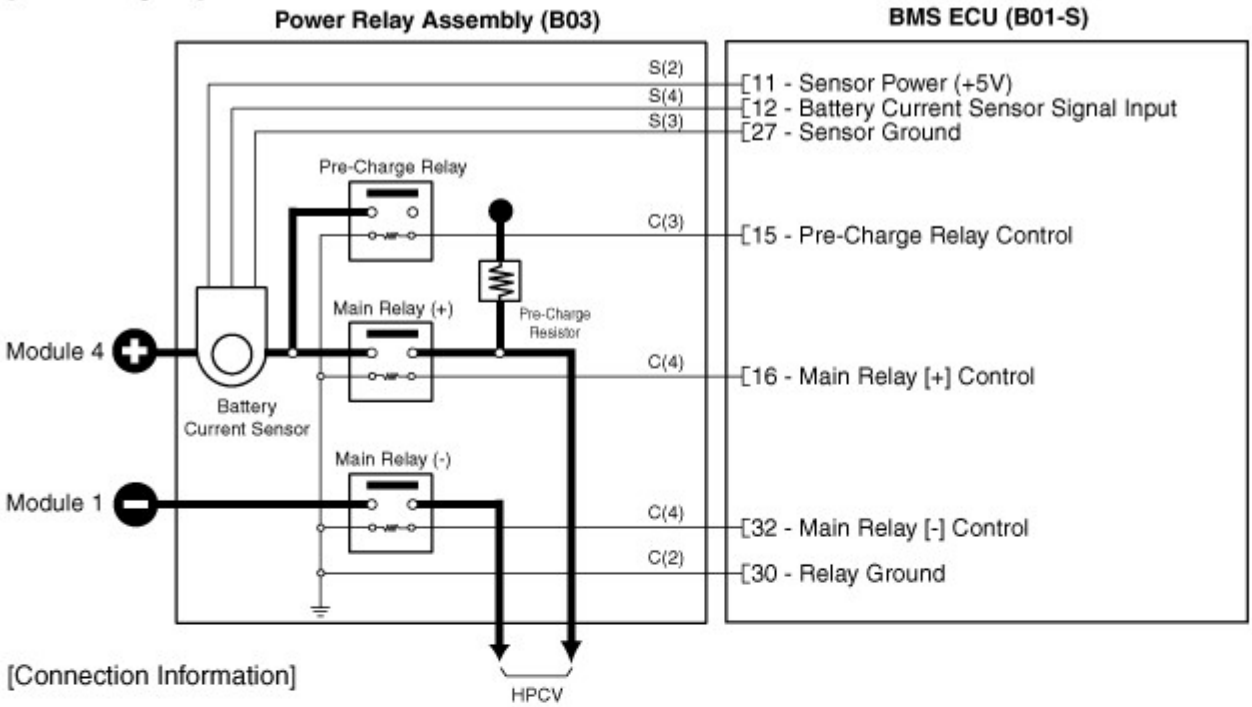

[Connection Information]

Power Relay Assembly [B03-C]

Terminal	Connected to	Function
1	BMS ECU B01-S (16)	Main Relay [+] Control
2	BMS ECU B01-S (30)	Relay Ground
3	BMS ECU B01-S (15)	Pre-Charge Relay Control
4	BMS ECU B01-S (32)	Main Relay [-] Control

Power Relay Assembly [B03-S]

Terminal	Connected to	Function
1	-	-
2	BMS ECU B01-S (11)	Sensor Power (+5V)
3	BMS ECU B01-S (27)	Sensor Ground
4	BMS ECU B01-S (12)	Battery Current Sensor Signal Input

[Harness Connector]

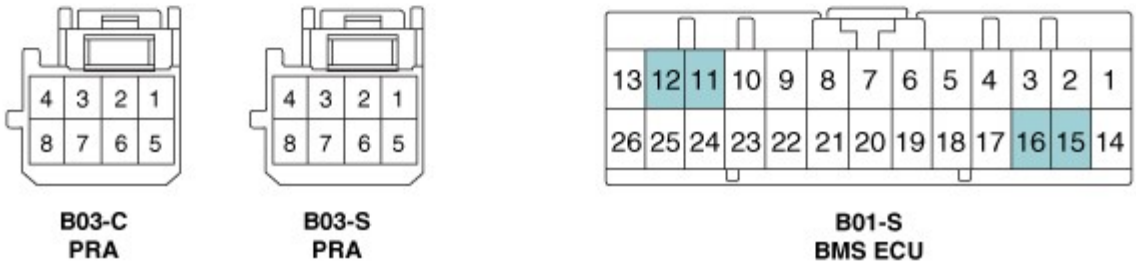

Removal

1. Shut off the high voltage.
   (Refer to "High voltage Shut-off Procedures").
2. Remove the rear seat cushion.
   (Refer to Body - "Rear Seat Assembly")
3. Remove the rear door scuff trim.
   (Refer to Body - "Door Scuff Trim")
4. Remove the upper frame (A) after loosening the mounting bolts and nuts.

5. Remove the high voltage battery rear cover (A) after loosening the mounting bolts and nuts.

6. Remove the inlet cooling duct.
   (Refer to Hybrid Control System - "Cooling Duct")
7. Disconnect the pre-charge relay (A).

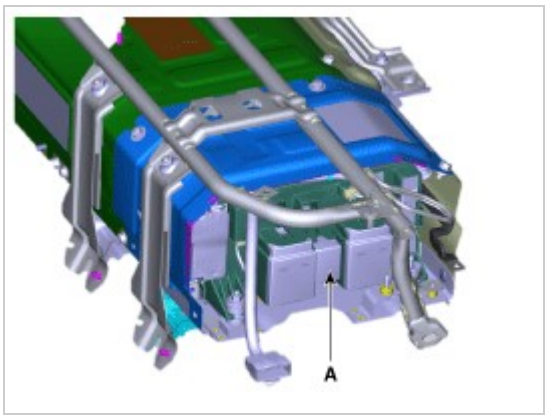

Installation

WARNING

- Be sure to read and follow the “General Safety Information and Caution” before doing any work related with the high voltage system. Failure to follow the safety instructions may result in serious electrical injuries.

1. Install the pre-charge relay in the reverse order of removal.
   High voltage battery rear cover installation bolt/nut:7.8 - 11.8N.m (0.8 - 1.2kgf.m, 5.8 - 8.7lb-ft)

Inspection

WARNING

- Be sure to read and follow the “General Safety Information and Caution” before doing any work related with the high voltage system. Failure to follow the safety instructions may result in serious electrical injuries.

1. Remove the power relay assembly.
   (High Battery System - "Power Relay Assembly")
2. Measure the resistance between the PRA connector terminals #6 and #5.

   Specification : Refer to "Specification"

High voltage pre charge relay switch resistance

[Use multi tester (relay OFF)]

1. Shut off the high voltage.
   (Refer to "High Voltage Shut-off Procedures")
2. Remove the high voltage battery rear cover.
   (Refer to "High Voltage Battery System - "Case")
3. Remove the inlet cooling duct.
   (Refer to Hybrid Control System - "Cooling Duct")
4. Measure the resistance between the high voltage power terminal (+) and the inverter power terminal (+).

   Specification :∞Ω[20°C(68°F)]

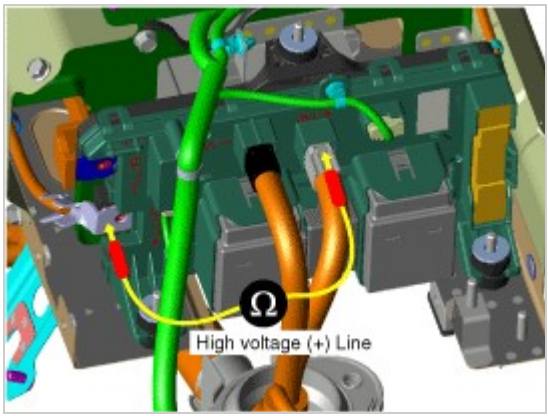

[GDS - relay ON]

1. Connect the GDS to the Data Link Connector (DLC).
2. Turn the ignition switch ON.
3. Activate the pre-charge relay by using "Actuation Test" on the GDS as shown in the illustration below.

Information

- When the relay is ON, there is a relay operation sound.

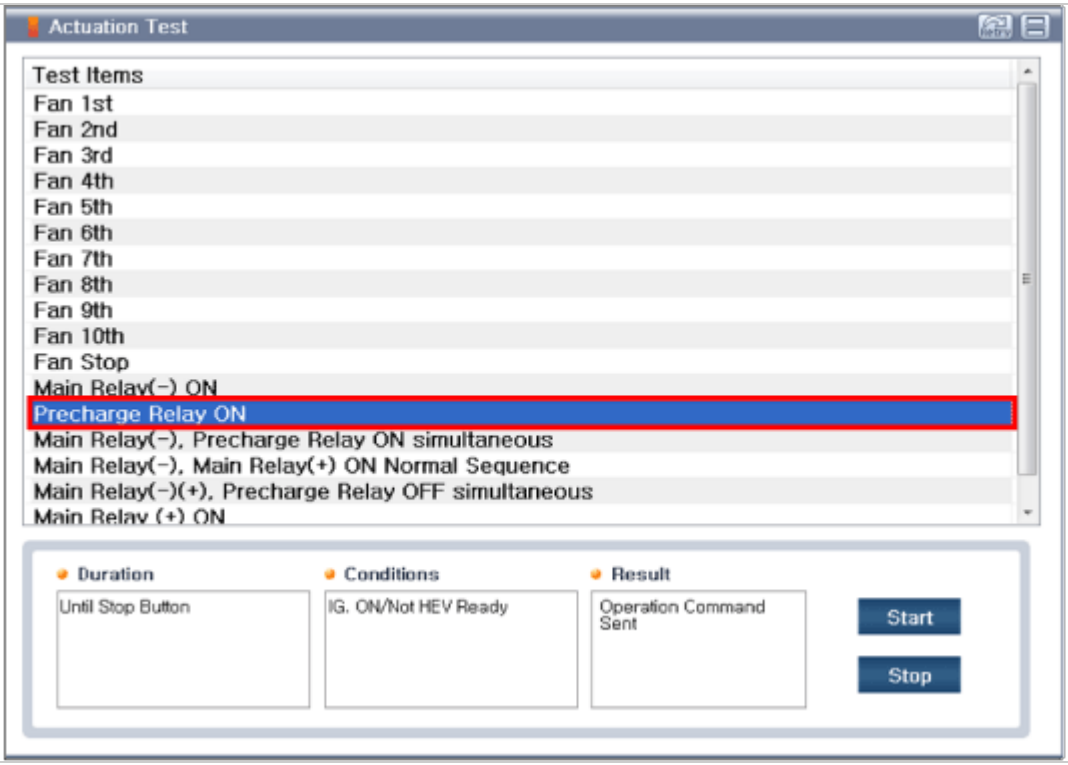

High Voltage Per-Charge Relay Coil Resistance

1. Shut off the high voltage.
   (Refer to "High Voltage Shut-off Procedures")
2. Remove the power relay assembly.
   (High Battery System - "Power Relay Assembly")
3. Check for continuity between the terminals using an ohmmeter.

Hybrid Control System

Description

Pre-Charge Resistor is integrated into the Power Relay Assembly (PRA). It protects the high voltage circuit by limiting the current while the inverter capacitor is being charged.

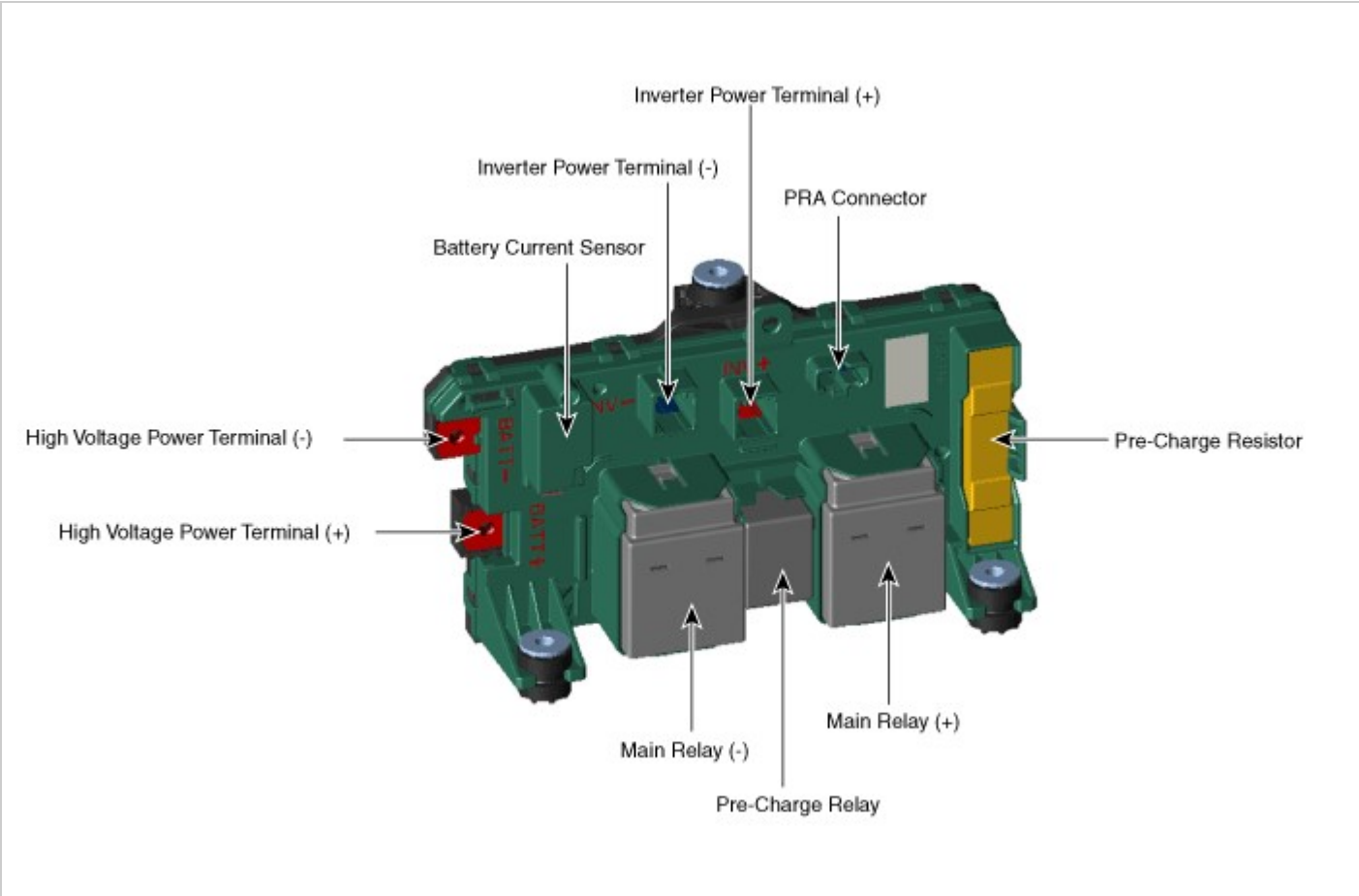

Hybrid Control System

Specification

Item	Specification
Resistance (Ω)	40 [20°C (68°F)]
Rated Current (A)	40

Hybrid Control System

Circuit Diagram

[Circuit Diagram]

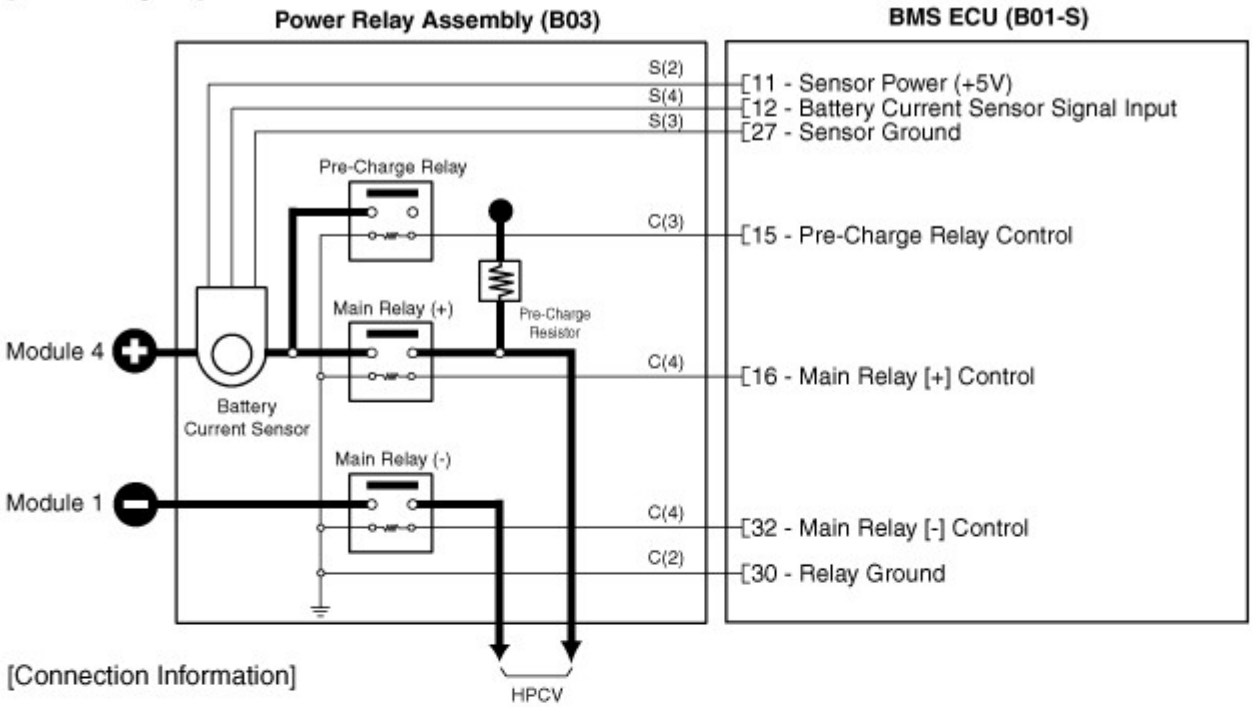

[Connection Information]

Power Relay Assembly [B03-C]

Terminal	Connected to	Function
1	BMS ECU B01-S (16)	Main Relay [+] Control
2	BMS ECU B01-S (30)	Relay Ground
3	BMS ECU B01-S (15)	Pre-Charge Relay Control
4	BMS ECU B01-S (32)	Main Relay [-] Control

Power Relay Assembly [B03-S]

Terminal	Connected to	Function
1	-	-
2	BMS ECU B01-S (11)	Sensor Power (+5V)
3	BMS ECU B01-S (27)	Sensor Ground
4	BMS ECU B01-S (12)	Battery Current Sensor Signal Input

[Harness Connector]

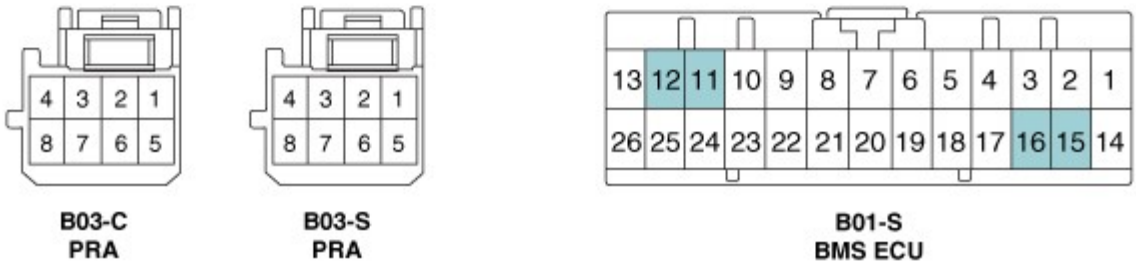

Removal

1. Shut off the high voltage.
   (Refer to "High voltage Shut-off Procedures").
2. Remove the rear seat cushion.
   (Refer to Body - "Rear Seat Assembly")
3. Remove the rear door scuff trim.
   (Refer to Body - "Door Scuff Trim")
4. Remove the upper frame (A) after loosening the mounting bolts and nuts.

5. Remove the high voltage battery rear cover (A) after loosening the mounting bolts and nuts.

6. Remove the inlet cooling duct.
   (Refer to Hybrid Control System - "Cooling Duct")
7. Disconnect the pre-charge resistor (A).

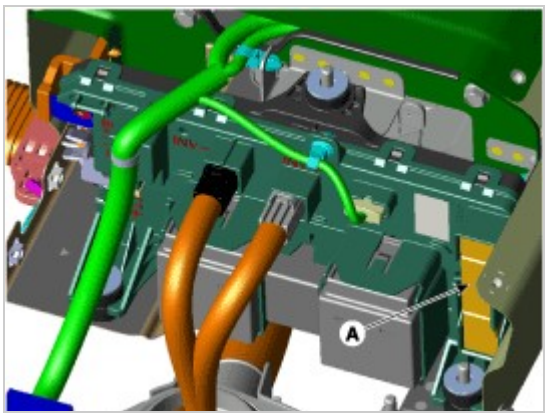

Installation

WARNING

- Be sure to read and follow the “General Safety Information and Caution” before doing any work related with the high voltage system. Failure to follow the safety instructions may result in serious electrical injuries.

1. Install in the reverse order of removal.

high voltage battery rear cover installation bolt/nut :7.8 - 11.8N.m (0.8 - 1.2kgf.m, 5.8 - 8.7lb-ft)

Inspection

1. Remove the pre-charge resistor.
   (Refer to High Voltage Battery Control System - "Pre-Charge Resistor")
2. Check for continuity between the terminals using an ohmmeter.

Specification :40Ω[20°C(68°F)]

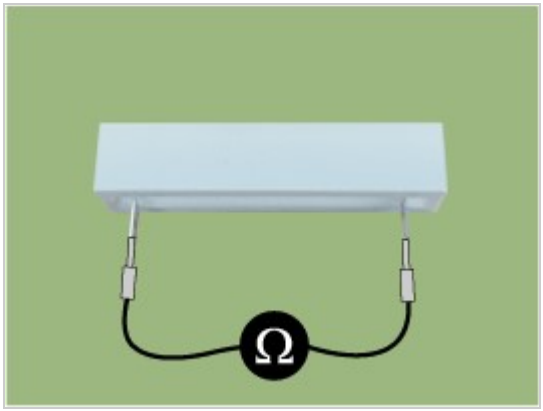

Hybrid Control System

Description

Battery Current Sensor is integrated into the Power Relay Assembly (PRA) and measures the current of the high voltage battery during charging or discharging.

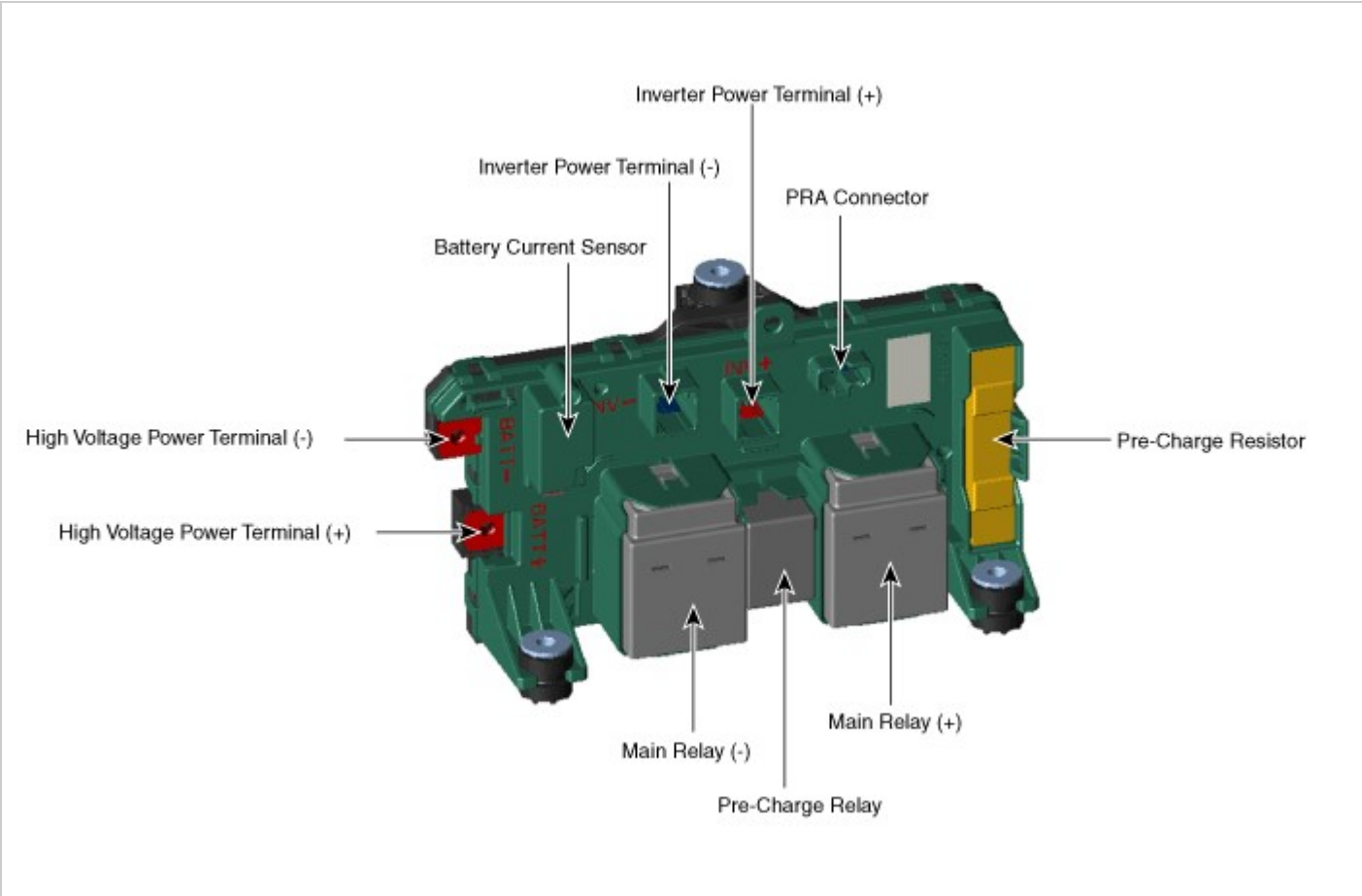

Hybrid Control System

Specification

Current (A)	Output Voltage (V)
-300(Charge)	0.5
0	2.5
+300(Discharge)	4.5

Hybrid Control System

Circuit Diagram

[Circuit Diagram]

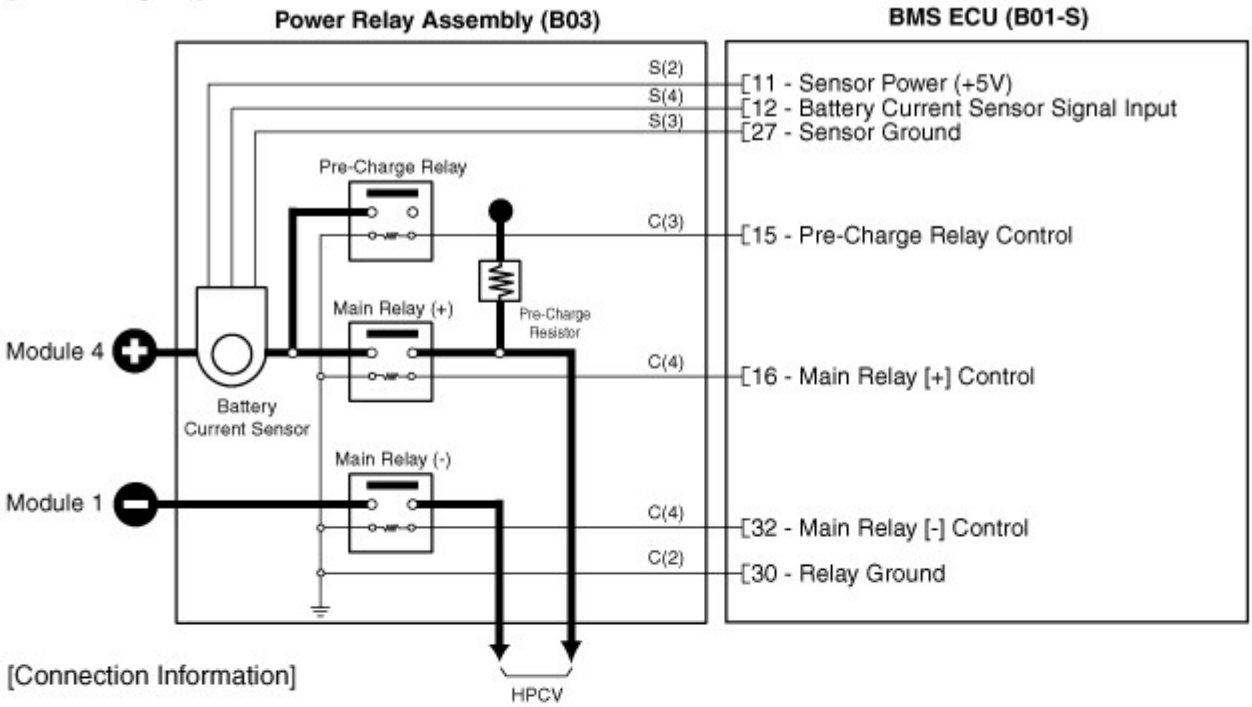

[Connection Information]

Power Relay Assembly [B03-C]

Terminal	Connected to	Function
1	BMS ECU B01-S (16)	Main Relay [+] Control
2	BMS ECU B01-S (30)	Relay Ground
3	BMS ECU B01-S (15)	Pre-Charge Relay Control
4	BMS ECU B01-S (32)	Main Relay [-] Control

Power Relay Assembly [B03-S]

Terminal	Connected to	Function
1	-	-
2	BMS ECU B01-S (11)	Sensor Power (+5V)
3	BMS ECU B01-S (27)	Sensor Ground
4	BMS ECU B01-S (12)	Battery Current Sensor Signal Input

[Harness Connector]

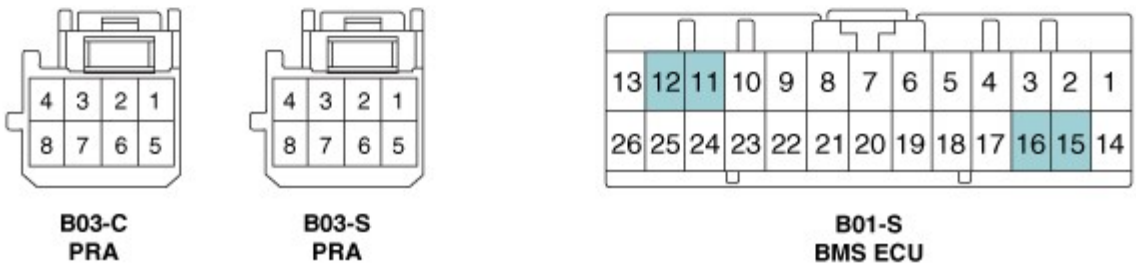

Removal

WARNING

- Be sure to read and follow the “General Safety Information and Caution” before doing any work related with the high voltage system. Failure to follow the safety instructions may result in serious electrical injuries.

NOTICE

- Battery Current Sensor are integrated into the PRA which can’t be disassembled. So refer to “Power Relay Assembly (PRA)” for removal or installation procedure.

Installation

WARNING

- Be sure to read and follow the “General Safety Information and Caution” before doing any work related with the high voltage system. Failure to follow the safety instructions may result in serious electrical injuries.

NOTICE

- Battery Current Sensor are integrated into the PRA which can’t be disassembled. So refer to “Power Relay Assembly (PRA)” for removal or installation procedure.

Inspection

WARNING

- Be sure to read and follow the “General Safety Information and Caution” before doing any work related with the high voltage system. Failure to follow the safety instructions may result in serious electrical injuries.

1. Connect the GDS to the Data Link Connector (DLC).
2. Turn the ignition switch ON.
3. Check the battery current in GDS service data.

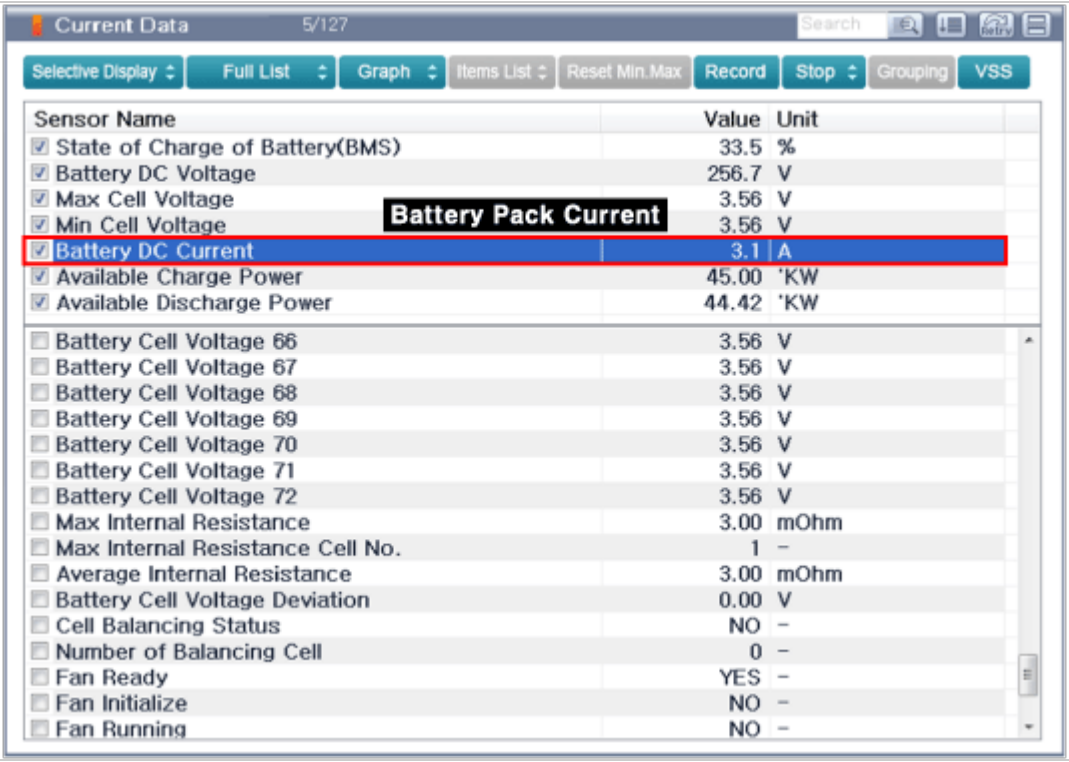

Sensor Name	Value	Unit
State of Charge of Battery(BMS)	33.5	%
Battery DC Voltage	256.7	V
Max Cell Voltage	3.56	V
Min Cell Voltage	3.56	V
Battery DC Current	3.1	A
Available Charge Power	45.00	*KW
Available Discharge Power	44.42	*KW
Battery Cell Voltage 66	3.56	V
Battery Cell Voltage 67	3.56	V
Battery Cell Voltage 68	3.56	V
Battery Cell Voltage 69	3.56	V
Battery Cell Voltage 70	3.56	V
Battery Cell Voltage 71	3.56	V
Battery Cell Voltage 72	3.56	V
Max Internal Resistance	3.00	mOhm
Max Internal Resistance Cell No.	1	-
Average Internal Resistance	3.00	mOhm
Battery Cell Voltage Deviation	0.00	V
Cell Balancing Status	NO	-
Number of Balancing Cell	0	-
Fan Ready	YES	-
Fan Initialize	NO	-
Fan Running	NO	-

Hybrid Control System

Description

The main fuse is mounted in the safety plug and protects the high voltage battery and high voltage circuits from overcurrent.

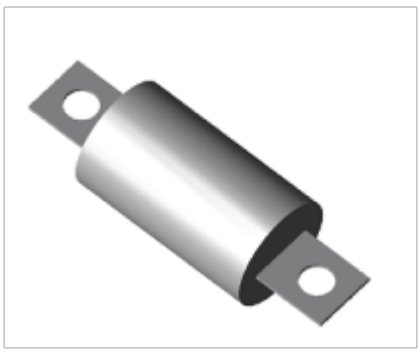

Hybrid Control System

Specification

Item	Value
Rated voltage (V)	400 (DC)

Rated current (A)	125 (DC)

Circuit Diagram

[Circuit Diagram]

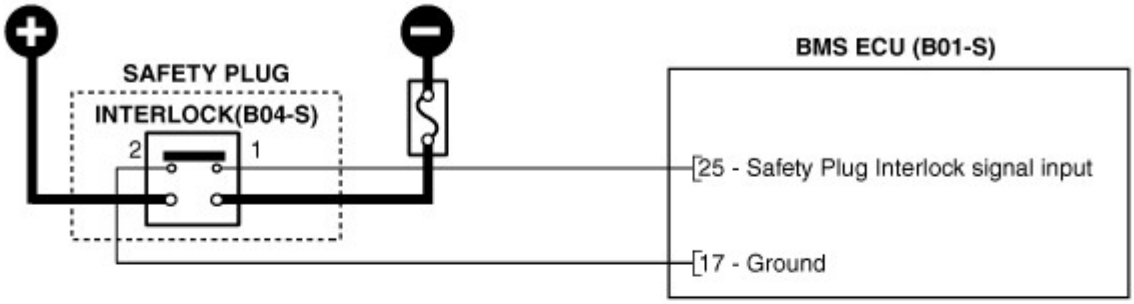

[Connection Information]

Terminal	Connected to	Function
1	BMS ECU B01-S (25)	Safety Plug Interlock signal input
2	BMS ECU B01-S (17)	Ground

[Harness Connector]

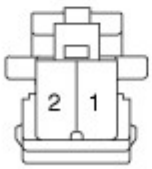

B04-S
INTERLOCK

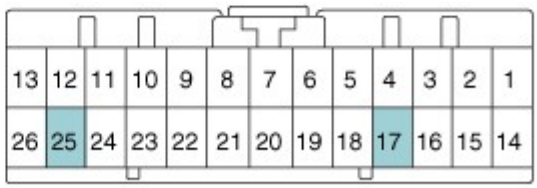

B01-S
BMS ECU

Removal

WARNING

- Be sure to read and follow the “General Safety Information and Caution” before doing any work related with the high voltage system. Failure to follow the safety instructions may result in serious electrical injuries.

1. Shut off the high voltage.
   (Refer to "High voltage Shut-off Procedures").
2. Remove the rear seat cushion.
   (Refer to Body - "Rear Seat Assembly")
3. Remove the rear door scuff trim.
   (Refer to Body - "Door Scuff Trim")
4. Remove the cover (A).

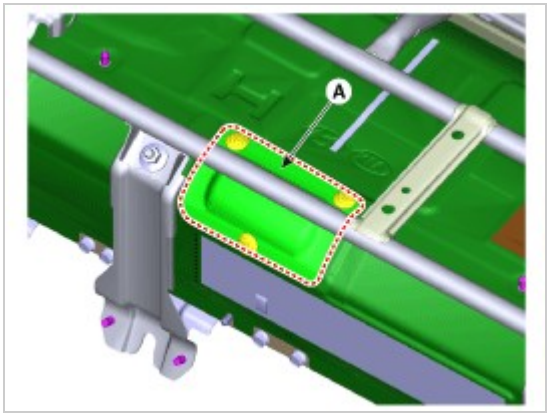

5. Remove the main fuse cover and then revmoing the main fuse (A).

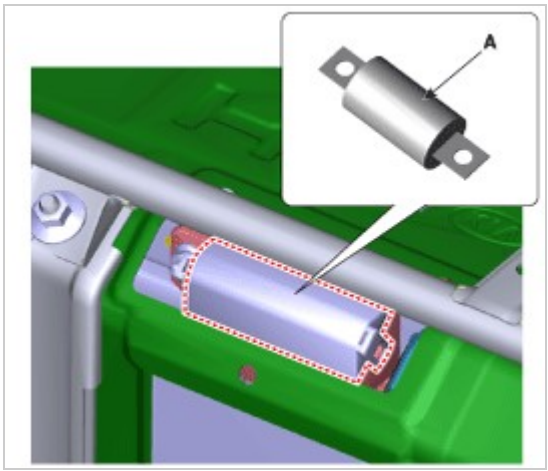

Installation

WARNING

- Be sure to read and follow the “General Safety Information and Caution” before doing any work related with the high voltage system. Failure to follow the safety instructions may result in serious electrical injuries.

1. Install the main fuse in the reverse order of removal.

CAUTION

- Be careful not to miss washers when installing the main fuse.

Inspection

1. Remove the main fuse. (Refer to High voltage battery control system - "Main fuse")
2. Check the continuity between ends of the main fuse.

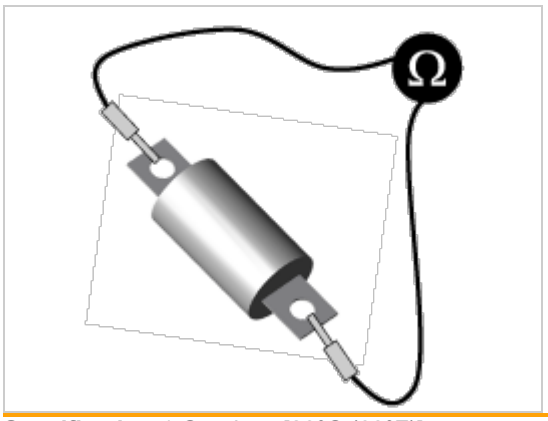

Specification:1 Ω or less [20°C (68°F)]

3. If the measured resistance is not within the spec value, then exchange the main fuse by following the maintenance guideline.

Hybrid Control System

Description

Battery Temperature Sensor is installed inside the high voltage battery pack assembly. It measures the temperature of the battery module 1, 4 and air inlet. In addition, it integrates the voltage sensing wiring for each module.

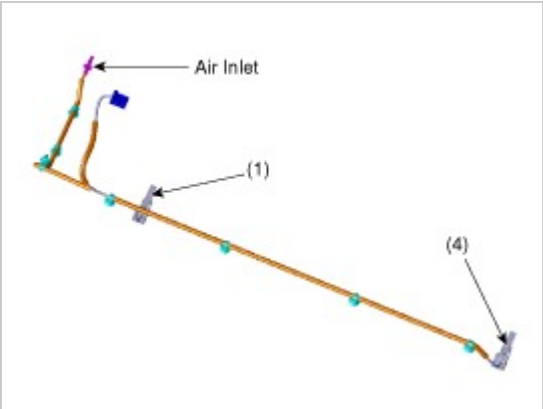

Hybrid Control System

Specification

[Air Inlet]

Temperature		Resistance (kΩ)
°C	°F	
-50	-58	314.9 - 344.6
-40	-40	181.1 - 196.0
-30	-22	107.5 - 115.2
-20	-4	65.82 - 69.77
-10	14	41.43 - 43.52
0	32	26.74 - 27.83
10	50	17.67 - 18.25
20	68	11.94 - 12.24
30	86	8.214 - 8.411
40	104	5.738 - 5.918
50	122	4.082 - 4.239
60	140	2.954 - 3.087
70	158	2.172 - 2.284
80	176	1.621 - 1.715
90	194	1.227 - 1.305
100	212	0.941 - 1.006
110	230	0.731 - 0.785

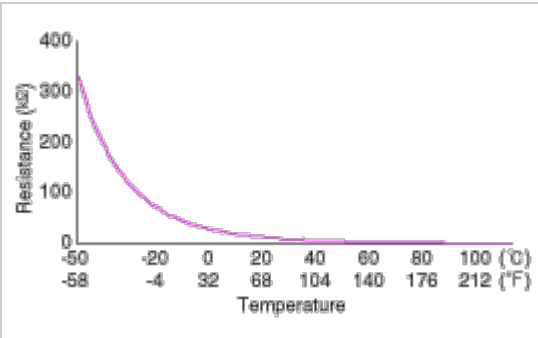

[Cell]

Temperature		Resistance (kΩ)
°C	°F	
-50	-58	351.1 - 385.0
-40	-40	196.6 - 213.1
-30	-22	114.4 - 122.7
-20	-4	68.94 - 73.15
-10	14	42.59 - 44.76
0	32	27.14 - 28.27
10	50	17.78 - 18.36
20	68	11.96 - 12.25
30	86	8.202 - 8.399
40	104	5.721 - 5.901

50	122	4.069 - 4.226
60	140	2.945 - 3.078
70	158	2.169 - 2.280
80	176	1.622 - 1.715
90	194	1.228 - 1.306

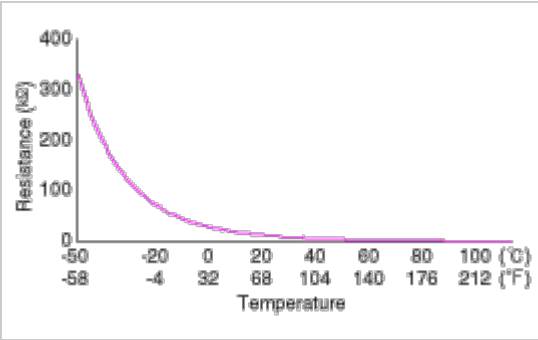

Circuit Diagram

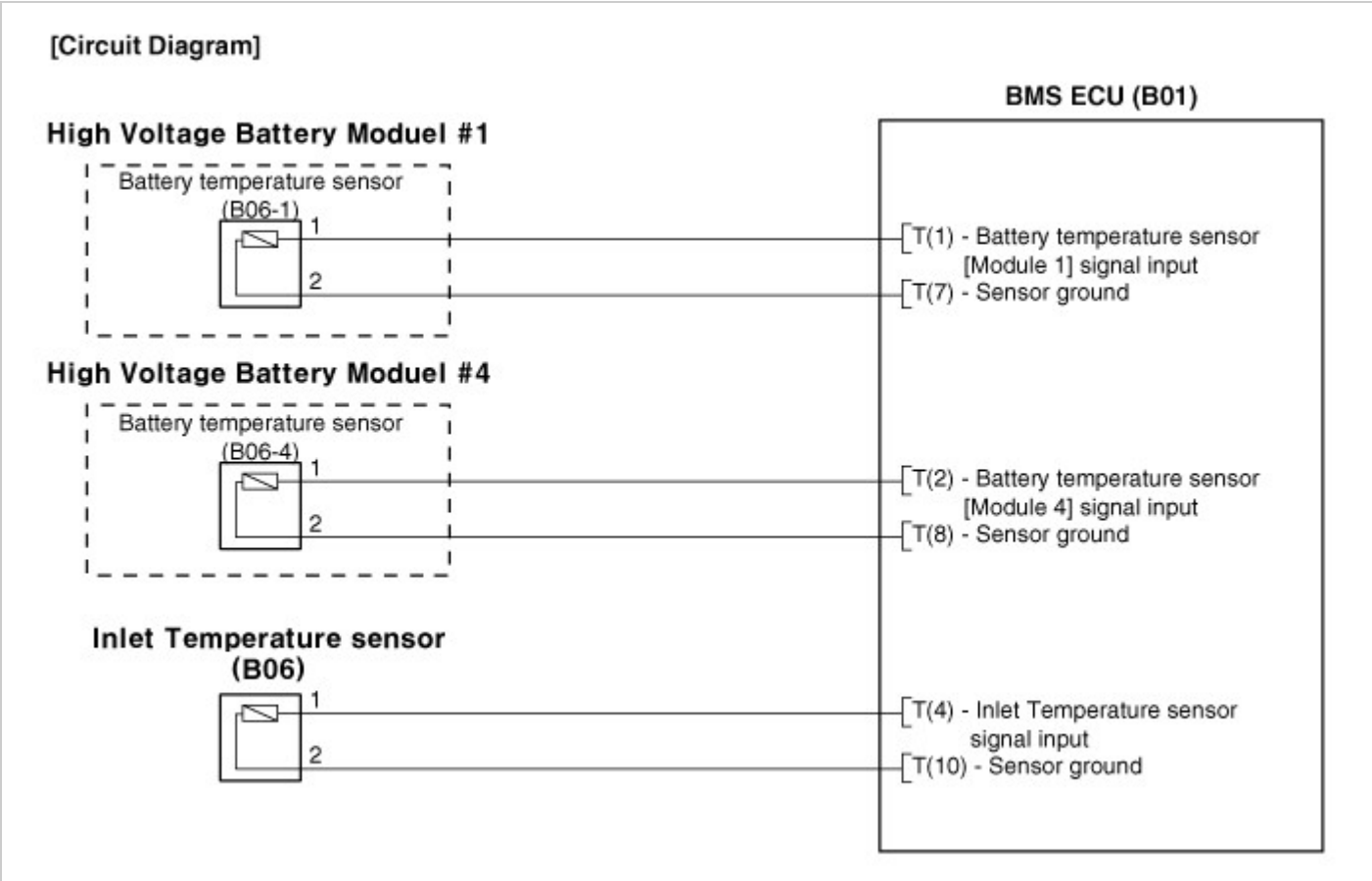

[Connection Information]

Battery Temperature Sensor (B06-05) [High Voltage Battery Module #1]

Terminal	Connected to	Function
1	BMS ECU B01-T(1)	Battery Temperature Sensor [Module 1] signal input
2	BMS ECU B01-T(7)	Sensor Ground

Battery Temperature Sensor (B06-09) [High Voltage Battery Module #4]

Terminal	Connected to	Function
1	BMS ECU B01-T(2)	Battery Temperature Sensor [Module 4] signal input
2	BMS ECU B01-T(8)	Sensor Ground

Inlet Temperature Sensor (B06)

Terminal	Connected to	Function
1	BMS ECU B01-T(4)	Inlet Temperature Sensor signal input
2	BMS ECU B01-T(10)	Sensor Ground

[Harness Connector]

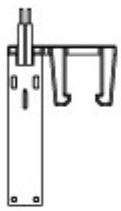

B06-1,4
MODULE 1, 4

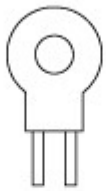

B06
AIR INLET

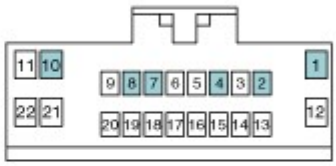

B01-T
BMS ECU

Removal

WARNING

- Be sure to read and follow the “General Safety Information and Caution” before doing any work related with the high voltage system. Failure to follow the safety instructions may result in serious electrical injuries.

1. Shut off the high voltage.
   (Refer to "High Voltage Shut-off Procedures")
2. Remove the high voltage battery pack assembly.
   (Refer to "Hybrid Control System - "Battery Pack Assembly")
3. Remove the battery pack assembly rear cover (A) after loosening the mounting nuts.

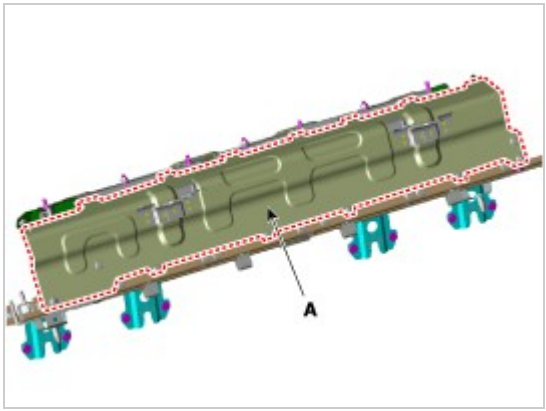

4. Remove the battery temperature sensor (A).

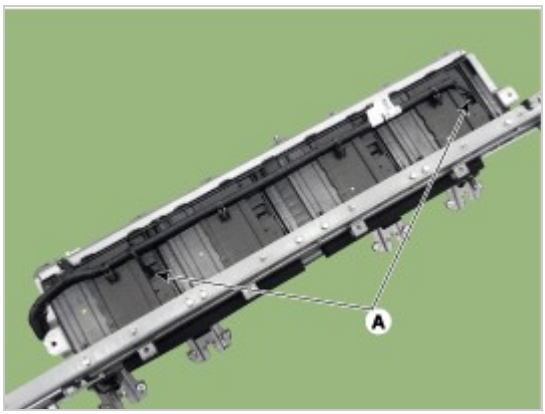

Installation

WARNING

- Be sure to read and follow the “General Safety Information and Caution” before doing any work related with the high voltage system. Failure to follow the safety instructions may result in serious electrical injuries.

1. Install the battery temperature sensors in the reverse order of removal.

Inspection

WARNING

- Be sure to read and follow the “General Safety Information and Caution” before doing any work related with the high voltage system. Failure to follow the safety instructions may result in serious electrical injuries.

1. Shut off the high voltage circuit (Refer to “High Voltage Shutoff Procedure”).
2. Connect the GDS to the Data Link Connector (DLC).
3. Turn the ignition switch ON.
4. Check the battery temperature in GDS service data.

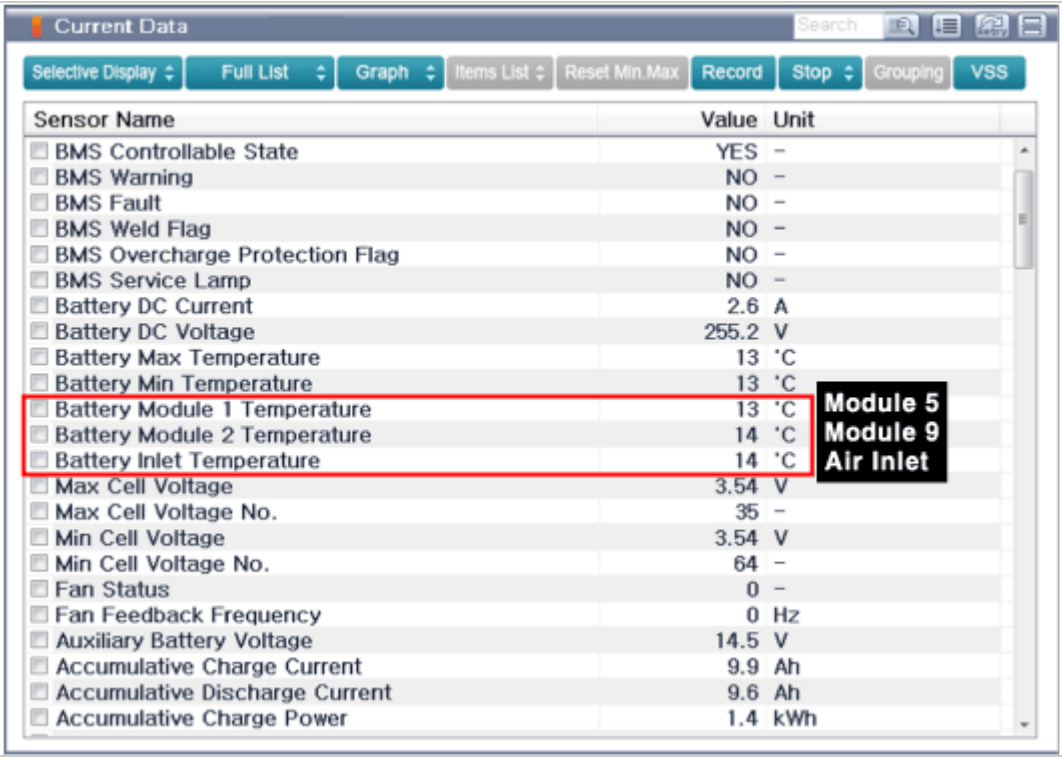

Sensor Name	Value	Unit
BMS Controllable State	YES	-
BMS Warning	NO	-
BMS Fault	NO	-
BMS Weld Flag	NO	-
BMS Overcharge Protection Flag	NO	-
BMS Service Lamp	NO	-
Battery DC Current	2.6	A
Battery DC Voltage	255.2	V
Battery Max Temperature	13	°C
Battery Min Temperature	13	°C
Battery Module 1 Temperature	13	°C
Battery Module 2 Temperature	14	°C
Battery Inlet Temperature	14	°C
Max Cell Voltage	3.54	V
Max Cell Voltage No.	35	-
Min Cell Voltage	3.54	V
Min Cell Voltage No.	64	-
Fan Status	0	-
Fan Feedback Frequency	0	Hz
Auxiliary Battery Voltage	14.5	V
Accumulative Charge Current	9.9	Ah
Accumulative Discharge Current	9.6	Ah
Accumulative Charge Power	1.4	kWh

5. Disconnect the battery temperature signal connector (A).

6. Measure resistances of the temperature signal terminals (Refer to the table below), then compare the value with the GDS service data.

Item	Terminals
Module 1	BMS ECU B01-T(1),(7)
Module 4	BMS ECU B01-T(2),(8)
Air Inlet	BMS ECU B01-T(4),(10)

Specification: Refer to “Specification”

Hybrid Control System

Component Location

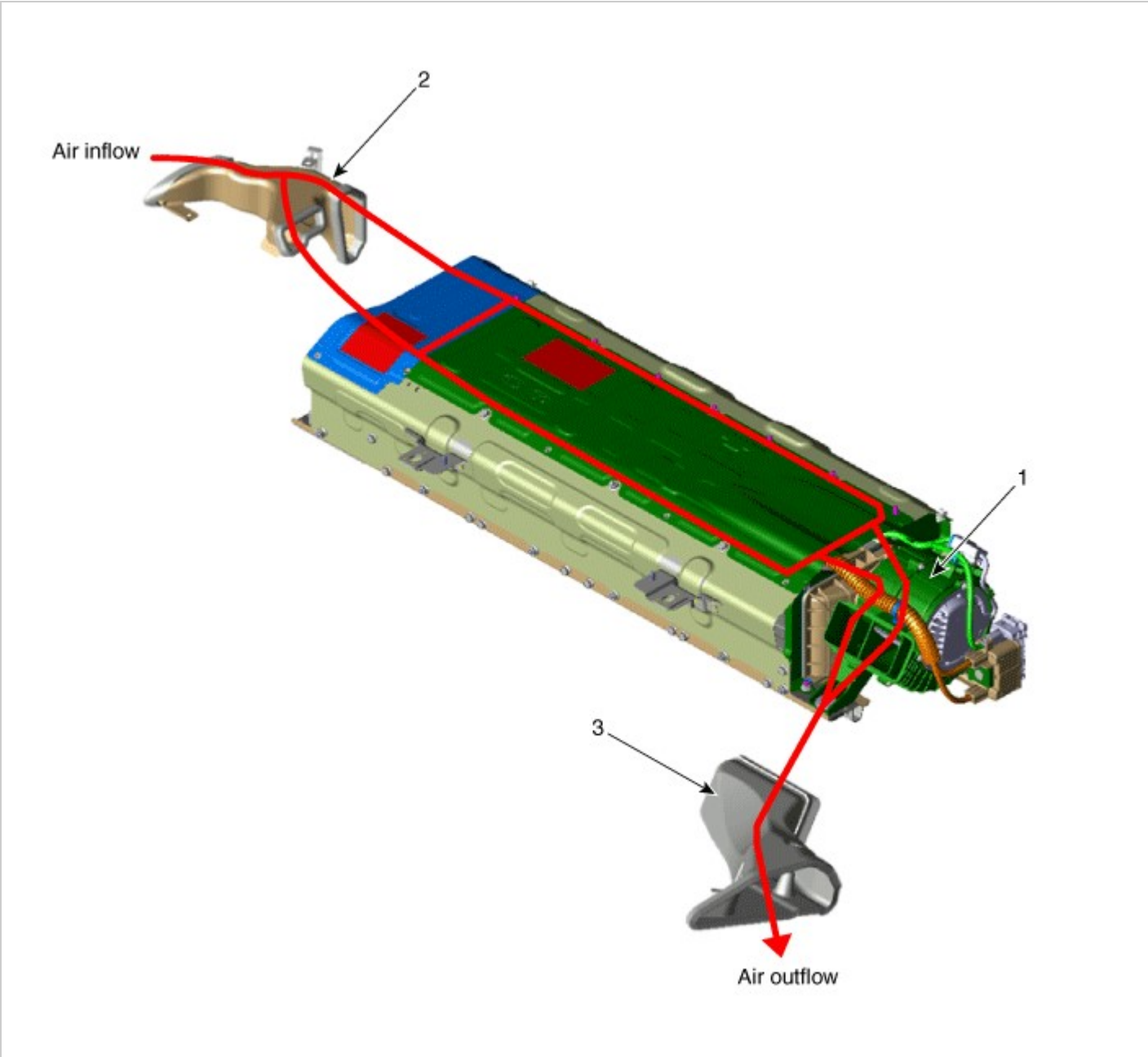

1. Cooling Fan
2. Cooling Duct (Inlet)
3. Cooing Duct (Outlet)

Hybrid Control System

Description

The cooling Fan consists of the main connector, the cooling fan relay and the BLDC motor. It is controlled by the BMS ECU PWM signal which varies with the high voltage battery condition (9-Speed).

Hybrid Control System

Components

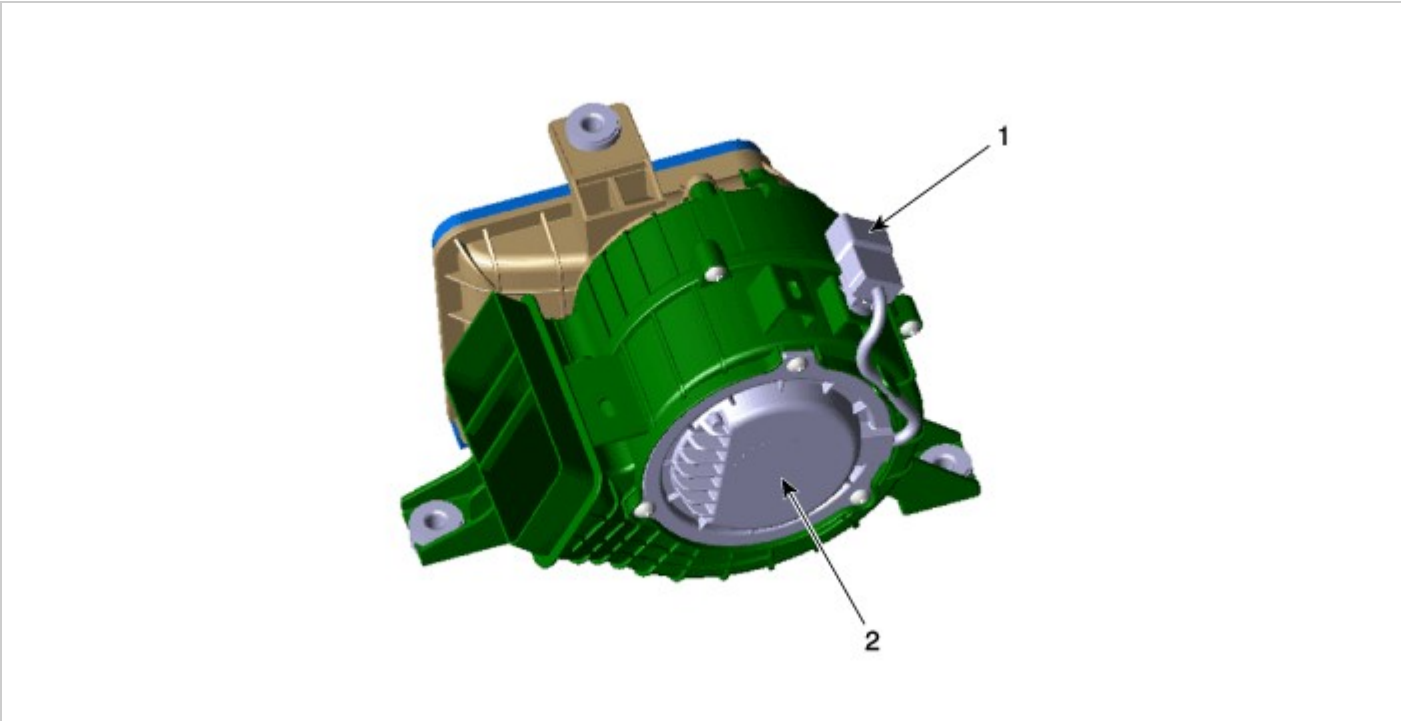

1. Main Connector
2. BLDC Motor

Hybrid Control System

Specification

Duty (%)	Fan Speed (rpm)
10	500
20	1,000
30	1,300
40	1,600
50	1,900
60	2,200
70	2,500
80	2,800
90(Max.)	3,100
95(Max.)	3,850

Hybrid Control System

Removal

WARNING

- Be sure to read and follow the “General Safety Information and Caution” before doing any work related with the high voltage system. Failure to follow the safety instructions may result in serious electrical injuries.

1. Shut off the high voltage.
   (Refer to "High voltage Shut-off Procedures").
2. Remove the rear seat cushion.
   (Refer to Body - "Rear Seat Assembly")
3. Remove the rear door scuff trim.
   (Refer to Body - "Door Scuff Trim")
4. Remove the upper frame (A) after loosening the mounting bolts and nuts.

5. Remove the high voltage battery rear cover (A) after loosening the mounting bolts and nuts.

6. Remove the high voltage battery front cover (A) after loosening the mounting bolts and nuts.

7. Remove the outlet cooling duct.
   (Refer to Hybrid Control System - "Cooling Duct")
8. Disconnect the cooling fan connector (A).
9. Remove the safety plug cable after loosening the mounting nuts (B).

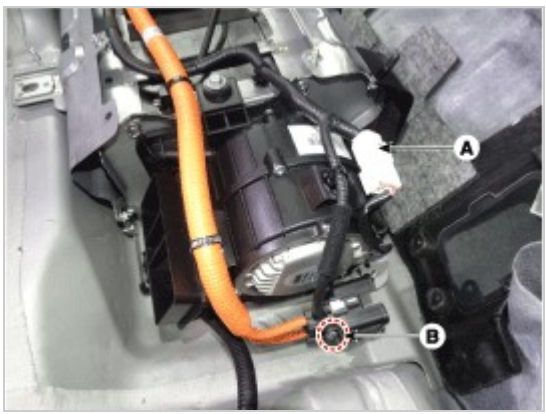

10. Remove the cooling fan after loosening the mounting bolts and nuts (A).

Installation

WARNING

- Be sure to read and follow the “General Safety Information and Caution” before doing any work related with the high voltage system. Failure to follow the safety instructions may result in serious electrical injuries.

1. Install the cooling fan in the reverse order of removal.

Cooling fan installation nut:7.8 - 11.8 N.m (0.8 - 1.2 kgf.m, 5.8 - 8.7 lb-ft)

Inspection

1. Connect the GDS to the Data Link Connector (DLC).
2. Connect the oscilloscope probe to the BMS extension connectors.

Cooling Fan Speed Waveform:
BMS Extension Connector B01-S(20)
Cooling Fan Feedback Waveform:
BMS Extension Connector B01-S(4)

3. Turn the ignition switch ON.
4. Check “Fan Status”, “Current” "Waveform" and waveforms in each cooling fan operation mode by using “Actuation Test” function in GDS.

Specification : Refer to "Specification"

[Cooling Fan at 1st]

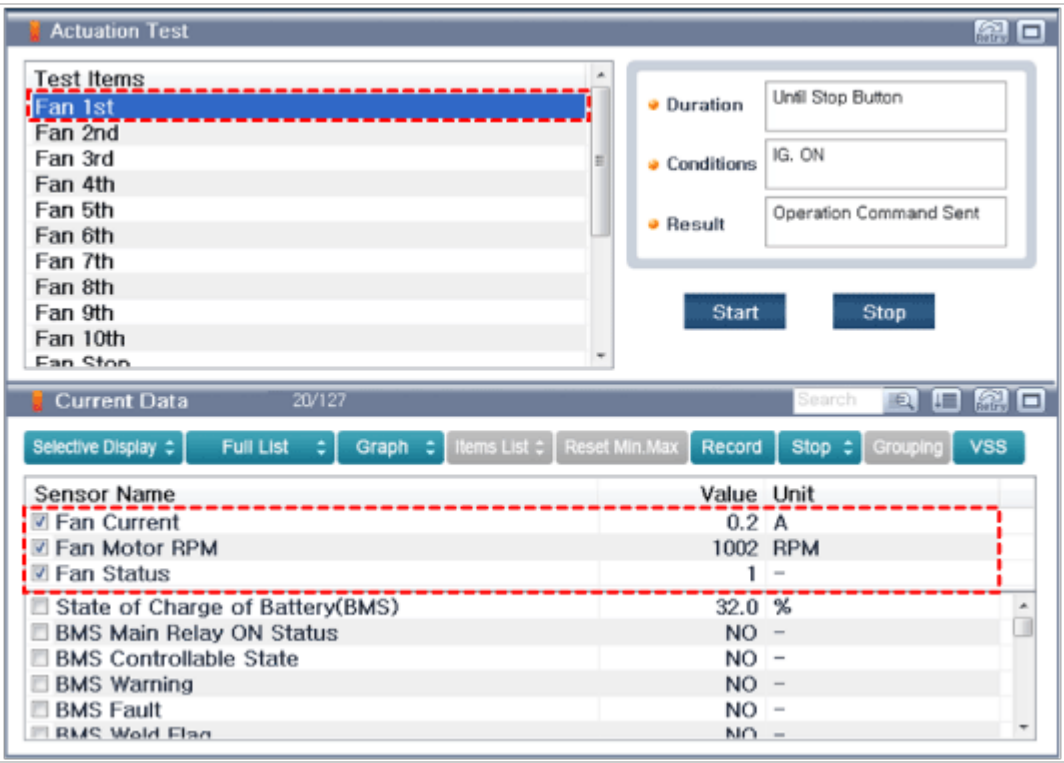

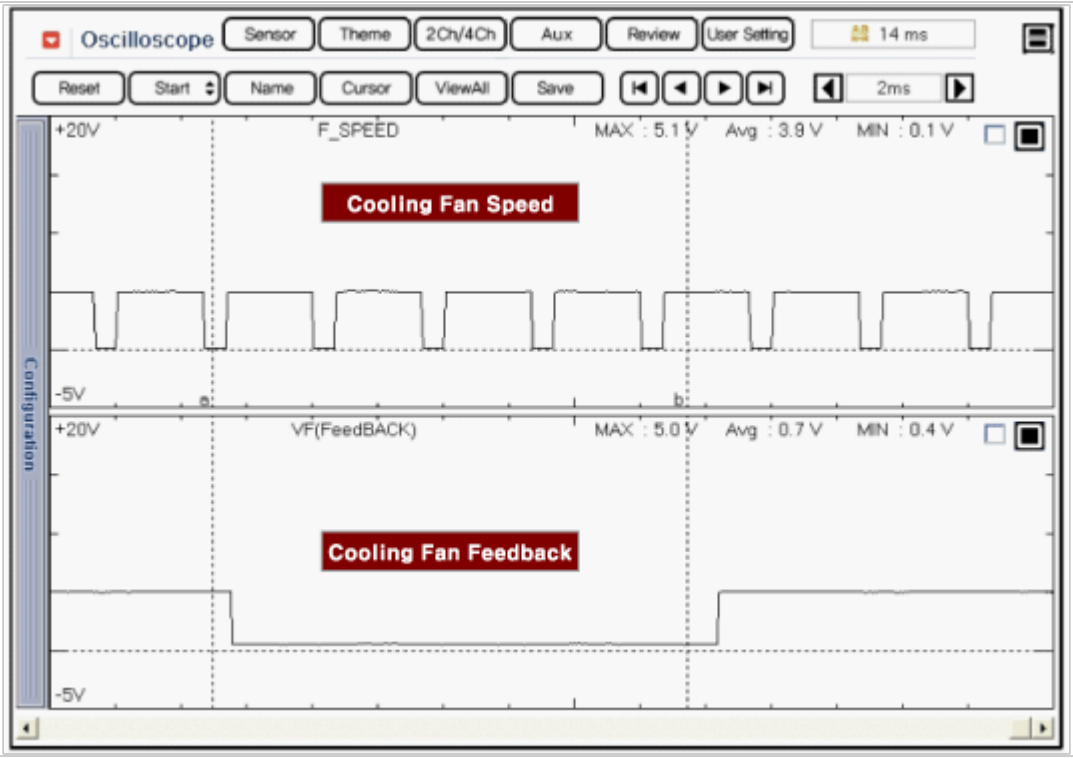

[Cooling Fan at 2st]

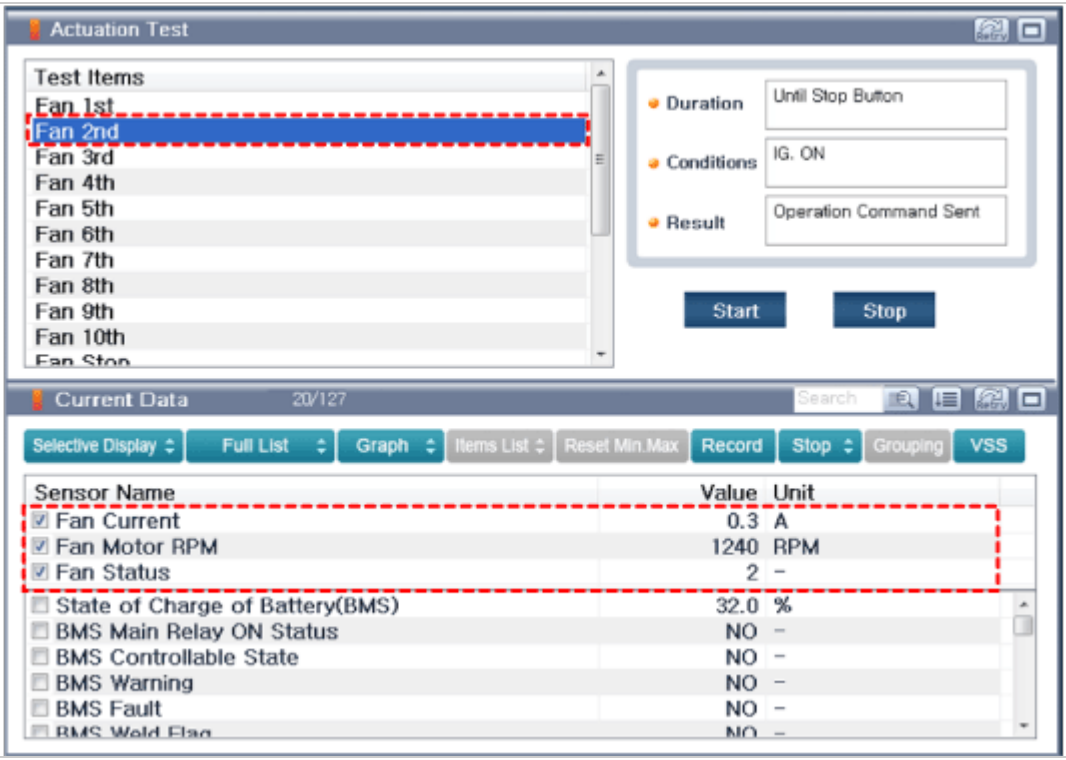

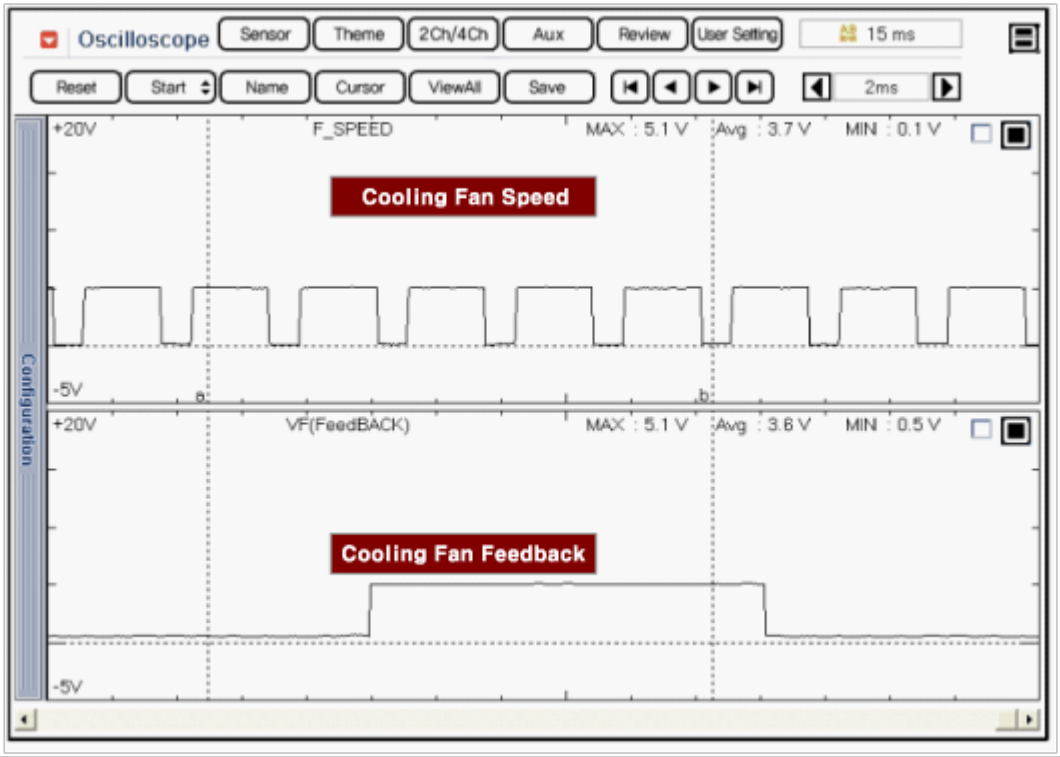

[Cooling Fan at 3st]

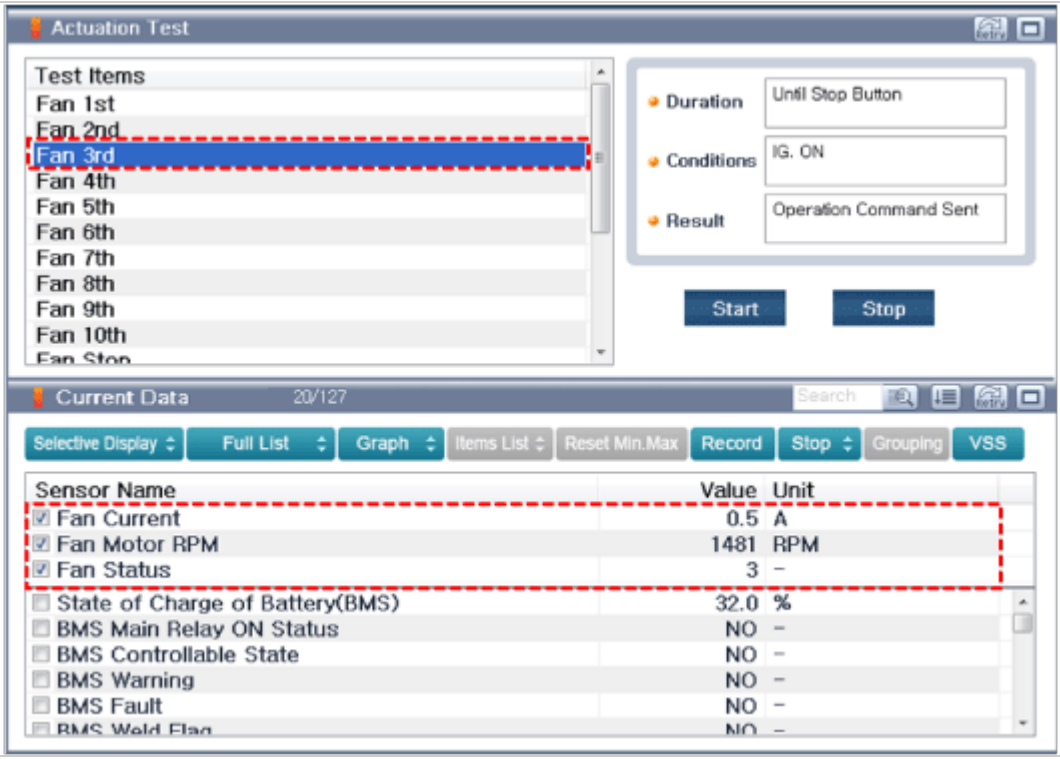

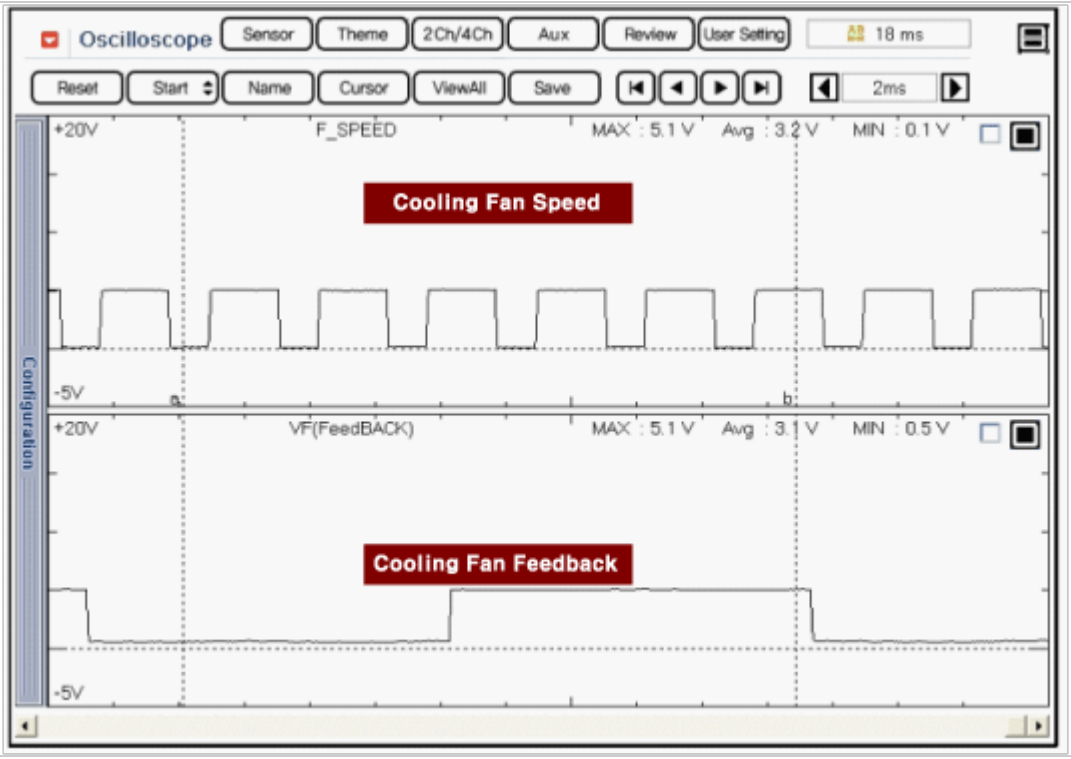

[Cooling Fan at 4st]

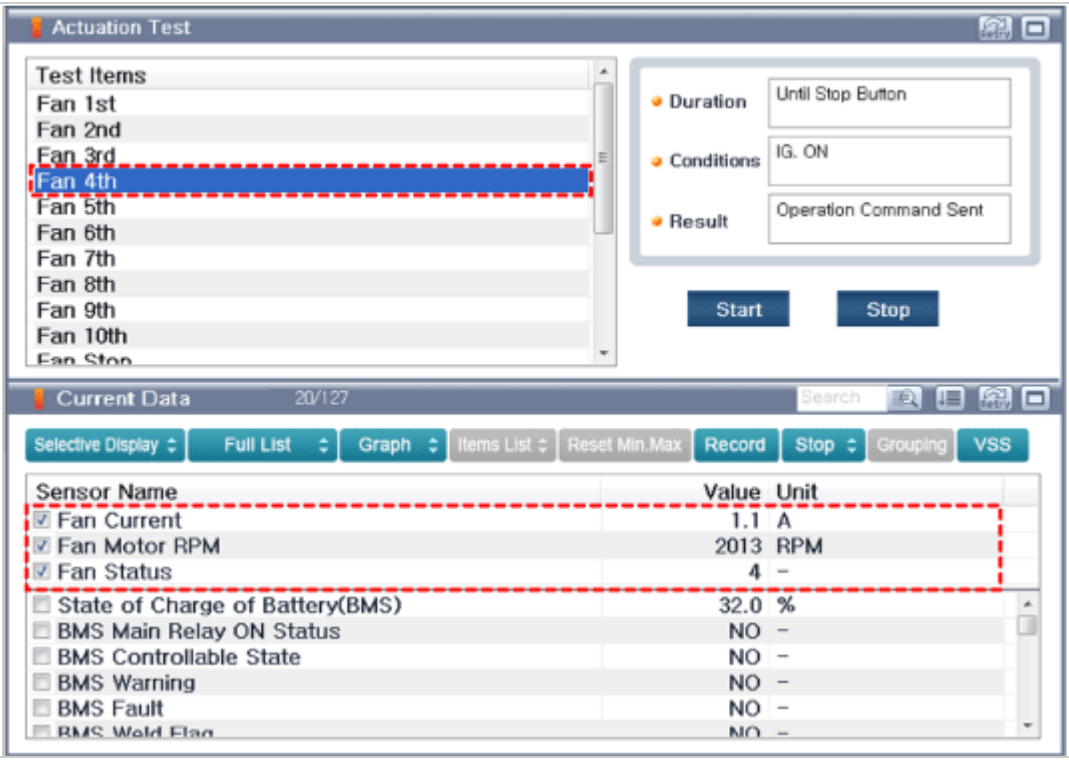

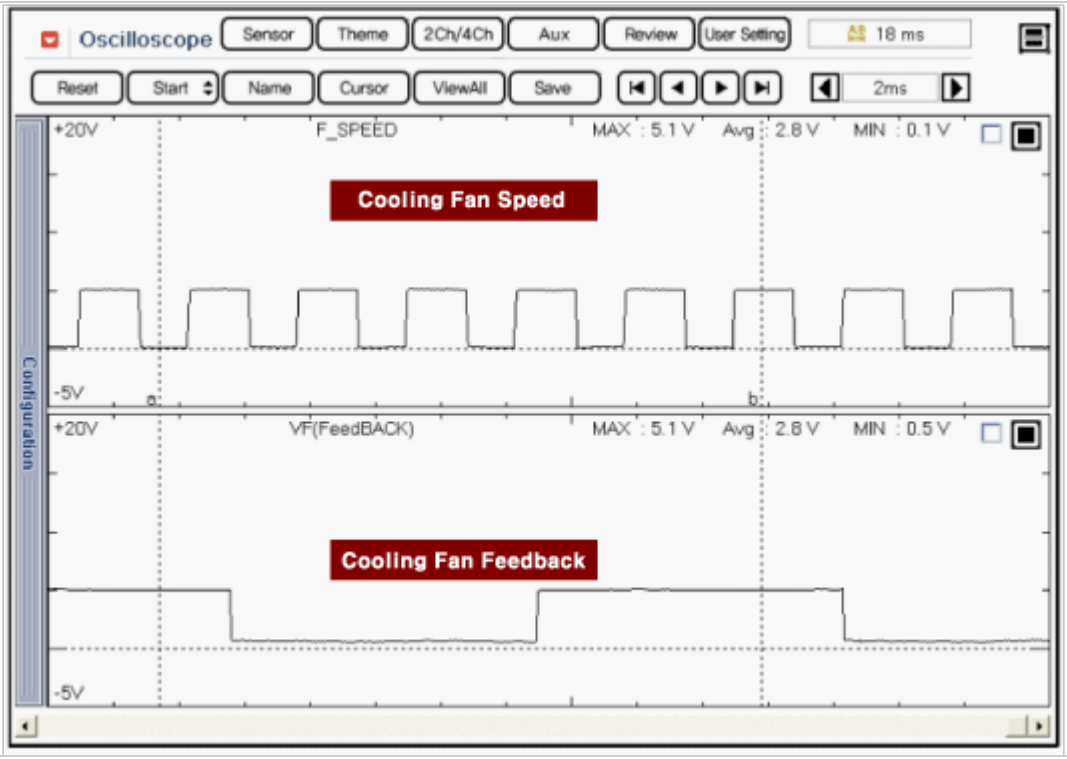

[Cooling Fan at 5st]

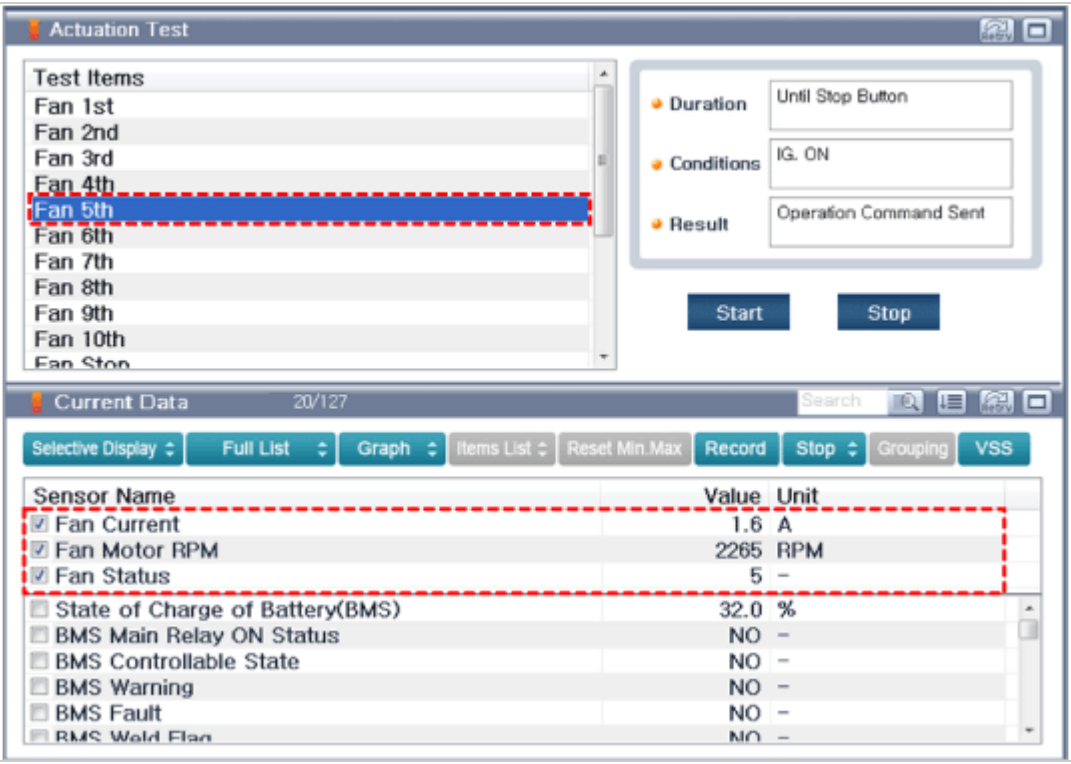

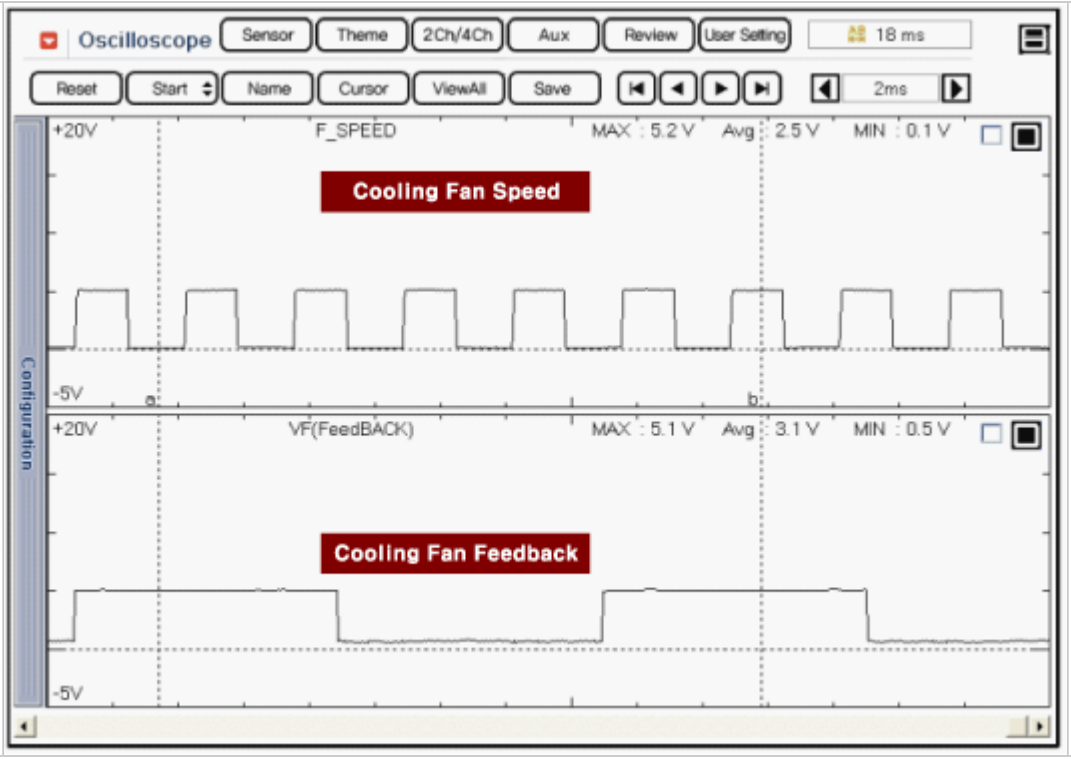

[Cooling Fan at 6st]

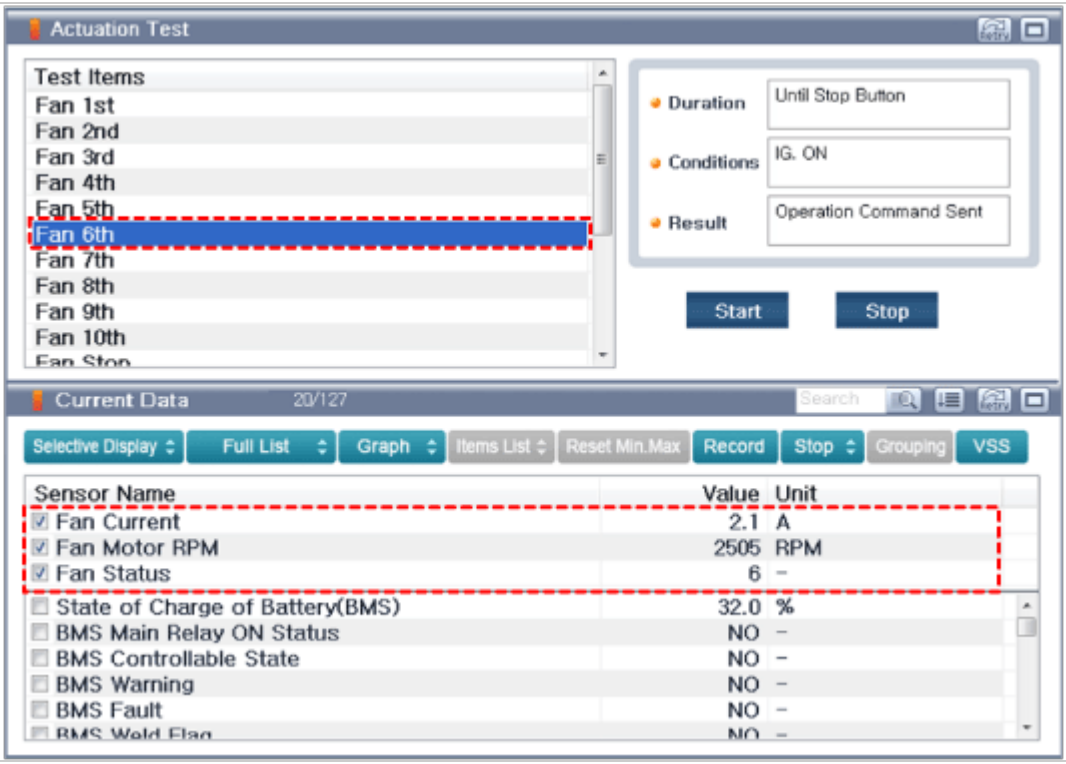

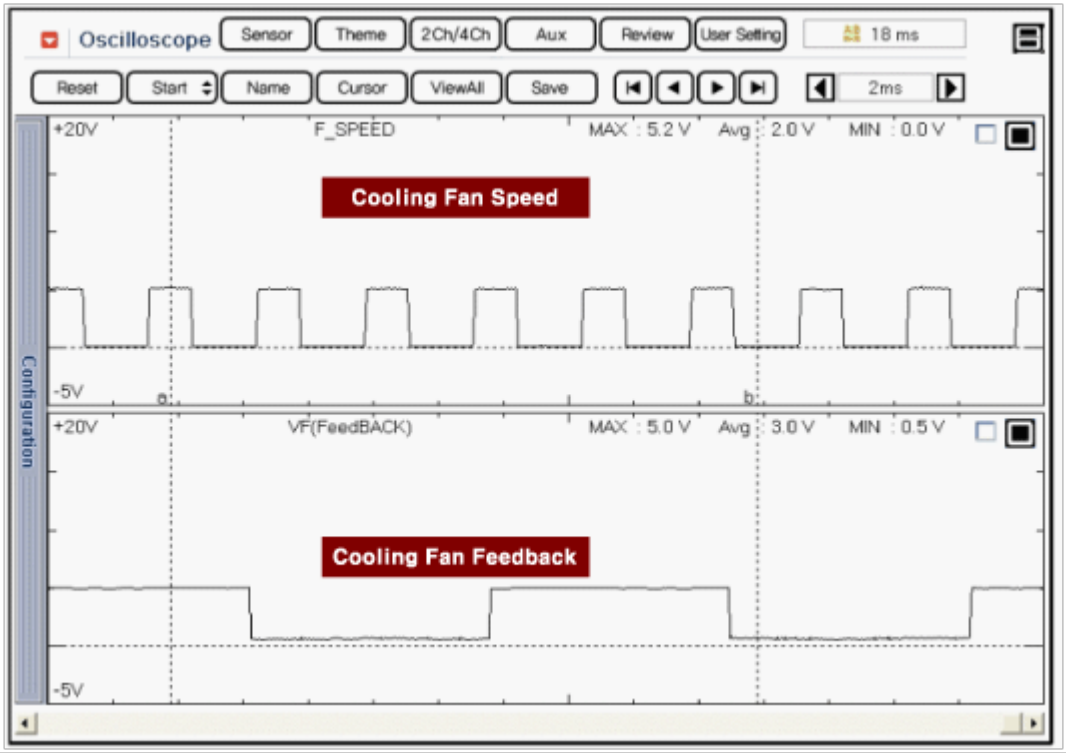

[Cooling Fan at 7st]

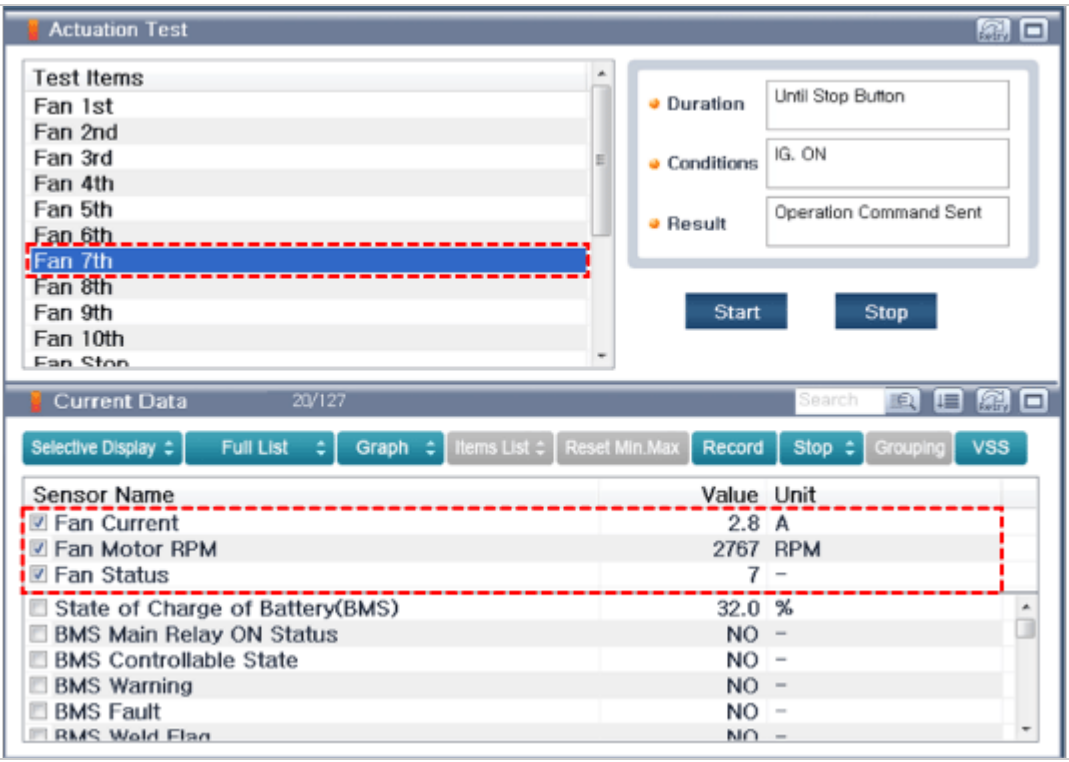

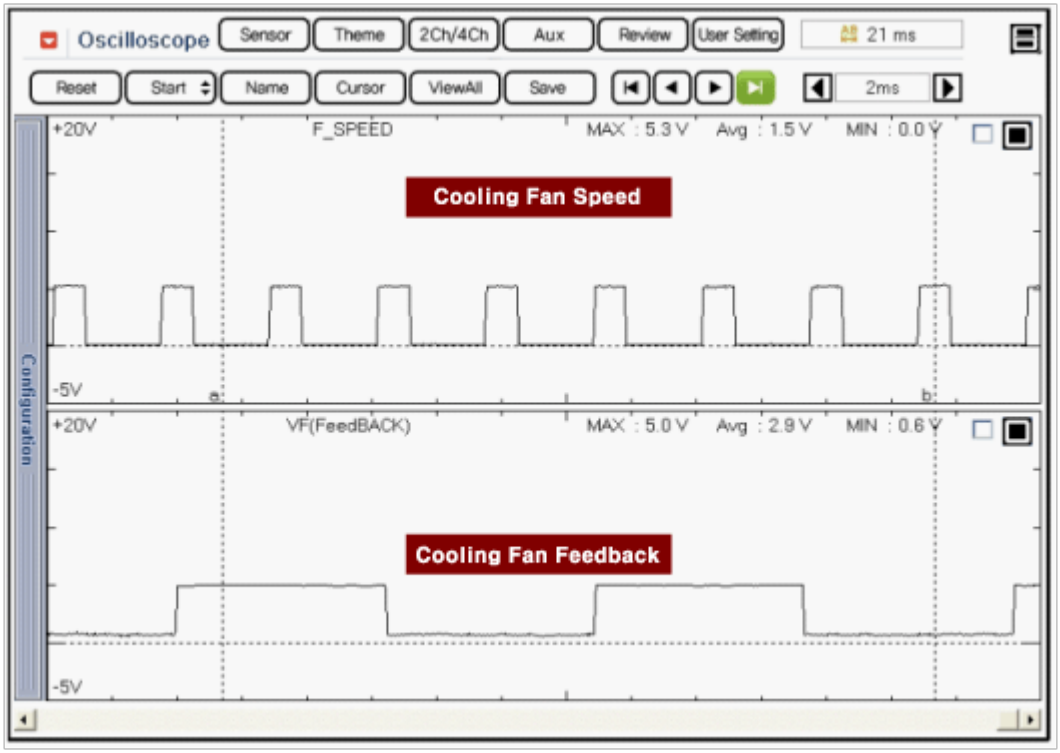

[Cooling Fan at 8st]

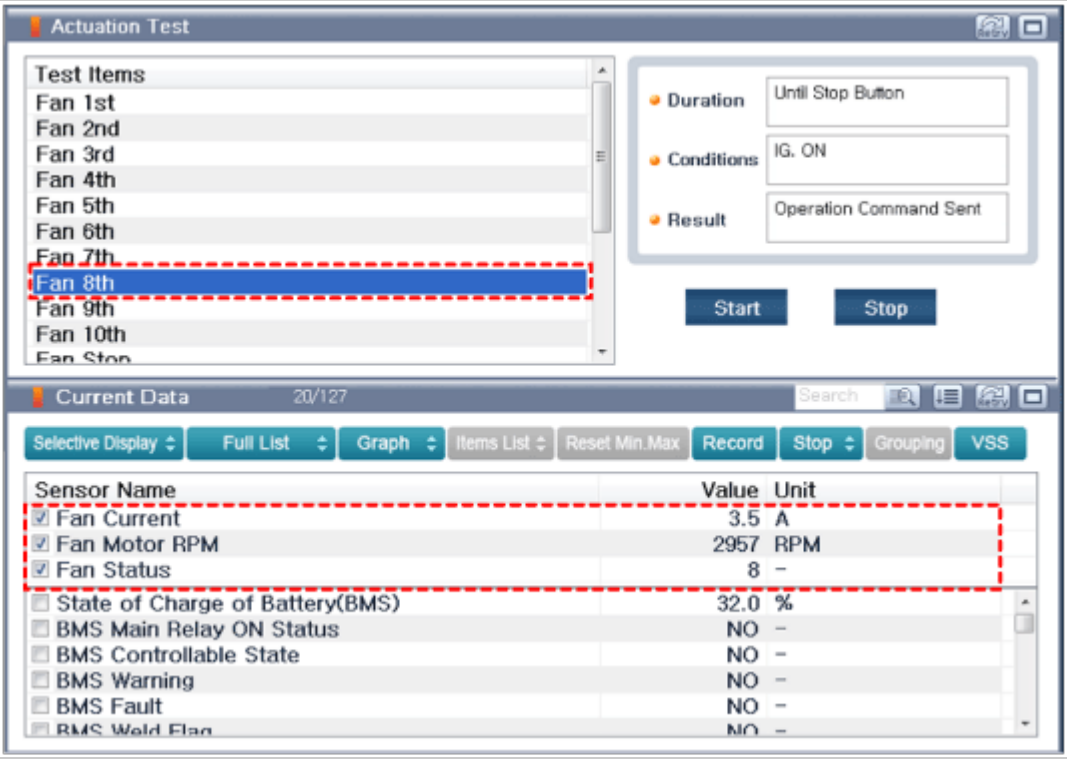

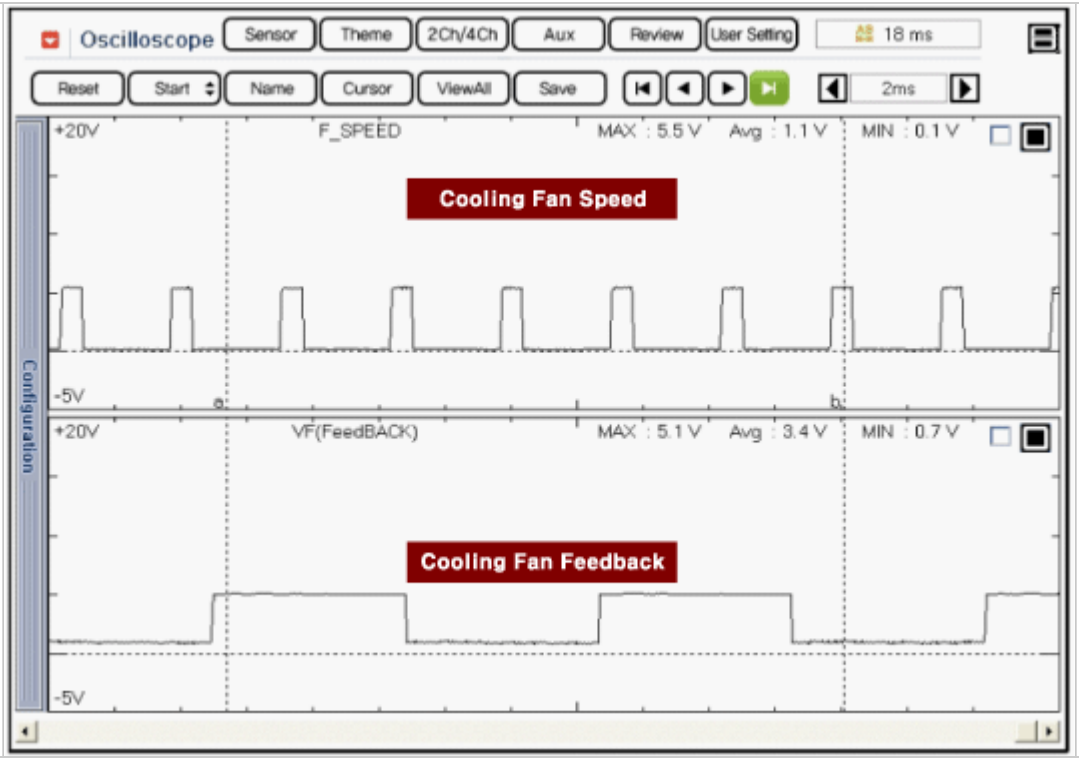

[Cooling Fan at 9st]

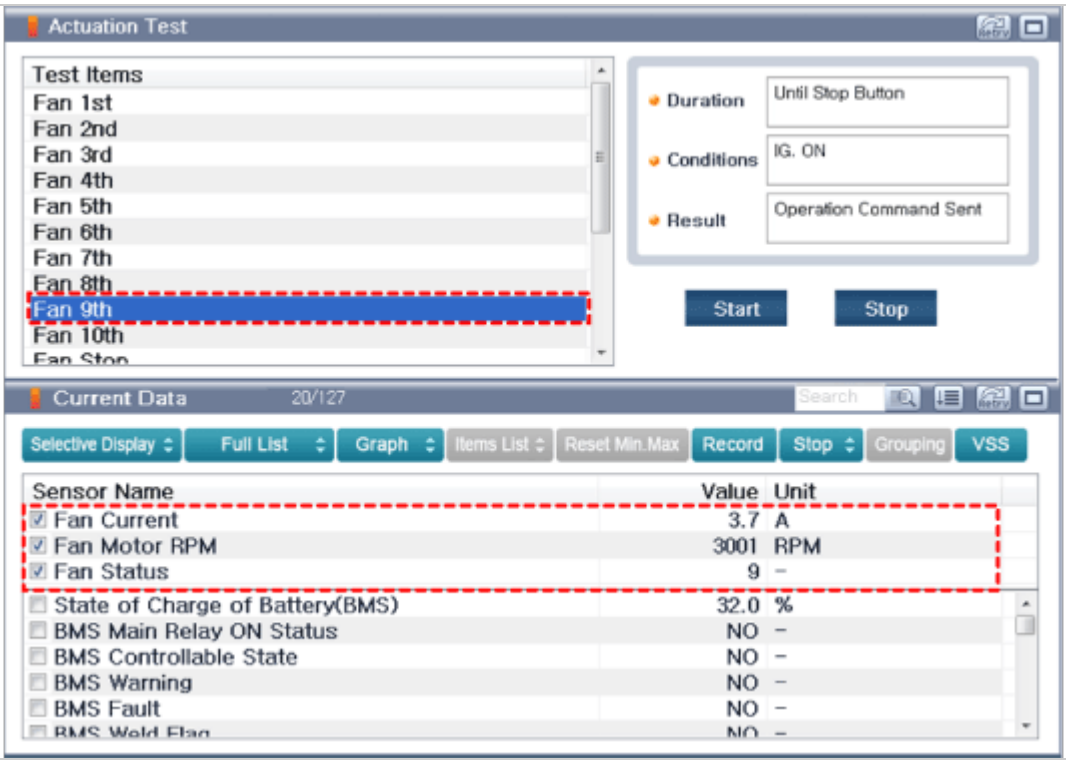

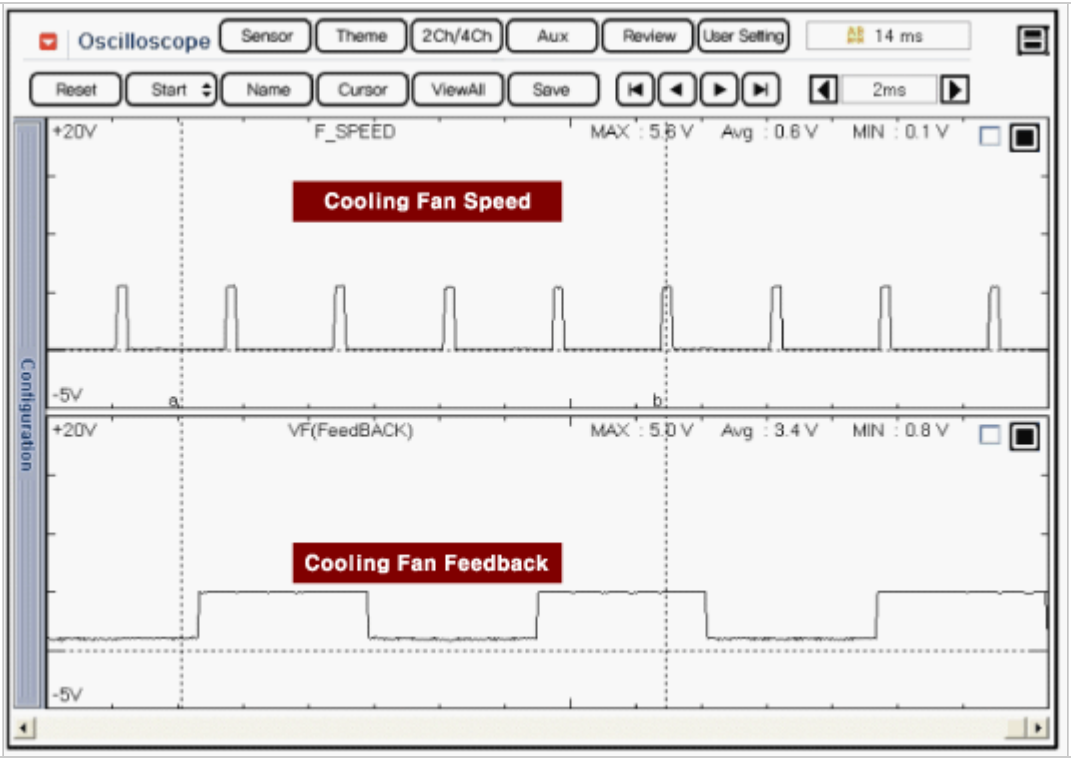

Removal

WARNING

- Be sure to read and follow the “General Safety Information and Caution” before doing any work related with the high voltage system. Failure to follow the safety instructions may result in serious electrical injuries.

Cooling Duct (Inlet)

1. Shut off the high voltage.
   (Refer to "High voltage Shut-off Procedures").
2. Remove the rear seat cushion.
   (Refer to Body - "Rear Seat Assembly")
3. Remove the rear door scuff trim.
   (Refer to Body - "Door Scuff Trim")
4. Remove the inlet cooling duct (A) after loosening the mounting fastener.

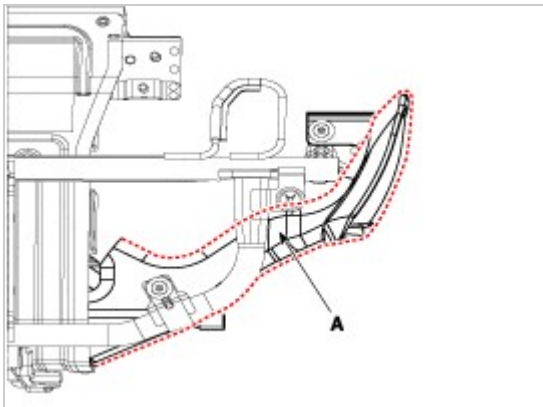

Cooling Duct (outlet)

1. Shut off the high voltage.
   (Refer to "High voltage Shut-off Procedures").
2. Remove the rear seat cushion.
   (Refer to Body - "Rear Seat Assembly")
3. Remove the rear door scuff trim.
   (Refer to Body - "Door Scuff Trim")
4. Remove the outlet cooling duct (A) after loosening the mounting nut.

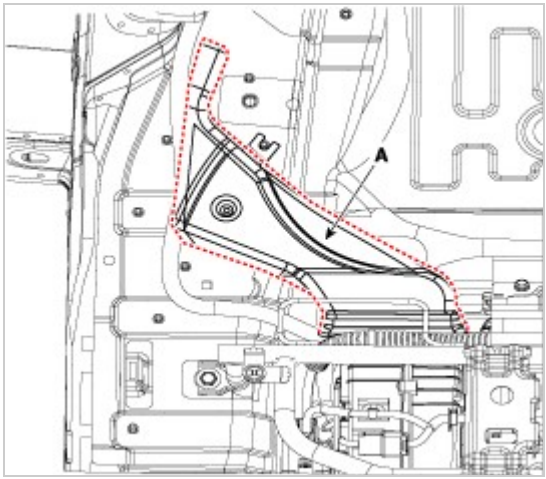

Installation

WARNING

- Be sure to read and follow the “General Safety Information and Caution” before doing any work related with the high voltage system. Failure to follow the safety instructions may result in serious electrical injuries.

1. Install the cooling ducts in the reverse order of removal.

Outlet cooling duct installation nut:
7.8 - 11.8N.m (0.8 - 1.2kgf.m, 5.8 - 8.7lb-ft)

Hybrid Control System

Description

The Low Voltage DC/DC is integrated into the HPCU. It charges the auxiliary battery as a substitute for generator by converting the high voltage (DC 270V) from the high voltage battery into low voltage (DC 12V).

Hybrid Control System

Component Location

1. Low Voltage DC/DC Converter (LDC)
2. Power Outlet Terminal (DC 12V)
3. Ground Terminal

Hybrid Control System

Specification

Item	Specification
Input Voltage (V)	200 - 310
Output Voltage (V)	12.8 - 14.7

Rated Power (kW)	1.8
Cooling Method	Water-cooled

Schematic Diagram

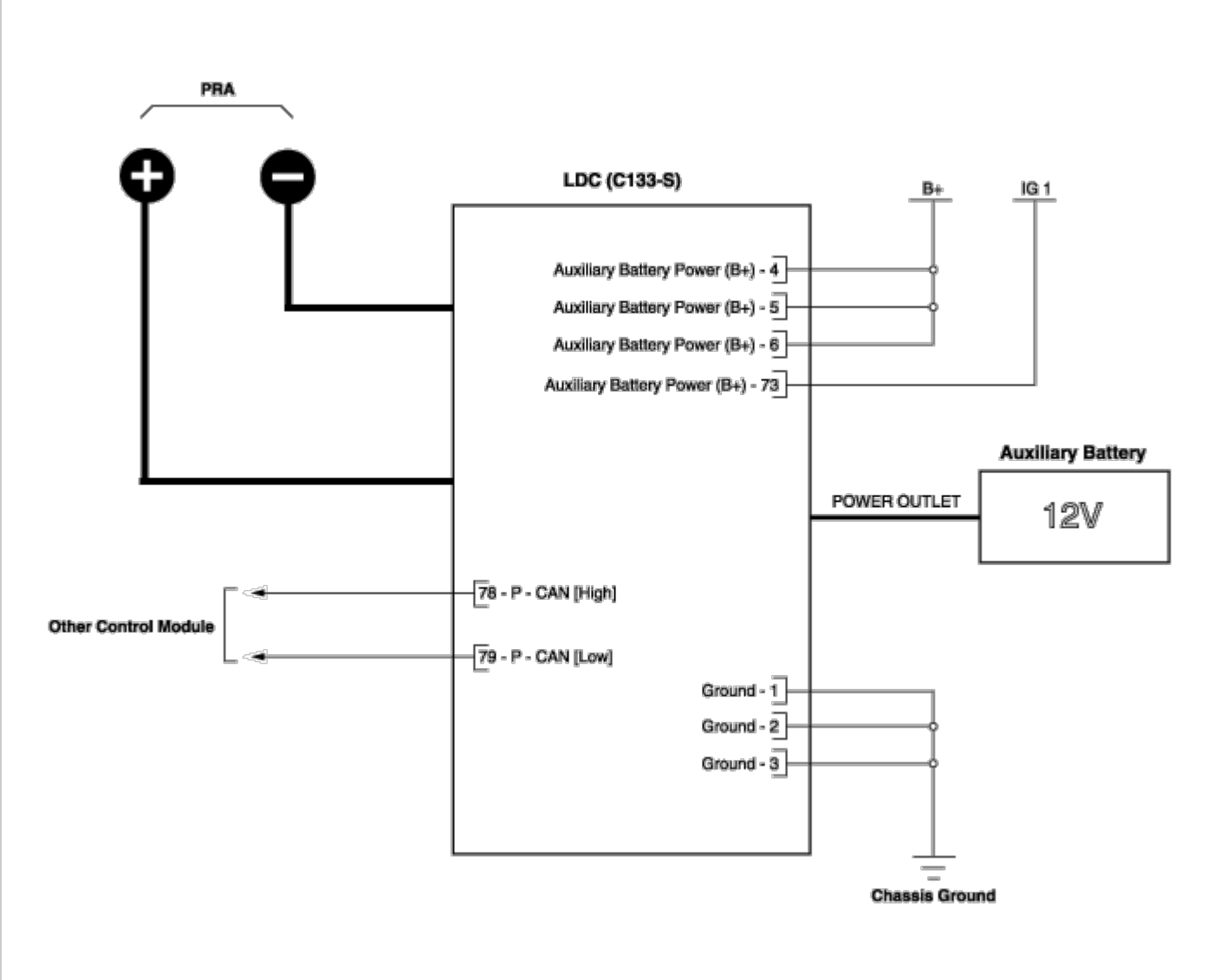

Removal

WARNING

- Be sure to read and follow the “General Safety Information and Caution” before doing any work related with the high voltage system. Failure to follow the safety instructions may result in serious electrical injuries.
- Be sure to shut off the high voltage before doing any work related with the high voltage system(Refer to "High Voltage Shut-off Procedure"). Failure to follow the safety instructions may result in serious electrical injuries.

1. Shut off the high voltage circuit.
   (Refer to Hybrid Control System - “High Voltage Shutoff Procedure”)
2. Remove the air cleaner assembly and air duct.
   (Refer to Engine Mechanical System - "Air Cleaner")
3. Remove the ECM & TCM bracket assembly.
   (Refer to Engine Control/Fuel System - "Engine Control Module")
4. Drain the coolant of hybrid motor cooling system.
   (Refer to Hybrid Motor Cooling System - "Coolant")
5. Remove the HPCU protector (A) after loosening the mounting bolts.

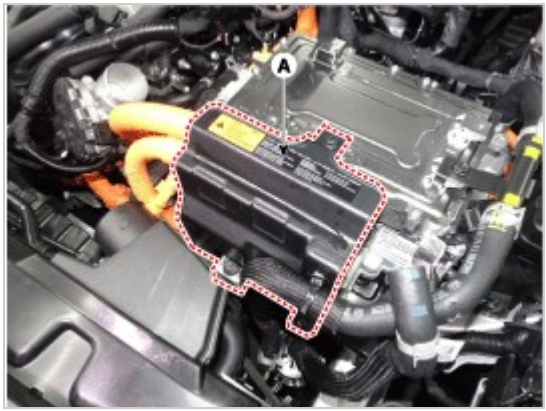

6. Disconnect the motor power cable connector (A) and HSG power cable conector (B).

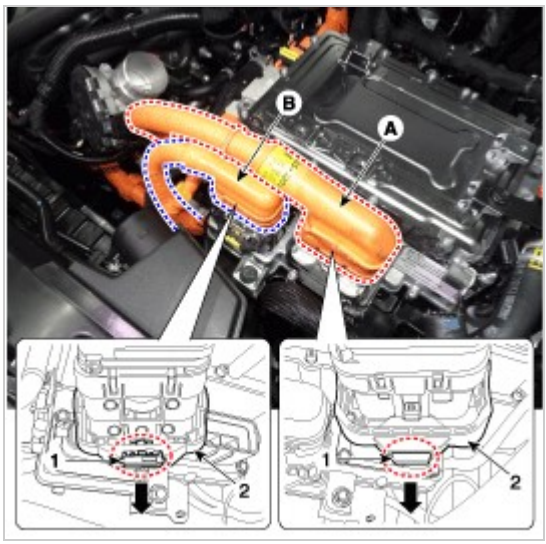

7. Disconnect the power cable (A) [↔ High voltage battery system assembly] and power cable (B) [↔ HSG & Electric A/C compressor].

Information

- Remove the inverter power cale in the follwing order.

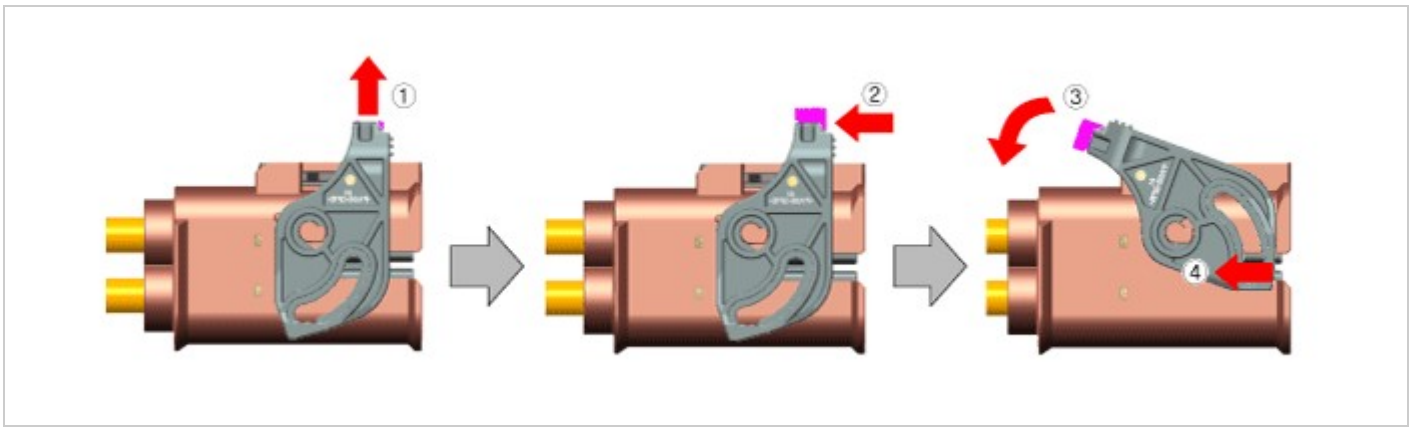

8. Disconnect the HCU & inverter (MCU) connector (A).

9. Disconnect the coolant outlet hose & pipe (A) after loosening the mounting bolt.

10. Disconnect the LDC power output cable (A) and LDC ground (-) cable (C) after loosening the mounting bolt and nut.

11. Remove the HPCU (A) after loosening the mounting bolts.

Installation

WARNING

- Be sure to read and follow the “General Safety Information and Caution” before doing any work related with the high voltage system. Failure to follow the safety instructions may result in serious electrical injuries.

1. Install the LDC in the reverse order of removal.

HPCU installation bolt:

19.6 - 29.4 N.m (2.0 - 3.0 kgf.m, 14.5 - 21.7 lb-ft)

LDC power otulet cable installation bolt:

3.9 - 5.9 N.m (0.4 - 0.6 kgf.m, 2.9 - 4.3 lb-ft)
LDC ground cable installation bolt:
3.9 - 5.9 N.m (0.4 - 0.6 kgf.m, 2.9 - 4.3 lb-ft)

2. Refill the hybrid motor cooling system coolant and perform air bleeding by using the GDS. (refer to Hybrid Motor Cooling System - "Coolant")

> **NOTICE**
> • Perform HCU Variant Coding and Engine Clutch / Motor Resolver learning after replacing the HPCU.

HCU Variant Coding

1. Turn the ignition switch OFF.
2. Connect the KDS / GDS to Data Link Connector (DLC).
   Turn the ignition switch ON.
3. Select "Vehicle, Model year, Engine, System".
4. Select "Vehicle S/W Management".
5. Select "HCU Variant Coding".

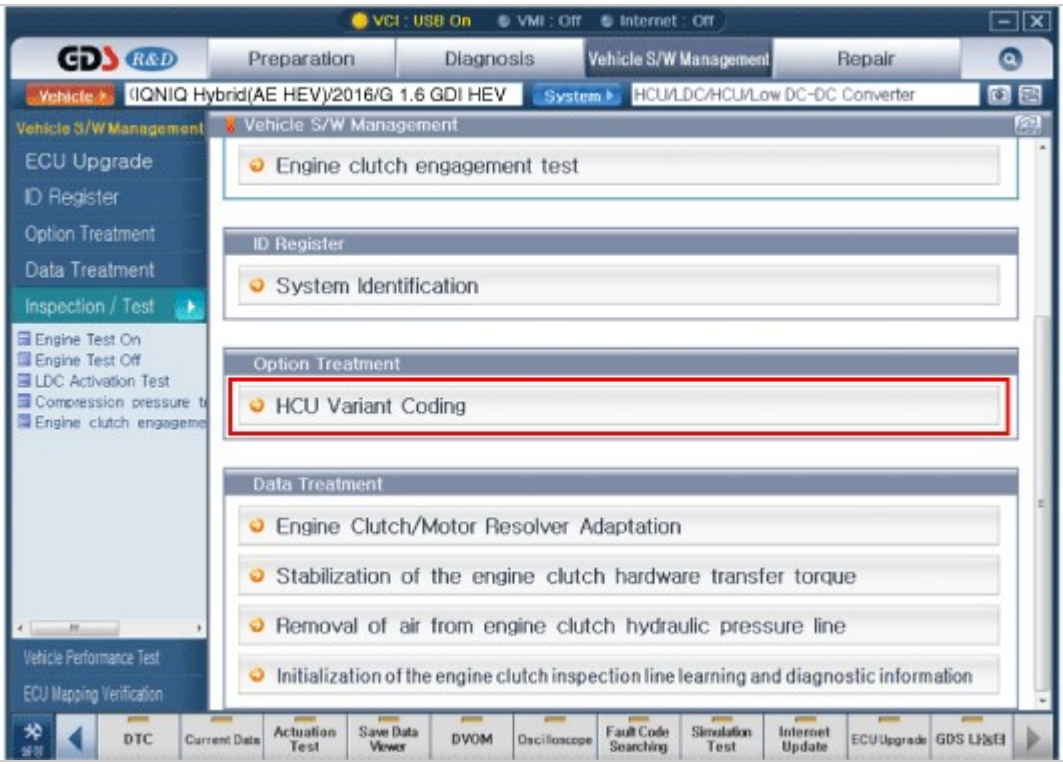

Engine clutch/motor resolver adaptation.

1. Turn the ignition switch OFF.
2. Connect the KDS / GDS to Data Link Connector (DLC).
   Turn the ignition switch ON.
3. Select "Vehicle, Model year, Engine, System".
4. Select "Vehicle S/W Management".
5. Select "Engine clutch/motor resolver adaptation.".

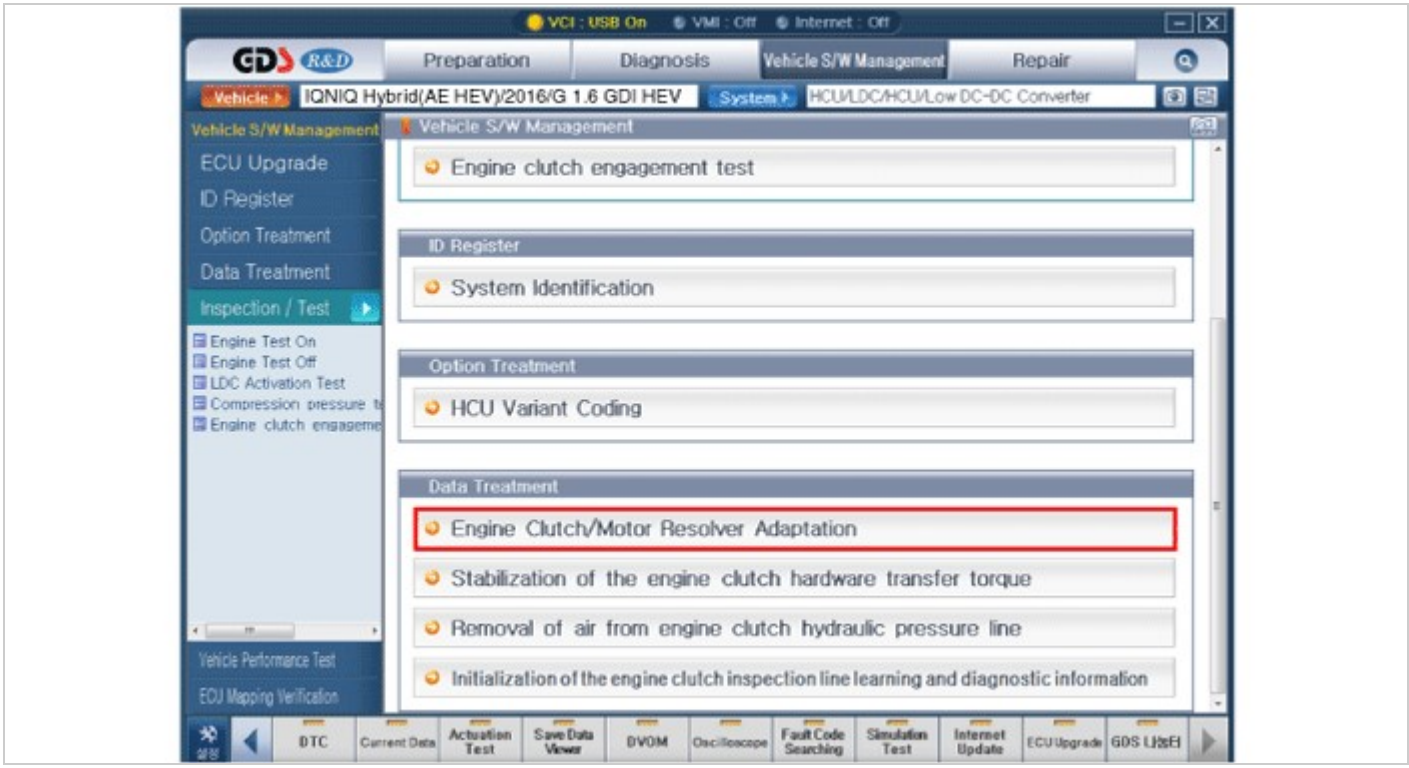

Components

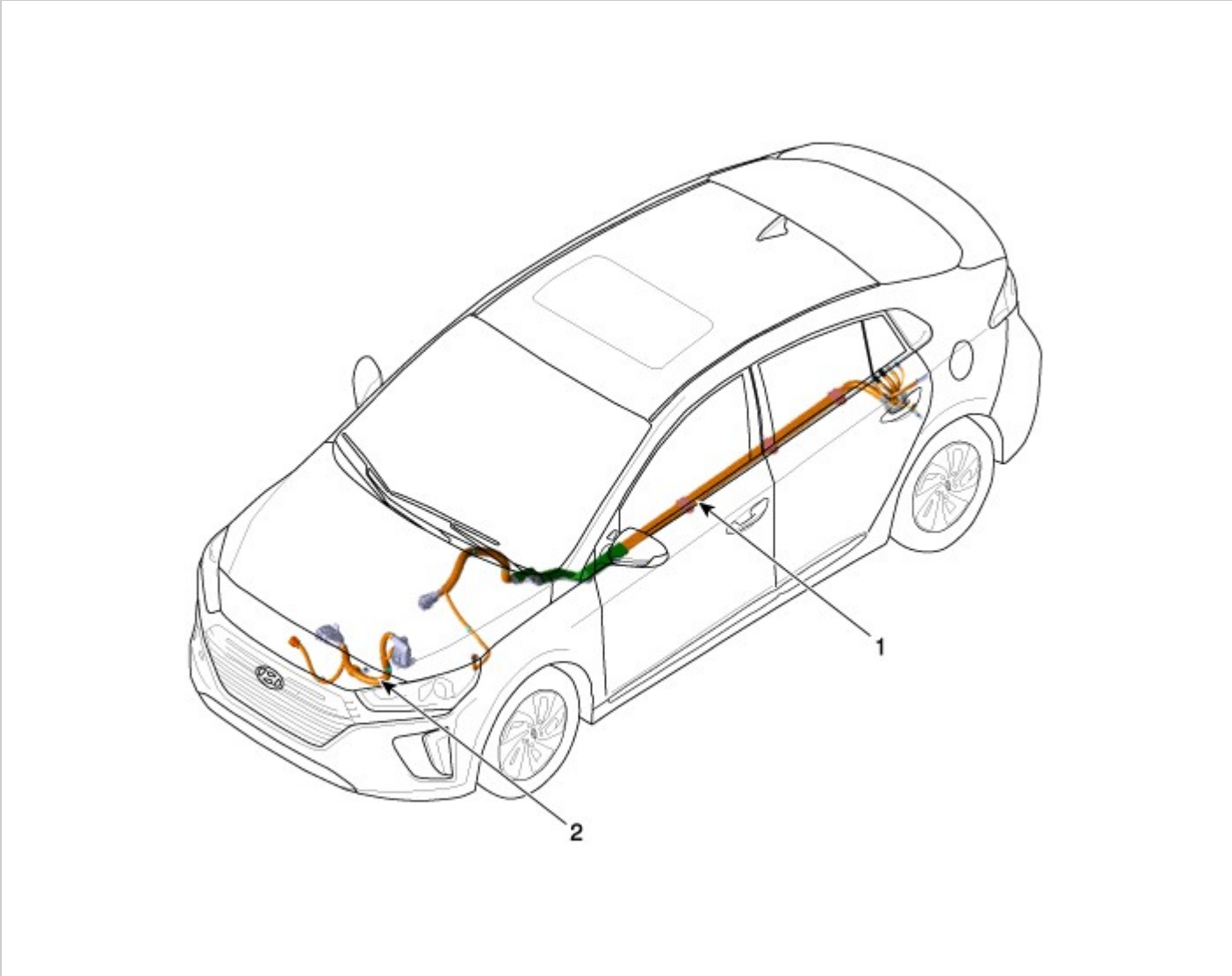

1. Power Cable (Main)
2. Power Cable
(Inverter ↔ HSG & A/C Electric Compressor)

Removal

WARNING

- Be sure to read and follow the “General Safety Information and Caution” before doing any work related with the high voltage system. Failure to follow the safety instructions may result in serious electrical injuries.

1. Shut off the high voltage circuit.
   (Refer to Hybrid Control System - “High Voltage Shutoff Procedure”)
2. Remove the air cleaner assembly and air duct.
   (Refer to Engine Mechanical System - "Air Cleaner")
3. Disconnect the power cable (A) from the HPCU.

Information

- Remove the inverter power cale in the follwing order.

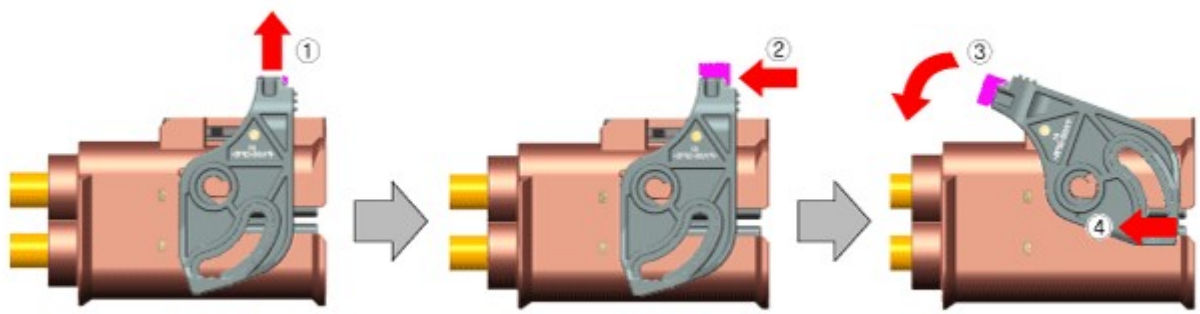

4. Remove the positive (+) cable (A) after loosening the mounting nut.

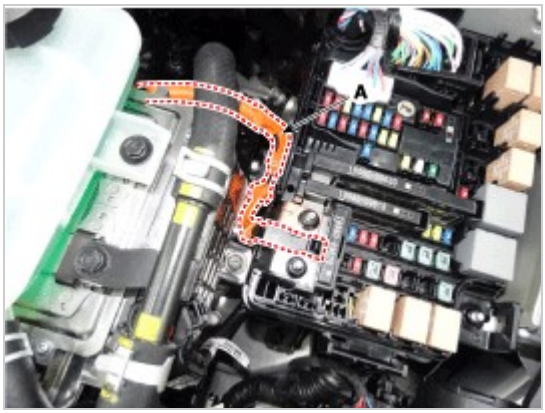

5. Remove the high voltage battery inlet cooling duct.
   (Refer to High Voltage Battery Cooling System - "Cooling Duct")
6. Disconnect the negative (-) battery cable connector (A).

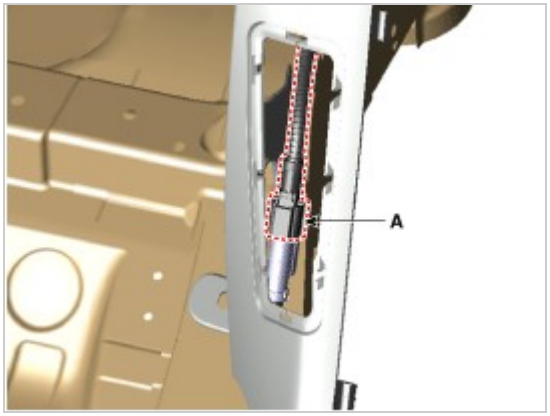

7. Disconnect the power cable connector (-) (A) and power cable connector (+) (B).
8. Disconnect the auxiliary 12V battery positive (+) cable after loosening the mounting nut (C).
9. Disconnect the ground cable (D) after loosening the mounting bolt.

10. Lift the vehicle.
11. Remove the side under cover (A) after loosening the mounting bolts and nuts.

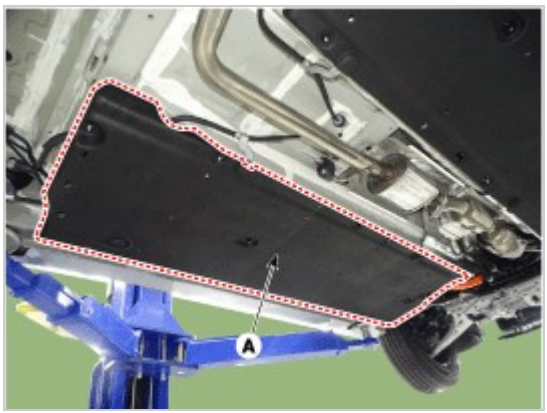

12. Remove the power cable after loosening the mounting nuts (A).

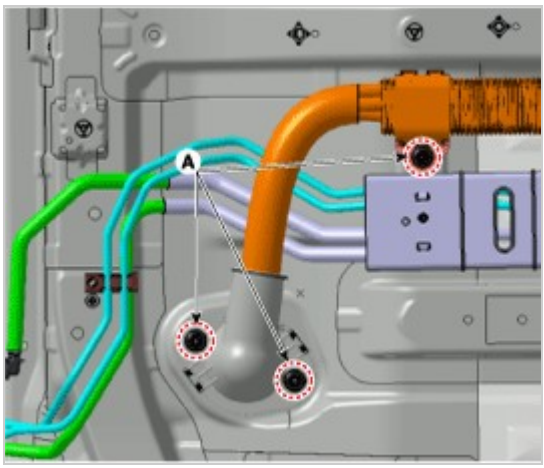

Installation

WARNING

- Be sure to read and follow the “General Safety Information and Caution” before doing any work related with the high voltage system. Failure to follow the safety instructions may result in serious electrical injuries.
- Be sure to shut off the high voltage before doing any work related with the high voltage system(Refer to "High Voltage Shut-off Procedure"). Failure to follow the safety instructions may result in serious electrical injuries.

1. Install in the reverse order of removal.

Power cable mounting nut :

7.8 - 11.8 N·m (0.8 - 1.2 kgf·m, 5.8 - 8.7 lb·ft)

Ground cable mounting bolt :

10.8 - 13.7 N·m (1.1 - 1.4 kgf·m, 8.0 - 10.1 lb·ft)