2018 LEAF®

OWNER'S MANUAL

For your safety, read carefully and keep in this vehicle.

Zero Emission

FOREWORD

This manual was prepared to help you understand the operation and maintenance of your vehicle so that you may enjoy many miles of driving pleasure. Please read through this manual before operating your vehicle.

A separate Warranty Information Booklet explains details about the warranties covering your vehicle. The NISSAN Service and Maintenance Guide explains details about maintaining and servicing your vehicle. Additionally, a separate Customer Care/Lemon Law Booklet (U.S. only) will explain how to resolve any concerns you may have with your vehicle, as well as clarify your rights under your state's lemon law.

In addition to factory installed options, your vehicle may also be equipped with additional accessories installed prior to delivery. It is recommended that you visit a NISSAN certified LEAF dealer for details concerning the particular accessories with which your vehicle is equipped. It is important that you familiarize yourself with all disclosures, warnings, cautions and instructions concerning proper use of such accessories prior to operating the vehicle and/or accessory. It is recommended that you visit a NISSAN certified LEAF dealer for details concerning the particular accessories with which your vehicle is equipped.

A NISSAN certified LEAF dealer knows your vehicle best. When you require any service or have any questions, we will be glad to assist you with the extensive resources available to us.

READ FIRST — THEN DRIVE SAFELY

Before driving your vehicle, read your Owner's Manual carefully. This will ensure familiarity with controls and maintenance requirements, assisting you in the safe operation of your vehicle.

WARNING

IMPORTANT SAFETY INFORMATION REMINDERS!
Follow these important driving rules to help ensure a safe and comfortable trip for you and your passengers!

- **NEVER drive under the influence of alcohol or drugs.**
- **ALWAYS observe posted speed limits and never drive too fast for conditions.**
- **ALWAYS give your full attention to driving and avoid using vehicle features or taking other actions that could distract you.**
- **ALWAYS use your seat belts and appropriate child restraint systems. Pre-teen children should be seated in the rear seat.**

- **ALWAYS provide information about the proper use of vehicle safety features to all occupants of the vehicle.**
- **ALWAYS review this Owner's Manual for important safety information.**

MODIFICATION OF YOUR VEHICLE

This vehicle should not be modified. Modification could affect its performance, safety or durability, and may even violate governmental regulations. In addition, damage or performance problems resulting from modification may not be covered under NISSAN warranties.

WARNING

Installing an aftermarket On-Board Diagnostic (OBD) plug-in device that uses the port during normal driving, for example remote insurance company monitoring, remote vehicle diagnostics, telematics or engine reprogramming, may cause interference or damage to vehicle systems. We do not recommend or endorse the use of any aftermarket OBD plug-in devices, unless specifically approved by NISSAN. The vehicle warranty may not cover damage caused by any aftermarket plug-in device.

WHEN READING THE MANUAL

This manual includes information for all features and equipment available on this model. Features and equipment in your vehicle may vary depending on model, trim level, options selected, order, date of production, region or availability. Therefore, you may find information about features or equipment that are not included or installed on your vehicle.

All information, specifications and illustrations in this manual are those in effect at the time of printing. NISSAN reserves the right to change specifications, performance, design or component suppliers without notice and without obligation. From time to time, NISSAN may update or revise this manual to provide Owners with the most accurate information currently available. Please carefully read and retain with this manual all revision updates sent to you by NISSAN to ensure you have access to accurate and up-to-date information regarding your vehicle. Current versions of vehicle Owner's Manuals and any updates can also be found in the Owner section of the NISSAN website at **https://owners.nissanusa.com/nowners/navigation/manualsGuide**. If you have

questions concerning any information in your Owner's Manual, contact NISSAN Consumer Affairs. For contact information, refer to the NISSAN CUSTOMER CARE PROGRAM page in this Owner's Manual.

IMPORTANT INFORMATION ABOUT THIS MANUAL

You will see various symbols in this manual. They are used in the following ways:

WARNING

This is used to indicate the presence of a hazard that could cause death or serious personal injury. To avoid or reduce the risk, the procedures must be followed precisely.

CAUTION

This is used to indicate the presence of a hazard that could cause minor or moderate personal injury or damage to your vehicle. To avoid or reduce the risk, the procedures must be followed carefully.

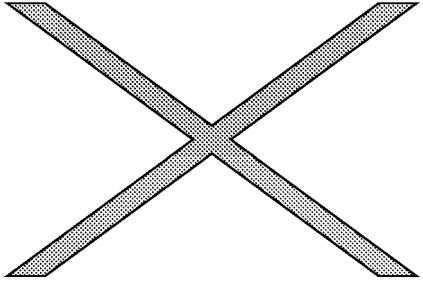

If you see the symbol above, it means **"Do not do this"** or **"Do not let this happen"**.

If you see a symbol similar to those above in an illustration, it means the arrow points to the front of the vehicle.

Arrows in an illustration that are similar to those above indicate movement or action.

Arrows in an illustration that are similar to those above call attention to an item in the illustration.

[ ]: Indicates a key/item displayed on the screen.

CALIFORNIA PROPOSITION 65 WARNING

WARNING

Certain vehicle components contain or emit chemicals known to the State of California to cause cancer and birth defects or other reproductive harm. In addition, certain fluids contained in vehicles and certain products of component wear contain or emit chemicals known to the State of California to cause cancer and birth defects or other reproductive harm.
Operating, servicing and maintaining a passenger vehicle or off-road vehicle can expose you to chemicals including engine exhaust, carbon monoxide, phthalates, and lead, which are known

to the State of California to cause cancer and birth defects or other reproductive harm. To minimize exposure, avoid breathing exhaust, do not idle the engine except as necessary, service your vehicle in a well-ventilated area and where gloves or wash your hands frequently when servicing your vehicle. For more information go to www.P65Warnings.ca.gov.

CALIFORNIA PERCHLORATE ADVISORY

Some vehicle parts, such as lithium batteries, may contain perchlorate material. The following advisory is provided: "Perchlorate Material - special handling may apply. For additional information, refer to www.dtsc.ca.gov/hazardouswaste/perchlorate."

Bluetooth® is a trademark owned by Bluetooth SIG, Inc. and licensed to Visteon.

SiriusXM® services require a subscription after trial period and are sold separately or as a package. The satellite service is available only in the 48 contiguous USA and DC. SiriusXM® satellite service is also available in Canada; see www.siriusxm.ca.

© 2017 NISSAN NORTH AMERICA, INC.

All rights reserved. No part of this Owner's Manual may be reproduced or stored in a retrieval system, or transmitted in any form, or by any means, electronic, mechanical, photocopying, recording or otherwise, without the prior written permission of Nissan North America, Inc.

NISSAN CUSTOMER CARE PROGRAM

NISSAN CARES ...

Both NISSAN and your NISSAN certified LEAF dealer are dedicated to serving all your automotive needs. Your satisfaction with your vehicle and your NISSAN certified LEAF dealer are our primary concerns. Your NISSAN certified LEAF dealer is always available to assist you with all your automobile sales and service needs.

However, if there is something that your NISSAN certified LEAF dealer cannot assist you with or you would like to provide NISSAN directly with comments or questions, please contact the NISSAN Consumer Affairs Department using our toll-free number:

For U.S. customers
1-877-NOGASEV
(1-877-664-2738)
For Canadian customers
1-800-387-0122

The Consumer Affairs Department will ask for the following information:

- Your name, address, and telephone number
- Vehicle identification number (attached to the top of the instrument panel on the driver's side)
- Date of purchase
- Current odometer reading
- Your NISSAN certified LEAF dealer's name
- Your comments or questions

OR

You can write to NISSAN with the information at:

For U.S. customers
Nissan North America, Inc.
Consumer Affairs Department
P.O. Box 685003
Franklin, TN 37068-5003
or via e-mail at:
nnaconsumeraffairs@nissan-usa.com
For Canadian customers
Nissan Canada Inc.
5290 Orbitor Drive
Mississauga, Ontario L4W 4Z5
or via e-mail at:
information.centre@nissancanada.com

If you prefer, visit us at:

www.nissanusa.com (for U.S. customer) or

www.nissan.ca (for Canadian customers)

We appreciate your interest in NISSAN and thank you for buying a quality NISSAN vehicle.

NOTES

Table of contents

Illustrated table of contents	0
EV Overview	EV
Charging	CH
Safety–Seats, seat belts and supplemental restraint system	1
Instruments and controls	2
Pre-driving checks and adjustments	3
Monitor, climate, audio, phone and voice recognition systems	4
Starting and driving	5
In case of emergency	6
Appearance and care	7
Maintenance and do-it yourself	8
Technical and consumer information	9
Index	10

0 Illustrated table of contents

Seats, seat belts and Supplemental Restraint System (SRS) 0-2
Exterior front 0-3
Exterior rear 0-4
Passenger compartment 0-5
Cockpit 0-3
Instrument panel 0-5
Meters and gauges 0-6
Motor compartment 0-10
Warning and indicator lights 0-11

SEATS, SEAT BELTS AND SUPPLEMENTAL RESTRAINT SYSTEM (SRS)

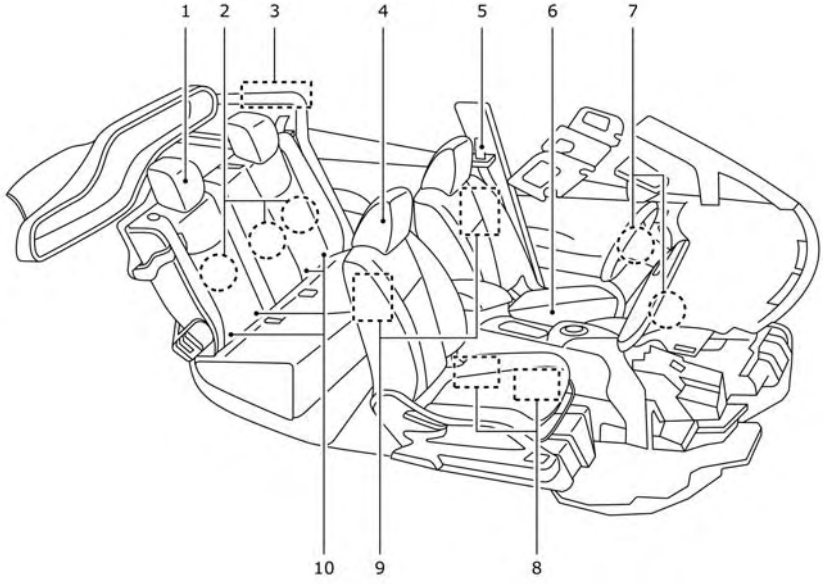

1. Rear head restraints/headrests (P. 1-7)
2. Child restraint anchor points (for top tether strap child restraint) (P. 1-22)
3. Roof-mounted curtain side-impact and rollover air bags (P. 1-43)
4. Front head restraints/headrests (P. 1-7)
5. Front seat belt with pretensioner(s) and shoulder height adjuster (P. 1-11, 1-43)
6. Front seats (P. 1-2)
7. Supplemental front-impact air bags (P. 1-43)
8. Occupant classification sensor (weight sensor) (P. 1-43)
9. Front seat-mounted side-impact supplemental air bags (P. 1-43)
10. LATCH (Lower Anchors and Tethers for CHildren) system (P. 1-22)

EXTERIOR FRONT

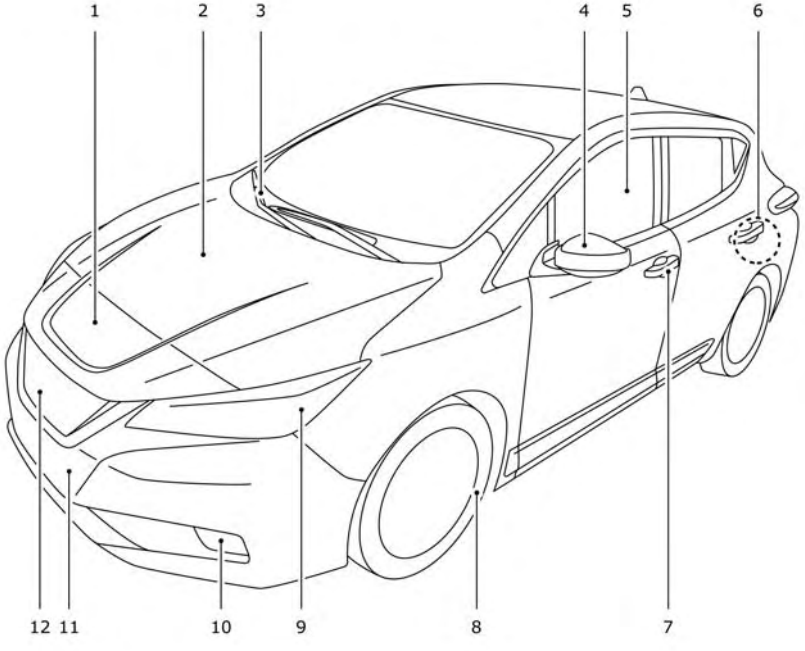

1. Charge port lid
   —Charging lid switch (P. 3-19)
2. Hood (P. 3-16)
3. Wiper and washer switch
   — Switch operation (P. 2-49)
   — Blade replacement (P. 8-14)
   — Windshield-washer fluid (P. 8-11)
4. Outside mirrors
   — Switch operation (P. 3-23)
   — Side camera (if so equipped) (P. 4-13)
5. Power windows (P. 2-68)
6. Child safety rear door lock (P. 3-4)
7. Doors
   — Keys (P. 3-2)
   — Door locks (P. 3-4)
   — NISSAN Intelligent Key® system (P. 3-6)
   — Security system (P. 2-46)
8. Tires
   — Wheels and tires (P. 8-28, 9-5)
   — Flat tire (P. 6-3)
   — Tire Pressure Monitoring System (TPMS) (P. 2-20, 5-4)
9. Headlight and turn signal lights
   — Switch operation (P. 2-52)
   — Bulb replacement (P. 8-24)
   — LED Daytime Running Lights (DRL) (if so equipped) (P. 2-52)
10. Fog lights (if so equipped)
    — Switch operation (P. 2-52)
    — Bulb replacement (P. 8-24)
11. License plate installation (P. 9-8)
12. Front view camera (if so equipped) (P. 4-13)

EXTERIOR REAR

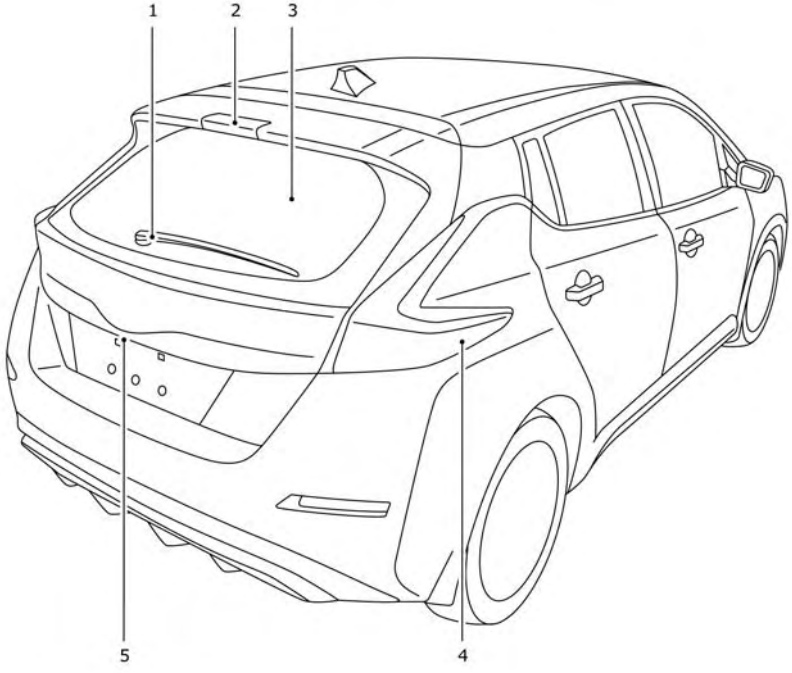

1. Rear wiper and washer switch
   — Switch operation (P. 2-49)
   — Windshield-washer fluid (P. 8-11)
2. High-mounted stop light
   — Bulb replacement (P. 8-24)
3. Rear window defroster (P. 2-51)
4. Rear combination lights
   — Bulb replacement (P. 8-24)
5. Rear hatch (P. 3-17)
   — Rear view camera (P. 4-4, 4-13)

PASSENGER COMPARTMENT

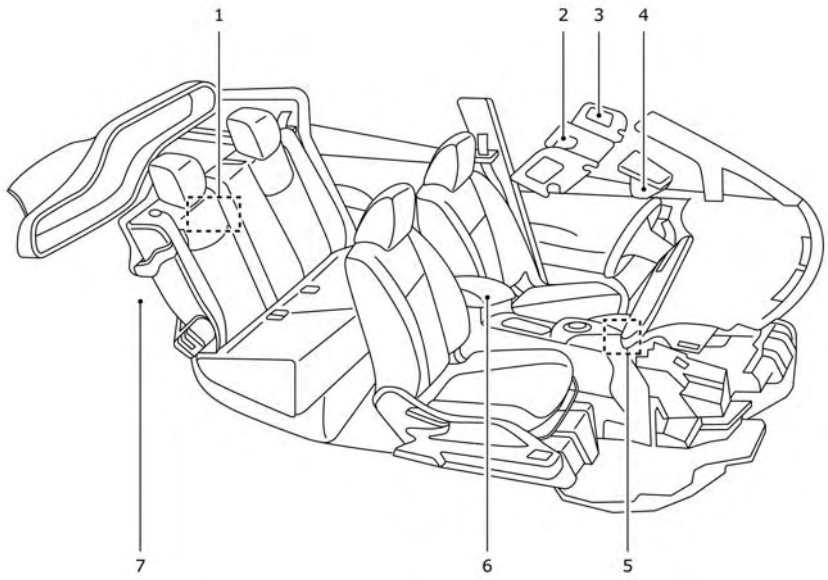

1. Emergency tire puncture repair kit (P. 6-3)
2. Map lights
   — Switch operation (P. 2-70)
   — Bluetooth® Hands-Free Phone System (without Navigation) microphone (P. 4-67)
   — Bluetooth® Hands-Free Phone System (with Navigation) microphone (Refer to NissanConnect® Manual (for Leaf))
   — Sunglasses holder (P. 2-63)
3. Sun visors (P. 3-22)
4. Mirror
   — Inside rearview mirror (P. 3-23)
   — HomeLink® (if so equipped) (P. 2-72)
5. Front cup holders (P. 2-63)
6. Console box (P. 2-63)
7. Cargo area
   — Tonneau cover (if so equipped) (P. 2-63)
   — EVSE (Electric Vehicle Supply Equipment) (P. CH-42)

COCKPIT

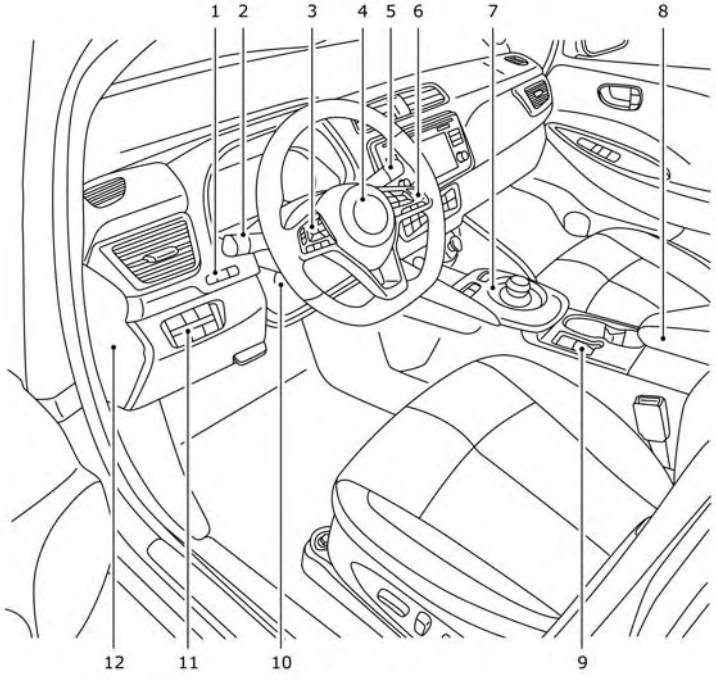

1. TRIP RESET switch for twin trip odometer (P. 2-6)
   — Instrument brightness control switch (P. 2-57)
2. Headlight, fog light (if so equipped) and turn signal switch
   — Headlight (P. 2-52)
   — Turn signal light (P. 2-52)
   — Fog light (if so equipped) (P. 2-52)
3. Steering-wheel-mounted controls (left side)
   — Audio control (P. 4-45)
   — Bluetooth® Hands-Free Phone System control (without navigation) (P. 4-45)
   — Bluetooth® Hands-Free Phone System control (with navigation) (Refer to NissanConnect® Manual (for Leaf))
4. Steering wheel
   — Power steering system (P. 5-133)
   — Horn (P. 2-58)
   — Driver's supplemental air bag (P. 1-43)
5. Wiper and washer switch (P. 2-49)
6. Steering-wheel-mounted controls (right side)
   — Cruise control switches (if so equipped) (P. 5-54)
   — Intelligent Cruise Control (ICC) switches (if so equipped) (P. 5-56)
   — ProPILOT ™ Assist switch (if so equipped) (P. 5-79)

7. Shift lever (P. 5-15)
— ECO switch (P. 2-58)
— e-Pedal switch (P. 5-22)
8. Console box (P. 2-63)
9. Parking brake (switch type) (if so equipped) (P. 5-19)
10. Tilting steering wheel lever (P. 3-21)
11. Charge port lid switch (P. 3-19)
— Charge timer OFF switch (P. 2-61)
— Heated steering wheel switch (if so equipped) (P. 2-60)
— Steering Assist switch (if so equipped) (P. 5-79)
12. Fuse box cover (P. 8-17)

INSTRUMENT PANEL

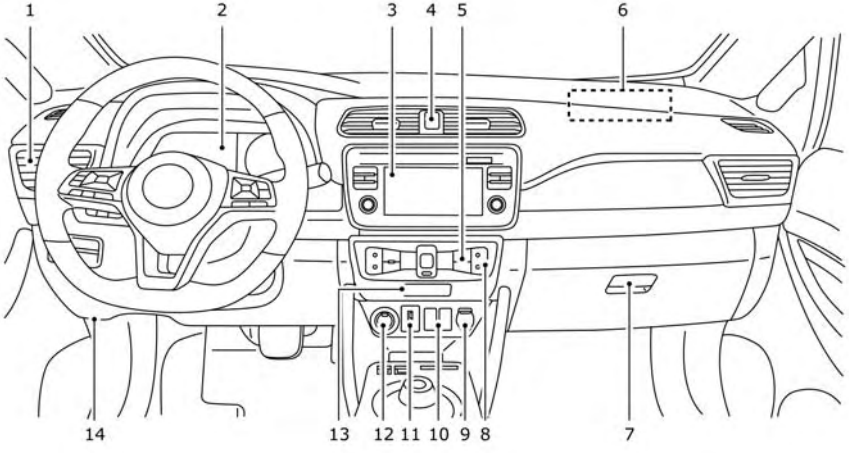

1. Vents (P. 4-29)
2. Meters and gauges (P. 2-6)
3. Center multi-function control panel
   — Navigation system (Refer to NissanConnect® Manual (for Leaf))
   — Without Navigation System (P. 4-45)
4. Hazard warning flasher switch (P. 6-2)
5. Rear window defroster switch (P. 2-51)
6. Front passenger supplemental air bag (P. 1-43)
7. Glove box (P. 2-63)
8. Heater and air conditioner control (P. 4-30)
9. Power outlet (P. 2-62)
10. Front heated seat switches (if so equipped) (P. 2-59)
11. Auxiliary input jack (P. 4-64)
    — iPod® connector/USB connector (P. 4-45)
12. Push-button power switch (P. 5-10)
13. Front passenger air bag status light (P. 1-43)
14. Hood release handle (P. 3-16)

METERS AND GAUGES

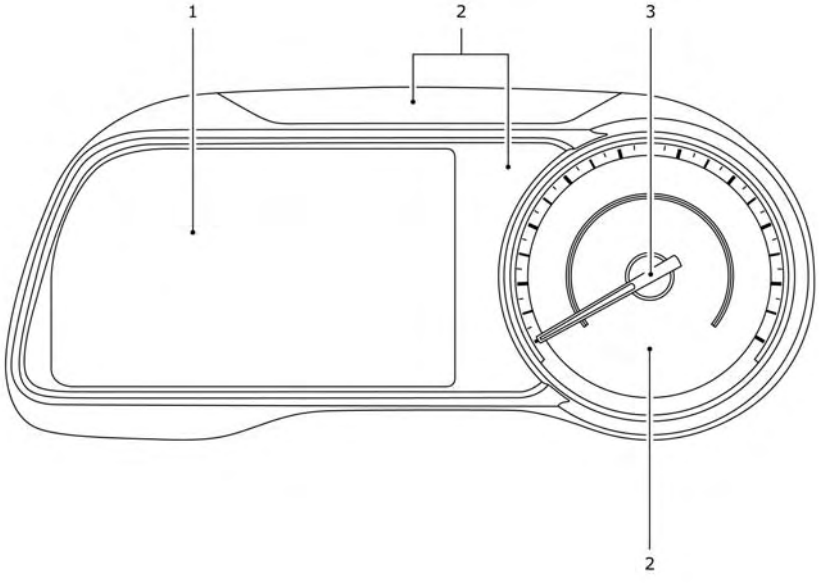

1. Vehicle information display (P. 2-27)
   — Clock (P. 2-12)
   — Outside air temperature (P. 2-11)
   — Li-ion battery available charge gauge (P. 2-10)
   — Driving range (P. EV-19)
   — Odometer/twin trip odometer (P. 2-7)
   — Indicator for timer (P. CH-35)
   — Power meter (P. 2-9)
2. Warning and indicator lights (P. 2-14)
   — Turn signal/Hazard indicator light (P. 2-52)
   — READY to drive indicator light (P. 2-25)
   — ECO mode indicator (P. 2-12
3. Speedometer (P. 2-6)

MOTOR COMPARTMENT

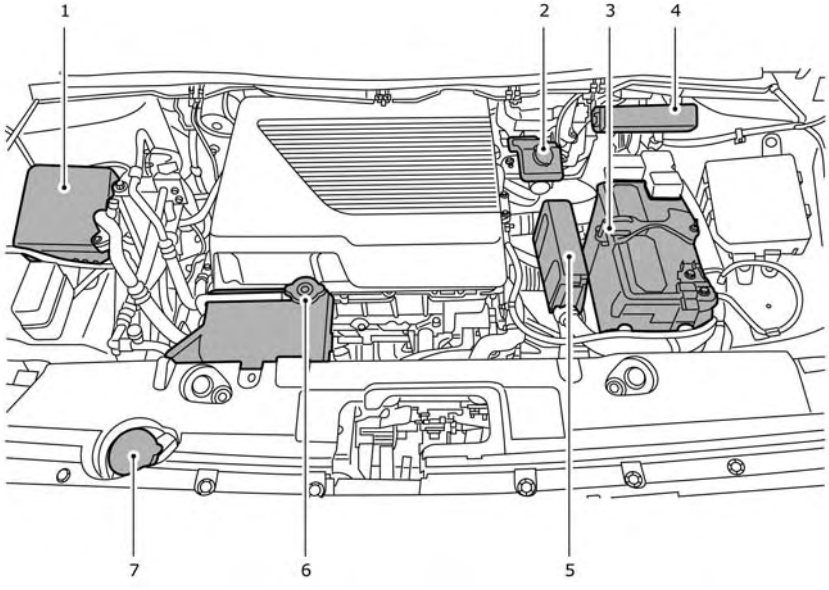

1. Fuse/Fusible link holder (P. 8-17)
2. Brake fluid reservoir (P. 8-11)
3. 12-volt battery (P. 8-12)
4. Fuse holder (P. 8-17)
5. Fuse/Fusible link holder (P. 8-17)
6. Coolant reservoir cap (P. 8-8)
7. Windshield-washer fluid reservoir (P. 8-11)

WARNING AND INDICATOR LIGHTS

Warning light	Name	Page
	12-volt battery charge warning light	2-16
ABS	Anti-lock Braking System (ABS) warning light	2-17
OFF	Approaching Vehicle Sound for Pedestrians (VSP) OFF system warning light	2-17
OFF	Automatic Emergency Braking (AEB) system warning light (if so equipped)	2-17
OFF	Automatic Emergency Braking (AEB) with Pedestrian Detection system warning light (if so equipped)	2-18

Warning light	Name	Page
	Brake system warning light (yellow)	2-18
BRAKE	Brake warning light (red)	2-19
	Electronic parking brake system warning light (yellow)	2-19
	Electric shift control system warning light	2-20
	Electric Vehicle (EV) system warning light	2-20
	Low tire pressure warning light	2-20

Warning light	Name	Page
	Master warning light (red/yellow)	2-22
	Power steering warning light	2-22
	Seat belt warning light	2-22
	Supplemental air bag warning light	2-22

Indicator light	Name	Page
(P) PARK	Electronic parking brake indicator light	2-23
	Exterior light indicator light	2-23
	Front fog light indicator light (if so equipped)	2-23
OFF	Front passenger air bag status light	2-23
A	High Beam Assist indicator light (if so equipped)	2-23
	High beam indicator light (blue)	2-24

Indicator light	Name	Page
	Plug-in indicator light	2-24
	Power limitation indicator light	2-24
	READY to drive indicator light	2-25
	Security indicator light	2-25
	Slip indicator light	2-25
	Turn signal/hazard indicator lights	2-25
OFF	Vehicle Dynamic Control (VDC) OFF indicator light	2-25

EV Overview

The EV (Electric Vehicle) system EV-2
Li-ion battery EV-2
Driving with a discharged Li-ion battery EV-3
Charging the 12-volt battery. EV-5
Li-ion battery warmer (if so equipped) EV-5
High voltage precautions. EV-7
High-voltage components. EV-7
Road accident precautions EV-8
Emergency shut-off system. EV-8
EV characteristics EV-9
Noise and vibration EV-10
Life with an EV (scene guide). EV-10
Charging the Li-ion battery. EV-10
Before driving your vehicle (models with Navigation System) EV-12
Checking Li-ion battery charging status . . .EV-12
Operating the climate control system before driving EV-13
Starting your vehicle EV-14
Driving the vehicle. EV-15
Charging after driving EV-18
Efficient use of your vehicle. EV-19
Range. EV-19
Improve driving range EV-19
Li-ion battery life EV-20
Li-ion battery maintenance EV-21
EV unique information EV-21
Meters and indicators EV-21
Approaching Vehicle Sound for Pedestrians (VSP) system. EV-24
Electric shift control system EV-25
LED headlight (low beam) (if so equipped) . .EV-25
Driving range (if so equipped) EV-25

THE EV (ELECTRIC VEHICLE) SYSTEM

The LEAF is an electric vehicle. Some of the vehicle's systems operate differently and have different operating characteristics than vehicles equipped with an internal combustion engine. It is important to carefully review the entire Owner's Manual for this reason. The main difference is the LEAF is powered by electricity. The LEAF does not require and it is not capable of using gasoline like a vehicle powered by a traditional internal combustion engine. The LEAF uses electricity stored in the lithium ion (Li-ion) battery. The vehicle's Li-ion battery must be charged with electricity before the vehicle can be driven. As the vehicle operates, the Li-ion battery gradually discharges. If the Li-ion battery becomes completely discharged, the vehicle will not operate until it is re-charged.

This vehicle uses two types of batteries. One is the 12-volt battery that is the same as the battery in vehicles powered by gasoline engines, the other is the Li-ion battery (high voltage).

The 12-volt battery provides power to the vehicle systems and features such as the audio system, supplemental restraint systems, headlights and windshield wipers.

The Li-ion battery provides power to the electric motor (traction motor) that moves the vehicle.

The Li-ion battery also charges the 12-volt battery.

The vehicle must be plugged in for the Li-ion battery to be charged. Additionally, the vehicle system can extend the vehicle range by converting driving force into electricity that is stored in the Li-ion battery while the vehicle is decelerating or being driven downhill. This is called regenerative braking. This vehicle is considered to be an environmentally friendly vehicle because it does not emit exhaust gases, such as carbon dioxide and nitrogen oxide.

LI-ION BATTERY

WARNING

Your vehicle contains a sealed Li-ion high voltage battery. If the Li-ion battery is disposed of improperly, there is a risk of severe burns and electrical shock that may result in serious injury or death and there is also a risk of environmental damage.

CAUTION

To prevent damage to the Li-ion battery:

- **Do not expose the vehicle to extreme ambient temperatures for extended periods.**
- **Do not store the vehicle in temperatures below −13°F (−25°C) for more than seven days.**
- **Do not leave the vehicle for more than 14 days where the Li-ion battery available charge gauge reaches a zero or near zero.**
- **Do not use the Li-ion battery for any other purpose.**

NOTE:

- **If the outside temperature is –13°F (–25°C) or less, the Li-ion battery may freeze and it cannot be charged or provide power to run the vehicle. Move the vehicle to a warm location.**
- **The capacity of the Li-ion battery in your vehicle to hold a charge will, like all such batteries, decrease with time and usage. As the battery ages and capacity decreases, this will result in a decrease from the vehicle's initial mileage range. This is normal, expected, and not indicative of any defect in your Li-ion battery.**
- **The Li-ion battery has limited service life, and when its charging capacity falls below a specific level, the EV system warning light will illuminate. Owners should bring their vehicle in for inspection and possible battery replacement.**
- **It is recommended that you visit a NISSAN certified LEAF dealer for information about recycling or disposal of the Li-ion battery. Do not attempt to recycle or dispose of the Li-ion battery yourself.**

DRIVING WITH A DISCHARGED LI-ION BATTERY

When a destination is set in the navigation system (if so equipped) that exceeds the available vehicle range, the navigation system automatically searches the location of nearby charging stations. When the nearby charging station locations are displayed, charge the Li-ion battery as soon as possible.

Warning lights illuminate on the instrument panel and messages are displayed on the vehicle information display to inform you that the Li-ion battery charge is low. Instructions are also displayed on the navigation system screen (if so equipped) to direct you to nearby charging stations.

The vehicle's range is very limited when these warning lights illuminate and messages are displayed. Follow the instructions on the navigation system screen (if so equipped) and immediately charge the vehicle at the nearest charging station.

There are three levels of information that will be displayed as the Li-ion battery becomes discharged:

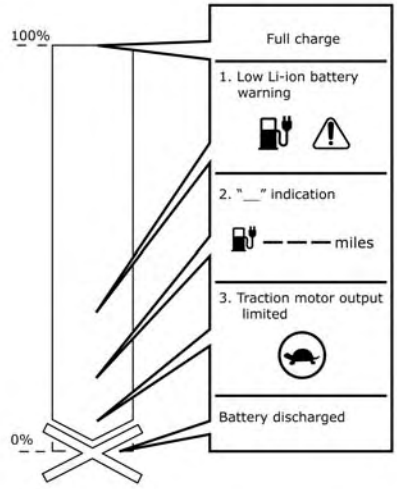

1. The following warning lights illuminate on the instrument panel and messages are displayed on the vehicle information display at the same time to indicate low Li-ion battery charge:

- The low battery charge indicator light
- The master warning light
- The "Battery charge is low, Charge now" warning message is displayed on the vehicle information display.
- Messages are displayed on the navigation system screen (if so equipped).
- For additional information, refer to "Low battery charge indicator" in the "Instruments and controls" section of this manual.

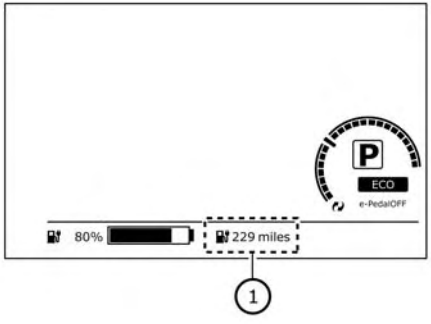

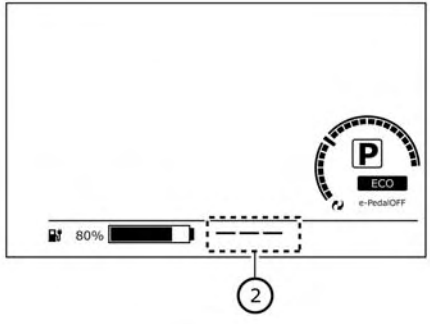

- The driving range flashes ①.

NOTE:
Due to traffic conditions, it may be difficult to get to the charging station suggested by the navigation system (if so equipped). If the Li-ion battery is almost completely discharged, drive directly to the nearest charging station.

2. If the vehicle is driven and the Li-ion battery continues to discharge, the driving range on the instrument panel changes to "— — —" ②.

   Messages are displayed on the navigation system screen (if so equipped). For additional information, refer to "Li-ion battery available charge gauge" in the "Instruments and controls" section of this manual.

3. When the power limitation indicator light illuminates, traction motor output is limited resulting in reduced vehicle speed. Stop the vehicle in a safe

location before the Li-ion battery becomes completely discharged and there is no power available to drive the vehicle. Contact Roadside Assistance Service shown in your NISSAN Warranty Information Booklet. For additional information, refer to "If the Li-ion battery becomes completely discharged" in the "In case of emergency" section of this manual.

CHARGING THE 12-VOLT BATTERY

The 12-volt battery is charged automatically using electricity stored in the Li-ion battery.

When the 12-volt battery is being charged, the charge status indicator light on the instrument panel flashes (except when charging the Li-ion battery or the power switch is in the Ready to Drive position). For additional information, refer to "Charging status indicator lights" in the "Charging" section of this manual.

While vehicle is driven

The Li-ion battery charges the 12-volt battery as necessary when the power switch is in the Ready to Drive position or ON position.

The 12-volt battery is not charged in the following conditions.

- When the power switch is in the ACC position.
- When the power switch is in the ON position and the shift position is in the N (Neutral) position.

While the vehicle is not in use

When the EV system is off for an extended time, the 12-volt battery may be automatically charged for a short period of time on a regular basis.

LI-ION BATTERY WARMER (IF SO EQUIPPED)

CAUTION

The Li-ion battery warmer does not operate if the available Li-ion battery charge is less than approximately 15% and the charger is not connected to the vehicle. To help prevent the Li-ion battery from freezing, do not leave the vehicle in an environment if temperatures may go below -1°F (-17°C) unless the vehicle is connected to a charger.

The Li-ion battery warmer helps to prevent the Li-ion battery from freezing and helps to prevent significant reductions in the Li-ion battery output when the temperature is cold. The Li-ion battery warmer automatically turns on when the Li-ion battery temperature is approximately -1°F (-17°C) or colder. The Li-ion battery warmer automatically turns off when the Li-ion battery temperature is approximately 14°F (-10°C) or higher.

The Li-ion battery warmer uses electrical power from an external source when a charger is connected to the vehicle. The Li-ion battery warmer uses electrical power from the Li-ion battery when the charger is not connected to the vehicle.

NOTE:

- **Connect the charger to the vehicle and place the power switch in the OFF position when parking the vehicle if temperatures may go below -1°F (-17°C). This provides external power to the Li-ion battery warmer when it operates and does not discharge the Li-ion battery.**
- **The charging status indicator lights illuminate in a specific pattern when the Li-ion battery warmer operates. The charging status indicator lights use the same pattern to indicate 12-volt battery charging, Climate Ctrl. Timer operation or Remote Climate Control operation (models with Navigation System). The charging status indicator lights do not change if the Li-ion battery warmer operates at the same time as the above features. For additional information, refer to "Charging status indicator lights" in the "Charging" section of this manual.**
- **The Li-ion battery warmer uses Li-ion battery power to operate, even if the vehicle is connected to a charger when:**
  - **The vehicle's power switch is in the ON position.**
  - **There is no electrical power being supplied to the charging equipment.**
- **When the Li-ion battery warmer is already in operation using an external power source, it will continue to use the external power even if the power switch is placed in the ON position.**
- **Vehicle driving range is reduced if the Li-ion battery warmer operates (Li-ion battery temperature approximately -1°F (-17°C) or colder) while driving the vehicle. You may need to charge the Li-ion battery sooner than in warmer temperatures.**
- **The Li-ion battery requires more time to charge when the Li-ion battery warmer operates.**
- **The predicted charging time displayed on the meter and navigation system (if so equipped) increases when the Li-ion battery warmer operates.**
- **Climate control performance is reduced when using the Climate Ctrl. Timer or Remote Climate Control (models with Navigation System) while the Li-ion battery warmer operates.**
- **The Li-ion battery may not charge to the expected level using the charging timer while the Li-ion battery warmer operates.**

HIGH VOLTAGE PRECAUTIONS

HIGH-VOLTAGE COMPONENTS

WARNING

- **The EV system uses high voltage up to approximately DC 400 volt. The system can be hot during and after starting and when the vehicle is shut off. Be careful of both the high voltage and the high temperature. Follow the warning labels that are attached to the vehicle.**
- **Never disassemble, remove or replace high-voltage parts and cables as well as their connectors because they can cause severe burns or electric shock that may result in serious injury or death. High-voltage cables are colored orange. The vehicle high voltage system has no user serviceable parts. It is recommended that you take your vehicle to a NISSAN certified LEAF dealer for any necessary maintenance.**

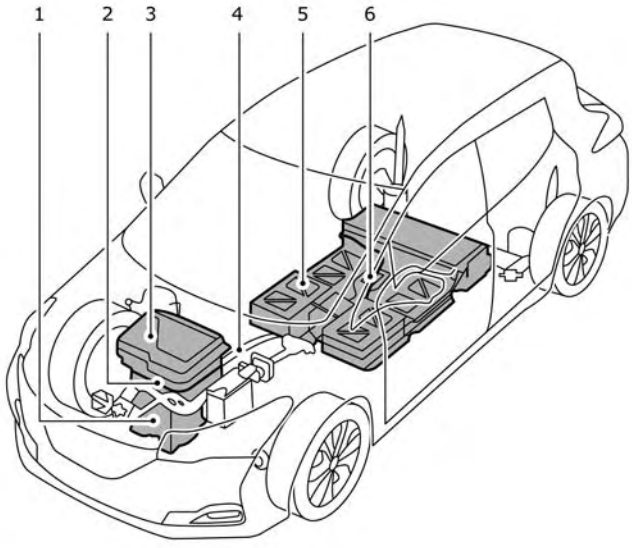

1. Traction motor and reduction gear
2. Traction motor inverter
3. Power delivery module (PDM) (Charger, DC/DC converter, junction box)
4. High-voltage wire harnesses (colored orange)
5. Li-ion battery
6. Service plug

ROAD ACCIDENT PRECAUTIONS

WARNING

In case of a collision:

- **If your vehicle is drivable, pull your vehicle off the road, push the P (Park) position switch on the shift lever, apply the parking brake and turn the EV system off.**
- **Check your vehicle to see if there are exposed high-voltage parts or cables. For their locations, refer to "High voltage components" in this section. To avoid personal injury, never touch high-voltage wiring, connectors, and other high-voltage parts, such as inverter unit and Li-ion battery. An electric shock may occur if exposed electric wires are visible when viewed from inside or outside of your vehicle. Therefore, never touch exposed electric wires.**
- **If the vehicle receives a strong impact to the floor while driving, stop the vehicle in a safe location and check the floor.**
- **Leaks or damage to the Li-ion battery may result in a fire. If you discover them, contact emergency services immediately. Since the fluid leak may be lithium manganate from the Li-ion battery, never touch the fluid leak inside or outside the vehicle. If the fluid contacts your skin or eyes, wash it off immediately with a large amount of water and receive immediate medical attention to help avoid serious injury.**
- **If a fire occurs in the EV, leave the vehicle as soon as possible. Only use a type ABC, BC or C fire extinguisher that is meant for use on electrical fires. Using a small amount of water or the incorrect fire extinguisher can result in serious injury or death from electrical shock.**
- **If your vehicle needs to be towed, do it with the front wheels raised. If the front wheels are on the ground when towing, the traction motor may generate electricity. This may damage the components of the EV system and cause a fire.**
- **If you are not able to safely assess the vehicle due to vehicle damage, do not touch the vehicle. Leave the vehicle and contact emergency services. Advise first responders that this is an electric vehicle.**
- **In the event of an accident that requires body repair and painting, the Li-ion battery pack and high voltage parts such as the inverter, including the wire harness, should be removed prior to painting. It is recommended that you visit a NISSAN certified LEAF dealer for this service. Li-ion battery packs exposed to heat in the paint booth will experience capacity loss. Damaged Li-ion battery packs may also pose safety risks to untrained mechanics and repair personnel.**

EMERGENCY SHUT-OFF SYSTEM

The emergency shut-off system is activated and the high-voltage system automatically turns off in the following conditions:

- Front and side collisions in which the air bags are deployed.

- Certain rear collisions.

- Certain EV system malfunctions.

For the above collisions and certain other EV system malfunctions, the Ready to Drive indicator light will turn off. For additional

information, refer to "Warning lights, indicator lights and audible reminders" in the "Instruments and controls" section of this manual.

The emergency shut-off activates for the above collisions to minimize risk of an event that could cause injury or an accident. If the emergency shut-off system activates, the EV system may not be switched to the Ready to Drive position; it is recommended that you visit a NISSAN certified LEAF dealer. Even if the power switch is switched to the Ready to Drive position, the system may shut-off suddenly. Therefore, drive cautiously to the nearest certified repair facility; it is recommended that you visit a NISSAN certified LEAF dealer for service.

EV CHARACTERISTICS

WARNING

- **Pay special attention to pedestrians. Because there is no engine noise, pedestrians may not know the vehicle is approaching, moving or about to move, and may step into the path of vehicle travel.**
- **When leaving the vehicle, be sure to turn off the EV system.**
- **Be sure to push the P (Park) position switch on the shift lever and apply the parking brake when parking because the vehicle can move when the Ready to Drive indicator light is ON. When the Ready to Drive indicator light is ON, do not leave your vehicle in a shift position other than the P (Park) position.**
- **Keep the brake pedal depressed until you are ready to drive. When the vehicle is in the D (Drive) position, B or R (Reverse) position, if you release the brake pedal and do not depress the accelerator, the vehicle will creep and may start abruptly. This may cause serious injury or death.**

NOTE:

- **The vehicle cannot run with a discharged Li-ion battery. Repeated acceleration consumes more power from the Li-ion battery than driving at a steady speed.**
- **This vehicle is equipped with a regenerative brake system. The primary purpose of the regenerative brake system is to provide some power to recharge the Li-ion battery and extend driving range. A secondary benefit is "engine braking" that operates based on Li-ion battery conditions.**
- **In the D (Drive) position, when the accelerator pedal is released, the regenerative brake system provides some deceleration.**
- **When you put the shift lever in the B mode and take your foot off the accelerator pedal, more regenerative brake is applied than in the D (Drive) position.**
- **Less deceleration is provided by the regenerative brake system when the Li-ion battery is fully charged. The regenerative brake is automatically reduced when the Li-ion battery is fully charged**

to prevent the Li-ion battery from becoming overcharged. The regenerative brake is also automatically reduced when the battery temperature is high/low (indicated by the red/blue zones on the Li-ion battery temperature gauge) to prevent Li-ion battery damage.

- **The brake pedal should be used to slow or stop the vehicle depending on traffic or road conditions. The vehicle brakes are not affected by the regenerative brake system operation.**

NOISE AND VIBRATION

You might experience the following noise or vibration as a normal characteristic of this vehicle:

- Traction motor noise from the motor compartment.
- Water pump and radiator fan noise while charging.
- Compressor and radiator fan noise when the Climate Ctrl. Timer or remote climate control (models with Navigation System) is used.
- Relay operation noise and vibration at start-up and shut-down of the EV system (power switch placed in the ON and OFF position).
- Approaching Vehicle Sound for Pedestrians (VSP).

LIFE WITH AN EV (SCENE GUIDE)

This section provides a brief explanation for the most important LEAF functions. For additional information, refer to the specific sections of this manual for detailed explanations of the vehicle features and operation.

CHARGING THE LI-ION BATTERY

WARNING

The EV system uses a high voltage current. Failure to follow the proper handling instructions may cause serious injury or death. Be sure to read the "Charging" section and follow the procedures and guidelines described.

	Charge port	Charge connector	Control box	Power	Charging
NORMAL CHARGE (AC 220-240 volt)	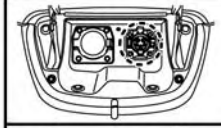	Normal charge connector			Use the charging device (AC 220-240 volt) that is installed in your home.
	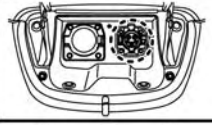	Normal charge connector	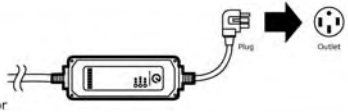		Use the L1 & L2-EVSE. Use only a 220-240 volt, 50 amp, dedicated outlet installed by a qualified electrician.
TRICKLE CHARGE (AC 110-120 volt)	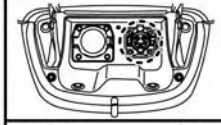	Normal charge connector	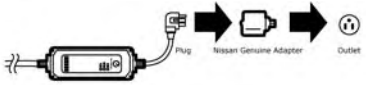		Use the L1 & L2-EVSE. Use only a 110-120 volt, 15 amp, dedicated outlet installed by a qualified electrician.
	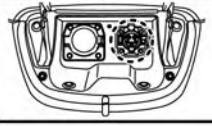	Normal charge connector			Use the L1-EVSE. Use only a 110-120 volt, 15 amp, dedicated outlet installed by a qualified electrician.
QUICK CHARGE (If so equipped) See "CH. How to quick charge" in the "CH. Charging" section.		Quick charge connector			Public charging stations

BEFORE DRIVING YOUR VEHICLE (MODELS WITH NAVIGATION SYSTEM)

The Li-ion battery charging status and the Li-ion battery warmer (if so equipped) operation can be checked using an internet enabled smart phone or personal computer at home. You may also choose to have SMS messages (text messages) sent to a cellular phone. Additionally, the vehicle's heater and air conditioner can be set to operate using the Climate Ctrl. Timer function or A/C-heater remote function, if necessary. For additional information, refer to "Remote climate control" in the "Monitor, climate, audio, phone and voice recognition systems" section of this manual.

NOTE:

- **To check the Li-ion battery charging status or to use the remote heater and air conditioner using an internet enabled smart phone or personal computer, the following conditions must be met:**
  - **The vehicle must be located in a cellular phone or smart phone coverage area.**
  - **The internet enabled cellular phone or smart phone must be located in a cellular phone or smart phone coverage area.**
  - **The computer must be connected to the internet.**
  - **A cellular phone must be used to communicate with the vehicle.**
  - **A cellular phone capable of text messaging must be used to receive text message regarding vehicle charge status.**
- **The remote heater and cooler can adjust the in-cabin temperature.**
- **When the charge connector is disconnected from the vehicle, the heater and air conditioner operates using vehicle Li-ion battery electric power.**
- **If the remote heater and air conditioner function and Li-ion battery charging are performed at the same time, Li-ion battery charging will take longer than usual due to the power used to heat or cool the vehicle.**

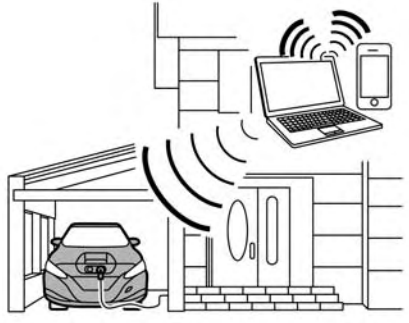

CHECKING LI-ION BATTERY CHARGING STATUS

The Li-ion battery charge status can be checked on the NISSAN Data Center website via an internet enabled smart phone or personal computer.

If the Li-ion battery is not sufficiently charged, you can start charging the Li-ion battery via the remote charge function. For additional information, refer to "Charging related remote function" in the "Charging" section of this manual.

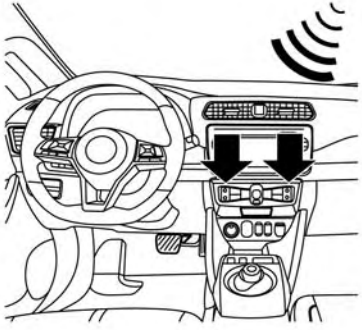

OPERATING THE CLIMATE CONTROL SYSTEM BEFORE DRIVING

The vehicle's heating and air conditioning system can be turned on via remote control with an internet enabled smart phone or personal computer.

This allows the interior of the vehicle to be heated or cooled while the vehicle is charging. This reduces the load on the Li-ion battery while the vehicle is being driven and can help increase the vehicle driving range. For additional information, refer to "Remote climate control" in the "Monitor, climate, audio, phone and voice recognition systems" section of this manual.

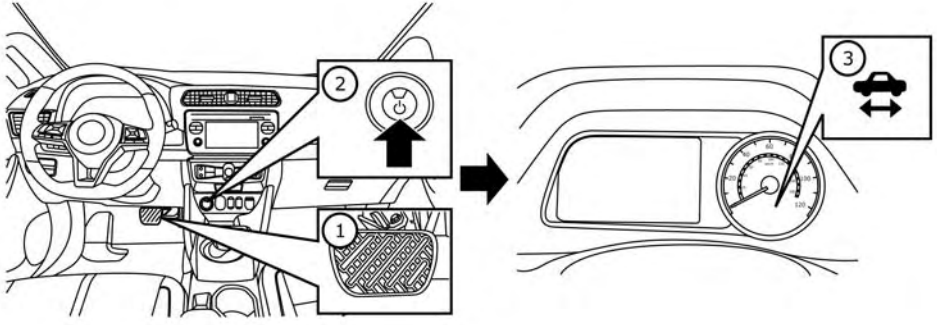

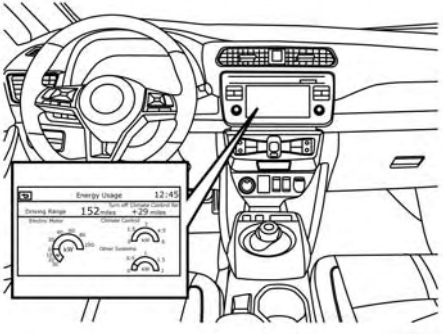

1. Depress the brake pedal.
2. Push the power switch.
3. Check that the Ready to Drive indicator light illuminates. For additional information, refer to "Ready to drive indicator light" in the "Instruments and controls" section of this manual.
4. For models with Navigation System: If route guidance is necessary, enter the destination in the navigation system. For additional information, refer to the LEAF Navigation System Owner's Manual.
5. Check the Li-ion battery level and the estimated driving range shown on the meter. For additional information, refer to "Driving range" in the "Instruments and controls" section of this manual.

NOTE:

- **Before driving, compare the driving distance to the destination displayed on the navigation system screen (if so equipped) with the estimated driving range shown on the meter. Determine if it will be necessary to charge the Li-ion battery before or while driving to your planned destination.**
- **If it is necessary to charge the Li-ion battery, use the navigation system (if so equipped) to search for available charging stations on your planned driving route.**

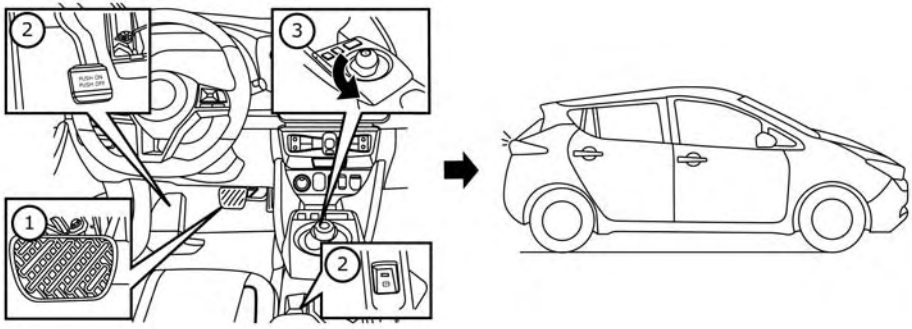

DRIVING THE VEHICLE

1. Depress the brake pedal.
2. Release the parking brake.
3. Move the shift lever into the D (Drive) position. When released, the shift lever returns to its original center position.
4. Confirm that the vehicle is in the D (Drive) position. The indicator next to the "D" by the shift lever illuminates and "D" is displayed on the meter.
5. Release the brake pedal.
6. Depress the accelerator pedal and start driving.

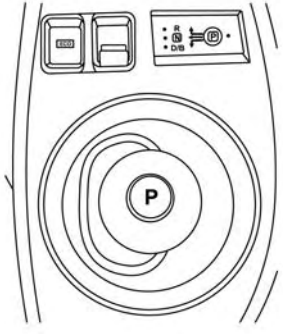

These are the following gear positions for driving the vehicle forward:

- Use the D (Drive) position for optimum driving performance.
- Use the B mode for downhill driving. When the B mode is used, more regenerative brake is applied when the accelerator pedal is released in comparison to the D (Drive) position.

For additional information, refer to "Driving the vehicle" in the "Starting and driving" section of this manual.

NOTE:
The regenerative brake converts the vehicle's forward motion to electric power to help slow the vehicle.

Use the ECO mode for maximum vehicle range and for city driving. The ECO mode helps reduce power consumption by reducing acceleration when compared to the same accelerator pedal position in the D (Drive) position.

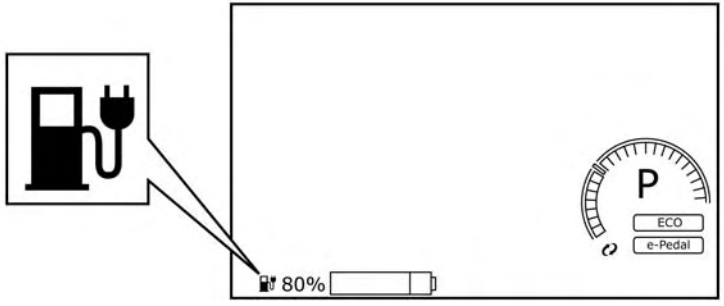

If the low battery charge indicator illuminates yellow, the Li-ion battery charge is too low for travel. For additional information, refer to "Li-ion battery available charge gauge" in the "Instruments and controls" section of this manual. Charge the Li-ion battery as soon as possible.

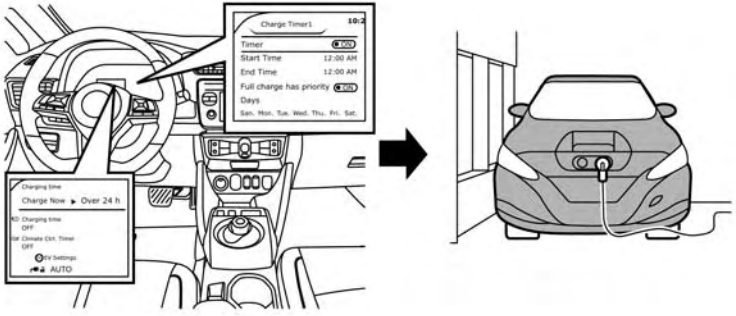

CHARGING AFTER DRIVING

Charging the Li-ion battery

When you return home, connect the vehicle to the charging device installed at your home or the EVSE plugged to outlet using the normal charge connector.

Charge the vehicle or set the charging timer function to have the vehicle charge at a specific time. For additional information, refer to "Charging timer" in the "Charging" section of this manual.

1. When the power switch is turned off, the settings of the charging timer, and the Climate Ctrl. Timer and the charge connector lock functions are displayed on the vehicle information display. For additional information, refer to "Vehicle information display" in the "Instruments and controls" section of this manual.
2. Open the charge port lid and charge port cap. For additional information, refer to "Charge port lid" in the "Pre-driving checks and adjustments" section of this manual.
3. Connect the charge connector to the vehicle.
4. When the charging timer is turned on, charging starts at the set time. When the charging timer is not turned on, charging starts immediately.

NOTE:

- **Charging can be started remotely, even if the charging timer is set up.**
- **When you have forgotten to connect the charge connector at home, there is a function that can notify you via a text message capable cellular phone, internet enabled smart phone or personal computer. For additional information, refer to "Charging related remote function" in the "Charging" section of this manual (models with Navigation System).**
- **NISSAN recommends that you connect the normal charge cable when getting out of the vehicle, even if it is not going to be used. By doing this, you can get the most out of the remote climate control (models with Navigation System) and Climate Ctrl. Timer functions the next time you use the vehicle.**

EFFICIENT USE OF YOUR VEHICLE

RANGE

The distance you can drive the vehicle (range) varies considerably depending upon available charge, weather, temperature, usage, battery age, topography, and driving style.

Refer to the Monroney label (window sticker) for the official EPA range. Your actual range can vary, either initially or as the battery ages and with use over time. For additional information, refer to "Improve driving range" in this section for information on the factors that affect vehicle range and how to use the vehicle to maximize vehicle range.

IMPROVE DRIVING RANGE

Vehicle range depends on a number of factors.

Actual vehicle range will vary depending upon:

- Speed,
- Vehicle load,
- Electrical load from vehicle accessories,
- Traffic and road conditions.

NISSAN recommends the following driving habits to help maximize vehicle range:

Before driving:

- Follow recommended periodic maintenance.
- Keep tires inflated to correct pressure.
- Keep wheels in correct alignment.
- Pre-heat or pre-cool the interior cabin while the vehicle is charging.
- Remove unnecessary cargo from the vehicle.

While driving:

- Drive in ECO mode
  - The ECO mode helps reduce power consumption by reducing acceleration when compared to the same accelerator pedal position in the D (Drive) position.
- Drive at a constant speed. Maintain cruising speeds with constant accelerator positions or by using cruise control when appropriate.
- Accelerate slowly and smoothly. Gently press and release the accelerator pedal for acceleration and deceleration.
- Drive at moderate speeds on the highway.
- Avoid frequent stopping and braking. Maintain a safe distance behind other vehicles.
- Turn off the air conditioner/heater when it is not necessary.
- Select a moderate temperature setting for heating or cooling to help reduce power consumption.
- Use the air conditioner/heater and close windows to reduce drag when cruising at highway speed.
- Vehicle range may be substantially reduced in extremely cold conditions (for example, -4°F (-20°C)).
- Using the climate control system to heat the cabin when the outside temperature is below 32°F (0°C) uses more electricity and affects vehicle range more than when using the heater when the temperature is above 32°F (0°C).

- When it is cold, use the steering wheel heater in substitution for the heater/air conditioner. The steering wheel heater consumes less power than the heater/air conditioner.
- Release the accelerator pedal to slow down and do not apply the brakes when traffic and road conditions allow.
  - This vehicle is equipped with a regenerative brake system. The primary purpose of the regenerative brake system is to provide some power to recharge the Li-ion battery and extend driving range. A secondary benefit is "engine braking" that operates based on Li-ion battery conditions. In the D (Drive) position, when the accelerator is released, the regenerative brake system provides some deceleration and some power to the Li-ion battery.

LI-ION BATTERY LIFE

The Li-ion battery's ability to hold a charge, like all batteries, decreases with battery age and usage which results in decreased vehicle range when compared to the vehicle range when the vehicle was new. This is normal and expected, and does not indicate a malfunction of the vehicle or Li-ion battery.

The Li-ion battery's ability to hold a charge can be affected by how you drive the vehicle, store the vehicle, how you charge the Li-ion battery and Li-ion battery temperature during vehicle operation and charging.

To maximize the battery's useful life, use the following driving and charging habits where possible:

- Avoid exposing a vehicle to extreme ambient temperatures for extended periods.
- Avoid storing a vehicle in temperatures below −13°F (−25°C) for more than seven days.
- Avoid leaving your vehicle for more than 14 days where the Li-ion battery available charge gauge reaches a zero or near zero (state of charge).
- Allow the vehicle and Li-ion battery to cool down after use before charging.
- Park/store your vehicle in cool locations out of direct sunlight and away from heat sources.
- Avoid sustained high battery temperatures (caused, for example, by exposure to very high ambient temperatures or extending highway driving with multiple quick charges [if so equipped]) .
- Use the normal charging or trickle charging methods to charge the Li-ion battery and minimize the use of public Fast Charge or Quick Charger.
- Moderate driving.
- Use of ECO mode.
- Do not operate the charging timer repeatedly while the charge connector is connected to the vehicle after the Li-ion battery charging is completed. Doing so may discharge the 12-volt battery.
- The power of the Li-ion battery can be checked on the Li-ion battery available charge gauge. For additional information, refer to "Li-ion battery available charge gauge" in the "Instruments and controls" section of this manual.

LI-ION BATTERY MAINTENANCE

In addition to the regular maintenance recommended by NISSAN, the LEAF requires some special Li-ion battery inspections.

- For additional information, refer to the NISSAN Warranty Information Booklet for significant limitations, exclusions and possible voiding of your warranty resulting from failure to have these necessary inspections, repairs and/or adjustments performed.
- For additional information, refer to the NISSAN Service and Maintenance Guide for a detailed explanation of the Li-ion battery inspection and intervals.

EV UNIQUE INFORMATION

METERS AND INDICATORS

Various meters and gauges related to the EV functions are displayed in the vehicle information display.

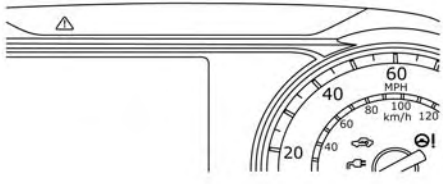

Meter

Master warning light:

The master warning light (red or yellow) illuminates when any warning lights or indicators illuminate in the display or when messages are displayed on the vehicle information display.

For additional information, refer to "Master warning light (red/yellow)" in the "Instruments and controls" section of this manual.

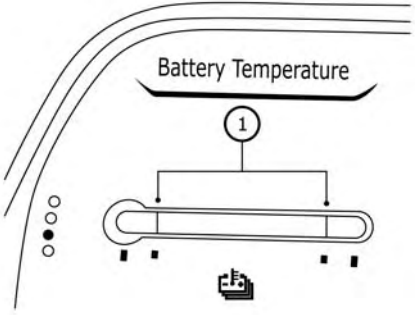

Li-ion battery temperature gauge:

This gauge displays the temperature of the Li-ion battery.

For additional information, refer to "Li-ion battery temperature gauge" in the "Instruments and controls" section of this manual.

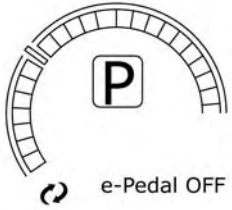

Power meter:

This meter displays the actual traction motor power consumption and the regenerative brake power provided to the Li-ion battery.

For additional information, refer to "Power meter" in the "Instruments and controls" section of this manual.

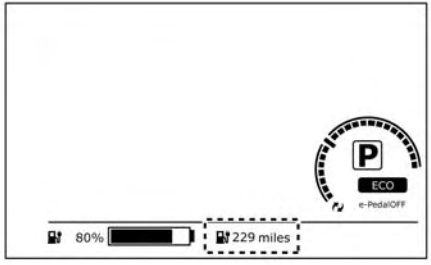

Driving range:

This indicator displays the estimated driving range (calculated based on a program that accounts for current driving style and operational conditions) that can be driven before recharging is necessary.

For additional information, refer to "Driving range" in the "Instruments and controls" section of this manual.

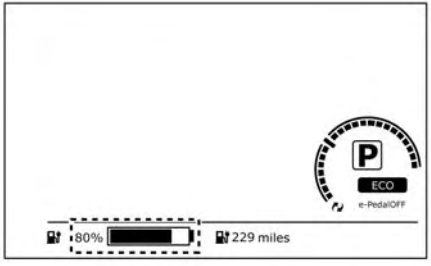

Li-ion battery available charge gauge:

This indicator displays the available Li-ion battery capacity remaining to drive the vehicle.

For additional information, refer to "Li-ion battery available charge gauge" in the "Instruments and controls" section of this manual.

The EV unique information is displayed on the vehicle information display as well. For additional information, refer to "Vehicle information display" in the "Instruments and controls" section of this manual.

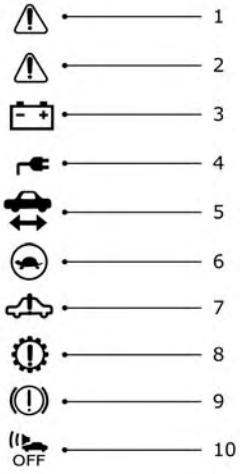

Warning and indicator lights

The EV system uses the following EV specific warning and indicator lights:

1. Master warning light (red)
2. Master warning light (yellow)
3. 12-volt battery charge warning light
4. Plug-in indicator light
5. Ready to Drive indicator light
6. Power limitation indicator light
7. EV system warning light
8. Electric shift control system warning light
9. Regenerative brake system warning light (yellow)
10. Approaching Vehicle Sound for Pedestrians (VSP) system OFF warning light

For additional information, refer to "Warning lights, indicator lights and audible reminders" in the "Instruments and controls" section of this manual.

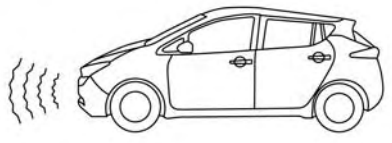

APPROACHING VEHICLE SOUND FOR PEDESTRIANS (VSP) SYSTEM

The Approaching Vehicle Sound for Pedestrians (VSP) system is a function that uses sound to alert pedestrians of the presence of the vehicle when it is being driven at a low speed.

When the vehicle starts to move, it produces a sound.

The sound stops when the vehicle speed is more than 19 mph (30 km/h) while accelerating.

The sound starts when the vehicle speed is less than 16 mph (25 km/h) while decelerating.

The sound stops when the vehicle stops.

The sound does not stop with the vehicle in the R (Reverse) position even if the vehicle stops.

WARNING

- **If the sound cannot be heard, pedestrians may not notice the oncoming vehicle, which may cause an accident resulting in serious injury or death. It is recommended that you immediately visit a NISSAN certified LEAF dealer for VSP system inspection.**
- **If the VSP system OFF warning light illuminates while the power switch is in the ON position, or in the Ready to Drive position, it may indicate the VSP system is not functioning properly. Have the VSP system checked. It is recommended that you visit a NISSAN certified LEAF dealer for this service. For additional information, refer to "Approaching Vehicle Sound for Pedestrians (VSP) system OFF warning light" in the "Instruments and controls" section of this manual.**

If you wish to make the sound of the VSP system louder, it is recommended that you visit a NISSAN certified LEAF dealer for this service. It is not possible to make the sound lower.

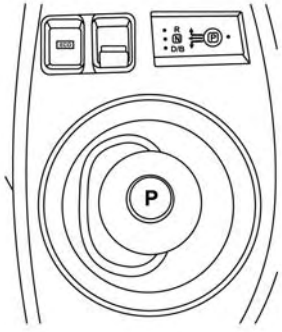

ELECTRIC SHIFT CONTROL SYSTEM

This vehicle is equipped with an electric shift control system. This control system has three features:

- Smooth and easy shift lever operation.
- To place the vehicle in the P (Park) position, push the P (Park) position switch on the shift lever.
- The vehicle automatically applies the P (Park) position when the power switch is placed in the OFF position.

For additional information, refer to "Driving the vehicle" in the "Starting and driving" section of this manual.

LED HEADLIGHT (LOW BEAM) (IF SO EQUIPPED)

This vehicle uses an LED headlight for the headlight low beam. The LED headlight has the following features:

- Low power consumption
- The shape is very compact.

It is recommended that you visit a NISSAN certified LEAF dealer to replace the headlight.

DRIVING RANGE (IF SO EQUIPPED)

On the navigation system screen, you can check the estimated distance the vehicle may be driven with the available Li-ion battery charge. For additional information, refer to the LEAF Navigation System Owner's Manual.

NOTES

Charging

Precautions on charging CH-2
Types of charge and how to charge the Li-ion battery CH-5
How to normal charge (AC 220–240 volt) by charging device CH-8
How to trickle charge (AC 110–120 volt) by L1 EVSE CH-9
How to trickle charge (AC 110–120 volt) by L1 & L2 EVSE CH-15
How to normal charge (AC 220–240 volt) by L1 & L2 EVSE CH-22
How to quick charge (if so equipped) CH-29
Charge connector lock system CH-32
Charging methods CH-35
Charging timer CH-35
Timer Display CH-38
Immediate charge CH-40
Charging related remote function (models with Navigation System) CH-41
Charging related indicator lights CH-42
Charging status indicator lights CH-42
EVSE (Electric Vehicle Supply Equipment) control box indicator light CH-45
Charging troubleshooting guide CH-47

PRECAUTIONS ON CHARGING

WARNING

- **If you use any medical electric devices, such as an implantable cardiac pacemaker or an implantable cardiovascular defibrillator, check with the electric medical device manufacturer concerning the effects that charging may have on implanted devices before starting the charge operation. Charging may affect the operation.**
- **Make sure there is no water or foreign materials in the charge port, charge connector or electrical plug, and that they are not damaged or affected by rust or corrosion. If any of these conditions are noticeable, do not charge the Li-ion battery. This may result in a short circuit or electric shock and could cause a fire which may result in serious personal injury or death.**
- **To avoid serious personal injury or death when the Li-ion battery is charging, be aware of the following precautions.**
  - **Do not touch the metal contacts of the charge port, charge connector, electrical plug or Genuine NISSAN Adapter.**
  - **Do not touch the vehicle and EVSE when there is lightning.**
  - **Do not pull, twist, bend, step on, or drag the cable.**
- **Make sure the charge connector is removed from the charge port before starting your vehicle. If the charge connector is only partially engaged and the connector latch is unlocked, it is possible to place the EV in the Ready to Drive position.**
- **Do not touch the plug or the Genuine NISSAN Adapter if they are wet or with wet hands. Do not put the plug or the Genuine NISSAN Adapter in water, liquid or snow. This may cause an electric shock which may result in serious personal injury or death.**
- **Do not disassemble or modify the charge port, the EVSE or the Genuine NISSAN Adapter. This may cause a fire or an electric shock which may result in serious personal injury or death.**
- **If you notice an unusual odor, smoke or abnormal noises coming from the vehicle, stop charging immediately.**
- **Be careful not to allow your hands, hair, jewelry or clothing to come into contact with, or get caught in, the traction motor cooling fan. The cooling fan can start at any time during charging.**
- **Do not use extension cords or adapters unless they are Genuine NISSAN parts.**
- **Do not use the Genuine NISSAN Adapter with any devices except the Genuine NISSAN EVSE.**
- **Do not allow an unattended child to handle or use this product.**
- **Use the EVSE with outlet and wiring installed according to the regulations/standards.**
- **Pass the lower side belt of the EVSE case securely through the fastener on the bottom of the luggage board. If the case suddenly becomes loose, it may cause serious injury or death.**

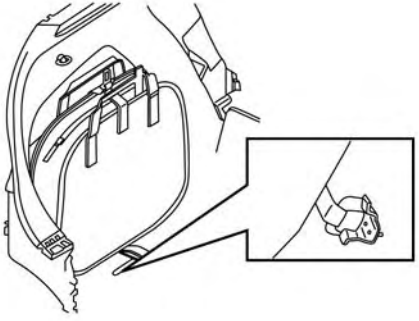

CAUTION

- **To prevent damage to the charging equipment:**
  - **Do not close the charge port lid without closing the charge port cap.**
  - **Do not subject the charging equipment to impact.**
  - **Do not store and use charging equipment in locations where the temperature is over 185°F (85°C).**
- **Make sure the charge port cap is closed on the charge port when charging is finished. If the charge port lid is closed when the charge port cap is open, water or foreign materials may enter the charge port.**
- **Do not charge when a vehicle body cover is in use. This may cause damage to the charge connector.**
- **Do not attempt to perform a jump start on the 12-volt battery at the same time that the Li-ion battery is being charged. Doing so may damage the vehicle or charging equipment and could cause an injury. For additional information, refer to "Jump starting" in the "In case of emergency" section of this manual.**
- **In normal charging (AC 220 - 240 volt) and trickle charging (AC 110 - 120 volt) using the EVSE (Electric Vehicle Supply Equipment) provided with the vehicle, NISSAN recommends using an AC 220 - 240 volt, 50A and an AC 110- 120 volt, 15A dedicated electrical circuit and outlet. The dedicated circuit is used to help prevent circuit damage or the circuit breaker from tripping due to the high draw of charging the Li-ion battery. If the dedicated circuit is not used, the circuit may cause adverse interference on MCB (Moulded Circuit Board) and household electrical appliances such as televisions and audio systems. If the circuit is shared, and another electrical device is being used at the same time the vehicle is charging, the breaker may trip. A qualified electrician should install a dedicated circuit if one is not already available.**

NOTE:

- **When charging the Li-ion battery, place the power switch in the OFF position. When the power switch is in the ON position, the Li-ion battery will not start charging.**
- **For your safety, if the charge connector r is connected to the vehicle while the power switch is in the Ready to Drive, the vehicle will automatically switch to the ON position. Because charging will not be started while the power switch is in this position, be sure to place the power switch in the OFF position.**
- **When the ambient temperature is 32°F (0°C) or less, charging time may be longer than normal and the level to which**

the Li-ion battery can be charged may be less than at higher temperatures.

- Do not operate the charging timer repeatedly while the charge connector is connected to the vehicle after the Li-ion battery charging is completed. Doing so may discharge the 12-volt battery. For additional information, refer to "Charging timer" in this section. If the Li-ion battery becomes discharged, charge it immediately.
- The power switch can be set to the ON position and the climate control and navigation system (if so equipped) can be used while the Li-ion battery is charging. However, because these operations consume Li-ion battery power, it will take longer for the Li-ion battery to become fully charged. Place the power switch in the OFF position to help reduce Li-ion battery charge time.
- If electrical power is interrupted while charging, charging restarts automatically when the electrical power is restored.
- It is recommended to keep the charge cable connected to save Li-ion battery power, when the heater and air conditioner are operating with remote operation (models with Navigation System).
- If the charge port is frozen, melt the ice using a hair dryer. After the ice has melted, charge the Li-ion battery. Forcing the charge connector to connect may cause a malfunction.
- If foreign materials have entered the charge connector and charge port and it is not possible to connect it, do not attempt to force the connection. It is recommended that you visit a NISSAN certified LEAF dealer. Forcing the charge connector to connect may cause damage to the charging equipment and vehicle.
- There is a hole on the charge port for water drainage. If the water drainage hole becomes blocked, or if water gets trapped inside the charge port, do not charge. It is recommended that you visit a NISSAN certified LEAF dealer.

TYPES OF CHARGE AND HOW TO CHARGE THE LI-ION BATTERY

	Charge port	Charge connector	Control box	Power	Charging
NORMAL CHARGE (AC 220-240 volt)	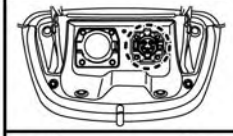	Normal charge connector			Use the charging device (AC 220-240 volt) that is installed in your home.
		Normal charge connector			Use the L1 & L2-EVSE. Use only a 220-240 volt, 50 amp, dedicated outlet installed by a qualified electrician.
TRICKLE CHARGE (AC 110-120 volt)	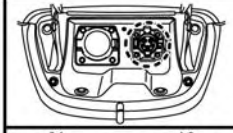	Normal charge connector			Use the L1 & L2-EVSE. Use only a 110-120 volt, 15 amp, dedicated outlet installed by a qualified electrician.
	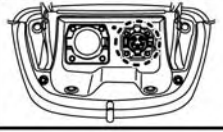	Normal charge connector	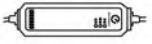		Use the L1-EVSE. Use only a 110-120 volt, 15 amp, dedicated outlet installed by a qualified electrician.
QUICK CHARGE (If so equipped) See "CH. How to quick charge" in the "CH. Charging" section.	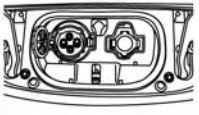	Quick charge connector			Public charging stations

This vehicle is an electric vehicle and it requires electricity to operate. The Li-ion battery is the only source of power to operate the vehicle. It is important to conserve power and plan your charging needs when you drive to avoid completely discharging the Li-ion battery and being unable to drive.

There are three methods available to charge the Li-ion battery:

- Normal charge
- Trickle charge
- Quick charge (if so equipped)

The time to completely charge the vehicle Li-ion battery varies based on the state of charge of the Li-ion battery, condition and age of the Li-ion battery, ambient temperature and condition of the power source connected to the vehicle, and whether the electric equipment (such as the air conditioner, which consumes electric power) is used.

Normal charge

NISSAN recommends using normal charging for usual charging of the vehicle. Use of quick charge should be minimized in order to help prolong Li-ion battery life.

Normal charging uses L1 & L2 EVSE(Electric Vehicle Supply Equipment) or SAE J1772 compliant the charging device connected to dedicated AC 220 - 240 volt circuit. L1 & L2 EVSE is provided with the vehicle (if so equipped). The charging device is a home charging dock installed in your home by a qualified electrician. Contact your NISSAN certified LEAF dealer. For additional information, refer to "How to normal charge" in this section.

Trickle Charge

Trickle charging is not recommended for regular use because it takes more time than normal charging. Trickle charge can be used when it is necessary to perform an emergency charge at a destination such as a friend's house.

Trickle charge uses the EVSE (Electric Vehicle Supply Equipment) provided with the vehicle or an SAE J1772 compliant cord set to connect the vehicle to an AC 110–120 volt, 15A dedicated outlet. The outlet should be protected by a circuit breaker to avoid overloading the circuit or other electrical hazard.

For additional information, refer to "How to trickle charge" in this section.

Quick charge (if so equipped)

Quick charge capability is only available on vehicles manufactured with the quick charge option, which includes the quick charge port. If your vehicle does not have such a port, quick charging cannot be used.

A vehicle equipped with a quick charge port is compatible with most CHAdeMO (Japanese industry standard) connectors on charging stations. Charging stations using this standard are UL certified and safe to use in the US. While supported by NISSAN, this connector may not become the US SAE standard.

Quick charging is possible (even several times a day). If the battery temperature is near the red zone, in order to protect the battery, power of the quick charging will be limited.

Public charging:

This vehicle is compatible with any public charging station that is SAE J1772 compliant. If you attempt to charge from a non-compliant charging station, you may not receive a complete charge, or you may not be able to charge at all due to hardware and software differences. NISSAN is working with states, municipalities, utility companies and others to assist in the preparation of markets and infrastructure. However, NISSAN makes no representations that public charging stations will be available in locations where you wish to operate the vehicle, nor can NISSAN predict the period of time it may take for public charging infrastructure to be developed in your area. Depending on where you live or drive, there may not be sufficient public charging stations available to meet your particular needs for driving range and charging away from your home. Trip planning is therefore important, and you should plan trips with these facts in mind.

Quick charge uses public charging stations (up to 50 kW of power).

The time needed to charge the Li-ion battery from discharged (low battery charge indicator light illuminated) to 80% charged using the quick charger depends on many factors including the Li-ion battery temperature and the type of quick charger used.

It may take more time to charge the Li-ion battery using the quick charger if the vehicle is parked in a cold location for a long time.

It may take more time to charge the Li-ion battery using the quick charger if the temperature of the Li-ion battery is high or low. For additional information, refer to "Li-ion battery temperature gauge" in the "Instruments and controls" section of this manual.

For additional information, refer to "How to quick charge" in this section.

Power Limitation Mode

This mode protects the health and operation of the vehicle's Li-ion battery. This mode operates in certain extreme conditions (heat, cold, low state of charge). Power available to vehicle systems, including its traction motor, is limited resulting in limited performance, acceleration and top speed. Charging may be automatically terminated, especially with repeated quick charging in extreme hot weather.

Checking Li-ion battery charge

The three methods for checking the amount of charge are as follows:

- Check by using the Li-ion battery available charge gauge on the vehicle information display when the power switch is placed in the ON position. For additional information, refer to "Li-ion battery available charge gauge" and "Li-ion battery low charge warning" in the "Instruments and controls" section of this manual.
- Check by using an internet enabled smart phone or personal computer. For additional information, refer to the LEAF Navigation System Owner's Manual.
- Check by using the charging status indicator light. For additional information, refer to "Charging status indicator lights" in this section.

NOTE:

- **During the charge operation, charge continues when the power switch is placed in the ON position.**
- **The Li-ion battery cannot be charged if the quick charge connector and the normal charge connector are connected at the same time. If another charge connector is connected mid-charge, charging will stop.**
- **For safety reasons, it is not possible to switch to the Ready to Drive position while a charge connector is connected.**
- **During charging, it is possible that the radio may be inaudible due to noise by the electromagnetic wave.**

HOW TO NORMAL CHARGE (AC 220–240 VOLT) BY CHARGING DEVICE

WARNING

- **If you use any medical electric devices, such as an implantable cardiac pacemaker or an implantable cardiovascular defibrillator, check with the electric medical device manufacturer concerning the effects that charging may have on implanted devices before starting the charge operation. Charging may affect the operation.**
- **Be sure to follow the precautions for using the charging device that can be installed in your home. Failing to do so could result in serious injury or death.**

CAUTION

- **Do not use any charging equipment that is not compatible with the LEAF. Doing so could prevent the Li-ion battery from charging properly or could result in damage to the vehicle or Li-ion battery.**

- Normal charge uses the charging device (AC 220 - 240 volt, 16A or 32A) that can be installed in your home to charge the Li-ion battery.
- Immediate charge, charging timer and remote charge (models with Navigation System) can be performed in the normal charge mode. For additional information, refer to "Charging methods" in this section.
- The charging equipment communicates with the vehicle before Li-ion battery charging starts. If this communication does not occur because other equipment is used, the Li-ion battery will not charge.
- NISSAN recommends that you connect the charging device when getting out of the vehicle, even if it is not going to be used. By doing this, you can get the most out of the remote climate control (models with Navigation System) and Climate Ctrl. Timer functions the next time you use the vehicle.

To start normal charge:

1. Push the P (Park) position switch to place the vehicle in the P (Park) position and apply the parking brake.
2. When charging the Li-ion battery, place the power switch in the OFF position. When the power switch is in the ON position, the Li-ion battery will not start charging.
3. Open the charge port lid and charge port cap. For additional information, refer to "Charge port lid" and "Charge port cap" in the "Pre-driving checks and adjustments" section of this manual.

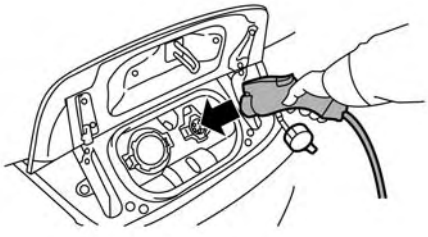

4. Connect the charge connector to the charge port. If it is connected normally, a beep will sound once.
5. If charging has started or if the battery is waiting for the charging timer, a beep will sound twice and the charging status indicator light display will change. For additional information, refer to "Charging status indicator lights" in this section.

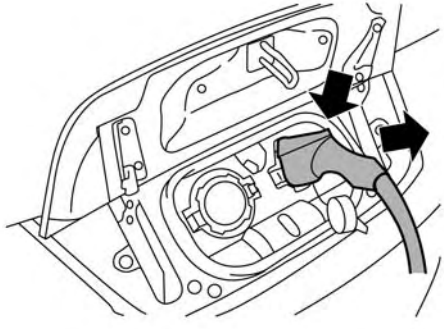

To stop normal charge:

1. Ensure that the charge connector lock is not engaged. For additional information, refer to "Charge connector lock system" in this section.
2. Press the button on the charge connector, release the lock and remove the charge connector from the charge port and properly store it.
3. Close the charge port cap.
4. After closing the charge port cap on the charge port, close the charge port lid.

NOTE:

To stop charging mid-charge, remove the charge connector. Charging automatically stops.

HOW TO TRICKLE CHARGE (AC 110–120 VOLT) BY L1 EVSE

WARNING

- **If you wear a pacemaker or an implantable cardiovascular defibrillator (ICD), stay at least 6 in (15 cm) away from the EVSE.**
- **If you wear a pacemaker or an implantable cardiovascular defibrillator (ICD), check with the electric medical device manufacturer concerning the effects that charging may have on implanted devices before starting the charge operation. Charging may affect the operation.**
- **In order to avoid an electric shock or fire due to a short circuit, connect to a GFI (Ground Fault Interrupter) circuit breaker and use a waterproof electrical ground socket.**

- **Discontinue charger use immediately if plug or outlet becomes hot to the touch or if you notice any unusual odors.**
- **Never use extension cords or plug adapters with charger.**
- **Always unplug the charger when not in use.**
- **The NISSAN Genuine L1 EVSE charging device draws 12 amps continuously while charging the Li-ion battery with AC 110–120 volt outlet. Do not plug in to any electrical circuit unless it is inspected by a qualified electrician to confirm that the electrical circuit can accept a 12 amp draw. Any electrical circuit has a much higher likelihood of being compromised in the following conditions listed below.**
  - **Improper use of the EVSE may result in a fire and serious injury or death.**
  - **Do not use the EVSE in structures more than 40 years old.**
  - **Do not use the EVSE in structures using fuse-based circuit protection. Use only with electrical circuits protected by circuit breakers.**
  - **Do not use the EVSE on electrical circuits with two-prong outlets.**
  - **Do not use the EVSE if other devices are plugged into the same circuit.**
  - **When unplugging, be sure to pull by the plug or the EVSE, not the cord.**
  - **Do not pull, twist, bend, step on or drag the cable.**
  - **Do not attach or detach the Genuine NISSAN Adapter while the Genuine NISSAN Adapter is inserted into an outlet.**
  - **Do not use the Genuine NISSAN Adapter if the plug is not fully inserted and not locked.**
  - **If you use the EVSE holder, handle it with care to avoid injuries due to contact with its edges or other parts.**
  - **Do not use the EVSE if the cable or cord is frayed, has broken insulation, or shows any other indications of damage.**
  - **Stop using the EVSE immediately if charging stops before completion when you move the plug or cord.**
  - **Do not use the EVSE if the control box, plug, the EVSE or charge connector is broken, cracked, open, corroded or shows any other indications of damage.**
  - **Do not use the EVSE if the plug has a loose connection with the outlet or if the outlet is damaged or rusted.**
  - **Before you connect the EVSE, be sure to check the rated current shown on the EVSE to ensure that the outlet and circuit have enough current capacity to charge your vehicle safely. If the capacity of the outlet and circuit is not enough, wiring may cause overheating or a fire.**
  - **If in any doubt about the outlet and circuit, consult a qualified electrician.**
  - **The EVSE has parts that may spark inside. Do not use it where gasoline, paint, or flammable liquids are used or stored.**
  - **Do not use if a malfunction occurs or if the EVSE has been damaged in any manner. It is recommended that you visit a NISSAN certified LEAF dealer for replacement.**

- **The EVSE contains no user serviceable parts. Do not attempt to repair the EVSE, doing so will void your warranty.**

- **Pass the lower side belt of the EVSE case securely through the fastener on the bottom of the luggage board. If the case suddenly becomes loose, it may cause serious injury or death.**

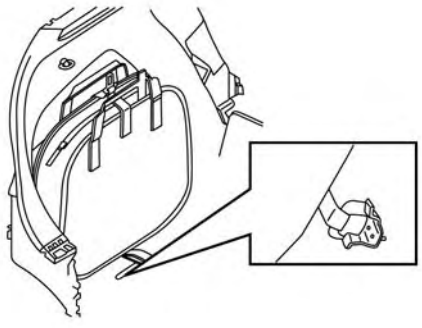

CAUTION

- **Only charge using a standard AC 110 - 120 volt, 15A dedicated electrical outlet (for example, do not use an electric generator). Failure to do so may cause charging to fail and could cause damage to the vehicle or the EVSE equipment due to power surges.**

- **NISSAN recommends using Genuine NISSAN charging equipment to charge the vehicle. Using non-NISSAN equipment could cause the Li-ion battery to not charge correctly and may damage the vehicle.**

Precautions on storage

- Do not store the EVSE and Genuine NISSAN Adapter in a place exposed to direct sunlight.
- Do not store the EVSE and Genuine NISSAN Adapter in a place exposed to wind or rain.
- Be sure to store the EVSE with the protective cap on to keep the terminal of the charge connector away from dirt and dust.
- Do not store the EVSE with the cable and/or cord wound around the control box.
- Do not store the EVSE in a condition in which the cable and/or cord are twisted.
- The control box will become hot while the EVSE is charging. This is not a malfunction.

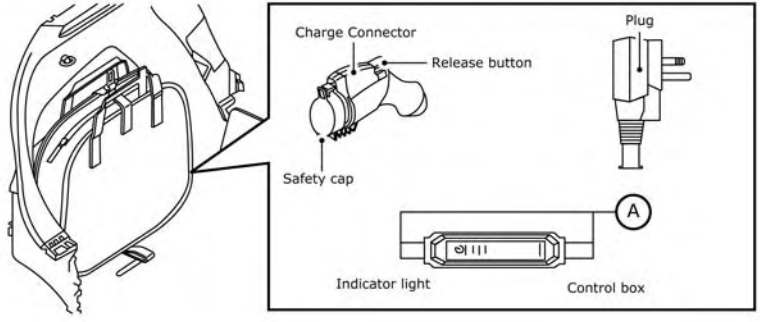

To start trickle charging:

NOTE:
Charging timer, remote charge (models with navigation system) and immediate charge can be performed in the trickle charge mode. For additional information, refer to "Charging methods" in this section.

1. Push the P (Park) position switch to place the vehicle in the P (Park) position and apply the parking brake.
2. When charging the Li-ion battery, place the power switch in the OFF position. When the power switch is in the ON position, the Li-ion battery will not start charging.
3. Open the charge port lid. For additional information, refer to "Charge port lid" in the "Pre-driving checks and adjustments" section of this manual.
4. Take out the EVSE from the rear hatch.
5. Connect the electrical plug to the AC 110 - 120 volt, 15A dedicated electrical outlet. If it is connected normally, the green light on the EVSE control box indicator light illuminates.

   NOTE:
   You can pass a rope through the holes Ⓐ in the control box in order to hang it up while the Li-ion battery is charging. Use the EVSE with the plug in an upright position (the cord should extend down from the outlet).
6. Open the charge port cap. For additional information, refer to "Charge port cap" in the "Pre-driving checks and adjustments" section of this manual.

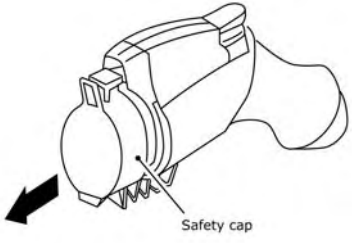

7. Remove the safety cap from the charge connector.
8. Connect the charge connector to the charge port. If it is connected normally, a beep will sound once.
9. If charging has started, or if the Li-ion battery is waiting for the charging timer, a beep will sound twice and the charging status indicator light display will change. For additional information, refer to "Charging status indicator lights" in this section.

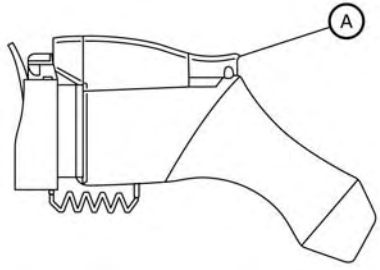

10. When recharging outside, such as in your driveway, use a commercially available padlock attached in position Ⓐ to prevent theft.

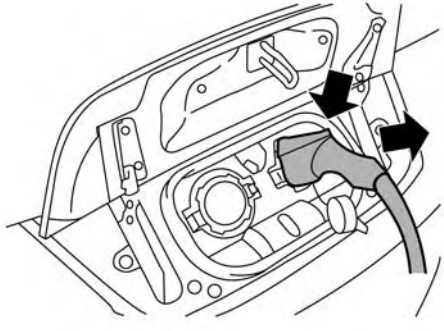

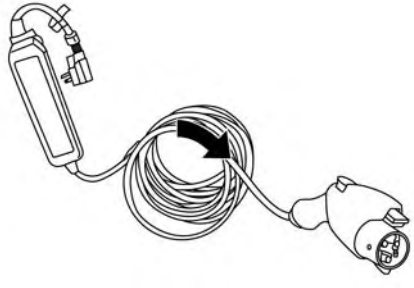

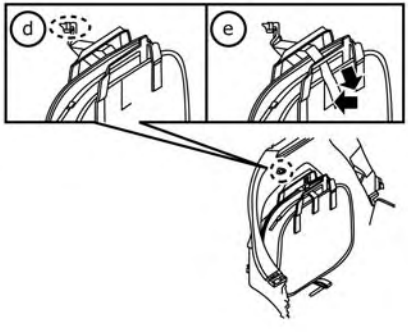

To stop trickle charge:

1. Ensure that the charge connector lock is not engaged. For additional information, refer to "Charge connector lock system" in this section.
2. Press the button on the charge connector, release the lock and remove the charge connector from the charge port.
3. Close the charge port cap.
4. Attach the safety cap to the EVSE.
5. Remove the electrical plug from the AC 110 - 120 volt, 15A dedicated electrical outlet.
6. Store in its case.

NOTE:
Perform the following procedure to store the EVSE in the case:

a. Wind the charge cable into a size that will allow it to be stored in the case (approximately 14 in (36 cm) in diameter).
b. Place the EVSE into the case.

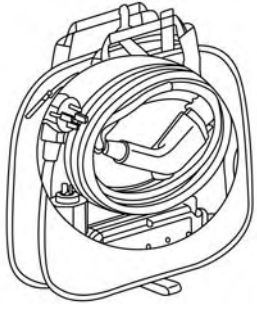

c. Pass the lower side belt from the case through the fastener on the bottom of the luggage board.
d. Hang the hook from the case to the ring from the trim.
e. Fix the belt with the hook-and-loop fastener on the side of the case by pulling the end of the belt.

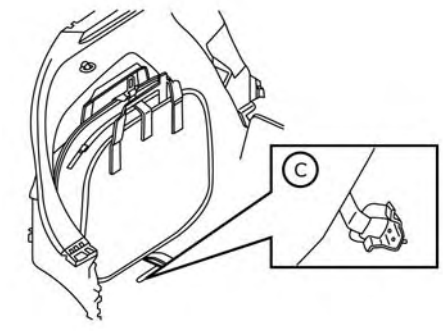

WARNING

Pass the lower side belt of the EVSE case securely through the fastener on the bottom of the luggage board. If the case suddenly becomes loose, it may cause serious injury or death.

7. After closing the cap on the charge port, close the charge port lid.

NOTE:
To stop charging mid-charge, remove the charge connector. Charging automatically stops.

HOW TO TRICKLE CHARGE (AC 110–120 VOLT) BY L1 & L2 EVSE

WARNING

- **If you wear a pacemaker or an implantable cardiovascular defibrillator (ICD), stay at least 6 in (15 cm) away from the EVSE.**
- **If you use any medical electric devices, such as an implantable cardiac pacemaker or an Implantable Cardiovascular Defibrillator (ICD), check with the electric medical device manufacturer concerning the effects that charging may have on implanted devices before starting the charge operation. Charging may affect the operation.**
- **In order to avoid an electric shock or fire due to a short circuit, connect to a GFI (Ground Fault Interrupter) circuit breaker and use a waterproof electrical ground socket.**
- **Discontinue charger use immediately if plug or outlet becomes hot to the touch or if you notice any unusual odors.**

- **Never use extension cords or plug adapters with charger.**
- **Always unplug the charger when not in use.**
- **The NISSAN Genuine L1 & L2 EVSE draws 12 amps continuously while charging the Li-ion battery with AC 110–120 volt outlet. Do not plug in to any electrical circuit unless it is inspected by a qualified electrician to confirm that the electrical circuit can accept a 12 amp draw. Any electrical circuit has a much higher likelihood of being compromised in the following conditions listed below.**
  - **Improper use of the EVSE may result in a fire and serious injury or death.**
  - **Do not use the EVSE in structures more than 40 years old.**
  - **Do not use the EVSE in structures using fuse-based circuit protection. Use only with electrical circuits protected by circuit breakers.**
  - **Do not use the EVSE on electrical circuits with two-prong outlets.**
  - **Do not use the EVSE if other devices are plugged into the same circuit.**
  - **When unplugging, be sure to pull by the plug or the Genuine NISSAN Adapter, not the cord.**
  - **Do not pull, twist, bend, step on or drag the cable.**
  - **Do not attach or detach the Genuine NISSAN Adapter while the Genuine NISSAN Adapter is inserted into an outlet.**
  - **Do not use the Genuine NISSAN Adapter if the plug is not fully inserted and not locked.**
  - **If you use the EVSE holder, handle it with care to avoid injuries due to contact with its edges or other parts.**
  - **Do not use the EVSE or Genuine NISSAN Adapter if the cable or cord is frayed, has broken insulation, or shows any other indications of damage.**
  - **Stop using the EVSE or Genuine NISSAN Adapter immediately if charging stops before completion when you move the Genuine NISSAN Adapter, the plug or the cord.**
  - **Do not use the EVSE or Genuine NISSAN Adapter if the control box, plug, Genuine NISSAN Adapter or charge connector is broken, cracked, open, corroded or shows any other indications of damage.**
  - **Do not use the EVSE or Genuine NISSAN Adapter if the plug or Genuine NISSAN Adapter has a loose connection with the outlet or if the outlet is damaged or rusted.**
  - **Before connecting the EVSE, be sure to check the rated current shown on the EVSE to ensure that the outlet and circuit have enough current capacity to charge your vehicle safely. If the capacity of the outlet and circuit is not enough, wiring may cause overheating or a fire.**
  - **If in any doubt about the outlet and circuit, consult a qualified electrician.**
  - **The device has parts that may spark inside. Do not use it where gasoline, paint, or flammable liquids are used or stored.**

- **Do not use if a malfunction occurs or if the EVSE or Genuine NISSAN Adapter has been damaged in any manner. It is recommended that you visit a NISSAN certified LEAF dealer for replacement.**
- **The EVSE or Genuine NISSAN Adapter contains no user serviceable parts. Do not attempt to repair the EVSE or Genuine NISSAN Adapter, doing so will void your warranty.**

▪ **Pass the lower side belt of the EVSE case securely through the fastener on the bottom of the luggage board. If the case suddenly becomes loose, it may cause serious injury or death.**

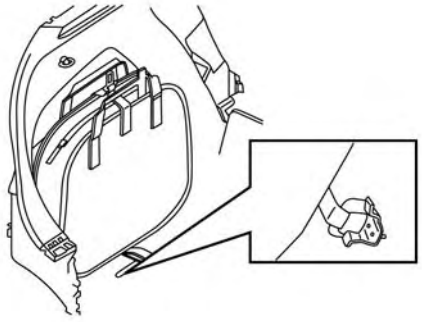

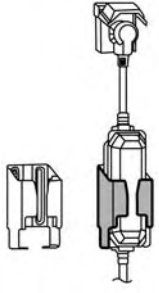

CAUTION

- **Only charge using a standard AC 110 – 120 volt, 15A dedicated electrical outlet (for example, do not use an electric generator). Failure to do so may cause charging to fail and could cause damage to the vehicle or the EVSE due to power surges.**
- **NISSAN recommends using Genuine NISSAN charging equipment to charge the vehicle. Using non-NISSAN equipment could cause the Li-ion battery to not charge correctly and may damage the vehicle.**

Precautions on storage

- Do not store the EVSE and Genuine NISSAN Adapter in a place exposed to direct sunlight.
- Do not store the EVSE and Genuine NISSAN Adapter in a place exposed to wind or rain.
- Be sure to store the EVSE with the protective cap on to keep the terminal of the charge connector away from dirt and dust.

- Do not store the EVSE with the cable and/or cord wound around the control box.
- Do not store the EVSE in a condition in which the cable and/or cord are twisted.
- The control box will become hot while the EVSE is charging. This is not a malfunction.

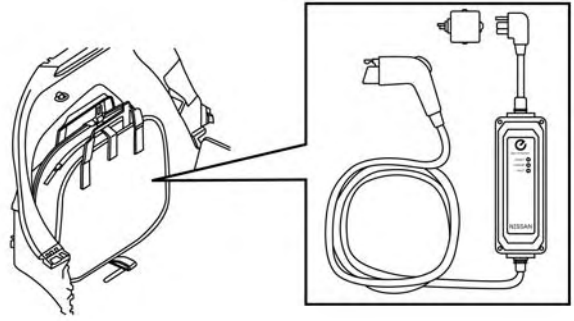

To start trickle charging:

NOTE:
Charging timer, remote charge (models with navigation system) and immediate charge can be performed in the trickle charge mode. For additional information, refer to "Charging methods" in this section.

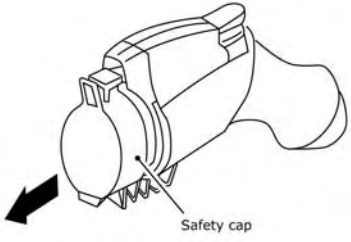

1. Push the P (Park) position switch to place the vehicle in the P (Park) position and apply the parking brake.
2. When charging the Li-ion battery, place the power switch in the OFF position. When the power switch is in the ON position, the Li-ion battery will not start charging.
3. Open the charge port lid. For additional information, refer to “Charge port lid” in the “Pre-driving checks and adjustments” section of this manual.
4. Take out the EVSE from the rear hatch.
5. Connect the electrical plug to the AC 110 - 120 volt, 15A dedicated electrical outlet using a NISSAN Genuine Adapter. . If it is connected normally, the green light on the EVSE control box indicator light illuminates.

NOTE:
You can pass a rope through the holes Ⓐ on the control box to the holder in order to hang it up while the Li-ion battery is charging.

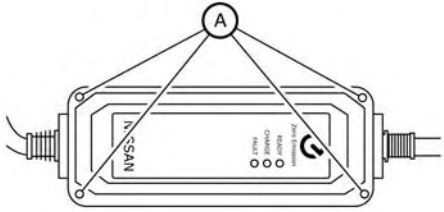

Use the EVSE with the plug in the upright position. (The cord should extend down from the outlet.)

6. Open the charge port cap. For additional information, refer to “Charge port cap” in the “Pre-driving checks and adjustments” section of this manual.

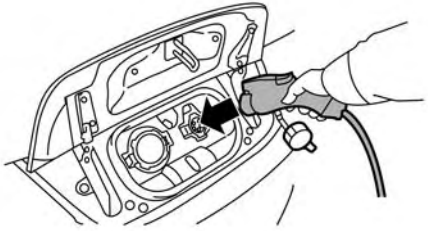

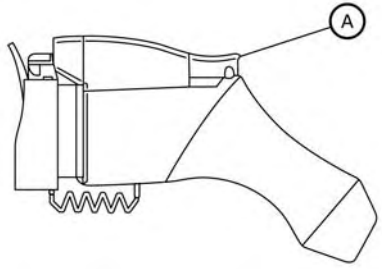

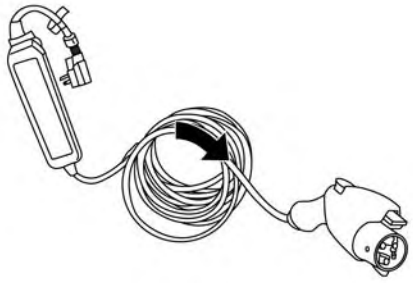

7. Remove the safety cap from the charge connector.
8. Connect the charge connector to the charge port. If it is connected normally, a beep will sound once.
9. If charging has started, or if the Li-ion battery is waiting for the charging timer, a beep will sound twice and the charging status indicator light display will change. For additional information, refer to "Charging status indicator lights" in this section.
10. When recharging outside, such as in your driveway, use a commercially available padlock attached in position Ⓐ to prevent theft.

To stop trickle charge:

1. Ensure that the charge connector lock is not engaged. For additional information, refer to "Charge connector lock system" in this section.
2. Press the button on the charge connector, release the lock and remove the charge connector from the charge port.
3. Attach the safety cap to the EVSE.
4. Remove the electrical plug from the AC 110 - 120 volt, 15A dedicated electrical outlet.

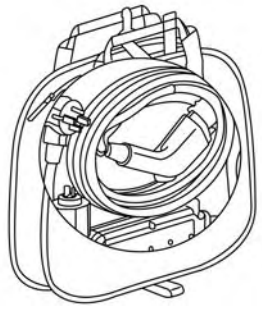

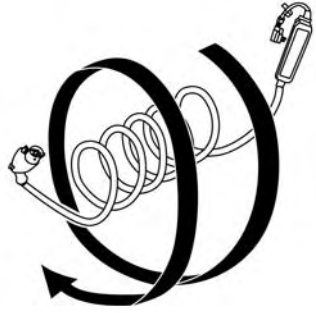

WARNING

Pass the lower side belt of the EVSE case securely through the fastener on the bottom of the luggage board. If the case suddenly becomes loose, it may cause serious injury or death.

5. Store in its case.

NOTE:
Perform the following procedure to store the EVSE in the case.

a. Wind the charge cable into a size that will allow it to be stored in the case (approximately 14 in (36 cm) in diameter). Winding the charge cable in the direction shown below avoids shortening of cable life.

b. Place the EVSE into the case.

c. Pass the lower side belt from the case through the fastener on the bottom of the luggage board.

d. Hang the hook from the case to the ring from the trim.

e. Fix the belt with the hook-and-loop fastener on the case, pulling the belt from the case.

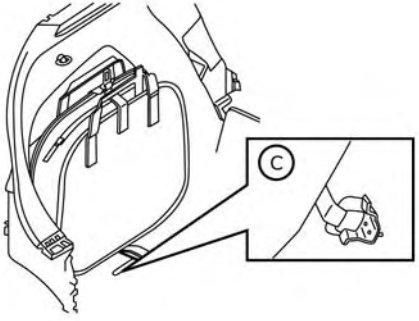

6. After closing the cap on the charge port, close the charge port lid.

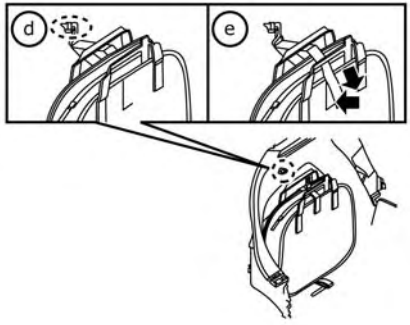

NOTE:
To stop charging mid-charge, remove the charge connector. Charging automatically stops.

HOW TO NORMAL CHARGE (AC 220–240 VOLT) BY L1 & L2 EVSE

WARNING

- **If you wear a pacemaker or an implantable cardiovascular defibrillator (ICD), stay at least 6 in (15 cm) away from the EVSE.**
- **If you wear a pacemaker or an implantable cardiovascular defibrilator (ICD), check with the electric medical device manufacturer concerning the effects that charging may have on implanted devices before starting the charge operation. Charging may affect the operation.**
- **In order to avoid an electric shock or fire due to a short circuit, connect to a GFI (Ground Fault Interrupter) circuit breaker and use a waterproof electrical ground socket.**
- **Discontinue charger use immediately if plug or outlet becomes hot to the touch or if you notice any unusual odors.**
- **Never use extension cords or plug adapters with charger.**

- **Always unplug the charger when not in use.**
- **The NISSAN Genuine L1 &L2 EVSE draws 30 amps continuously while charging the Li-ion battery with AC 220–240 volt outlet. Do not plug in to any electrical circuit unless it is inspected by a qualified electrician to confirm that the electrical circuit can accept a 30 amp draw. Any electrical circuit has a much higher likelihood of being compromised in the following conditions listed below.**
  - **Improper use of the EVSE may result in a fire and serious injury or death.**
  - **Do not use the EVSE in structures more than 40 years old.**
  - **Do not use the EVSE in structures using fuse-based circuit protection. Use only with electrical circuits protected by circuit breakers.**
  - **Do not use the EVSE on electrical circuits with two-prong outlets.**
  - **Do not use the EVSE if other devices are plugged into the same circuit.**
  - **When unplugging, be sure to pull by the plug and not the cord.**
  - **Do not pull, twist, bend, step on or drag the cable.**
  - **If you use the EVSE holder, handle it with care to avoid injuries due to contact with its edges or other parts.**
  - **Do not use the EVSE if the cable or cord is frayed, has broken insulation, or shows any other indications of damage.**
  - **Stop using the EVSE immediately if charging stops before completion when you move the plug or cord.**
  - **Do not use the EVSE if the control box, plug, the EVSE or charge connector is broken, cracked, open, corroded or shows any other indications of damage.**
  - **Do not use the EVSE if the plug has a loose connection with the outlet or if the outlet is damaged or rusted.**
  - **Before you connect the EVSE, be sure to check the rated current shown on the EVSE to ensure that the outlet and circuit have enough current capacity to charge your vehicle safely. If the capacity of the outlet and circuit is not enough, wiring may cause overheating or a fire.**
  - **If in any doubt about the outlet and circuit, consult a qualified electrician.**
  - **The EVSE has parts that may spark inside. Do not use it where gasoline, paint, or flammable liquids are used or stored.**
  - **Do not use if a malfunction occurs or if the EVSE has been damaged in any manner. It is recommended that you visit a NISSAN certified LEAF dealer for replacement.**
  - **The EVSE contains no user serviceable parts. Do not attempt to repair the EVSE, doing so will void your warranty.**
- **Pass the lower side belt of the EVSE case securely through the fastener on the bottom of the luggage board. If the case suddenly becomes loose, it may cause serious injury or death.**

CAUTION

- **Only charge using a standard AC 220 - 240 volt, 50A dedicated electrical outlet (for example, do not use an electric generator). Failure to do so may cause charging to fail and could cause damage to the vehicle or the EVSE due to power surges.**
- **NISSAN recommends using Genuine NISSAN charging equipment to charge the vehicle. Using non-NISSAN equipment could cause the Li-ion battery to not charge correctly and may damage the vehicle or the EVSE.**

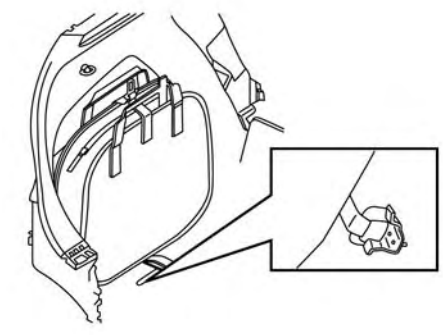

Precautions on storage

- Do not store the EVSE in a place exposed to direct sunlight.
- Do not store the EVSE in a place exposed to wind or rain.
- Be sure to store the EVSE with the protective cap on to keep the terminal of the charge connector away from dirt and dust.
- Do not store the EVSE with the cable and/or cord wound around the control box.
- Do not store the EVSE in a condition in which the cable and/or cord are twisted.
- The control box will become hot while the EVSE is charging. This is not a malfunction.
- Normal charge (AC 220-240 volt) by L1 & L2 EVSE is performed using an AC 220 - 240 volt, 50A dedicated electrical outlet using the L1 & L2 EVSE provided with the vehicle.

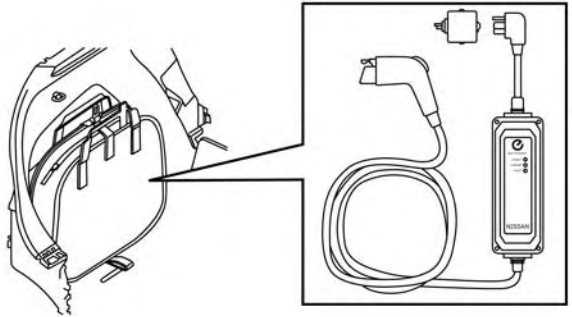

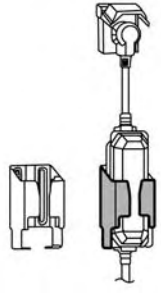

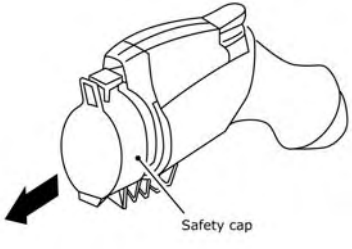

To start normal charging:

NOTE:
Charging timer, remote charge (models with navigation system) and immediate charge can be performed in the trickle charge mode. For additional information, refer to "Charging methods" in this section.

1. Push the P (Park) position switch to place the vehicle in the P (Park) position and apply the parking brake.
2. When charging the Li-ion battery, place the power switch in the OFF position. When the power switch is in the ON position, the Li-ion battery will not start charging.
3. Open the charge port lid. For additional information, refer to "Charge port lid" in the "Pre-driving checks and adjustments" section of this manual.
4. Take out the EVSE from the rear hatch.

5. Connect the electrical plug to the AC 220 - 240 volt, 50A dedicated electrical outlet. If it is connected normally, the green light on the EVSE control box indicator light illuminates.

NOTE:
You can pass a rope through the holes Ⓐ on the control box or place the control box to the holder in order to hang it up while the Li-ion battery is charging.

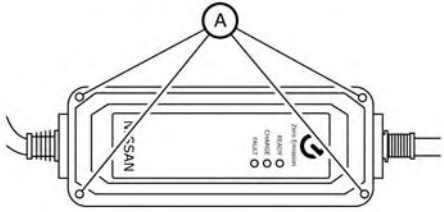

Use the EVSE with the plug in an upright position. (The cord should extend down from the outlet.)

6. Open the charge port cap. For additional information, refer to "Charge port cap" in the "Pre-driving checks and adjustments" section of this manual.

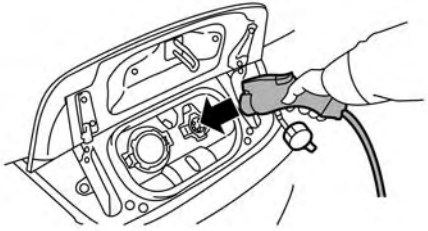

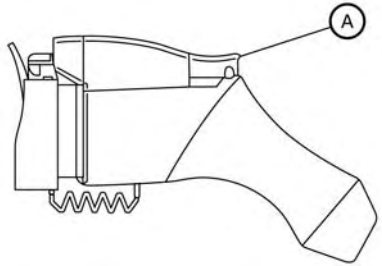

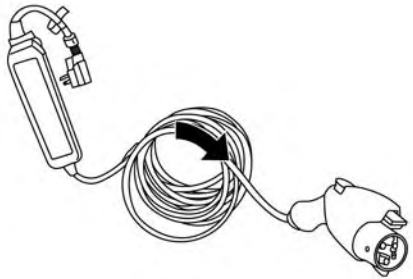

7. Remove the safety cap from the charge connector.
8. Connect the charge connector to the charge port. If it is connected normally, a beep will sound once.
9. If charging has started, or if the Li-ion battery is waiting for the charging timer, a beep will sound twice and the charging status indicator light display will change. For additional information, refer to "Charging status indicator lights" in this section.
10. When recharging outside, such as in your driveway, use a commercially available padlock attached in position Ⓐ to prevent theft.

To stop normal charging:

1. Ensure that the charge connector lock is not engaged. For additional information, refer to "Charge connector lock system" in this section.
2. Press the button on the charge connector, release the lock and remove the charge connector from the charge port.
3. Attach the safety cap to the EVSE.
4. Remove the electrical plug from the AC 220 - 240 volt, 50A dedicated electrical outlet.

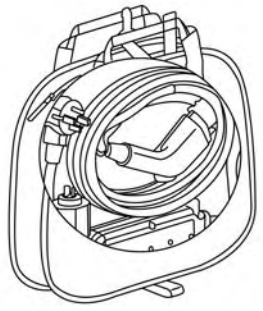

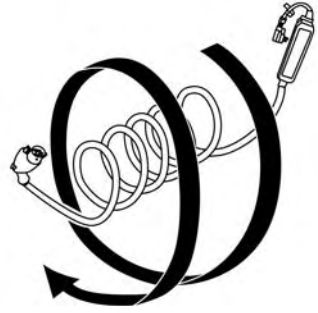

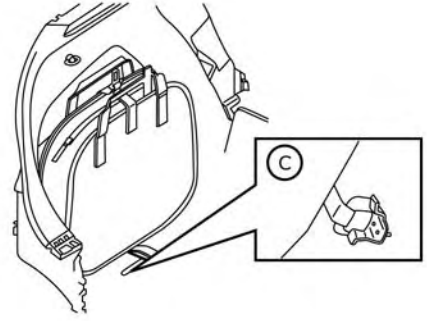

5. Store in its case.

NOTE:
Perform the following procedure to store the EVSE in the case:

a. **Wind the charge cable into a size that will allow it to be stored in the case (approximately 14 in (36 cm) in diameter). Winding the charge cable in the direction shown below avoids shortening the cable life.**

b. **Place the EVSE into the case.**

c. **Pass the ring of the lower side belt from the case through the fastener on the bottom of the luggage board.**

d. **Hang the hook from the case to the ring from the trim.**

e. **Fix the belt with the hook-and-loop fastener on the case, pulling the belt from the case.**

WARNING

Pass the lower side belt of the EVSE case securely through the fastener on the bottom of the luggage board. If the case suddenly becomes loose, it may cause serious injury or death.

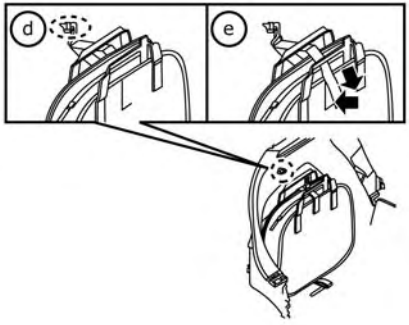

6. After closing the cap on the charge port, close the charge port lid.

NOTE:

To stop charging mid-charge, remove the charge connector. Charging automatically stops.

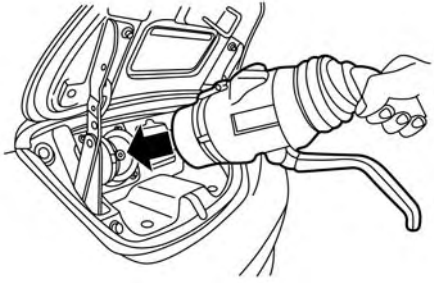

HOW TO QUICK CHARGE (IF SO EQUIPPED)

Quick charge uses public charging stations (up to 50 kW of power) to charge the battery in a short period of time.

WARNING

- **Always use a quick charger that is compatible with the LEAF. Using an incompatible quick charger may cause a fire or malfunction resulting in serious personal injury or death.**
- **Before starting the quick charge, carefully read the instructions provided on the quick charger and make sure the quick charge connector is properly connected and locked. Failure to connect or operate the quick charger correctly could cause damage to the vehicle or the charging equipment.**

NOTE:

- **Quick charging is possible (even several times a day) if the battery temperature is not near the red zone. If the battery temperature reaches the red zone, in order to protect the battery, quick charging is not allowed and the power limitation mode will be triggered. For additional information, refer to "Li-ion battery temperature gauge" in the "EV Overview" and "Instruments and controls" section of this manual.**
- **When the Li-ion battery available charge and the Li-ion battery capacity are shown on the quick charger unit, the readings may differ from the Li-ion battery available charge/capacity reading shown on the vehicle's display.**

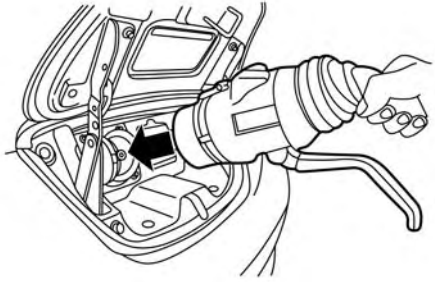

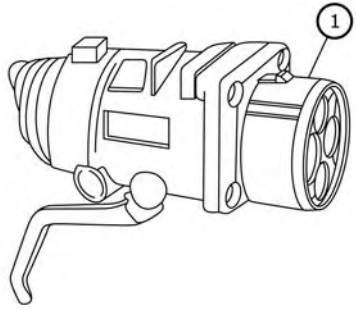

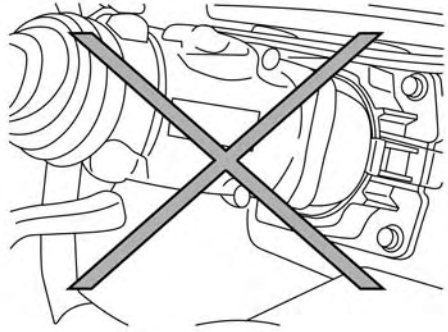

To start charging:

1. Push the P (Park) position switch to place the vehicle in the P (Park) position and apply the parking brake.
2. When charging the Li-ion battery, place the power switch in the OFF position. When the power switch is in the ON position, the Li-ion battery will not start charging.
3. Open the charge port lid and charge port cap. For additional information, refer to "Charge port lid" and "Charge port cap" in the "Pre-driving checks and adjustments" section of this manual.
4. Align ① with the groove of the charge port and insert the charge connector.

CAUTION

- **Be sure to insert the charge connector straight into the quick charge port right up to the base. Failure to do so may result in the Li-ion battery not charging or could cause damage to the charging equipment.**

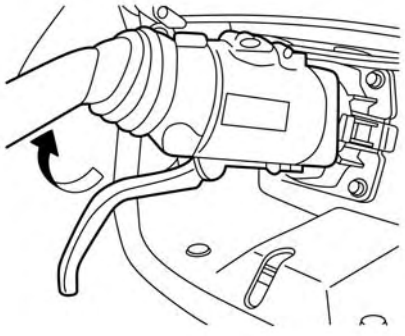

5. Grasp the lock lever and lock the charge connector.
6. Follow the instructions on the quick charge equipment to start charging. When the equipment is properly installed and ready to charge a beep sounds twice and the charging status indicator light will change. For additional information, refer to "Charge status indicator lights" in this section.

Charging ends in the following situations:

- When charging is complete
- When the possible charge time set for the quick charger is exceeded

NOTE:

- **Charging may automatically stop even if it is not completed.**
- **If charging stops mid-charge, you can restart charging by pressing the start button on the quick charger again.**
- **The charge connector is locked to the charge port during charging and cannot be disconnected. Follow the instructions on the quick charge equipment to stop charging. Confirm charging is stopped by looking at the indicators on the instrument panel. The charge connector can be disconnected from the vehicle when charging is stopped.**
- **When quick charging, the Li-ion battery charging rate is slower as the percentage of available battery charge increases.**

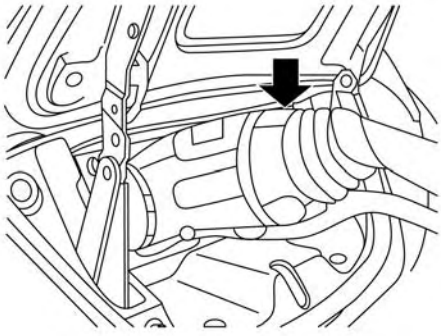

To finish charging:

1. Confirm charging is stopped by looking at the indicators on the instrument panel. The charge connector can be disconnected from the vehicle when charging is stopped.
2. Unlock the charge connector, remove from the vehicle and properly store it.
3. Close the quick charge port cap.
4. Shut the charge port lid.

CAUTION

- **As the quick charge connector is heavier in comparison to the other charge connectors, allowing it to drop could cause damage to the vehicle or charge connector or personal injury. When removing the connector, be sure to pull it out straight and as carefully as possible.**

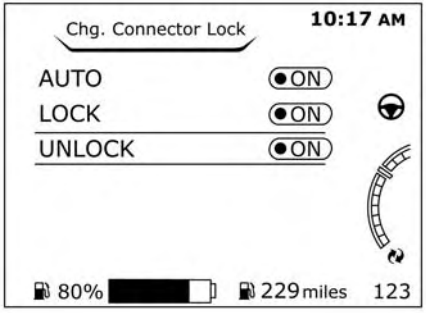

CHARGE CONNECTOR LOCK SYSTEM

The normal or trickle charge connector can be locked to the normal charge port.

Perform the following steps and the charge connector lock mode can be selected:

1. Push the ▲ ▼ button to select "EV settings" and then push the OK button.
2. Push the ▲ ▼ button until "Chg. Connector Lock" is selected and then push the OK button.
3. Push the ▲ ▼ button until the preferred mode of AUTO, LOCK or UNLOCK, is selected and then push the OK button.

NOTE:
The charge connector lock can be activated when the shift lever is in the P (Park) position and the charge connector is connected. The charge connector lock will not be activated if the charge connector is not properly connected.

AUTO mode

To select AUTO mode, push the up and down switch until "AUTO" is selected and then push the OK button. The indicator light for "AUTO" will illuminate.

When AUTO mode is selected, the charge connector is locked while charging is in process. The charge connector will be unlocked automatically when charging is complete.

LOCK mode

To select the LOCK mode, push the up and down switch until "LOCK" is selected and then push the OK button. The indicator light for "LOCK" will illuminate.

When LOCK mode is selected, the charge connector will remain locked. The charge connector will be unlocked when UNLOCK mode is selected or temporary unlock operation is performed.

UNLOCK mode

To select UNLOCK mode, push the up and down switch until "UNLOCK" is selected and then push the OK button. The indicator light for "UNLOCK" will illuminate.

When UNLOCK mode is selected, the charge connector will remain unlocked.

Temporary unlock mode:

When the charge connector lock system is in the AUTO or LOCK mode, the charge connector lock can be unlocked temporarily by using the NISSAN Intelligent Key® or the charge port lid opener switch.

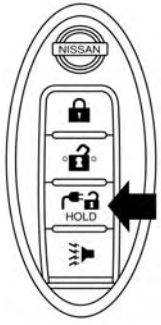

Unlock operation using Intelligent Key

1. Press the charge port lid opener button on the Intelligent Key for more than 1 second.
2. The charging status indicator light flashes three times and a beep sounds three times. The charge connector lock is unlocked for 30 seconds.
3. After 30 seconds, the charge connector lock is locked.

The charge connector lock can also be unlocked for 30 seconds when unlocking a door or the rear hatch (in this case, the charging status indicator light does not operate). If the lock is operated again within 30 seconds after unlocking the door/rear hatch, the charge connector lock is locked again.

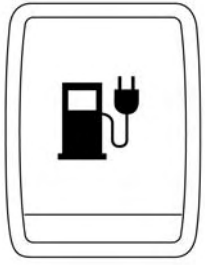

Unlock operation using charge port lid opener switch

1. Push the charge port lid opener switch.
2. The charging status indicator light flashes three times and a beep sounds three times. The charge connector lock is unlocked for 30 seconds.
3. After 30 seconds, the charge connector lock is locked.

NOTE:

- **Depending on the charging station, the lock mechanism established by local standards may not be compatible with your vehicle. It may not be possible for the charge connector to lock to your vehicle.**
- **When the power source is cut off while charging in AUTO mode, the connector will be continuously locked for 5 minutes, then it will be released.**
- **When timer charging is set with AUTO mode, the connector will not lock until charging is started.**
- **When the following system(s) are operated individually or the 12-volt battery is being charged, the charging connector lock will not lock:**
  - **Climate Ctrl. Timer**
  - **Remote climate control (if so equipped)**
  - **Li-ion battery warmer (if so equipped)**

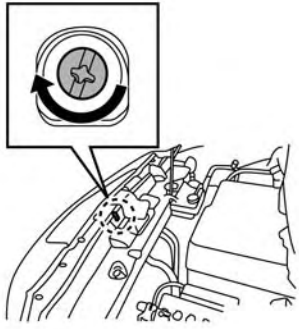

If the charge connector cannot be unlocked

1. Place power switch in the OFF position.
2. Open the hood.
3. Insert a flat head screwdriver or suitable tool into the screw that is located on the front of the hood lock.
4. Turn it clockwise to release the charge connector lock.
5. Remove the charge connector.

CHARGING METHODS

CHARGING TIMER

Use charging timer to schedule when the Li-ion battery charges. The vehicle automatically begins charging at the scheduled times when the charge connector is connected to the vehicle. The timers do not need to be reset each time the Li-ion battery needs charging.

The charging timer can save two timer settings that include the charging start time and end time. The charging timer can be applied to the timer settings for each day of the week (models with Navigation System).

The vehicle automatically begins charging at the scheduled times when the charge connector is connected to the vehicle. The timers do not need to be reset each time the Li-ion battery needs to be charged.

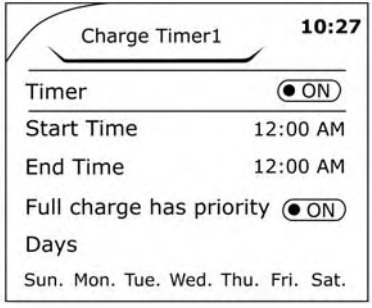

1. Push the ▲ ▼ button to select "EV settings" and then push the OK button.
2. Push the ▲ ▼ button to select "Charge Timer1" or "Charge Timer2" and then push the OK button.
3. Push the ▲ ▼ button to select "Timer" and then push the OK button. The indicator light will turn on when the timer setting is turned on.
4. Push the ▲ ▼ button until to select "Start time" and then push the OK button.
5. Push the ▲ ▼ button to set "Hour" and then push the OK button.
6. Push the ▲ ▼ button to set "Minute" and then push the OK button.
7. Push the ▲ ▼ button to select "End time" and then push the OK button.
8. Push the ▲ ▼ button to set "Hour" and then push the OK button.
9. Push the ▲ ▼ button to set "Minute" and then push the OK button.
10. Models with Navigation System: Push the ▲ ▼ button to select the days of the week you wish to activate the Charging Timer and then push the OK button. Push the Back button to return to the previous display.
11. After the setting is complete, place the power switch in the OFF position, and then connect the charge connector to the vehicle.

NOTE:

- **Always place the power switch in the OFF position after setting the charging timers. When the power switch in the ON position, the Li-ion battery will not start charging.**

- **Some charging stations used to perform normal charge are equipped with timer functions. If the charger timer function and the vehicle timer are both set, and the two timers are not set to operate at the same time, it is possible that the charger will not start or the battery will not be charged to the level expected.**
- **The Li-ion battery may not charge to the expected level using the Charging Timer while the Li-ion battery warmer (if so equipped) operates.**
- **Charging timer is performed according to the current time setting of the clock on the vehicle information display. When setting the charging timer function, be sure to check that the current time displayed is correct.**
- **To turn off the charging timer function, select "Timer" on the Charge Timer display (vehicle information display) using the ▲ ▼ button and push the OK button to turn off the indicator light. The start and end time settings are not deleted, even if the charging timer function is turned off.**
- **If the day of the week is not selected on the timer charge setting screen, the charging timer will not operate on that day. The system will wait until the next set charging time to perform charging (models with Navigation System).**
- **When either the charge start time or charge end time is set, the charging timer function is activated.**
- **When only the charging timer end time is set, the system automatically determines when to begin charging. The Li-ion battery may not be charged to the expected level in the following conditions:**
- The Li-ion battery is charged in cold weather.
- The charge connector is connected to the vehicle too close to the scheduled charging end time. When only the charging timer end time is set, the system automatically stops charging when the Li-ion battery charges to a full charge. Charging may stop before the scheduled end time.
- **If the charging timer and the Climate Ctrl. Timer are operating at the same time due to an overlap of the timer settings, you can prioritize which function receives electrical power first. For additional information, refer to the LEAF Navigation System Owner's Manual.**
- **When charging is set as the first priority, the Climate Ctrl. Timer does not start until 10 segments (80%) of the Li-ion battery available charge gauge are illuminated.**
- **Even when the climate control is set as the first priority, the climate control system will be turned off when the electric demands of the climate control system are more than can be provided to the Li-ion battery for charging.**
- **Set only the Charging Timer End time when charging in cold weather. The vehicle automatically determines when to start charging to fully charge the Li-ion battery, even if the Li-ion battery warmer (if so equipped) operates. Charging ends before the set End time if the Li-ion battery is fully charged.**

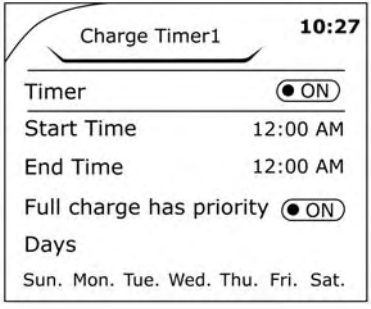

Timer Charge setting screen

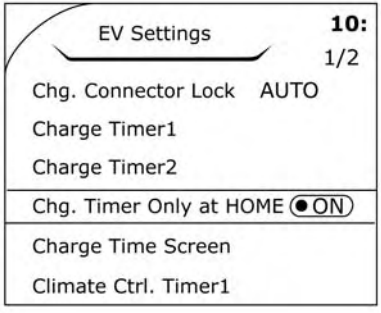

Chg. Timer Only at HOME (models with Navigation System):

If you register your home in the navigation system and turn on "Chg. Timer Only at HOME," the timer charging is applied only when the normal or trickle charge is performed at home. For additional information, refer to LEAF Navigation System Owner's Manual for the registration. When the charging is performed at a place other than home, the charging automatically starts when a normal or trickle charge connector is connected to the vehicle.

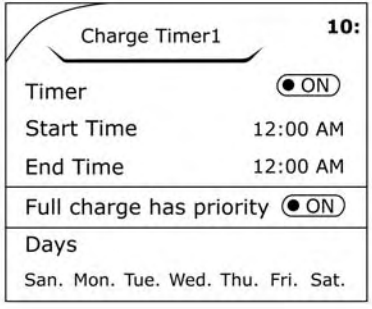

Full charge has priority:

If "Full charge has priority" is turned on, the charge start timer will be advanced if the fully charged condition of the Li-ion battery cannot be achieved during the start time to end time interval. If the fully charged battery condition cannot be achieved, the charge continues until the battery is fully charged.

NOTE:
If "Full charge has priority" is turned on, it is possible that the battery is not charged fully by the charge end time due to the operating condition of Climate Ctrl. Timer and the tolerance of charging time, etc. In that case, the charging continues until the Li-ion battery is fully charged.

TIMER DISPLAY

The timer display appears for approximately 30 seconds when the power switch is placed in the OFF position.

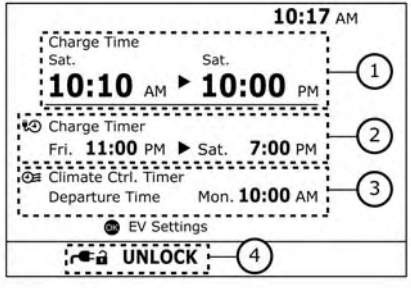

① Charging time

The estimated time of charging the Li-ion battery (start time and end time) is displayed.

- When the charging timer is set, the charging system calculates the estimated time to charge the Li-ion battery based on the electrical power supplied in the last charging using the timer, and the start time and end time are displayed.
- When the charging timer is set to OFF, the estimated end time to charge the Li-ion battery to a full level in the case of performing the immediate charge. The end time is calculated based on the electrical power selected in the "Charge Time Screen".
- When the Li-ion battery was fully charged, the charging time will be displayed as "--:--".

② Charging timer setting status

When the charging timer is set, the start time and end time of the charging using the timer are displayed

③ Climate Ctrl. timer setting status

When the Climate Ctrl. timer is set, the departure time (end time) set for the Climate Ctrl. Timer is displayed.

④ Charge connector lock setting status

The current mode of the charge connector lock (AUTO, LOCK or UNLOCK) is displayed. For the charge connector lock operation, see "Charge connector lock system" in the "Charging" section of this manual.

When the OK button on the steering wheel is pushed, the display will be switched to the "EV Settings" menu. In the EV Settings, the setting of the charging timer, Climate Ctrl. timer and charge connector lock

mode can be changed. (See "Vehicle information display" in the "2. Instruments and controls" section of this manual for the settings menu of the vehicle information display.)

When the ▲ ▼ button on the steering wheel is pushed while the timer display is shown, the display is switched to the ECO Drive Report (if the vehicle was driven).

Either display will continue to be displayed for another 30 seconds when the button is operated. If the doors are locked after the power switch was placed in the OFF position, the display will turn off before the preset time.

For models with Navigation System, the day of the week is displayed with the time (hour and minute) in each information ① – ③.

In addition to the above, note the following conditions for the charging time ① information:

- The charging time is displayed by the 10 minutes. If the estimated charging time is longer than 24 hours, "Over 24h" is displayed.
- When the charging is set to start immediately after connecting the charge connector to the vehicle, the start time is displayed as "Charge Now".
- While being charged, the time when the charging has actually started is displayed as the start time. The end time is displayed according to the estimated charging time that was calculated based on the electrical power being supplied.
- For models with Li-ion battery warmer, the charging system calculates the electrical power used by the battery warmer when the Li-ion battery temperature is low, and longer charging time will be displayed.
- When "Chg. Timer Only at HOME" is set to ON (models with Navigation System) in the EV Settings, the start time is displayed only when the power switch is placed in the OFF position at home. If the power switch is placed in the OFF position other than at home, the immediate charge mode is selected and "Charge Now" will appear as the start time.
- When "Full charge has priority" is set to ON in the EV Settings and the Li-ion battery cannot be charged to a full level within the hours between the scheduled start time and end time of the charging timer, the charging time shows the time that exceeds the scheduled hours in the charging timer.
- If you need to confirm the estimated charging time depending on the available electrical power (supplied to the charger), see the Estimated Charge Time display. (See "Trip computer" in the "Instruments and controls" section of this manual.)

NOTE:

- **The displayed end time of charging is an estimation. The Li-ion battery may not be charged to a full level by the estimated end time.**
- **If the charging timer and the Climate Ctrl. timer are set to operate at the same time, longer charging time will be displayed or the Li-ion battery may not be charged to a full level at the scheduled end time.**

IMMEDIATE CHARGE

When a charging timer is not turned on, charging automatically starts when a normal or trickle charge connector is connected to the vehicle.

Use the immediate charge mode anytime you want to start charging when a charging timer is turned on by performing the following:

1. Place the power switch in the OFF position.

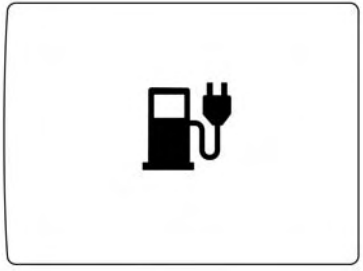

2. Push the immediate charge switch.
3. Connect the normal or trickle charge cable when the charging status indicator light changes to display immediate charge mode. For additional information, refer to "Charging status indicator lights" in this section.

NOTE:

- **You have 15 minutes to connect a normal or trickle charge connector to the vehicle after the immediate charge switch is pushed. If a charge connector is not connected to the vehicle within 15 minutes, the vehicle automatically returns to the previous setting.**
- **To cancel immediate charge mode push the immediate charge switch again.**
- **If the charge cable is disconnected, the Li-ion battery automatically switches to charging timer. To perform an immediate charge again, push the immediate charge switch and connect the charge cable.**
- **If the charge cable is already connected, push the immediate charge switch to start performing an immediate charge.**

CHARGING RELATED REMOTE FUNCTION (MODELS WITH NAVIGATION SYSTEM)

This vehicle incorporates a communication device that is called a TCU (Telematics Communication Unit). The communication connection between this unit and NISSAN Data Center allows for various remote function services.

- **Remote Battery status check:**

  The charging status of the Li-ion battery is available using the NissanConnect® EV & Services app or Owners Portal even if you are not in the vehicle.

- **Remote charge and remote climate control:**

  The function of starting the Li-ion battery charge or starting the heater and air conditioner is available using your personal computer or internet enabled smart phone.

- **Plug-in reminder:**

  A notification e-mail will be sent to your personal computer or internet enabled smart phone if the plug is not connected at the specific time you selected, after turning off the power switch.

NOTE:

- **Establishing the NissanConnect® EV & Services is necessary before using this service. For additional information, refer to the LEAF Navigation System Owner's Manual.**
- **To check the Li-ion battery charging status using an internet enabled smart phone or personal computer, the following conditions must be met:**
  - **The vehicle must be located in a cellular phone coverage area.**
  - **The cellular phone must be located in an area with cellular phone coverage.**
  - **If using a computer, the computer must be connected to the internet.**
  - **Some cellular phones are not compatible and cannot be used to check the Li-ion battery charging status. Please confirm beforehand.**
- **Certain remote functions require a compatible smart phone, which is not included with the vehicle.**
- **NissanConnect® EV & Services information system features are included through a subscription service which requires owner consent to activate. The subscription must be active to use these features.**
- **NissanConnect® EV & Services communications may be received at a verified e-mail address or by SMS/text messaging-enabled mobile phone.**
- **Standard text rates and/or data usage may apply depending on your carrier.**

CHARGING RELATED INDICATOR LIGHTS

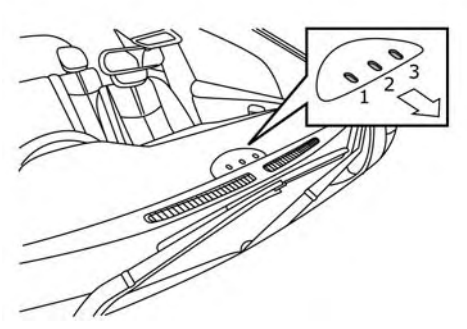

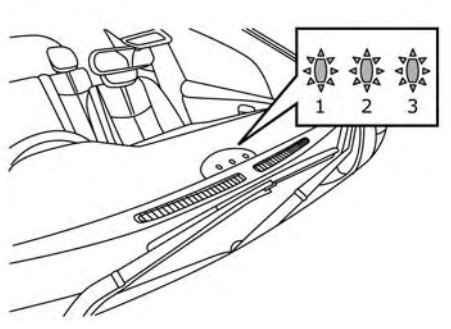

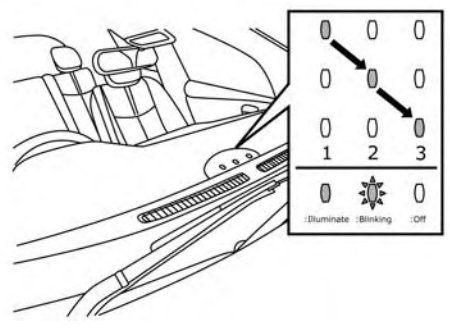

CHARGING STATUS INDICATOR LIGHTS

The charging status indicator lights ① to ③ display the charging status, and are visible from both inside and outside the vehicle.

When the normal charge connector lock is unlocked

All of the indicator lights, ① to ③, will flash and a beep will sound three times when the normal charge connector lock switch on the Intelligent Key or the charge port lid opener switch is pushed.

When the normal charge connector is connected incorrectly

All of the indicator lights, ① to ③, will flash and a beep will sound three times within 30 seconds when the charge connector is connected incorrectly to the normal charge port.

Ready for charging timer

If the charging timer is set, the indicator lights illuminate in order from ① to ③. The indicator lights turn off after approximately 5 minutes.

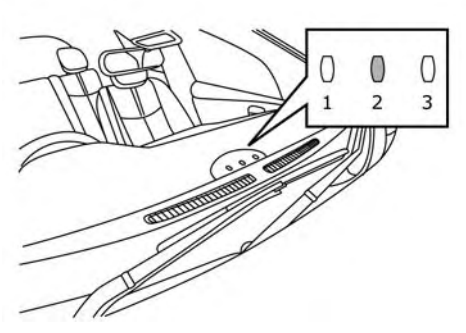

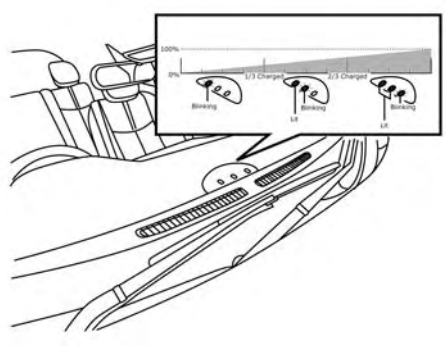

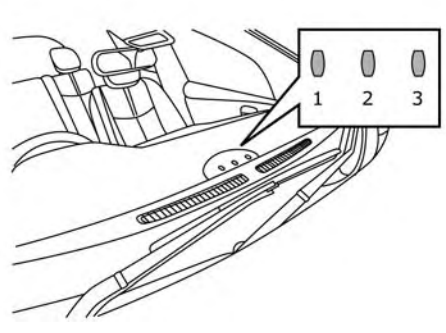

Ready for immediate charge

When the power switch is off and if the immediate charge switch is pushed while the charge cable is not connected, the indicator light ② illuminates.

This indicator light ② illuminates when the vehicle is ready for immediate charge. You have 15 minutes to connect the charge connector to the vehicle. If the charge connector is not connected within 15 minutes, the indicator light ② turns off and you must start the immediate charge mode again to charge the Li-ion battery.

When charging

When the Li-ion battery is being charged, the charging status indicator lights will change depending on the amount the Li-ion battery is charged.

*: This value is also displayed by the battery available charge gauge on the vehicle information display..

When fully charged

All of the indicator lights ① to ③ illuminate when the Li-ion battery is fully charged to the selected charging mode level.

The indicator lights turn off after approximately 5 minutes or when the charge connector is removed.

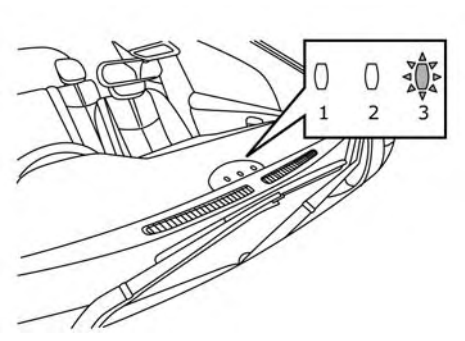

When the indicator light ③ flashes

The indicator light ③ flashes when the 12-volt battery is being charged. For additional information, refer to "Charging the 12-volt battery" in the "EV overview" section of this manual.

The indicator light will also flash for up to 5 minutes if the electrical power from the EVSE or charging device is interrupted during charging. Charging will restart automatically when the electrical power from the EVSE or charging device is restored if the normal charge connector is connected. The charge start beep will not sound when charging restarts.

The indicator will also flash when the following systems are operating:

- Climate Ctrl. Timer
- Remote climate control (if so equipped)
- Li-ion battery warmer (if so equipped)

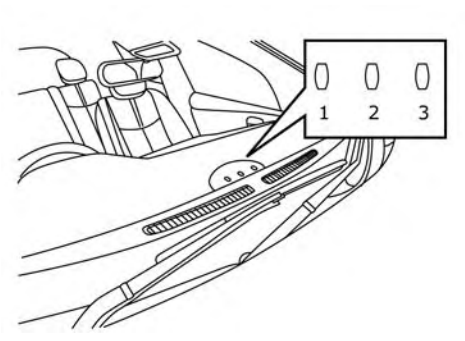

When not charging

None of the lights are illuminated when the Li-ion battery and 12-volt battery are not charging.

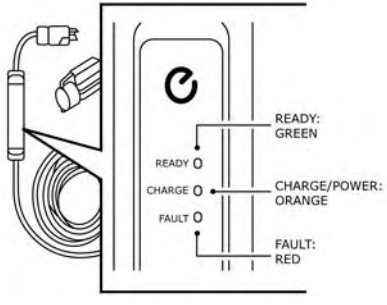

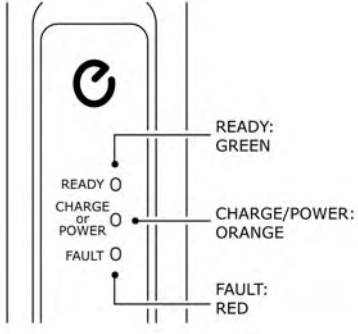

EVSE (ELECTRIC VEHICLE SUPPLY EQUIPMENT) CONTROL BOX INDICATOR LIGHT

When a charge is being performed, the charging status is shown by the indicator light that is on the EVSE control box.

An indicator light also indicates if there is an EVSE malfunction.

Meaning	Light ON	Blinking	Light OFF
Symbol	○	◎	●

READY	CHARGE or POWER	FAULT	Status and action to be taken
○	○	○	All LED lamps will light for a 1/2 second check when EVSE is first connected to an outlet.
○	●	●	After initial processing is completed, when the EVSE is not connected to the vehicle, or the EVSE is connected to the vehicle but charging is not being performed. For additional information, refer to "Charging troubleshooting guide" in this section.
○	○	●	While the Li-ion battery is being charged
●	●	●	If the EVSE control box indicator light does not illuminate after connecting the plug to the outlet, check the GFCI and circuit breaker for the outlet. If either the GFCI or breaker has tripped, the circuit may not be suitable for use with EVSE. You should have a qualified electrician inspect and repair the electrical circuit. If the GFCI breaker is not tripped, stop using the EVSE. It is recommended that you visit a NISSAN certified LEAF dealer.
◎	●	●	The EVSE could not detect sufficient grounding at outlet for reliable EV charging. Consult a qualified electrician to have the outlet checked.
◎	○	◎	When the temperature of the electrical plug is too hot or the EVSE is unable to detect the temperature of the electrical plug. The EVSE is restricting the charging current for safety according to the temperature of the electrical plug. POWER or CHARGE Lamp status: ○ = No charging current restricted. ◎ = Charge current restricted ● = Charge stopped This problem may be caused by a failure in the outlet. Stop using the outlet and consult a qualified electrician. If the same indication continues after checking an outlet, it is recommended that you visit a NISSAN certified LEAF dealer.
◎	◎	◎	
◎	●	◎	
◎	◎	○	L1 & L2 EVSE only The temperature detection circuit in the plug of the EVSE is malfunctioning. Power Lamp status: ◎ = Charge current reduced ● = Charge stopped Since the EVSE is restricting the charging current, it is recommended that you visit a NISSAN certified LEAF dealer.
◎	●	○	
○	● or ◎	○	This trouble is caused by a malfunction of the EVSE internal circuits. Stop using the EVSE immediately. It is recommended that you visit a NISSAN certified LEAF dealer.
○	●	◎	The EVSE detected leakage current or PWM signal error Stop using the EVSE immediately. It is recommended that you visit a NISSAN certified LEAF dealer.

CHARGING TROUBLESHOOTING GUIDE

Symptom	Possible cause	Possible solution
Charging cannot be performed.	The vehicle power switch is in the ON position.	Before charging, place the vehicle power switch in the OFF position.
	Both the normal charge connector and the quick charge connector (if so equipped) are connected at the same time.	The normal charge connector and the quick charge connector cannot be connected at the same time.
	The Li-ion battery is already fully charged.	Confirm the available Li-ion battery capacity remaining by checking the Li-ion battery available charge gauge. If the Li-ion battery charge gauge reaches 100%, the Li-ion battery is already fully charged and cannot be charged. Charging automatically turns off if the Li-ion battery is fully charged.
	The temperature of the Li-ion battery is too hot or cold to charge.	Confirm the Li-ion battery temperature by checking the Li-ion battery temperature gauge. If the gauge indicates the Li-ion battery is too hot (red zone) or too cold (blue zone), charging is not possible. Allow the Li-ion battery to cool or warm up before charging. For additional information, refer to "Li-ion battery temperature gauge" in the "Instruments and controls" section of this manual.
	The 12-volt battery is discharged.	If the vehicle electrical systems cannot be turned on even when the power switch is turned on, the 12V battery may be discharged. Charge or replace the 12V battery.
	The vehicle has a malfunction.	The vehicle may have a malfunction. Confirm if the warning light on the meter is illuminated. If a warning is displayed, stop charging. It is recommended that you visit a NISSAN certified LEAF dealer.
Normal charge or trickle charge cannot be performed.	There is no electrical power coming from the outlet.	Confirm that there has not been a power failure. Make sure the breaker is on. If an outlet with a timer device installed is used, power will only be available at the time set by the timer.
	The EVSE or charging device may have a malfunction.	If Genuine NISSAN EVSE is used, refer to "Charging Troubleshooting."
	The charge connector is not connected correctly.	Confirm the charge connector is connected correctly.
	Plug might not be connected correctly.	Confirm if the plug is connected correctly.
Immediate charge cannot be performed.	Charging timer has been set.	Turn off the charging timer. For additional information, refer to "Charging timer" in this section.

Symptom	Possible cause	Possible solution
Charging timer cannot be performed.	The charge cable is not connected.	Connect the charge cable.
	The time on the clock is wrong.	The charging timer function does not start charging based on the clock located on the vehicle information display. Adjust the clock. For additional information, refer to "Clock" in the "Instruments and controls" section of this manual. If the 12-volt battery is discharged or if the Li-ion battery is disconnected, the time setting must be updated. For models with Navigation System, there must be a GPS signal to adjust the timer setting clock.
	The immediate charge switch has been pushed.	Charging timer does not operate when immediate charge is selected.
	Charging timer has not been set.	Set the charging timer schedule. For additional information, refer to "Charging timer" in this section.
	Charging does not start because the charging timer start time and end time are set and the current time is before the set start time.	Confirm when the charging timer time is set to start charging. Change the charging timer setting to the desired charge time or push the immediate charge switch. For additional information, refer to "Charging timer" in this section.
	The charge cable is not connected.	Connect the charge cable beforehand.
Normal charge stops in the middle of charging.	There is no power coming from the outlet.	There may have been an electrical power failure, or the breaker may have failed. Charging will resume when the power source is reset.
	The charge cable has been disconnected.	Check that the charge cable has not been disconnected.
	Both the normal charge connector and the quick charge connector were connected at the same time.	If the normal charge connector and the quick charge connector are connected at the same time, charging will be stopped.
	Charging timer end time has been reached.	When the charging timer is set and the charge end time is reached, charging will be stopped, even if the Li-ion battery is not fully charged.
	The temperature of the Li-ion battery is too hot or too cold to charge.	Confirm the Li-ion battery temperature by checking the Li-ion battery temperature gauge. If the gauge indicates the Li-ion battery is too hot (red zone) or too cold (blue zone), charging is not possible. Allow the Li-ion battery to cool or warm up before charging. For additional information, refer to "Li-ion battery temperature gauge" in the "Instruments and controls" section of this manual.

Symptom	Possible cause	Possible solution
Quick charge cannot be performed.	Incorrect charge connector connection, not fully inserted or may not be locked.	Check that the charge connector is connected correctly and that it is locked.
	The self-diagnostic function of the quick charge device returns a negative result.	There is a possibility that the vehicle has a malfunction. Stop charging. It is recommended that you visit a NISSAN certified LEAF dealer.
	The power switch of the quick charger is off.	Check the power switch of the quick charger.
Quick charge stops in the middle of charging.	Charging is stopped by the quick charge timer.	Charging will stop depending on the timer function setting of the quick charge device. If you need to charge the Li-ion battery more, start the charging procedure again.
	The power supply for the quick charger is off.	Check whether the power supply for the quick charger is off.

NOTES

1 Safety–Seats, seat belts and supplemental restraint system

Seats 1-2
Front manual seat adjustment (for passenger's seat and if so equipped for driver's seat) 1-3
Front power seat adjustment (if so equipped for driver's seat) 1-4
Rear seats 1-6
Head restraints/headrests 1-7
Adjustable head restraint/headrest components 1-8
Non-adjustable head restraint/headrest components 1-8
Remove 1-9
Install 1-9
Adjust 1-10
Seat belts 1-11
Precautions on seat belt usage 1-11
Seat belt warning light 1-14
Pregnant women 1-14
Injured persons 1-14
Three-point type seat belt with retractor 1-14
Seat belt extenders 1-18
Seat belt maintenance 1-19
Child safety 1-19
Infants 1-20
Small children 1-20
Larger children 1-20
Child restraints 1-22
Precautions on child restraints 1-22
LATCH (Lower Anchors and Tethers for CHildren) system 1-24
Rear-facing child restraint installation using LATCH 1-27
Rear-facing child restraint installation using the seat belts 1-29
Forward-facing child restraint installation using LATCH 1-32
Forward-facing child restraint installation using the seat belts 1-35
Booster seats 1-40
Supplemental Restraint System (SRS) 1-43
Precautions on SRS 1-43
Supplemental air bag warning labels 1-61
Supplemental air bag warning light 1-61

Sit upright and well back.

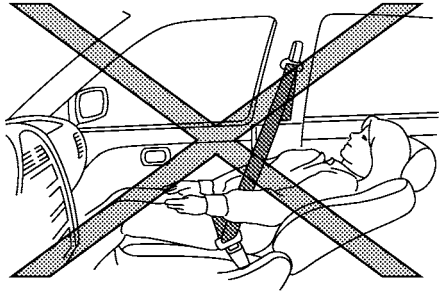

WARNING

- **Do not ride in a moving vehicle when the seatback is reclined. This can be dangerous. The shoulder belt will not be against your body. In an accident, you could be thrown into it and receive neck or other serious injuries. You could also slide under the lap belt and receive serious internal injuries.**

- **For the most effective protection when the vehicle is in motion, the seat should be upright. Always sit well back and upright in the seat with both feet on the floor and adjust the seat properly. For additional information, refer to "Precautions on seat belt usage" in this section.**
- **After adjustment, gently rock in the seat to make sure it is securely locked.**

- **Do not leave children unattended inside the vehicle. They could unknowingly activate switches or controls or make the vehicle move. Unattended children could become involved in serious accidents.**
- **To help avoid risk of injury or death through unintended operation of the vehicle and/or its systems, do not leave children, people who require the assistance of others or pets unattended in your vehicle. Additionally, the temperature inside a closed vehicle on a warm day can quickly become high enough to cause a significant risk of injury or death to people and pets.**
- **Do not adjust the driver's seat while driving so full attention may be given to vehicle operation. The seat may move suddenly and could cause loss of control of the vehicle.**
- **The seatback should not be reclined any more than needed for comfort. Seat belts are most effective when the passenger sits well back and straight up in the seat. If the seatback is reclined, the risk of sliding under the lap belt and being injured is increased.**

CAUTION

When adjusting the seat positions, be sure not to contact any moving parts to avoid possible injuries and/or damage.

FRONT MANUAL SEAT ADJUSTMENT (FOR PASSENGER'S SEAT AND IF SO EQUIPPED FOR DRIVER'S SEAT)

Your vehicle seats can be adjusted manually. For additional information about adjusting the seats, refer to the steps outlined in this section.

Forward and backward

Pull the bar up and hold it while sliding the seat forward or backward to the preferred position. Release the bar to lock the seat in position.

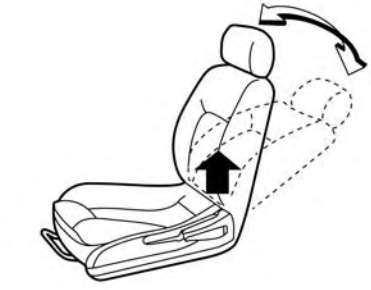

Reclining

To recline the seatback, pull the lever up and lean back. To bring the seatback forward, pull the lever up and lean your body forward. Release the lever to lock the seatback in position.

The reclining feature allows adjustment of the seatback for occupants of different sizes for added comfort and to help obtain proper seat belt fit. For additional information, refer to "Precautions on seat belt usage" in this section. Also, the seatback can be reclined to allow occupants to rest when the vehicle is stopped and the vehicle is in the P (Park) position.

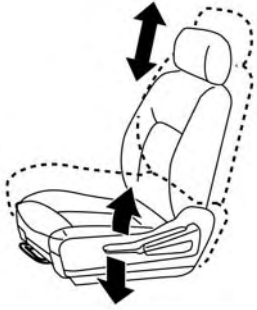

Seat lifter (driver's seat)

Pull up or push down the adjusting lever to adjust the seat height to the preferred position.

FRONT POWER SEAT ADJUSTMENT (IF SO EQUIPPED FOR DRIVER'S SEAT)

Operating tips

- The power seat motor has an auto-reset overload protection circuit. If the motor stops during operation, wait 30 seconds then reactivate the switch.
- Do not operate the power seat switch for a long period of time when the system is not in the READY mode. This will discharge the battery.

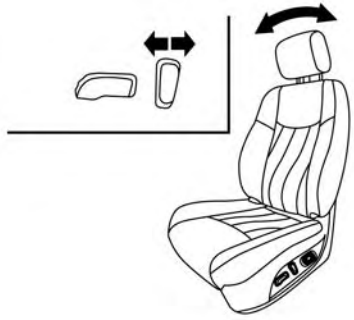

Forward and backward

Moving the switch as shown will slide the seat forward or backward to the desired position.

Reclining

Move the recline switch as shown until the desired angle is obtained.

The reclining feature allows adjustment of the seatback for occupants of different sizes for added comfort and to help obtain proper seat belt fit. For additional information, refer to "Precautions on seat belt usage" in this section. Also, the seatback can

be reclined to allow occupants to rest when the vehicle is stopped and the shift lever is in P (Park).

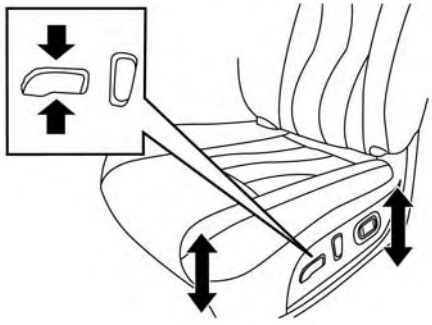

Type A (if so equipped)

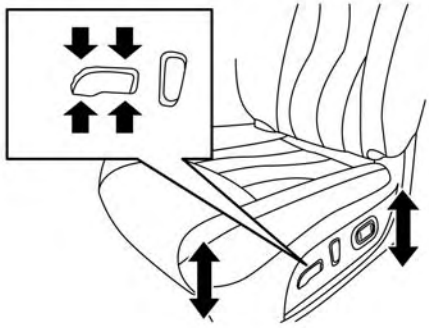

Type B (if so equipped)

Seat lifter

Move the switch as shown to adjust the angle (if so equipped) and height of the seat cushion.

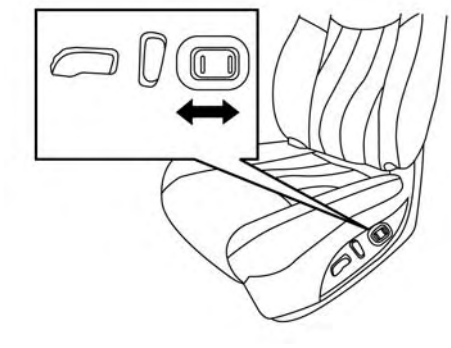

Lumbar support

The lumbar support feature provides adjustable lower back support to the driver. Move the switch as shown to adjust the seat lumbar area.

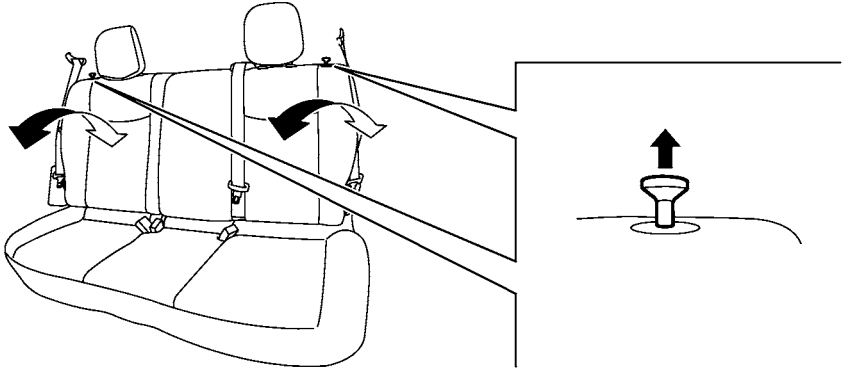

REAR SEATS

Folding

Before folding the rear seats:

- Secure the seat belts on the seat belt hooks located on the side wall. For additional information, refer to "Seat belt hook" in this section.

To fold down the seatback, pull the release knob.

To return the seatback to the seating position, lift up each seatback and push it to the upright position until it is latched.

WARNING

- **Do not fold down the rear seats when occupants are in the rear seat area or any objects are on the rear seats.**
- **Never allow anyone to ride in the cargo area or on the rear seats when they are in the folded-down position. Use of these areas by passengers without proper restraints could result in serious injury or death in an accident or sudden stop.**

- **Properly secure all cargo with ropes or straps to help prevent it from sliding or shifting. Do not place cargo higher than the seatbacks. In a sudden stop or collision, unsecured cargo could cause personal injury.**
- **When returning the seatbacks to the upright position, be certain they are completely secured in the latched position. If they are not completely secured, passengers may be injured in an accident or sudden stop.**

HEAD RESTRAINTS/HEADRESTS

WARNING

Head restraints/headrests supplement the other vehicle safety systems. They may provide additional protection against injury in certain rear end collisions. Adjustable head restraints/headrests must be adjusted properly, as specified in this section. Check the adjustment after someone else uses the seat. Do not attach anything to the head restraint/headrest stalks or remove the head restraints/headrests. Do not use the seat if the head restraint/headrest has been removed. If the head restraint/headrest was removed, reinstall and properly adjust the head restraint/headrest before an occupant uses the seating position. Failure to follow these instructions can reduce the effectiveness of the head restraint/headrest. This may increase the risk of serious injury or death in a collision.

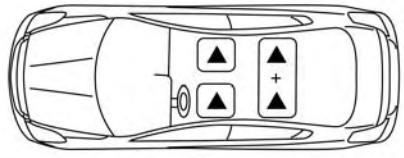

The illustration shows the seating positions equipped with a head restraint/headrest.

▲ Indicates the seating position is equipped with a head restraint.

+ Indicates the seating position is not equipped with a head restraint or headrest (if applicable).

- Your vehicle is equipped with a head restraint/headrest that may be integrated, adjustable or non-adjustable.

- Adjustable head restraints/headrests have multiple notches along the stalks to lock them in a desired adjustment position.
- The non-adjustable head restraints/headrests have a single locking notch to secure them to the seat frame.
- Proper Adjustment:
  - For the adjustable type, align the head restraint/headrest so the center of your ear is approximately level with the center of the head restraint/headrest.
  - If your ear position is still higher than the recommended alignment, place the head restraint/headrest at the highest position.
- If the head restraint/headrest has been removed, ensure that it is reinstalled and locked in place before riding in that designated seating position.

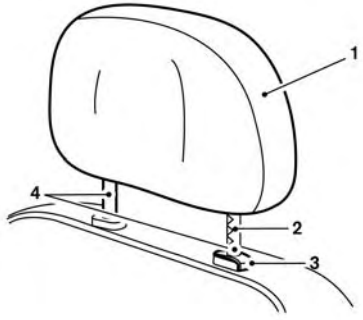

ADJUSTABLE HEAD RESTRAINT/ HEADREST COMPONENTS

1. Removable head restraint/headrest
2. Multiple notches
3. Lock knob
4. Stalks

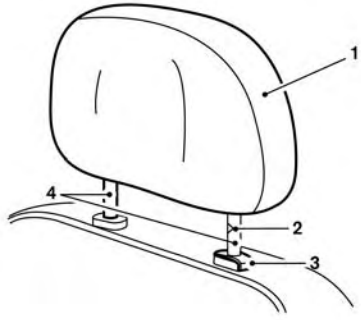

NON-ADJUSTABLE HEAD RESTRAINT/HEADREST COMPONENTS

1. Removable head restraint/headrest
2. Single notch
3. Lock knob
4. Stalks

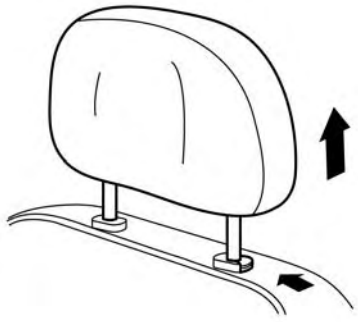

REMOVE

Use the following procedure to remove the head restraint/headrest.

1. Pull the head restraint/headrest up to the highest position.
2. Push and hold the lock knob.
3. Remove the head restraint/headrest from the seat.
4. Store the head restraint/headrest properly in a secure place so it is not loose in the vehicle.
5. Reinstall and properly adjust the head restraint/headrest before an occupant uses the seating position.

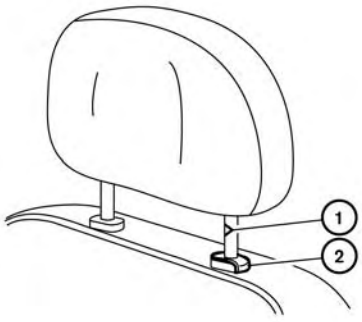

INSTALL

1. Align the head restraint/headrest stalks with the holes in the seat. Make sure the head restraint/headrest is facing the correct direction. The stalk with the notch (notches) ① must be installed in the hole with the lock knob ②.
2. Push and hold the lock knob and push the head restraint/headrest down.
3. Properly adjust the head restraint/headrest before an occupant uses the seating position.

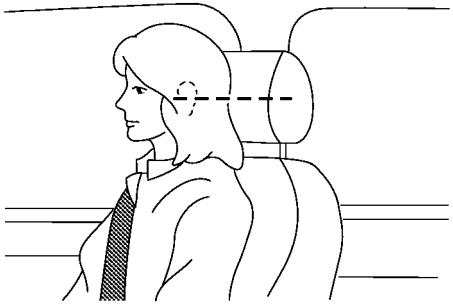

ADJUST

For adjustable head restraint/headrest

Adjust the head restraint/headrest so the center is level with the center of your ears. If your ear position is still higher than the recommended alignment, place the head restraint/headrest at the highest position.

For non-adjustable head restraint/headrest

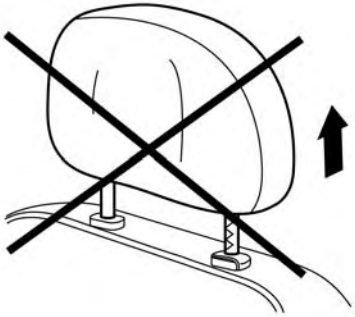

Make sure the head restraint/headrest is positioned so the lock knob is engaged in the notch before riding in that designated seating position.

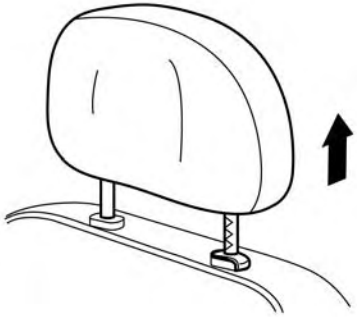

Raise

To raise the head restraint/headrest, pull it up.

Make sure the head restraint/headrest is positioned so the lock knob is engaged in the notch before riding in that designated seating position.

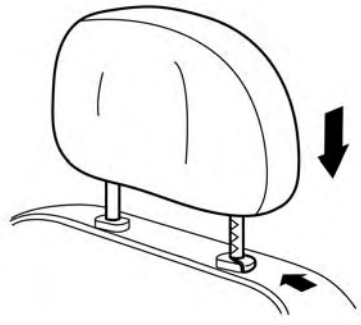

Lower

To lower, push and hold the lock knob and push the head restraint/headrest down

Make sure the head restraint/headrest is positioned so the lock knob is engaged in the notch before riding in that designated seating position.

SEAT BELTS

PRECAUTIONS ON SEAT BELT USAGE

If you are wearing your seat belt properly adjusted, and you are sitting upright and well back in your seat with both feet on the floor, your chances of being injured or killed in an accident and/or the severity of injury may be greatly reduced. NISSAN strongly encourages you and all of your passengers to buckle up every time you drive, even if your seating position includes a supplemental air bag.

Most U.S. states and Canadian provinces or territories specify that seat belts be worn at all times when a vehicle is being driven.

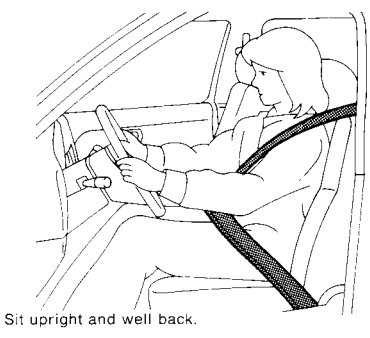
Sit upright and well back.

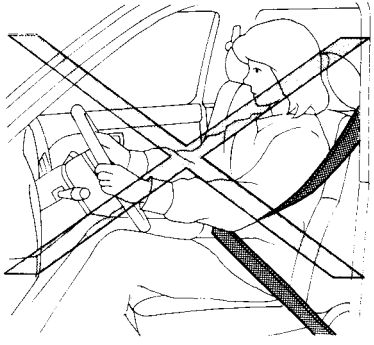

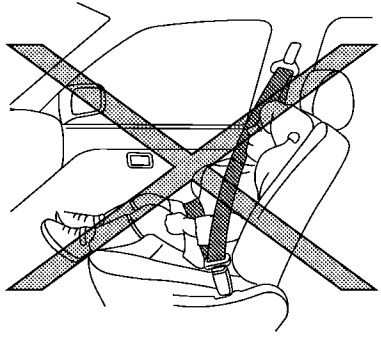

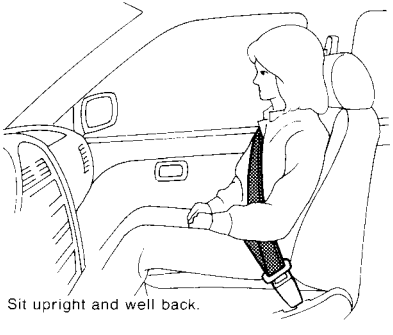
Sit upright and well back.

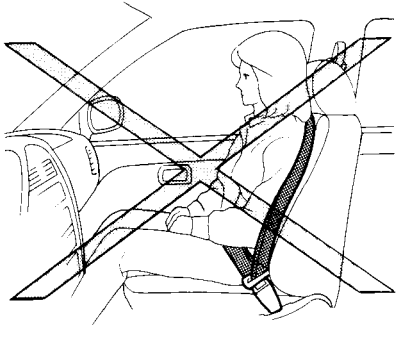

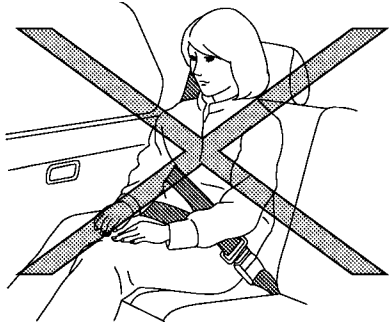

WARNING

- Every person who drives or rides in this vehicle should use a seat belt at all times. Children should be in the rear seats and in an appropriate restraint.
- The seat belt should be properly adjusted to a snug fit. Failure to do so may reduce the effectiveness of the entire restraint system and increase the chance or severity of injury in an accident. Serious injury or death can occur if the seat belt is not worn properly.
- Always route the shoulder belt over your shoulder and across your chest. Never put the belt behind your back, under your arm or across your neck. The belt should be away from your face and neck, but not falling off your shoulder.
- Position the lap belt as low and snug as possible AROUND THE HIPS, NOT THE WAIST. A lap belt worn too high could increase the risk of internal injuries in an accident.
- Be sure the seat belt tongue is securely fastened to the proper buckle.
- Do not wear the seat belt inside out or twisted. Doing so may reduce its effectiveness.
- Do not allow more than one person to use the same seat belt.
- Never carry more people in the vehicle than there are seat belts.
- If the seat belt warning light glows continuously while the power switch is turned ON with all doors closed and all seat belts fastened, it may indicate a malfunction in the system. Have the system checked. It is recommended that you visit a NISSAN certified LEAF dealer for this service.
- No changes should be made to the seat belt system. For example, do not modify the seat belt, add material, or install devices that may change the seat belt routing or tension. Doing so may affect the operation of the seat belt system. Modifying or tampering with the seat belt system may result in serious personal injury.
- Once seat belt pretensioner(s) have activated, they cannot be reused and must be replaced together with the retractor. It is recommended that you visit a NISSAN certified LEAF dealer for this service.
- All seat belt assemblies, including retractors and attaching hardware, should be inspected after any collision. It is recommended that you visit a NISSAN certified LEAF dealer for this service. NISSAN recommends that all seat belt assemblies in use during a collision be replaced unless the collision was minor and the belts show no damage and continue to operate properly. Seat belt assemblies not in use during a collision should also be inspected and replaced if either damage or improper operation is noted.
- All child restraints and attaching hardware should be inspected after any collision. Always follow the restraint manufacturer's inspection instructions and replacement recommendations. The child restraints should be replaced if they are damaged.

SEAT BELT WARNING LIGHT

Both the driver's and passenger's front seats are equipped with a seat belt warning light. The warning light, located on the instrument panel, will show the status of the driver and passenger seat belt.

NOTE:
The front passenger seat belt warning light will not light up if the seat is not occupied.

For additional information, refer to "Warning lights, indicator lights and audible reminders" in the "Instruments and controls" section of this manual.

PREGNANT WOMEN

NISSAN recommends that pregnant women use seat belts. The seat belt should be worn snug, and always position the lap belt as low as possible around the hips, not the waist. Place the shoulder belt over your shoulder and across your chest. Never put the lap/shoulder belt over your abdominal area. Contact your doctor for specific recommendations.

INJURED PERSONS

NISSAN recommends that injured persons use seat belts, depending on the injury. Check with your doctor for specific recommendations.

THREE-POINT TYPE SEAT BELT WITH RETRACTOR

WARNING

- **Every person who drives or rides in this vehicle should use a seat belt at all times.**
- **Do not ride in a moving vehicle when the seatback is reclined. This can be dangerous. The shoulder belt will not be against your body. In an accident, you could be thrown into it and receive neck or other serious injuries. You could also slide under the lap belt and receive serious internal injuries.**
- **For the most effective protection when the vehicle is in motion, the seat should be upright. Always sit well back and upright in the seat with both feet on the floor and adjust the seat belt properly.**
- **Do not allow children to play with the seat belts. Most seating positions are equipped with Automatic Locking Retractor (ALR) mode seat belts. If the seat belt becomes wrapped around a child's neck with the ALR mode activated, the child can be seriously injured or killed if the seat belt retracts and becomes tight. This can occur even if the vehicle is parked. Unbuckle the seat belt to release the child. If the seat belt cannot be unbuckled or is already unbuckled, release the child by cutting the seat belt with a suitable tool**

(such as a knife or scissors) to release the seat belt.

Fastening the seat belts

1. Adjust the seat. For additional information, refer to "Seats" in this section.

2. Slowly pull the seat belt out of the retractor and insert the tongue into the buckle until you hear and feel the latch engage.
   - **The retractor is designed to lock during a sudden stop or on impact. A slow pulling motion permits the belt to move and allows you some freedom of movement in the seat.**
   - **If the seat belt cannot be pulled from its fully retracted position, firmly pull the belt and release it. Then smoothly pull the belt out of the retractor.**
3. Position the lap belt portion **low and snug on the hips** as shown.
4. Pull the shoulder belt portion toward the retractor to take up extra slack. Be sure the shoulder belt is routed over your shoulder and across your chest.

The front passenger seat and the rear seating positions three-point seat belts have two modes of operation:

- Emergency Locking Retractor (ELR)
- Automatic Locking Retractor (ALR)

The ELR mode allows the seat belt to extend and retract to allow the driver and passengers some freedom of movement in the seat. The ELR locks the seat belt when the vehicle slows down rapidly or during certain impacts.

The ALR mode (child restraint mode) locks the seat belt for child restraint installation.

When ALR mode is activated the seat belt cannot be extended again until the seat belt tongue is detached from the buckle and fully retracted. The seat belt returns to the ELR mode after the seat belt fully retracts. For additional information, refer to "Child restraints" in this section.

The ALR mode should be used only for child restraint installation. During normal seat belt use by an occupant, the ALR mode should not be activated. If it is activated, it may cause uncomfortable seat belt tension. It can also change the operation of the front passenger air bag. For additional information, refer to "Front passenger air bag and status light" in this section.

WARNING

When fastening the seat belts, be certain that seatbacks are completely secured in the latched position. If they are not completely secured, passengers may be injured in an accident or sudden stop.

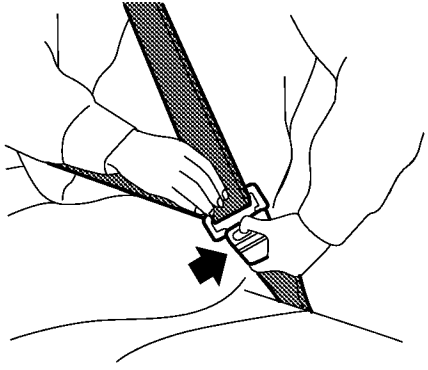

Unfastening the seat belts

To unfasten the seat belt, push the button on the buckle. The seat belt automatically retracts.

Checking seat belt operation

Seat belt retractors are designed to lock seat belt movement by two separate methods:

- When the belt is pulled quickly from the retractor
- When the vehicle slows down rapidly

To increase your confidence in the seat belts, check the operation as follows:

- Grasp the shoulder belt and pull forward quickly. The retractor should lock and restrict further belt movement.

If the retractor does not lock during this check, get the system checked. It is recommended that you visit a NISSAN certified LEAF dealer for this service, or to learn more about seat belt operation.

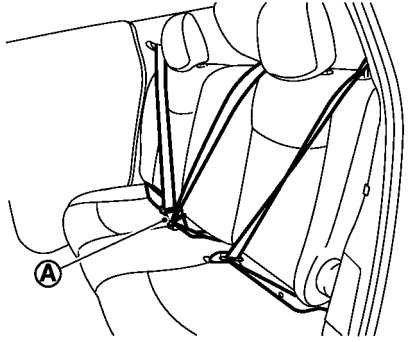

Center of rear seat

Selecting correct set of seat belts:

The center seat belt buckle is identified by the CENTER mark Ⓐ. The center seat belt tongue can be fastened **only** into the center seat belt buckle.

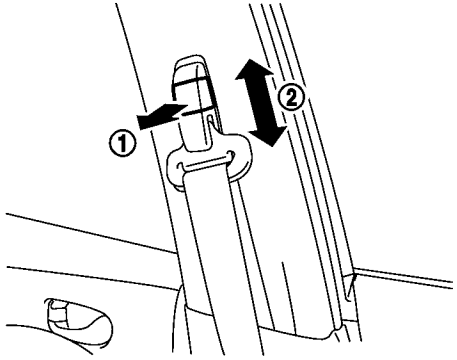

Shoulder belt height adjustment (front seats)

The shoulder belt anchor height should be adjusted to the position that is best for you. For additional information, refer to "Precautions on seat belt usage" in this section.

To adjust, pull the adjustment button ①, and then move the shoulder belt anchor to the preferred position ② so that the belt passes over the center of the shoulder. The belt should be away from your face and neck, but not falling off of your shoulder. Release the adjustment button to lock the shoulder belt anchor into position.

WARNING

- **After adjustment, release the adjustment button and then try to move the shoulder belt anchor up and down to make sure that it is securely fixed in position.**
- **The shoulder belt anchor height should be adjusted to the position that is best for you. Failure to do so may reduce the effectiveness of the entire restraint system and increase the chance or severity of injury in an accident.**

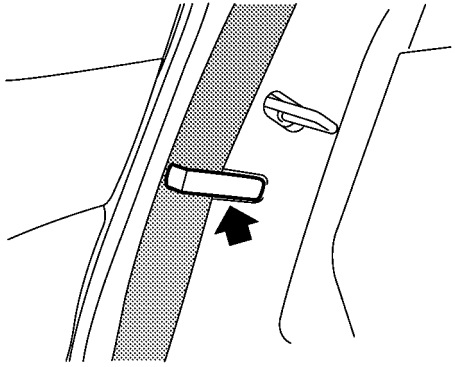

Seat belt hook

When the rear seat belts are not in use and when folding down the rear seats, hook the rear outer seat belts on the seat belt hooks.

SEAT BELT EXTENDERS

If, because of body size or driving position, it is not possible to properly fit the lap/shoulder belt and fasten it, an extender that is compatible with the installed seat belts is available for purchase. The extender adds approximately 8 in (200 mm) of length and may be used for either the driver or front passenger seating position. It is recommended that you visit a NISSAN certified LEAF dealer for assistance with purchasing an extender if an extender is required.

WARNING

- **Only NISSAN seat belt extenders, made by the same company which made the original equipment seat belts, should be used with NISSAN seat belts.**
- **Adults and children who can use the standard seat belt should not use an extender. Such unnecessary use could result in serious personal injury in the event of an accident.**
- **Never use seat belt extenders to install child restraints. If the child restraint is not secured properly, the child could be seriously injured or killed in a collision or a sudden stop.**

SEAT BELT MAINTENANCE

- **To clean the seat belt webbing,** apply a mild soap solution or any solution recommended for cleaning upholstery or carpets. Then wipe with a cloth and allow the seat belts to dry in the shade. Do not allow the seat belts to retract until they are completely dry.
- **If dirt builds up in the shoulder belt guide of the seat belt anchors,** the seat belts may retract slowly. Wipe the shoulder belt guide with a clean, dry cloth.
- **Periodically check to see that the seat belt and the metal components**, such as buckles, tongues, retractors, flexible wires and anchors, work properly. If loose parts, deterioration, cuts or other damage on the webbing is found, the entire seat belt assembly should be replaced.

CHILD SAFETY

WARNING

Do not allow children to play with the seat belts. Most seating positions are equipped with Automatic Locking Retractor (ALR) mode seat belts. If the seat belt becomes wrapped around a child's neck with the ALR mode activated, the child can be seriously injured or killed if the seat belt retracts and becomes tight. This can occur even if the vehicle is parked. Unbuckle the seat belt to release the child. If the seat belt cannot be unbuckled or is already unbuckled, release the child by cutting the seat belt with a suitable tool (such as a knife or scissors) to release the seat belt.

Children need adults to help protect them. They need to be properly restrained.

In addition to the general information in this manual, child safety information is available from many other sources, including doctors, teachers, government traffic safety offices, and community organizations. Every child is different, so be sure to learn the best way to transport your child.

There are three basic types of child restraint systems:

- Rear-facing child restraint
- Forward-facing child restraint
- Booster seat

The proper restraint depends on the child's size. Generally, infants up to about 1 year and less than 20 lbs. (9 kg) should be placed in rear-facing child restraints. Forward-facing child restraints are available for children who outgrow rear-facing child restraints and are at least 1 year old. Booster seats are used to help position a vehicle lap/shoulder belt on a child who can no longer use a forward-facing child restraint.

WARNING

Infants and children need special protection. The vehicle's seat belts may not fit them properly. The shoulder belt may come too close to the face or neck. The lap belt may not fit over their small hip bones. In an accident, an improperly fitting seat belt could cause serious or fatal injury. Always use appropriate child restraints.

All U.S. states and Canadian provinces or territories require the use of approved child restraints for infants and small children. For additional information, refer to "Child restraints" in this section.

A child restraint may be secured in the vehicle by using either the LATCH (Lower Anchor and Tethers for CHildren) system or with the vehicle seat belt. For additional information, refer to "Child restraints" in this section.

NISSAN recommends that all pre-teens and children be restrained in the rear seat. According to accident statistics, children are safer when properly restrained in the rear seat than in the front seat.

This is especially important because your vehicle has a supplemental restraint system (air bag system) for the front passenger. For additional information, refer to "Supplemental Restraint System (SRS)" in this section.

INFANTS

Infants up to at least 1 year old should be placed in a rear-facing child restraint. NISSAN recommends that infants be placed in child restraints that comply with Federal Motor Vehicle Safety Standards or Canadian Motor Vehicle Safety Standards. You should choose a child restraint that fits your vehicle and always follow the manufacturer's instructions for installation and use.

SMALL CHILDREN

Children that are over 1 year old and weigh at least 20 lbs. (9 kg) should remain in a rear-facing child restraint as long as possible up to the height or weight limit of the child restraint. Children who outgrow the height or weight limit of the rear-facing child restraint and are at least 1 year old should be secured in a forward-facing child restraint with a harness. Refer to the manufacturer's instructions for minimum and maximum weight and height recommendations. NISSAN recommends that small children be placed in child restraints that comply with Federal Motor Vehicle Safety Standards or Canadian Motor Vehicle Safety Standards. You should choose a child restraint that fits your vehicle and always follow the manufacturer's instructions for installation and use.

LARGER CHILDREN

Children should remain in a forward-facing child restraint with a harness until they reach the maximum height or weight limit allowed by the child restraint manufacturer.

Once a child outgrows the height or weight limit of the harness-equipped forward-facing child restraint, NISSAN recommends that the child be placed in a commercially available booster seat to obtain proper seat belt fit. For a seat belt to fit properly, the booster seat should raise the child so that the shoulder belt is properly positioned across the chest and the top, middle portion of the shoulder. The shoulder belt should not cross the neck or face and should not fall off the shoulder. The lap belt should lie snugly across the lower hips or upper thighs, not the abdomen. A booster seat can only be used in seating positions that have a three-point type seat belt. The booster seat should fit the vehicle seat and have a label certifying that it complies with Federal Motor Vehicle Safety Standards or Canadian Motor Vehicle Safety Standards.

A booster seat should be used until the child can pass the seat belt fit test below:

- Are the child's back and hips against the vehicle seatback?
- Is the child able to sit without slouching?
- Do the child's knees bend easily over the front edge of the seat with feet flat on the floor?
- Can the child safely wear the seat belt (lap belt low and snug across the hips and shoulder belt across mid-chest and shoulder)?
- Is the child able to use the properly adjusted head restraint/headrest?
- Will the child be able to stay in position for the entire ride?

If you answered no to any of these questions, the child should remain in a booster seat using a three-point type seat belt.

NOTE:
Laws in some communities may follow different guidelines. Check local and state regulations to confirm your child is using the correct restraint system before traveling.

WARNING

Never let a child stand or kneel on any seat and do not allow a child in the cargo areas. The child could be seriously injured or killed in an accident or sudden stop.

CHILD RESTRAINTS

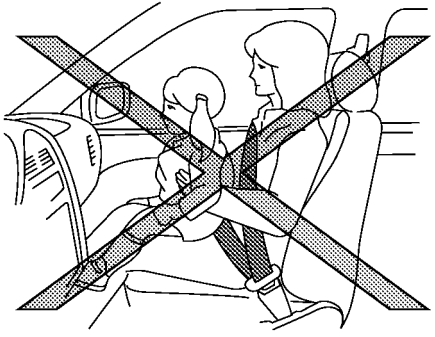

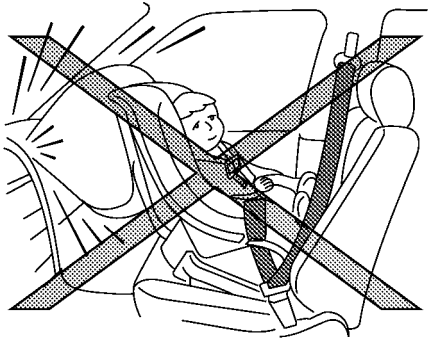

PRECAUTIONS ON CHILD RESTRAINTS

WARNING

- **Failure to follow the warnings and instructions for proper use and installation of child restraints could result in serious injury or death of a child or other passengers in a sudden stop or collision:**
  - **The child restraint must be used and installed properly. Always follow all of the child restraint manufacturer's instructions for installation and use.**
  - **Infants and children should never be held on anyone's lap. Even the strongest adult cannot resist the forces of a collision.**
  - **Do not put a seat belt around both a child and another passenger.**
  - **NISSAN recommends that all child restraints be installed in the rear seat. Studies show that children are safer when properly restrained in the rear seat than in the front seat. If you must install a forward-facing child restraint in the front seat, refer to "Forward-facing child restraint installation using the seat belts" in this section.**
  - **Even with the NISSAN Advanced Air Bag System, never install a rear-facing child restraint in the front seat. An inflating air bag could seriously injure or kill a child. A rear-facing child restraint must only be used in the rear seat.**
  - **Be sure to purchase a child restraint that will fit the child and vehicle. Some child restraints may not fit properly in your vehicle.**
  - **Child restraint anchorages are designed to withstand only those loads imposed by correctly fitted**

child restraints. Under no circumstances are they to be used to attach adult seat belts, or other items or equipment to the vehicle. Doing so could damage the child restraint anchorages. The child restraint will not be properly installed using the damaged anchorage, and a child could be seriously injured or killed in a collision.

- **Never use the anchor points for adult seat belts or other items.**
- **A child restraint with a top tether strap should not be used in the front passenger seat.**
- **Keep seatbacks as upright as possible after fitting the child restraint.**
- **Infants and children should always be placed in an appropriate child restraint while in the vehicle.**

- **When the child restraint is not in use, keep it secured with the LATCH system or a seat belt. In a sudden stop or collision, loose objects can injure occupants or damage the vehicle.**

CAUTION

A child restraint in a closed vehicle can become very hot. Check the seating surface and buckles before placing a child in the child restraint.

This vehicle is equipped with a universal child restraint anchor system, referred to as the LATCH (Lower Anchors and Tethers for CHildren) system. Some child restraints include rigid or webbing-mounted attachments that can be connected to these anchors.

For additional information, refer to "LATCH (Lower Anchors and Tethers for CHildren) system" in this section.

If you do not have a LATCH compatible child restraint, the vehicle seat belts can be used.

Several manufacturers offer child restraints for infants and small children of various sizes. When selecting any child restraint, keep the following points in mind:

- Choose only a restraint with a label certifying that it complies with Federal Motor Vehicle Safety Standard 213 or Canadian Motor Vehicle Safety Standard 213.
- Check the child restraint in your vehicle to be sure it is compatible with the vehicle's seat and seat belt system.
- If the child restraint is compatible with your vehicle, place your child in the child restraint and check the various adjustments to be sure the child restraint is compatible with your child. Choose a child restraint that is designed for your child's height and weight. Always follow all recommended procedures.
- If the combined weight of the child and child restraint is less than 65 lbs. (29.5 kg), you may use either the LATCH anchors or the seat belt to install the child restraint (not both at the same time).
- If the combined weight of the child and child restraint is greater than 65 lbs. (29.5 kg), use the vehicle's seat belt (not the lower anchors) to install the child restraint.
- Be sure to follow the child restraint manufacturer's instructions for installation.

All U.S. states and Canadian provinces or territories require that infants and small children be restrained in an approved child restraint at all times while the vehicle is being operated. Canadian law requires the top tether strap on forward-facing child restraints be secured to the designated anchor point on the vehicle.

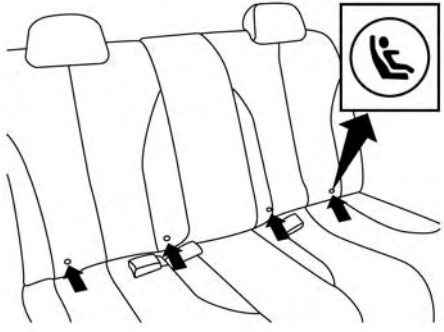

LATCH (LOWER ANCHORS AND TETHERS FOR CHILDREN) SYSTEM

Your vehicle is equipped with special anchor points that are used with LATCH system compatible child restraints. This system may also be referred to as the ISOFIX or ISOFIX compatible system. With this system, you do not have to use a vehicle seat belt to secure the child restraint unless the combined weight of the child and child restraint exceeds 65 lbs. (29.5 kg). If the combined weight of the child and child restraint is greater than 65 lbs. (29.5 kg), use the vehicle's seat belt (not the lower anchors) to install the child restraint. Be sure to follow the child restraint manufacturer's instructions for installation.

The LATCH lower anchor points are provided to install child restraints in the rear outboard seating positions only. Do not attempt to install a child restraint in the center position using the LATCH lower anchors.

LATCH lower anchor

WARNING

Failure to follow the warnings and instructions for proper use and installation of child restraints could result in serious injury or death of a child or other passengers in a sudden stop or collision:

- **Attach LATCH system compatible child restraints only at the locations shown in the illustration.**
- **Do not secure a child restraint in the center rear seating position using the LATCH lower anchors. The child restraint will not be secured properly.**

- **Inspect the lower anchors by inserting your fingers into the lower anchor area. Feel to make sure there are no obstructions over the anchors such as seat belt webbing or seat cushion material. The child restraint will not be secured properly if the lower anchors are obstructed.**
- **Child restraint anchorages are designed to withstand only those loads imposed by correctly fitted child restraints. Under no circumstances are they to be used to attach adult seat belts, or other items or equipment to the vehicle. Doing so could damage the child restraint anchorages. The child restraint will not be properly installed using the damaged anchorage, and a child could be seriously injured or killed in a collision.**

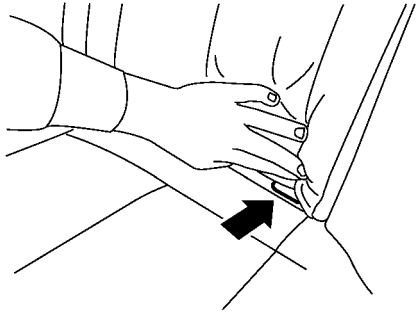

LATCH lower anchor location

LATCH lower anchor location

The LATCH lower anchors are located at the rear of the seat cushion near the seatback. A label is attached to the seatback to help you locate the LATCH lower anchors.

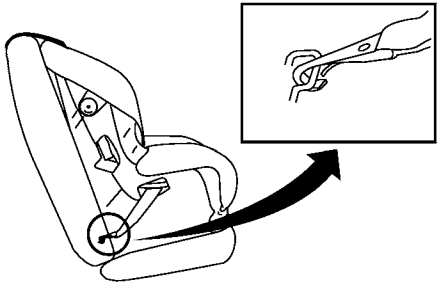

LATCH webbing-mounted attachment

Installing child restraint LATCH lower anchor attachments

LATCH compatible child restraints include two rigid or webbing-mounted attachments that can be connected to two anchors located at certain seating positions in your vehicle. With this system, you do not have to use a vehicle seat belt to secure the child restraint. Check your child restraint for a label stating that it is compatible with the LATCH system. This information may also be in the instructions provided by the child restraint manufacturer.

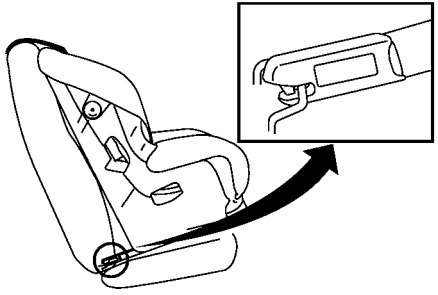

LATCH rigid-mounted attachment

When installing a child restraint, carefully read and follow the instructions in this manual and those supplied with the child restraint.

Top tether anchor

WARNING

- **If the tonneau cover (if so equipped) contacts the top tether strap when it is attached to the top tether anchor, remove the tonneau cover (if so equipped) from the vehicle or secure it on the cargo floor below its attachment location. If the tonneau cover (if so equipped) is not removed, it may damage the top tether strap during a collision. Your child could be seriously injured or killed in a collision if the child restraint top tether strap is damaged.**
- **Do not allow cargo to contact the top tether strap when it is attached to the top tether anchor. Properly secure the cargo so it does not contact the top tether strap. Cargo that is not properly secured or that contacts the top tether strap may damage the top tether strap during a collision. Your child could be seriously injured or killed in a collision if the child restraint top tether strap is damaged.**
- **Child restraint anchorages are designed to withstand only those loads imposed by correctly fitted child restraints. Under no circumstances are they to be used to attach adult seat belts, or other items or equipment to the vehicle. Doing so could damage the child restraint anchorages. The child restraint will not be properly installed using the damaged anchorage, and a child could be seriously injured or killed in a collision.**

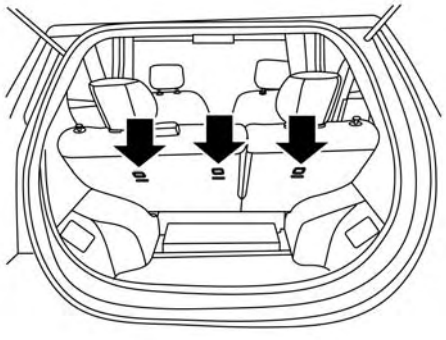

Top tether anchor point locations:

Anchor points are located on the back side of the seatbacks.

The child restraint top tether strap must be used when installing child restraints with the LATCH lower anchor attachments or seat belts. For additional information, refer to "Installing top tether strap" in this section.

If you have any questions when installing a top tether strap, it is recommended that you visit a NISSAN certified LEAF dealer for details.

REAR-FACING CHILD RESTRAINT INSTALLATION USING LATCH

For additional information, refer to all Warnings and Cautions in "Child safety" and "Child restraints" in this section before installing a child restraint.

Do not use the lower anchors if the combined weight of the child and the child restraint exceeds 65 lbs. (29.5 kg). If the combined weight of the child and the child restraint is greater than 65 lbs. (29.5 kg), use the vehicle's seat belt (not the lower anchors) to install the child restraint. Be sure to follow the child restraint manufacturer's instructions for installation.

Follow these steps to install a rear-facing child restraint using the LATCH system:

1. Position the child restraint on the seat. Always follow the child restraint manufacturer's instructions.

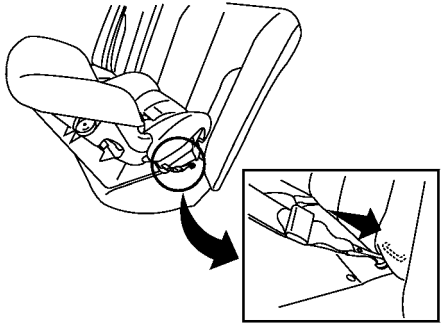

Rear-facing webbing-mounted — step 2

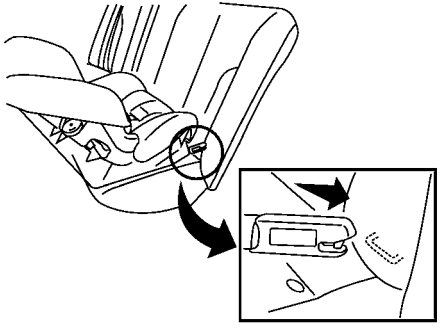

Rear-facing rigid-mounted — step 2

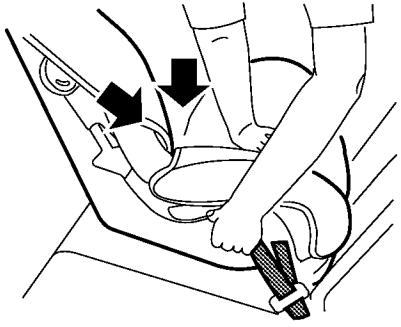

Rear-facing — step 3

2. Secure the child restraint anchor attachments to the LATCH lower anchors. Check to make sure that the LATCH attachment is properly attached to the lower anchors.

3. For child restraints that are equipped with webbing-mounted attachments, remove any additional slack from the anchor attachments. Press downward and rearward firmly in the center of the child restraint with your hand to compress the vehicle seat cushion and seatback while tightening the webbing of the anchor attachments.

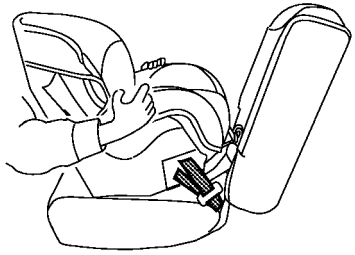

Rear-facing — step 4

4. After attaching the child restraint, test it before you place the child in it. Push it from side to side while holding the seat near the LATCH attachment path. The child restraint should not move more than 1 inch (25 mm), from side to side. Try to tug it forward and check to see if the LATCH attachment holds the restraint in place. If the restraint is not secure, tighten the LATCH attachment as necessary, or put the restraint in another seat and test it again. You may need to try a different child restraint or try installing by using the vehicle seat belt (if applicable). Not all child restraints fit in all types of vehicles.
5. Check to make sure that the child restraint is properly secured prior to each use. If the child restraint is loose, repeat steps 2 through 4.

REAR-FACING CHILD RESTRAINT INSTALLATION USING THE SEAT BELTS

WARNING

The three-point seat belt with Automatic Locking Retractor (ALR) must be used when installing a child restraint. Failure to use the ALR mode will result in the child restraint not being properly secured. The restraint could tip over or be loose and cause injury to a child in a sudden stop or collision. Also, it can change the operation of the front passenger air bag. For additional information, refer to "Front passenger air bag and status light" in this section.

For additional information, refer to all Warnings and Cautions in the "Child safety" and "Child restraints" sections of this manual before installing a child restraint.

Do not use the lower anchors if the combined weight of the child and child restraint exceeds 65 lbs. (29.5 kg). If the combined weight of the child and child restraint is greater than 65 lbs. (29.5 kg), use the vehicle's seat belt (not the lower anchors) to install the child restraint. Be sure to follow the child restraint manufacturer's instructions for installation.

Follow these steps to install a rear-facing child restraint using the vehicle seat belt in the rear seats:

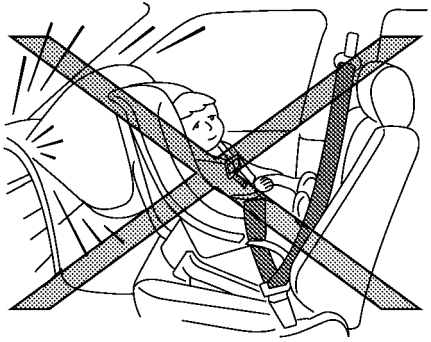

Rear-facing — step 1

1. **Child restraints for infants must be used in the rear-facing direction and therefore must not be used in the front seat.** Position the child restraint on the seat. Always follow the child restraint manufacturer's instructions.

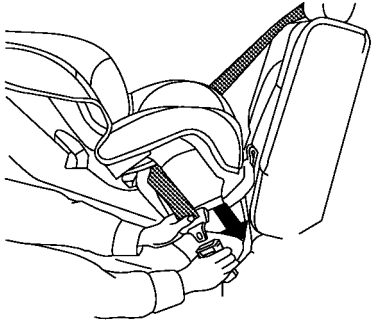

Rear-facing — step 2

2. Route the seat belt tongue through the child restraint and insert it into the buckle until you hear and feel the latch engage. Be sure to follow the child restraint manufacturer's instructions for belt routing.

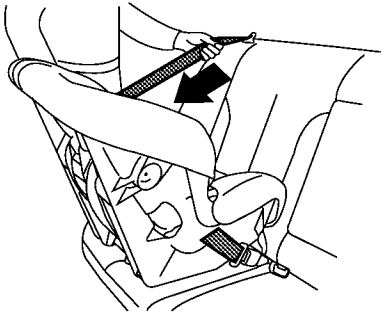

Rear-facing — step 3

3. Pull the shoulder belt until the belt is fully extended. At this time, the seat belt retractor is in the ALR mode (child restraint mode). It reverts to the ELR mode when the seat belt is fully retracted.

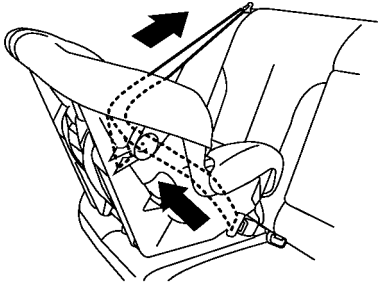

Rear-facing — step 4

4. Allow the seat belt to retract. Pull up on the shoulder belt to remove any slack in the belt.

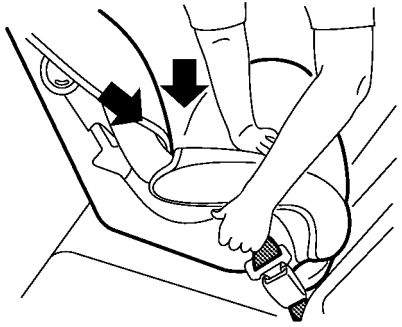

Rear-facing — step 5

5. Remove any additional slack from the child restraint. Press downward and rearward firmly in the center of the child restraint with your hand to compress the vehicle seat cushion and seatback while pulling up on the seat belt.

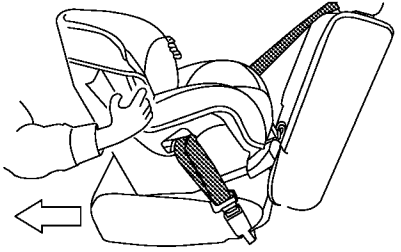

Rear-facing — step 6

6. After attaching the child restraint, test it before you place the child in it. Push it from side to side while holding the child restraint near the seat belt path. The child restraint should not move more than 1 inch (25 mm), from side to side. Try to tug it forward and check to see if the belt holds the restraint in place. If the restraint is not secure, tighten the seat belt as necessary, or put the restraint in another seat and test it again. You may need to try a different child restraint. Not

all child restraints fit in all types of vehicles.

7. Check to make sure that the child restraint is properly secured prior to each use. If the seat belt is not locked, repeat steps 1 through 6.

After the child restraint is removed and the seat belt fully retracted, the ALR mode (child restraint mode) is canceled.

FORWARD-FACING CHILD RESTRAINT INSTALLATION USING LATCH

For additional information, refer to all Warnings and Cautions in "Child safety" and "Child restraints" sections of this manual before installing a child restraint.

Do not use the lower anchors if the combined weight of the child and the child restraint exceeds 65 lbs. (29.5 kg). If the combined weight of the child and the child restraint is greater than 65 lbs. (29.5 kg), use the vehicle's seat belt (not the lower anchors) to install the child restraint. Be sure to follow the child restraint manufacturer's instructions for installation.

Follow these steps to install a forward-facing child restraint using the LATCH system:

1. Position the child restraint on the seat. Always follow the child restraint manufacturer's instructions.

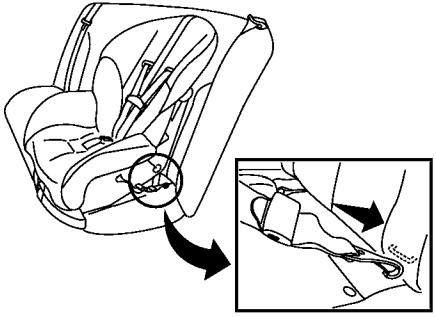

Forward-facing webbing-mounted — step 2

2. Secure the child restraint anchor attachments to the LATCH lower anchors. Check to make sure that the LATCH attachment is properly attached to the lower anchors.

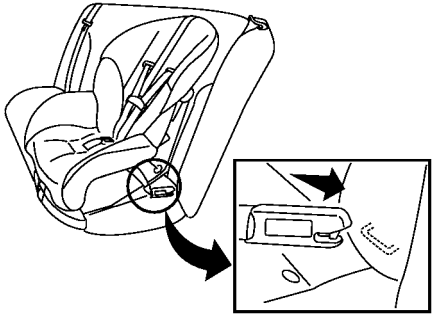

Forward-facing rigid-mounted — step 2

If the child restraint is equipped with a top tether strap, route the top tether strap and secure the tether strap to the tether anchor point. For additional information, refer to "Installing top tether strap" in this section.

Do not install child restraints that require the use of a top tether strap in seating positions that do not have a top tether anchor.

3. The back of the child restraint should be secured against the vehicle seatback.

   If necessary, remove the head restraint/headrest to obtain the correct child restraint fit. If the head restraint/headrest is removed, store it in a secure place. **Be sure to reinstall the head restraint/headrest when the child restraint is removed**. For additional information, refer to "Head restraints/headrests" in this section.

   If the seating position does not have an adjustable head restraint/headrest and it is interfering with the proper child restraint fit, try another seating position or a different child restraint.

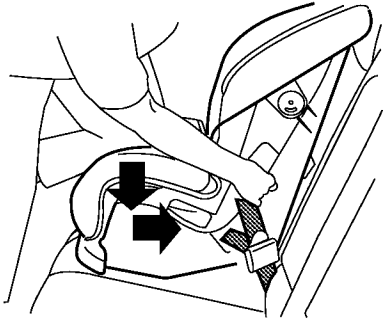

Forward-facing — step 4

4. For child restraints that are equipped with webbing-mounted attachments, remove any additional slack from the anchor attachments. Press downward and rearward firmly in the center of the child restraint with your knee to compress the vehicle seat cushion and seatback while tightening the webbing of the anchor attachments.
5. Tighten the tether strap according to the manufacturer's instructions to remove any slack.

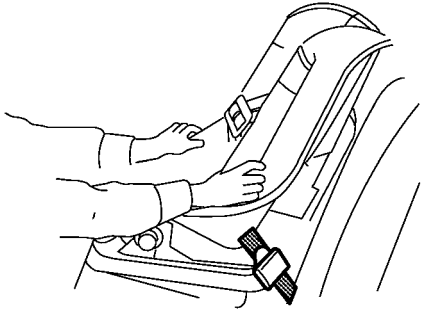

Forward-facing — step 6

6. After attaching the child restraint, test it before you place the child in it. Push it from side to side while holding the child restraint near the LATCH attachment path. The child restraint should not move more than 1 inch (25 mm), from side to side. Try to tug it forward and check to see if the LATCH attachment holds the restraint in place. If the restraint is not secure, tighten the LATCH attachment as necessary, or put the restraint in another seat and test it again. You may need to try a different child restraint. Not all child restraints fit in all types of vehicles.
7. Check to make sure the child restraint is properly secured prior to each use. If the child restraint is loose, repeat steps 1 through 6.

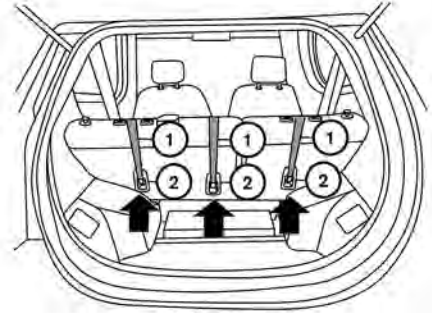

Installing top tether strap

① Top tether strap
② Tether anchor point

The child restraint top tether strap must be used when installing the child restraint with the LATCH lower anchor attachments.

First, secure the child restraint with the LATCH lower anchors (rear bench outboard seating positions only).

Rear bench seat

OUTBOARD SEATING POSITIONS

1. Remove the head restraint/headrest and store it in a secure place. Be sure to reinstall the head restraint/headrest when the child restraint is removed. For additional information, refer to "Head restraints/headrests" in this section.
2. Position the top tether strap ① over the seatback.
3. Secure the tether strap to the tether anchor point ② on the bottom of the seatback behind the child restraint.
4. Tighten the tether strap according to the manufacturer's instructions to remove any slack.

If you have any questions when installing a top tether strap, it is recommended that you visit a NISSAN certified LEAF dealer for details.

WARNING

Child restraint anchorages are designed to withstand only those loads imposed by correctly fitted child restraints. Under no circumstances are they to be used to attach adult seat belts, or other items or equipment to the vehicle. Doing so could damage the child restraint anchorages. The child restraint will not be properly installed using the damaged anchorage, and a child could be seriously injured or killed in a collision.

FORWARD-FACING CHILD RESTRAINT INSTALLATION USING THE SEAT BELTS

WARNING

The three-point seat belt with Automatic Locking Retractor (ALR) must be used when installing a child restraint. Failure to use the ALR mode will result in the child restraint not being properly secured. The restraint could tip over or be loose and cause injury to a child in a sudden stop or collision. Also, it can change the operation of the front passenger air bag. For additional information, refer to "Front passenger air bag and status light" in this section.

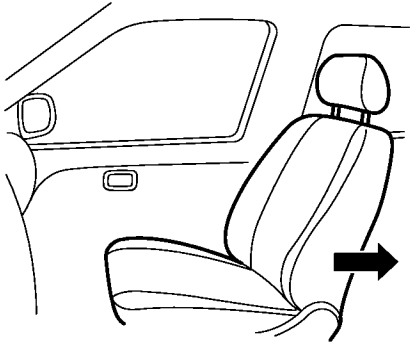

Forward-facing (front passenger seat) — step 1

For additional information, refer to all Warnings and Cautions in "Child safety" and "Child restraints" sections of this manual before installing a child restraint.

Do not use the lower anchors if the combined weight of the child and the child restraint exceeds 65 lbs. (29.5 kg). If the combined weight of the child and the child restraint is greater than 65 lbs. (29.5 kg), use the vehicle's seat belt (not the lower anchors) to install the child restraint. Be sure

to follow the child restraint manufacturer's instructions for installation.

Follow these steps to install a forward-facing child restraint using the vehicle seat belt in the rear seat or in the front passenger seat:

1. **If you must install a child restraint in the front seat, it should be placed in the forward-facing direction only. Move the seat to the rearmost position. Child restraints for infants must be used in the rear-facing direction and therefore must not be used in the front seat.**

2. Position the child restraint on the seat. Always follow the child restraint manufacturer's instructions.

   The back of the child restraint should be secured against the seatback.

   If necessary, adjust the head restraint/headrest to obtain the correct child restraint fit. If the head restraint/headrest is removed, store it in a secure place. **Be sure to reinstall the head restraint/headrest when the child restraint is removed.** For additional information, refer to "Head restraints/headrests" in this section.

   If the seating position does not have an adjustable head restraint/headrest and it is interfering with the proper child restraint fit, try another seating position or a different child restraint.

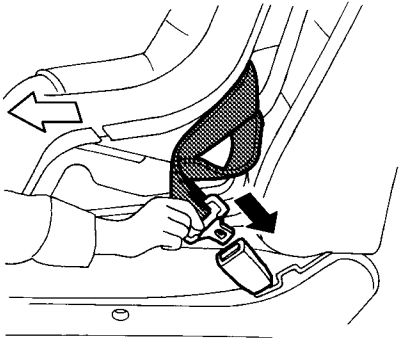

Forward-facing — step 3

3. Route the seat belt tongue through the child restraint and insert it into the buckle until you hear and feel the latch engage. Be sure to follow the child restraint manufacturer's instructions for belt routing.

   If the child restraint is equipped with a top tether strap, route the top tether strap and secure the tether strap to the

tether anchor point (rear seat installation only). For additional information, refer to "Installing top tether strap" in this section.

Do not install child restraints that require the use of a top tether strap in seating positions that do not have a top tether anchor.

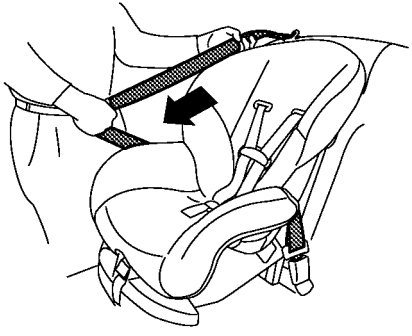

Forward-facing — step 4

4. Pull the shoulder belt until the belt is fully extended. At this time, the seat belt retractor is in the ALR mode (child restraint mode). It reverts to the ELR mode when the seat belt is fully retracted.

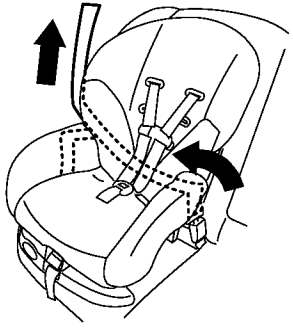

Forward-facing — step 5

5. Allow the seat belt to retract. Pull up on the shoulder belt to remove any slack in the belt.

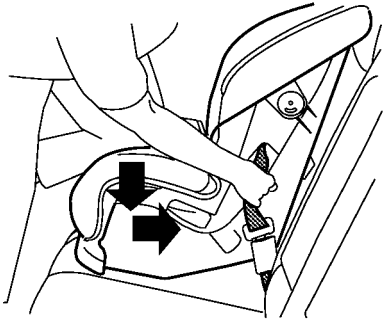

Forward-facing — step 6

Forward-facing — step 8

6. Remove any additional slack from the seat belt. Press downward and rearward firmly in the center of the child restraint with your knee to compress the vehicle seat cushion and seatback while pulling up on the seat belt.
7. Tighten the tether strap according to the manufacturer's instructions to remove any slack.
8. After attaching the child restraint, test it before you place the child in it. Push it from side to side while holding the child restraint near the seat belt path. The child restraint should not move more than 1 inch (25 mm), from side to side. Try to tug it forward and check to see if the belt holds the restraint in place. If the restraint is not secure, tighten the seat belt as necessary, or put the restraint in another seat and test it again. You may need to try a different child restraint. Not all child restraints fit in all types of vehicles.
9. Check to make sure the child restraint is properly secured prior to each use. If the seat belt is not locked, repeat steps 2 through 8.

10. If the child restraint is installed on the front passenger seat, push the power switch to the ON position. The front passenger air bag status light should illuminate. If this light does not illuminate, refer to "Front passenger air bag and status light" in this section. **Move the child restraint to another seating position**. Have the system checked. It is recommended that you visit a NISSAN certified LEAF dealer for this service.

After the child restraint is removed and the seat belt is fully retracted, the ALR mode (child restraint mode) is canceled.

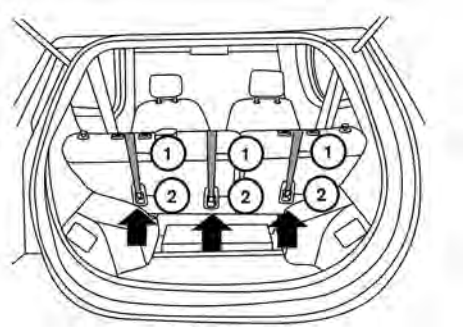

Installing top tether strap

① Top tether strap
② Tether anchor point

The child restraint top tether strap must be used when installing the child restraint with the seat belts.

First, secure the child restraint with the seat belt.

Rear bench seat

OUTBOARD SEATING POSITIONS

1. Remove the head restraint/headrest and store it in a secure place. Be sure to reinstall the head restraint/headrest when the child restraint is removed. For additional information, refer to "Head restraints/headrests" in this section.
2. Position the top tether strap ① over the seatback.
3. Secure the tether strap to the tether anchor point ② on the bottom of the seatback behind the child restraint.
4. Tighten the tether strap according to the manufacturer's instructions to remove any slack.

CENTER SEATING POSITION

1. Position the top tether strap ① over the seatback.
2. Secure the tether strap to the tether anchor point ② on the bottom of the seatback behind the child restraint.
3. Tighten the tether strap according to the manufacturer's instructions to remove any slack.

If you have any questions when installing a top tether strap, it is recommended that you visit a NISSAN certified LEAF dealer for this service.

WARNING

Child restraint anchorages are designed to withstand only those loads imposed by correctly fitted child restraints. Under no circumstances are they to be used to attach adult seat belts, or other items or equipment to the vehicle. Doing so could damage the child restraint anchorages. The child restraint will not be properly installed using the damaged anchorage, and a child could be seriously injured or killed in a collision.

BOOSTER SEATS

For additional information on installing a booster seat in your vehicle, follow the instructions outlined in this section.

Precautions on booster seats

WARNING

If a booster seat and seat belt are not used properly, the risk of a child being injured or killed in a sudden stop or collision greatly increases:

- **Make sure the shoulder portion of the belt is away from the child's face and neck and the lap portion of the belt does not cross the stomach.**
- **Make sure the shoulder belt is not behind the child or under the child's arm.**
- **A booster seat must only be installed in a seating position that has a lap/shoulder belt.**

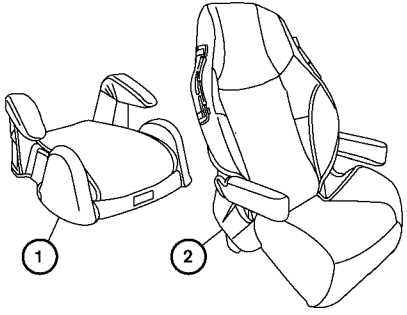

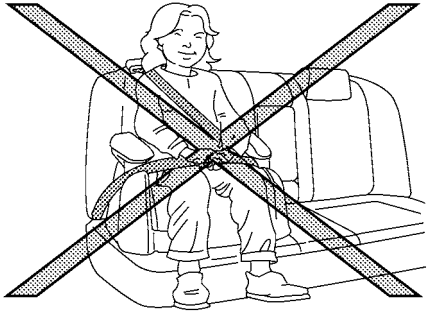

Booster seats of various sizes are offered by several manufacturers. When selecting any booster seat, keep the following points in mind:

- Choose only a booster seat with a label certifying that it complies with Federal Motor Vehicle Safety Standard 213 or Canadian Motor Vehicle Safety Standard 213.
- Check the booster seat in your vehicle to be sure it is compatible with the vehicle's seat and seat belt system.
- Make sure the child's head will be properly supported by the booster seat or vehicle seat. The seatback must be at or above the center of the child's ears. For example, if a low back booster seat ① is chosen, the vehicle seatback must be at or above the center of the child's ears. If the seatback is lower than the center of the child's ears, a high back booster seat ② should be used.
- If the booster seat is compatible with your vehicle, place your child in the booster seat and check the various adjustments to be sure the booster seat is compatible with your child. Always follow all recommended procedures.

All U.S. states and Canadian provinces or territories require that infants and small children be restrained in an approved child restraint at all times while the vehicle is being operated.

The instructions in this section apply to booster seat installation in the rear seats or the front passenger seat.

Booster seat installation

WARNING

To avoid injury to child, do not use the lap/shoulder belt Automatic Locking Retractor (ALR) mode when using a booster seat with the seat belts.

For additional information, refer to all Warnings and Cautions in "Child safety", "Child restraints" and "Booster seats" sections of this manual before installing a child restraint.

Follow these steps to install a booster seat on the rear seat or in the front passenger seat:

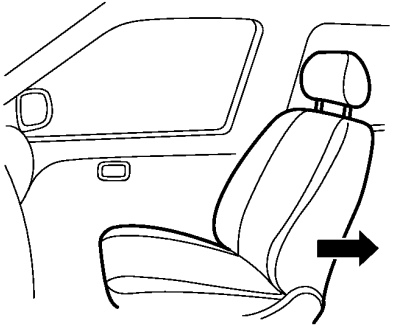

Front passenger seat

1. **If you must install a booster seat in the front seat, move the seat to the rearmost position.**
2. Position the booster seat on the seat. Only place it in the forward-facing direction. Always follow the booster seat manufacturer's instructions.
3. The booster seat should be positioned on the vehicle seat so that it is stable.

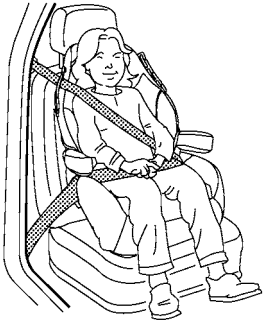

Front passenger seat

If necessary, adjust or remove the head restraint/headrest to obtain the correct booster seat fit. If the head restraint/headrest is removed, store it in a secure place. **Be sure to reinstall the head restraint/headrest when the booster seat is removed.** For additional information, refer to "Head restraints/headrests" in this section.

If the seating position does not have an adjustable head restraint/headrest and it is interfering with the proper booster seat fit, try another seating position or a different booster seat.

4. Position the lap portion of the seat belt low and snug on the child's hips. Be sure to follow the booster seat manufacturer's instructions for adjusting the seat belt routing.
5. Pull the shoulder belt portion of the seat belt toward the retractor to take up extra slack. Be sure the shoulder belt is positioned across the top, middle portion of the child's shoulder. Be sure to follow the booster seat manufacturer's instructions for adjusting the seat belt routing.
6. Follow the warnings, cautions and instructions for properly fastening a seat belt. For additional information, refer to "Three-point type seat belt with retractor" in this section.

7. If the booster seat is installed in the front passenger seat, push the power switch to the ON position. The front passenger air bag status light may or may not illuminate, depending on the size of the child and the type of booster seat used. For additional information, refer to "Front passenger air bag and status light" in this section.

SUPPLEMENTAL RESTRAINT SYSTEM (SRS)

PRECAUTIONS ON SRS

This SRS section contains important information concerning the following systems.

- Driver and front passenger supplemental front-impact air bag (NISSAN Advanced Air Bag System)
- Front seat-mounted side-impact supplemental air bag
- Roof-mounted curtain side-impact and rollover supplemental air bag
- Seat belt with pretensioner(s) (front seats)

Supplemental front-impact air bag system

The NISSAN Advanced Air Bag System can help cushion the impact force to the head and chest of the driver and front passenger in certain frontal collisions.

Front seat-mounted side-impact supplemental air bag system

This system can help cushion the impact force to the chest and pelvic area of the driver and front passenger in certain side impact collisions. The side air bags are designed to inflate on the side where the vehicle is impacted.

Roof-mounted curtain side-impact and rollover supplemental air bag system

This system can help cushion the impact force to the head of occupants in front and rear outboard seating positions in certain side impact collisions. In a side impact, the curtain air bags are designed to inflate on the side where the vehicle is impacted. In a rollover, the curtain air bags are designed to inflate and remain inflated for a short time.

The SRS is designed to **supplement** the crash protection provided by the driver and passenger seat belts and is **not a substitute** for them. Seat belts should always be correctly worn, and the occupant should be seated a suitable distance away from the steering wheel, instrument panel and door finishers. For additional information, refer to "Seat belts" in this section.

The supplemental air bags operate only when the power switch is in the ON position.

After the power switch is placed in the ON position, the supplemental air bag warning light illuminates. The supplemental air bag warning light will turn off after about 7 seconds if the system is operational.

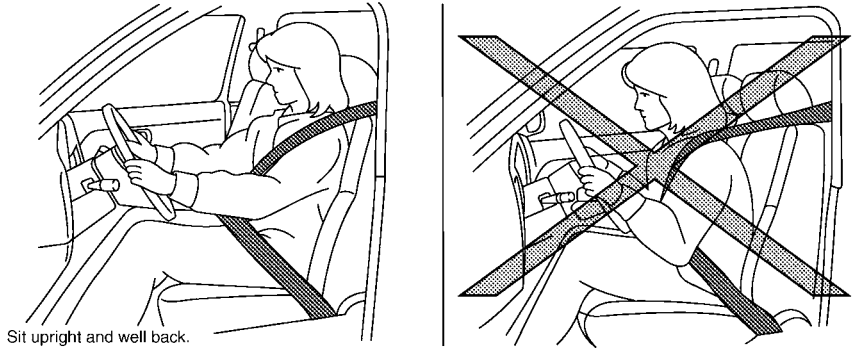

Sit upright and well back.

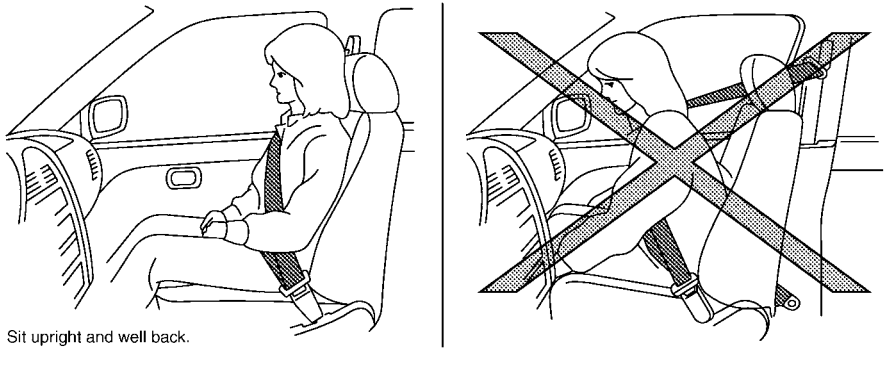

Sit upright and well back.

WARNING

- **The front air bags ordinarily will not inflate in the event of a side impact, rear impact, rollover or lower severity frontal collision. Always wear your seat belts to help reduce the risk or severity of injury in various kinds of accidents.**
- **The front passenger air bag will not inflate if the passenger air bag status light is lit. For additional information, refer to "Front passenger air bag and status light" in this section.**
- **The seat belts and the front air bags are most effective when you are sitting well back and upright in the seat with both feet on the floor. The front air bags inflate with great force. Even with the NISSAN Advanced Air Bag System, if you are unrestrained, leaning forward, sitting sideways or out of position in any way, you are at greater risk of injury or death in a crash. You may also receive serious or fatal injuries from the front air bag if you are up against it when it inflates. Always sit back against the seatback and as far away as practical from the steering wheel or instrument panel. Always properly use the seat belts.**
- **The driver and front passenger seat belt buckles are equipped with sensors that detect if the seat belts are fastened. The NISSAN Advanced Air Bag System monitors the severity of a collision and seat belt usage then inflates the air bags as needed. Failure to properly wear seat belts can increase the risk or severity of injury in an accident.**
- **The front passenger seat is equipped with occupant classification sensor (weight sensor) that turns the front passenger air bag OFF under some conditions. This sensor is only used in this seat. Failure to be properly seated and wearing the seat belt can increase the risk or severity of injury in an accident. For additional information, refer to "Front passenger air bag and status light" in this section.**
- **Keep hands on the outside of the steering wheel. Placing them inside the steering wheel rim could increase the risk that they are injured if the front air bag inflates.**

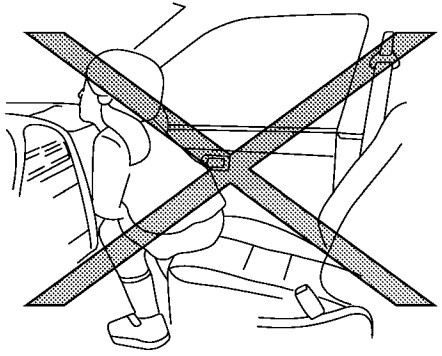

WARNING

- **Never let children ride unrestrained or extend their hands or face out of the window. Do not attempt to hold them in your lap or arms. Some examples of dangerous riding positions are shown in the illustrations.**

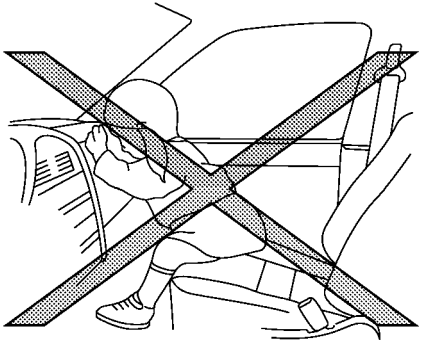

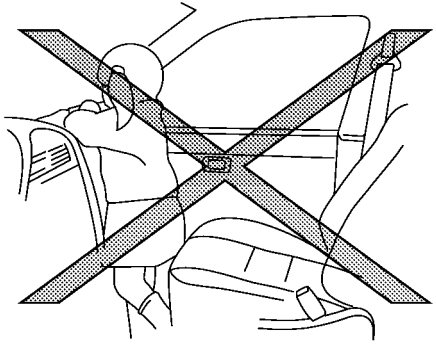

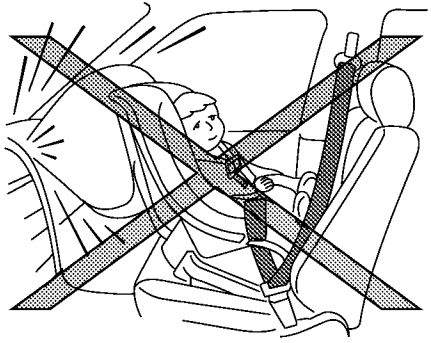

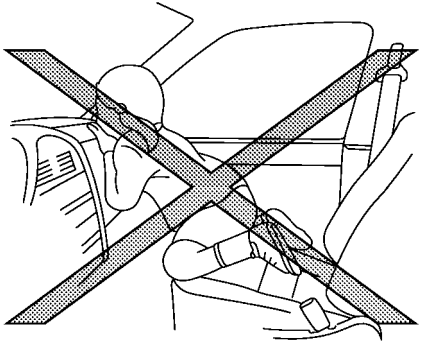

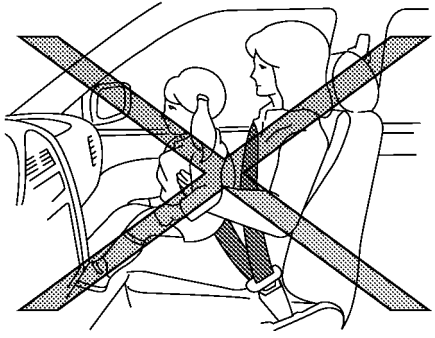

- **Children may be severely injured or killed when the front air bags, side air bags or curtain air bags inflate if they are not properly restrained. Pre-teens and children should be properly restrained in the rear seat, if possible.**
- **Even with the NISSAN Advanced Air Bag System, never install a rear-facing child restraint on the front seat. An inflating front air bag could seriously injure or kill your child. For additional information, refer to "Child restraints" in this section.**

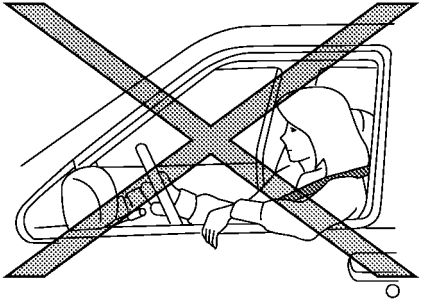

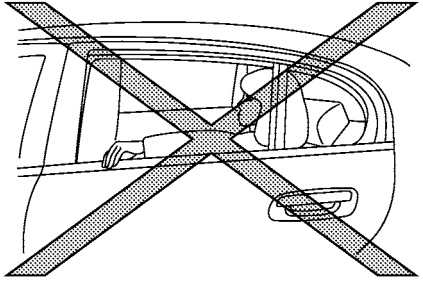

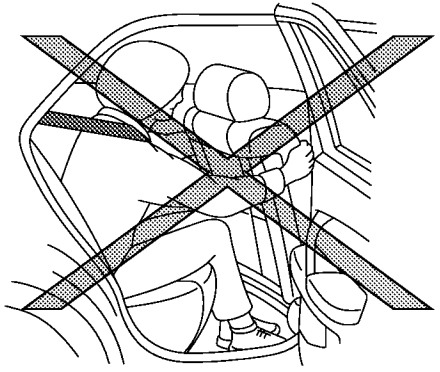

Do not lean against doors or windows.

WARNING

Front seat-mounted side-impact supplemental air bags and roof-mounted curtain side-impact and roll-over supplemental air bags:

- **The side air bags and curtain air bags ordinarily will not inflate in the event of a frontal impact, rear impact, or lower severity side collision. Always wear your seat belts to help reduce the risk or severity of injury in various kinds of accidents.**
- **The seat belts, the side air bags and curtain air bags are most effective when you are sitting well back and upright in the seat. The side air bag and curtain air bag inflate with great force. Do not allow anyone to place their hand, leg or face near the side**

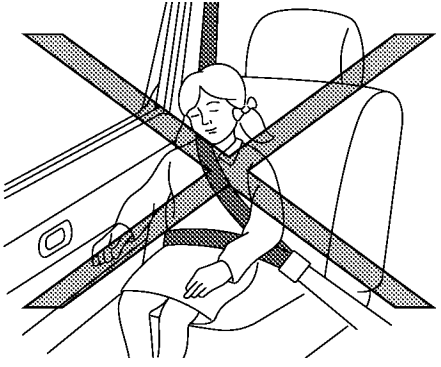

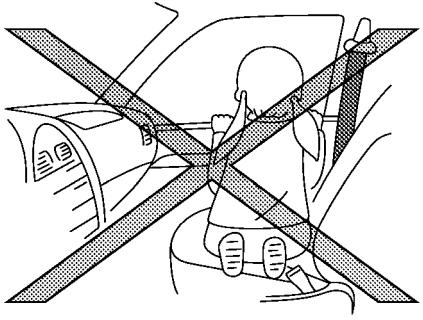

- **When sitting in the rear seat, do not hold onto the seatback of the front seat. If the side air bag inflates, you may be seriously injured. Be especially careful with children, who should always be properly restrained. Some examples of dangerous riding positions are shown in the illustrations.**
- **Do not use seat covers on the front seatbacks. They may interfere with side air bag inflation.**

air bag on the side of the seatback of the front seat or near the side roof rails. Do not allow anyone sitting in the front seats or rear outboard seats to extend their hand out of the window or lean against the door. Some examples of dangerous riding positions are shown in the previous illustrations.

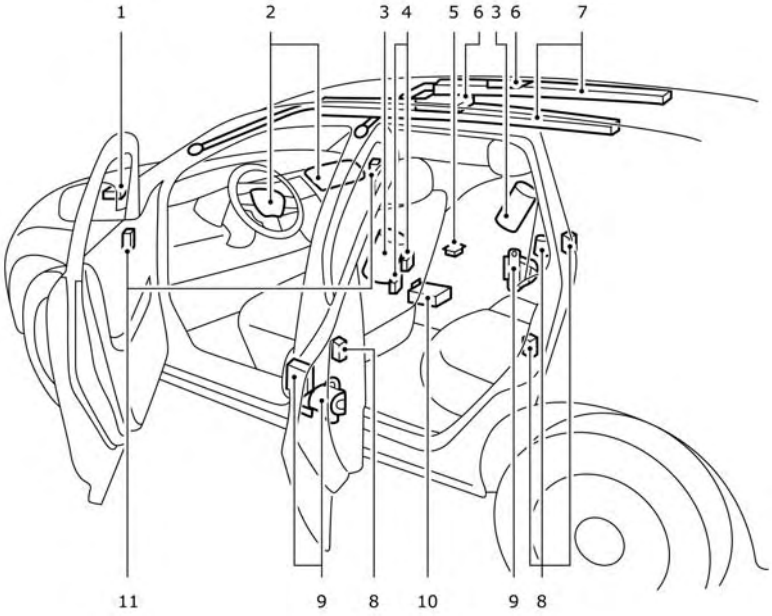

1. Crash zone sensor
2. Supplemental front-impact air bag modules
3. Front seat-mounted side-impact supplemental air bag modules
4. Occupant classification sensor (weight sensor)
5. Occupant classification system control unit
6. Roof-mounted curtain side-impact and rollover supplemental air bag inflators
7. Roof-mounted curtain side-impact and rollover supplemental air bag modules
8. Satellite sensors
9. Seat belt with pretensioner(s) (front seats)
10. Air bag Control Unit (ACU)
11. Door sensors

NISSAN Advanced Air Bag System (front seats)

WARNING

To ensure proper operation of the front passenger's NISSAN Advanced Air Bag System, please observe the following items.

- **Do not allow a passenger in the rear seat to push or pull on the seatback pocket.**
- **Do not place heavy loads heavier than 9.1 lbs. (4 kg) on the seatback, head restraint/headrest or in the seatback pocket.**
- **Make sure that there is nothing pressing against the rear of the seatback, such as a child restraint installed in the rear seat or an object stored on the floor.**
- **Make sure that there is no object placed under the front passenger seat.**
- **Make sure that there is no object placed between the seat cushion and center console or between the seat cushion and the door.**
- **If a forward-facing child restraint is installed in the front passenger seat, do not position the front passenger seat so the child restraint contacts the instrument panel. If the child restraint does contact the instrument panel, the system may determine the seat is occupied and the passenger air bag may deploy in a collision. Also the front passenger air bag status light may not illuminate. For additional information, refer to "Child restraints" in this section.**
- **Confirm the operating condition with the front passenger air bag status light.**
- **If you notice that the front passenger air bag status light is not operating as described in this section, get the occupant classification system checked. It is recommended that you visit a NISSAN certified LEAF dealer for this service.**
- **Until you have confirmed with a dealer that your passenger seat occupant classification system is working properly, position the occupants in the rear seating positions.**
- **Do not position the front passenger seat so it contacts the rear seat. If the front seat does contact the rear seat, the air bag system may determine a sensor malfunction has occurred and the front passenger air bag status light may illuminate and the supplemental air bag warning light may flash.**

This vehicle is equipped with the NISSAN Advanced Air Bag System for the driver and front passenger seats. This system is designed to meet certification requirements under U.S. regulations. It is also permitted in Canada. **All of the information, cautions and warnings in this manual apply and must be followed.**

The driver supplemental front-impact air bag is located in the center of the steering wheel. The front passenger supplemental front-impact air bag is mounted in the instrument panel above the glove box. The front air bags are designed to inflate in higher severity frontal collisions, although they may inflate if the forces in another type of collision are similar to those of a higher severity frontal impact. They may

not inflate in certain frontal collisions. Vehicle damage (or lack of it) is not always an indication of proper front air bag operation.

The NISSAN Advanced Air Bag System monitors information from the crash zone sensor and the Air bag Control Unit (ACU). Inflator operation is based on the severity of a collision and seat belt usage for the driver. For the front passenger, the occupant classification sensor is also monitored. Based on information from the sensor, only one front air bag may inflate in a crash, depending on the crash severity. Additionally, the front passenger air bag may be automatically turned OFF under some conditions, depending on the weight detected on the passenger seat and how the seat belt is used. If the front passenger air bag is OFF, the passenger air bag status light will be illuminated. For additional information, refer to "Front passenger air bag and status light" in this section. One front air bag inflating does not indicate improper performance of the system.

If you have any questions about your air bag system, it is recommended that you visit a NISSAN certified LEAF dealer to obtain information about the system. If you are considering modification of your vehicle due to a disability, you may also contact NISSAN. Contact information is contained in the front of this Owner's Manual.

When a front air bag inflates, a fairly loud noise may be heard, followed by release of smoke. This smoke is not harmful and does not indicate a fire. Care should be taken not to inhale it, as it may cause irritation and choking. Those with a history of a breathing condition should get fresh air promptly.

Front air bags, along with the use of seat belts, help to cushion the impact force on the head and chest of the front occupants. They can help save lives and reduce serious injuries. However, an inflating front air bag may cause facial abrasions or other injuries. Front air bags do not provide restraint to the lower body.

Even with NISSAN Advanced Air Bags, seat belts should be correctly worn and the driver and front passenger seated upright as far as practical away from the steering wheel or instrument panel. The front air bags inflate quickly in order to help protect the front occupants. Because of this, the force of the front air bag inflating can increase the risk of injury if the occupant is too close to, or is against, the air bag module during inflation.

The front air bags deflate quickly after a collision.

The front air bags operate only when the power switch is in the ON position.

After the power switch is placed in the ON position, the supplemental air bag warning light illuminates. The supplemental air bag warning light will turn off after about 7 seconds if the system is operational.

WARNING

The front passenger air bag is designed to automatically turn OFF under some conditions. Read this section carefully to learn how it operates. Proper use of the seat, seat belt and child restraints is necessary for most effective protection. Failure to follow all instructions in this manual concerning the use of seats, seat belts and child restraints can increase the risk or severity of injury in an accident.

Front passenger air bag and status light:

Status light:

The front passenger seat is equipped with an occupant classification sensor (weight sensor) that turns the front passenger air bag on or off depending on the weight applied to the front passenger seat. The status of the front passenger air bag (ON or OFF) is indicated by the front passenger air bag status light which is located on the instrument panel.

After the power switch is placed in the "ON" position, the front passenger air bag status light on the instrument panel illuminates for about 7 seconds and then turns off or remains illuminated depending on the front passenger seat occupied status. The light operates as follows:

CONDITION	DESCRIPTION	PASSENGER AIR BAG INDICATOR LIGHT ( ) RESULT	FRONT PASSENGER AIR BAG STATUS
Empty	Empty front passenger seat	ON (illuminated)	INHIBITED
Nobody/Somebody	Bag or Child or Child Restraint or Small Adult in front passenger seat	ON (illuminated)	INHIBITED
Adult	Adult in the front passenger seat	OFF (dark)	ACTIVATED

In addition to the above, certain objects placed on the front passenger seat may also cause the light to operate as described above depending on their weight.

For additional information, refer to "Normal operation" and "Troubleshooting" in this section.

Front passenger air bag:

The front passenger air bag is designed to automatically turn OFF when the vehicle is operated under some conditions as described below in accordance with U.S. regulations. If the front passenger air bag is OFF, it will not inflate in a crash. The driver air bag and other air bags in your vehicle are not part of this system.

The purpose of the regulation is to help reduce the risk of injury or death from an inflating air bag to certain front passenger seat occupants, such as children, by requiring the air bag to be automatically turned OFF. Certain sensors are used to meet the requirements.

The occupant classification sensor in this vehicle is a weight sensor. It is designed to detect an occupant and objects on the seat by weight. For example, if a child is in the front passenger seat, the NISSAN Advanced Air Bag System is designed to turn the front passenger air bag OFF in accordance with the regulations. Also, if a child restraint of the type specified in the regulations is on the seat, its weight and the child's weight can be detected and cause the air bag to turn OFF.

Front passenger seat adult occupants who are properly seated and using the seat belt as outlined in this manual should not cause the front passenger air bag to be automatically turned OFF. For small adults it may be turned OFF, however if the occupant takes his/her weight off the seat cushion (for example, by not sitting upright, by sitting on an edge of the seat, or by otherwise being out of position), this could cause the sensors to turn the air bag OFF. Always be sure to be seated and wearing the seat belt properly for the most effective protection by the seat belt and supplemental air bag.

NISSAN recommends that pre-teens and children be properly restrained in a rear seat. NISSAN also recommends that appropriate child restraints and booster seats be properly installed in a rear seat. If this is not possible, the occupant classification sensor is designed to operate as described above to turn the front passenger air bag OFF for specified child restraints as required by regulations. Failing to properly secure child restraints and to use the ALR mode may allow the restraint to tip or move in a collision or sudden stop. This can also result in the front passenger air bag inflating in a crash instead of being OFF. For additional information, refer to "Child restraints" in this section.

If the front passenger seat is not occupied, the front passenger air bag is designed not to inflate in a crash. However, heavy objects placed on the seat could result in air bag inflation, because of the object's weight being detected by the occupant classification sensor. Other conditions could also result in air bag inflation, such as if a child is standing on the seat, or if two children are on the seat, contrary to the instructions in this manual. Always be sure that you and all vehicle occupants are seated and restrained properly.

Using the front passenger air bag status light, you can monitor when the front passenger air bag is automatically turned OFF.

If an adult occupant is in the seat but the front passenger air bag status light is illuminated (indicating that the air bag is OFF), it could be that the person is a small adult, or is not sitting on the seat properly or not using the seat belt properly.

If a child restraint must be used in the front seat, the front passenger air bag status light may or may not be illuminated, depending on the size of the child and the type of child restraint being used. If the front passenger air bag status light is not illuminated (indicating that the air bag might inflate in a crash), it could be that the child restraint or seat belt is not being used properly. Make sure that the child restraint is installed properly, the seat belt is used properly and the occupant is positioned properly. If the front passenger air bag status light is still not illuminated, reposition the occupant or child restraint in a rear seat.

If the front passenger air bag status light will not illuminate even though you believe that the child restraint, the seat belts and the occupant are properly positioned, it is recommended that you take your vehicle to a NISSAN certified LEAF dealer. A NISSAN certified LEAF dealer can check system status by using a special tool. However, until you have confirmed with a dealer that your air bag is working properly, reposition the occupant or child restraint in a rear seat.

The NISSAN Advanced Air Bag System and front passenger air bag status light will take a few seconds to register a change in the front passenger seat status. This is normal system operation and does not indicate a malfunction.

If a malfunction occurs in the front passenger air bag system, the supplemental air bag warning light , located in the meter and gauges area of the instrument panel, will be illuminated (blinking or steadily lit). Have the system checked. It is recommended that you visit a NISSAN certified LEAF dealer for this service.

Normal operation:

In order for the occupant classification sensor system to classify the front passenger based on weight, please follow the precautions and steps outlined below:

Precautions:

- Make sure that there are no objects weighing over 9.1 lbs. (4 kg) hanging on the seat or placed in the seatback pocket.
- Make sure that a child restraint or other object is not pressing against the rear of the seatback.
- Make sure that the rear passenger is not pushing or pulling on the back of the front passenger seat.
- Make sure that the front passenger seat or seatback is not forced back against an object on the seat or floor behind it.
- Make sure that there is no object placed under the front passenger seat.

Steps:

1. Adjust the seat as outlined in the "Seats" section of this manual. Sit upright, leaning against the seatback, and centered on the seat cushion with your feet comfortably extended to the floor.

2. Make sure there are no objects on your lap.
3. Fasten the seat belt as outlined in the "Seat belts" section of this manual. Front passenger seat belt buckle status is monitored by the occupant classification system, and is used as an input to determine occupancy status. So, it is highly recommended that the front passenger fasten their seat belt.
4. Remain in this position for 30 seconds allowing the system to classify the front passenger before the vehicle is put into motion.
5. Ensure proper classification by checking the front passenger air bag status light.

NOTE:
This vehicle's occupant classification sensor system generally keeps the classification locked during driving, so it is important that you confirm that the front passenger is properly classified prior to driving. However, the occupant classification sensor may recalculate the weight of the occupant under some conditions (both while driving and when stopped), so front passenger seat occupants should continue to remain seated as outlined above.

Troubleshooting:

If you think the front passenger air bag status light is incorrect:

1. If the light is ON with an adult occupying the front passenger seat:
   - Occupant is a small adult — the air bag light is functioning as intended. The front passenger air bag is suppressed.

   However, if the occupant is not a small adult, then this may be due to the following conditions that may be interfering with the weight sensors:
   - Occupant is not sitting upright, leaning against the seatback, and centered on the seat cushion with his/her feet comfortably extended to the floor.
   - A child restraint or other object pressing against the rear of the seatback.
   - A rear passenger pushing or pulling on the back of the front passenger seat.
   - Forcing the front seat or seatback against an object on the seat or floor behind it.
   - An object placed under the front passenger seat.
   - An object placed between the seat cushion and center console or between the seat cushion and the door.

   If the vehicle is moving, please come to a stop when it is safe to do so. Check and correct any of the above conditions. Restart the vehicle and wait 1 minute.

   NOTE:
   A system check will be performed during which the front passenger air bag status light will remain lit for about 7 seconds initially.

   If the light is still ON after this, the person should be advised not to ride in the front passenger seat and the vehicle should be checked as soon as possible. It is recommended that you visit a NISSAN certified LEAF dealer for this service.
2. If the light is OFF with a small adult, child or child restraint occupying the front passenger seat.

   This may be due to the following conditions that may be interfering with the weight sensors:

- Small adult or child is not sitting upright, leaning against the seatback, and centered on the seat cushion with his/her feet comfortably extended to the floor.
- The child restraint is not properly installed, as outlined in the "Child restraints" section of this manual.
- An object weighting over 9.1 lbs. (4 kg) hanging on the seat or placed in the seatback pocket.
- A child restraint or other object pressing against the rear or the seatback.
- A rear passenger pushing or pulling on the back of the front passenger seat. pushing or pulling on the seatback of the front passenger seat.
- Forcing the front seat or seatback against an object on the seat or floor behind it.
- An object placed under the front passenger seat.
- An object placed between the seat cushion and center console.

If the vehicle is moving, please come to a stop when it is safe to do so. Check and correct any of the above conditions. Restart the vehicle and wait 1 minute.

NOTE:
A system check will be performed during which the front passenger air bag status light will remain lit for about 7 seconds initially.

If the light is still OFF after this, the small adult, child or child restraint should be repositioned in the rear seat and the vehicle should be checked as soon as possible. It is recommended that you visit a NISSAN certified LEAF dealer for this service.

3. If the light is OFF with no front passenger and no objects on the front passenger seat the vehicle should be checked as soon as possible. It is recommended that you visit a NISSAN certified LEAF dealer for this service.

Other supplemental front-impact air bag precautions:

WARNING

- **Do not place any objects on the steering wheel pad or on the instrument panel. Also, do not place any objects between any occupant and the steering wheel or instrument panel. Such objects may become dangerous projectiles and cause injury if the front air bags inflate.**
- **Do not place objects with sharp edges on the seat. Also, do not place heavy objects on the seat that will leave permanent impressions in the seat. Such objects can damage the seat or occupant classification sensor (weight sensor). This can affect the operation of the air bag system and result in serious personal injury.**
- **Do not use water or acidic cleaners (hot steam cleaners) on the seat. This can damage the seat or occupant classification sensor. This can also affect the operation of the air bag system and result in serious personal injury.**

- **Immediately after inflation, several front air bag system components will be hot. Do not touch them; you may severely burn yourself.**
- **No unauthorized changes should be made to any components or wiring of the supplemental air bag system. This is to prevent accidental inflation of the supplemental air bag or damage to the supplemental air bag system.**
- **Do not make unauthorized changes to your vehicle's electrical system, suspension system or front end structure. This could affect proper operation of the front air bag system.**
- **Tampering with the front air bag system may result in serious personal injury. Tampering includes changes to the steering wheel and the instrument panel assembly by placing material over the steering wheel pad and above the instrument panel or by installing additional trim material around the air bag system.**
- **Removing or modifying the front passenger seat may affect the function of the air bag system and result in serious personal injury.**
- **Modifying or tampering with the front passenger seat may result in serious personal injury. For example, do not change the front seats by placing material on the seat cushion or by installing additional trim material, such as seat covers, on the seat that is not specifically designed to assure proper air bag operation. Additionally, do not stow any objects under the front passenger seat or the seat cushion and seatback. Such objects may interfere with the proper operation of the occupant classification sensor (weight sensor).**
- **No unauthorized changes should be made to any components or wiring of the seat belt system. This may affect the front air bag system. Tampering with the seat belt system may result in serious personal injury.**
- **It is recommended that you visit a NISSAN certified LEAF dealer for work on and around the front air bag system. It is also recommended that you visit a NISSAN certified LEAF dealer for installation of electrical equipment. The Supplemental Restraint System (SRS) wiring harnesses* should not be modified or disconnected. Unauthorized electrical test equipment and probing devices should not be used on the air bag system.**
- **A cracked windshield should be replaced immediately by a qualified repair facility. A cracked windshield could affect the function of the supplemental air bag system.**

***The SRS wiring harness connectors are yellow and orange for easy identification.**

When selling your vehicle, we request that you inform the buyer about the front air bag system and guide the buyer to the appropriate sections in this Owner's Manual.

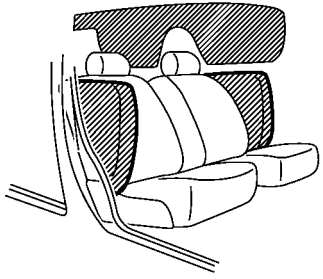

Front seat-mounted side-impact supplemental air bag and roof-mounted curtain side-impact and rollover supplemental air bag systems

The side air bags are located in the outside of the seatback of the front seats. The curtain air bags are located in the side roof rails. **All of the information, cautions, and warnings in this manual apply and must be followed.** The side air bags and curtain air bags are designed to inflate in higher severity side collisions, although they may inflate if the forces in another type of collision are similar to those of a higher severity side impact. They are designed to inflate on the side where the vehicle is impacted. They may not inflate in certain side collisions on the side where the vehicle is impacted.

If so equipped, the curtain air bags are also designed to inflate in certain types of rollover collisions or near rollovers. As a result, certain vehicle movements (for example, during severe off-roading) may cause the curtain air bags to inflate.

Vehicle damage (or lack of it) is not always an indication of proper side air bag and curtain air bag operation.

When the side air bags and curtain air bags inflate, a fairly loud noise may be heard, followed by release of smoke. This smoke is not harmful and does not indicate a fire. Care should be taken not to inhale it, as it may cause irritation and choking. Those with a history of a breathing condition should get fresh air promptly.

Side air bags, along with the use of seat belts, help to cushion the impact force on the chest and pelvic area of the front occupants. Curtain air bags help to cushion the impact force to the head of occupants in the front and rear outboard seating positions. They can help save lives and reduce serious injuries. However, side air bags and curtain air bags may cause abrasions or other injuries. Side air bags and curtain air bags do not provide restraint to the lower body.

The seat belts should be correctly worn and the driver and passenger seated upright as far as practical away from the side air bags. Rear seat passengers should be seated as far away as practical from the door finishers and side roof rails. The side air bags and curtain air bags inflate quickly in order to help protect the occupants in the outboard seating positions. Because of this, the force of the side air bags and curtain air bags inflating can increase the risk of injury if the occupant is too close to, or is against, these air bag modules during inflation. The side air bags and curtain air bags will deflate quickly after the collision is over.

The side air bags and curtain air bags operate only when the power switch is in the ON position.

After turning the power switch to the ON position, the supplemental air bag warning light illuminates. The supplemental air bag warning light will turn off after about 7 seconds if the systems are operational.

WARNING

- **Do not place any objects near the seatback of the front seats. Also, do not place any objects (an umbrella, bag, etc.) between the front door finisher and the front seat. Such objects may become dangerous projectiles and cause injury if a side air bag inflates.**
- **Right after inflation, several side air bag and curtain air bag system components will be hot. Do not touch them; you may severely burn yourself.**
- **No unauthorized changes should be made to any components or wiring of the side air bag and curtain air bag systems. This is to prevent damage to or accidental inflation of the side air bag and curtain air bag systems.**
- **Do not make unauthorized changes to your vehicle's electrical system, suspension system or side panel. This could affect proper operation of the side air bag and curtain air bag systems.**
- **Tampering with the side air bag system may result in serious personal injury. For example, do not change the front seats by placing material near the seatbacks or by installing additional trim material, such as seat covers, around the side air bag.**
- **It is recommended that you visit a NISSAN certified LEAF dealer for work around and on the side air bag and curtain air bag systems. It is also recommended that you visit a NISSAN certified LEAF dealer for installation of electrical equipment. The Supplemental Restraint System (SRS) wiring harnesses* should not be modified or disconnected. Unauthorized electrical test equipment and probing devices should not be used on the side air bag and curtain supplemental air bag systems.**

***The SRS wiring harness connectors are yellow and orange for easy identification.**

When selling your vehicle, we request that you inform the buyer about the side air bag and curtain air bag systems and guide the buyer to the appropriate sections in this Owner's Manual.

Seat belt with pretensioner(s) (front seats)

WARNING

- **The pretensioner(s) cannot be reused after activation. They must be replaced together with the retractor and buckle as a unit.**
- **If the vehicle becomes involved in a collision but pretensioner(s) are not activated, be sure to have the pretensioner system checked and, if necessary, replaced. It is recommended that you visit a NISSAN certified LEAF dealer for this service.**

- **No unauthorized changes should be made to any components or wiring of the pretensioner system. This is to prevent damage to or accidental activation of the pretensioner(s). Tampering with the pretensioner system may result in serious personal injury.**
- **It is recommended that you visit a NISSAN certified LEAF dealer for work around and on the pretensioner system. It is also recommended that you visit a NISSAN certified LEAF dealer for installation of electrical equipment. Unauthorized electrical test equipment and probing devices should not be used on the pretensioner system.**
- **If you need to dispose of the pretensioner(s) or scrap the vehicle, it is recommended that you visit a NISSAN certified LEAF dealer for this service. Incorrect disposal procedures could cause personal injury.**

The pretensioner system may activate with the supplemental air bag system in certain types of collisions. Working with the seat belt retractor, the pretensioner(s) help tighten the seat belt when the vehicle becomes involved in certain types of collisions, helping to restrain front seat occupants.

The pretensioner(s) are encased with the seat belt retractor and to the seat belt anchor affixed to the floor of the vehicle. These seat belts are used the same way as conventional seat belts.

When pretensioner(s) activate, smoke is released and a loud noise may be heard. This smoke is not harmful and does not indicate a fire. Care should be taken not to inhale it, as it may cause irritation and choking. Those with a history of a breathing condition should get fresh air promptly.

After the pretensioner(s') activation, load limiters allow the seat belt to release webbing (if necessary) to reduce forces against the chest.

The supplemental air bag warning light is used to indicate malfunctions in the pretensioner system. For additional information, refer to "Supplemental air bag warning light" in this section. If the operation of the supplemental air bag warning light indicates there is a malfunction, have the system checked. It is recommended that you visit a NISSAN certified LEAF dealer for this service.

When selling your vehicle, we request that you inform the buyer about the pretensioner system and guide the buyer to the appropriate sections in this Owner's Manual.

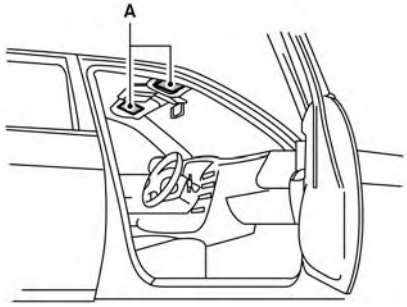

SUPPLEMENTAL AIR BAG WARNING LABELS

A. Supplemental front-impact air bag system warning labels

The warning labels are located on the surface of the sun visors.

SUPPLEMENTAL AIR BAG WARNING LIGHT

The supplemental air bag warning light, displaying in the instrument panel, monitors the circuits of the Air bag Control Unit (ACU), satellite sensors, crash zone sensor, occupant classification sensor, the supplemental front-impact air bag, front seat-mounted side-impact supplemental air bag, roof-mounted curtain side-impact supplemental air bag and seat belt pretensioner systems. The monitored circuits include air bag systems, pretensioner(s) and all related wiring.

When the power switch is in the ON position, the supplemental air bag warning light illuminates for about 7 seconds and then turns off. This means the system is operational.

If any of the following conditions occur, the front air bag, side air bag, curtain air bag and pretensioner systems need servicing:

- The supplemental air bag warning light remains on after approximately 7 seconds.
- The supplemental air bag warning light flashes intermittently.
- The supplemental air bag warning light does not come on at all.

Under these conditions, the front air bag, side air bag, curtain air bag and pretensioner systems may not operate properly. They must be checked and repaired. It is recommended that you visit the nearest NISSAN certified LEAF dealer for this service.

WARNING

If the supplemental air bag warning light is on, it could mean that the front air bag, side air bag, curtain air bag and/or pretensioner systems will not operate in an accident. To help avoid injury to yourself or others, have your vehicle checked as soon as possible. It is recommended that you visit a NISSAN certified LEAF dealer for this service.

Repair and replacement procedure

The front air bags, side air bags, curtain air bags and pretensioner(s) are designed to activate on a one-time-only basis. As a reminder, unless it is damaged, the supplemental air bag warning light will remain illuminated after inflation has occurred. These systems should be repaired and/or replaced as soon as possible. It is recommended that you visit a NISSAN certified LEAF dealer for this service.

When maintenance work is required on the vehicle, the front air bags, side air bags, curtain air bags and pretensioner(s) and related parts should be pointed out to the person performing the maintenance. The power switch should always be in the LOCK position when working under the hood or inside the vehicle.

WARNING

- **Once a front air bag, side air bag or curtain air bag has inflated, the air bag module will not function again and must be replaced. Additionally, the activated pretensioner(s) must also be replaced. The air bag module and pretensioner(s) should be replaced. It is recommended that you visit a NISSAN certified LEAF dealer for this service. The air bag modules and pretensioner system cannot be repaired.**
- **The front air bag, side air bag and curtain air bag systems, and pretensioner system should be inspected if there is any damage to the front end or side portion of the vehicle. It is recommended that you visit a NISSAN certified LEAF dealer for this service.**
- **If you need to dispose of a supplemental air bag or pretensioner system or scrap the vehicle, it is recommended that you visit a NISSAN certified LEAF dealer for this service. Correct supplemental air bag and pretensioner system disposal procedures are set forth in the appropriate NISSAN Service Manual. Incorrect disposal procedures could cause personal injury.**
- **If there is an impact to your vehicle from any direction, your Occupant Classification Sensor (OCS) should be checked. It is recommended that you visit a NISSAN certified LEAF dealer to verify it is still functioning correctly. The OCS should be checked even if no air bags deploy as a result of the impact. Failure to verify proper OCS function may result in an improper air bag deployment resulting in injury or death.**

2 Instruments and controls

Cockpit 2-3
Instrument panel 2-5
Meters and gauges 2-6
Speedometer and odometer 2-7
Li-ion battery temperature gauge 2-8
Power meter 2-9
Driving range 2-10
Li-ion battery available charge gauge 2-10
Outside air temperature 2-11
Clock 2-12
ECO mode indicator 2-12
e-Pedal system indicator 2-13
Warning lights, indicator lights and audible reminders 2-14
Checking lights 2-16
Warning lights 2-16
Indicator lights 2-23
Audible reminders 2-25
Vehicle information display 2-27
How to use the vehicle information display . . 2-27
Startup display 2-27
Settings 2-28
Vehicle information display warnings and indicators 2-36
Warning information displays (models with a Navigation System) 2-44
Security systems 2-46
Vehicle security system 2-46
NISSAN Vehicle Immobilizer System 2-47
Wiper and washer switch 2-49
Washer operation 2-50
Rear wiper operation 2-50
Rear window and outside mirror (if so equipped) defroster switch 2-51
Headlight and turn signal switch 2-52
Headlight switch 2-52
Instrument brightness control 2-57
Turn signal switch 2-57
Fog light switch (if so equipped) 2-58
Horn 2-58
ECO switch 2-58
Heated seat switches (if so equipped) 2-59
Heated steering wheel switch (if so equipped) . . 2-60
E-call (SOS) switch (if so equipped) 2-61
Charge port lid switch 2-61
Charge timer OFF switch 2-61
Steering Assist switch (if so equipped) 2-62
Power outlet 2-62

Storage 2-63
Seatback Pocket (if so equipped). 2-63
Storage tray 2-64
Glove box 2-64
Console box 2-64
Overhead sunglasses storage 2-65
Cup holders 2-65
Tonneau cover (if so equipped) 2-66
Stowing golf bags 2-68
Windows 2-68
Power windows 2-68
Interior lights 2-70
Console light (if so equipped) 2-71
Map lights 2-71
Room light 2-71
Cargo light 2-72
HomeLink® universal transceiver (if so equipped) 2-72
Programming HomeLink® 2-73
Programming HomeLink® for Canadian customers and gate openers 2-75
Operating the HomeLink® universal transceiver 2-75
Programming trouble-diagnosis 2-75
Clearing the programmed information. 2-76
Reprogramming a single HomeLink® button 2-76
If your vehicle is stolen. 2-76

COCKPIT

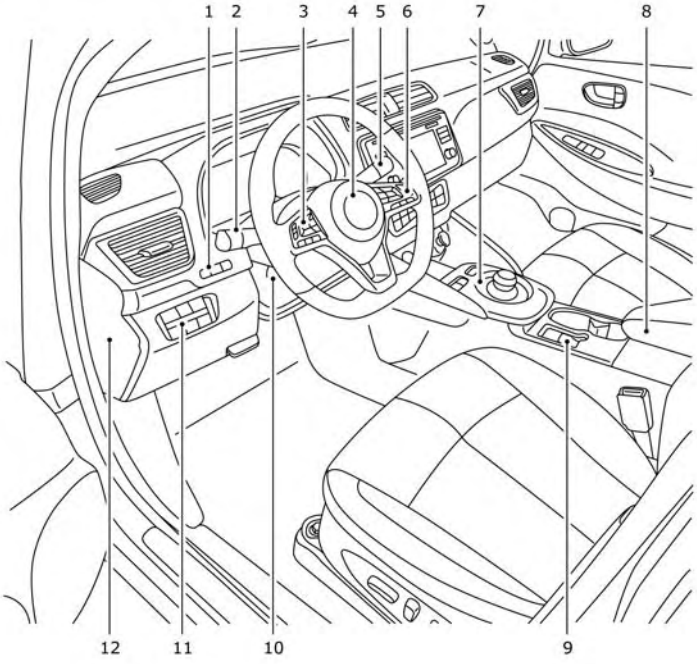

1. TRIP RESET switch for twin trip odometer (P. 2-6)
   — Instrument brightness control switch (P. 2-57)
2. Headlight, fog light (if so equipped) and turn signal switch
   — Headlight (P. 2-52)
   — Turn signal light (P. 2-52)
   — Fog light (if so equipped) (P. 2-52)
3. Steering-wheel-mounted controls (left side)
   — Audio control (P. 4-45)
   — Bluetooth® Hands-Free Phone System control (without navigation) (P. 4-45)
   — Bluetooth® Hands-Free Phone System control (with navigation) (Refer to NissanConnect® Manual (for Leaf))
4. Steering wheel
   — Power steering system (P. 5-133)
   — Horn (P. 2-58)
   — Driver's supplemental air bag (P. 1-43)
5. Wiper and washer switch (P. 2-49)
6. Steering-wheel-mounted controls (right side)
   — Cruise control switches (if so equipped) (P. 5-54)
   — Intelligent Cruise Control (ICC) switches (if so equipped) (P. 5-56)
   — ProPILOT ™ Assist switch (if so equipped) (P. 5-79)

7. Shift lever (P. 5-15)
— ECO switch (P. 2-58)
— e-Pedal switch (P. 5-22)
8. Console box (P. 2-63)
9. Parking brake (switch type) (if so equipped) (P. 5-19)
10. Tilting steering wheel lever (P. 3-21)
11. Charge port lid switch (P. 3-19)
— Charge timer OFF switch (P. 2-61)
— Heated steering wheel switch (if so equipped) (P. 2-60)
— Steering Assist switch (if so equipped) (P. 5-79)
12. Fuse box cover (P. 8-17)

INSTRUMENT PANEL

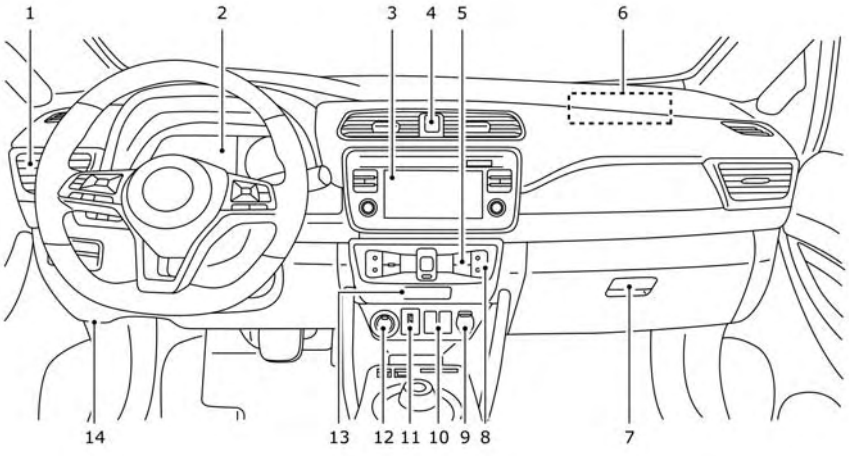

1. Vents (P. 4-29)
2. Meters and gauges (P. 2-6)
3. Center multi-function control panel
   — Navigation system (Refer to NissanConnect® Manual (for Leaf))
   — Without Navigation System (P. 4-45)
4. Hazard warning flasher switch (P. 6-2)
5. Rear window defroster switch (P. 2-51)
6. Front passenger supplemental air bag (P. 1-43)
7. Glove box (P. 2-63)
8. Heater and air conditioner control (P. 4-30)
9. Power outlet (P. 2-62)
10. Front heated seat switches (if so equipped) (P. 2-59)
11. Auxiliary input jack (P. 4-64)
    — iPod® connector/USB connector (P. 4-45)
12. Push-button power switch (P. 5-10)
13. Front passenger air bag status light (P. 1-43)
14. Hood release handle (P. 3-16)

METERS AND GAUGES

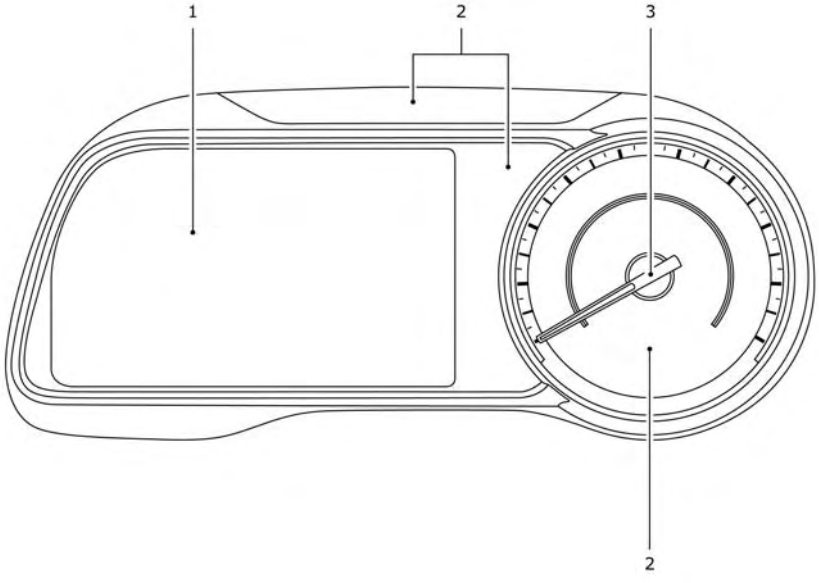

1. Vehicle information display (P. 2-27)
   — Clock (P. 2-12)
   — Outside air temperature (P. 2-11)
   — Li-ion battery available charge gauge (P. 2-10)
   — Driving range (P. EV-19)
   — Odometer/twin trip odometer (P. 2-7)
   — Indicator for timer (P. CH-35)
   — Power meter (P. 2-9)
2. Warning and indicator lights (P. 2-14)
   — Turn signal/Hazard indicator light (P. 2-52)
   — READY to drive indicator light (P. 2-25)
   — ECO mode indicator (P. 2-12
3. Speedometer (P. 2-6)

SPEEDOMETER AND ODOMETER

The vehicle is equipped with a speedometer and odometer. The speedometer is located on the right side of the vehicle information display. The odometer is located within the vehicle information display.

Speedometer

The speedometer indicates the vehicle speed.

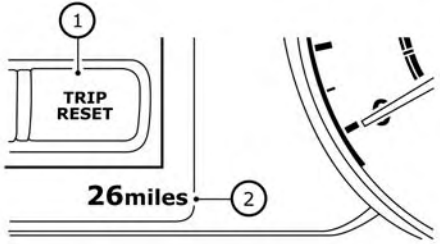

Odometer/twin trip odometer

The odometer and twin trip odometer ② are displayed on the vehicle information display when the power switch is in the ON or READY to drive position.

The odometer records the total distance the vehicle has been driven.

The twin trip odometer records the distance of individual trips.

Changing the display:

Pushing the TRIP RESET switch ① located on the left side of the combination meter panel changes the display as follows:

Odometer → TRIP A → TRIP B → Odometer

For additional information about the vehicle information display, refer to "Vehicle information display" in this section.

Resetting the trip odometer:

Pushing the TRIP RESET switch ① for approximately 1 second resets the currently displayed trip odometer to zero.

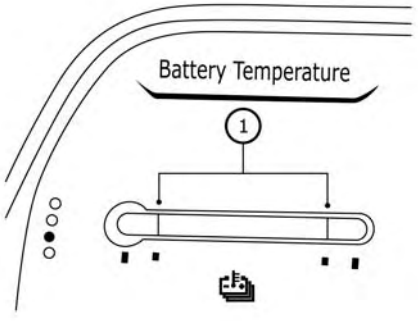

LI-ION BATTERY TEMPERATURE GAUGE

The gauge indicates the temperature of the Li-ion battery.

The temperature of the Li-ion battery is within the normal range when the display is within the zone ① shown in the illustration.

The temperature of the Li-ion battery varies according to the outside air temperature and driving conditions.

NOTE:

- **If the display indicates that the temperature of the Li-ion battery is near the red zone end of the normal range, reduce vehicle speed to decrease the temperature. If the indicator is over the normal range, the power provided to the traction motor is reduced when the power limitation indicator light is illuminated. Therefore, the vehicle is not as responsive when the accelerator is depressed while the power limitation light is illuminated. For additional information, refer to "Power limitation indicator light" in this section.**
- **If the outside temperature is extremely low, the Li-ion temperature gauge may not display a temperature reading. The vehicle may not be able to be put in the READY to drive mode. Have the system checked. It is recommended that you visit a NISSAN certified LEAF dealer for this service.**

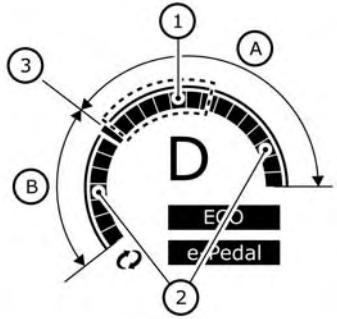

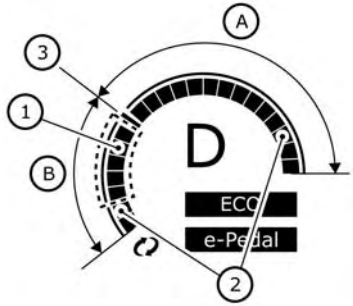

POWER METER

This meter displays the actual traction motor power consumption Ⓐ and the regenerative brake power provided to the Li-ion battery Ⓑ.

The power meter is in a neutral state ③.

The white illuminated portion ① in the display moves right or left depending on demand.

The white illuminated portion ① moves to the right when power is provided to the traction motor (Li-ion battery discharges).

The white illuminated portion ① moves to the left when power is generated and provided to the Li-ion battery by the regenerative brake system (Li-ion battery charging).

The power meter also indicates if the power provided to the motor is limited or if regenerative braking is limited. When power or regenerative braking is limited, the illuminated segments on the display are narrowed ②.

Regenerative braking is automatically reduced when the Li-ion battery is fully charged to prevent the Li-ion battery from becoming overcharged. Regenerative braking is also automatically reduced when the Li-ion battery temperature is high/low (indicated by the red/blue zones on the Li-ion battery temperature gauge) to prevent Li-ion battery damage.

The more regenerative braking is reduced, the more illuminated segments on the display are narrowed ②.

If the Li-ion battery charge is low, power provided to the traction motor is reduced. Motor output is also limited if the Li-ion battery temperature is high/low (indicated by the red/blue zones on the Li-ion battery temperature gauge) or the Li-ion battery charge level is low.

The more power provided to the traction motor is reduced, the more illuminated segments on the display are narrowed ②.

NOTE:
If the power meter is selected on the trip computer, the meter is not displayed.

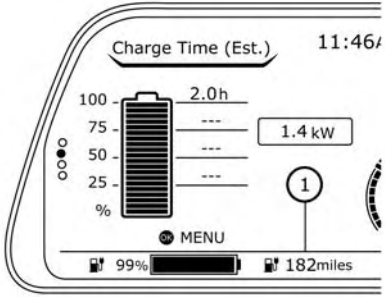

DRIVING RANGE

The driving range ① provides an estimated distance that the vehicle can be driven before recharging is necessary. The driving range is constantly being calculated, based on the amount of available Li-ion battery charge and the actual power consumption average.

NOTE:

- **The driving range display will flash when the low battery charge indicator illuminates. Additionally, if you continue to drive the vehicle in this state and the Li-ion battery is close to being completely discharged, "---" will be displayed. Charge the Li-ion battery as soon as possible. When the Li-ion battery is charged, the original display will be restored.**
- **After the vehicle is charged, the displayed driving range is calculated based on the actual average energy consumption of the previous driving. The displayed driving range will vary every time the vehicle is fully charged.**
- **The driving range increases or decreases when the air conditioner, heater or Li-ion battery warmer (if so equipped) is turned on or off, or when the ECO mode is selected, or when any other accessory is turned on or off based on driving.**

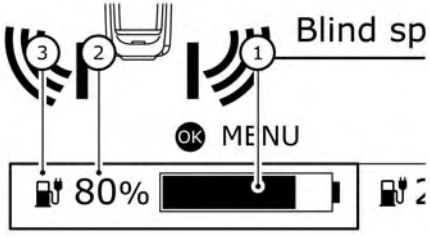

LI-ION BATTERY AVAILABLE CHARGE GAUGE

① This gauge indicates the approximate available Li-ion battery charge to run the vehicle.

② This figure shows the current state of charge (%) of the vehicle.

③ Low battery charge indicator : This indicator illuminates yellow when the available Li-ion battery charge is getting low.

Charge the Li-ion battery before the blue bar of the gauge ① disappears.

The low battery charge indicator ③ illuminates yellow when the available Li-ion battery charge is getting low. Charge as soon as it is convenient, preferably before the blue bar of the gauge ① disappears. When the blue bar of the gauge ① disappears and the charge indicator ③ illuminates, there is a very small reserve of Li-ion battery charge remaining.

NOTE:

- **The length of the blue bar of the gauge ① is determined by the available charge and the amount of charge the Li-ion battery is capable of storing at the current temperature.**
- **Temperature affects the amount of charge the Li-ion battery is capable of storing. The Li-ion battery is capable of storing less power when the Li-ion battery temperature is cold. The Li-ion battery is capable of storing more power when the Li-ion battery temperature is warm. The length of the blue bar of the gauge ① can change based on the amount of power the Li-ion battery is capable of storing. For example, when the Li-ion battery becomes colder, a longer blue bar of the gauge ① illuminates because the available charge is a greater percentage of the Li-ion battery's capability of storing power. When the Li-ion battery becomes warmer, a shorter blue bar of the gauge ① illuminates because the remaining energy is a lower percentage of the Li-ion battery's capability of storing power.**

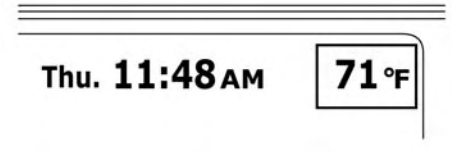

OUTSIDE AIR TEMPERATURE

The outside air temperature is displayed in °F or °C.

The display may differ from the actual outside temperature displayed on various signs or billboards.

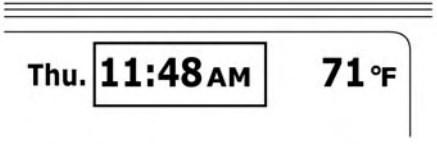

CLOCK

For models without a Navigation System:

Adjust the clock on the setting screen of the vehicle information display. For additional information, refer to "Settings" in this section. If the power supply (12-volt battery) is disconnected, the clock will not indicate the correct time. Readjust the time.

For models with a Navigation System:

This clock is synchronized with the clock displayed on the navigation system screen. For additional information, refer to the separate NissanConnect® Manual (for Leaf).

ECO MODE INDICATOR

This indicator in the vehicle information display shows the status of the e-Pedal system. When the e-Pedal system is turned off, the indicator changes to "e-Pedal OFF". For additional information, refer to "e-Pedal system" in the "Starting and driving" section of this manual.

E-PEDAL SYSTEM INDICATOR

This indicator "e-Pedal" illuminates within the vehicle information display when the e-Pedal system has been activated. The "e-Pedal OFF" illuminates when the system deactivated.

WARNING LIGHTS, INDICATOR LIGHTS AND AUDIBLE REMINDERS

	12-volt battery charge warning light		Low tire pressure warning light		High Beam Assist indicator light (if so equipped)
ABS			Master warning light (red/ yellow)		Plug-in indicator light
or	Anti-lock Braking System (ABS) warning light				
OFF	Approaching Vehicle Sound for Pedestrians (VSP) system warning light		Power steering warning light		Power limitation indicator light
OFF	Automatic Emergency Braking (AEB) system warning light (if so equipped)		Seat belt warning light		READY to drive indicator light
OFF	Automatic Emergency Braking (AEB) with Pedestrian Detection system warning light (if so equipped)		Supplemental air bag warning light		Security indicator light

	Brake system warning light (yellow)	(P) or PARK	Electronic parking brake indicator light		Slip indicator light
BRAKE	Brake warning light (red)		Exterior light indicator light		Turn signal/hazard indicator lights
or					
	Electronic parking brake system warning light (yellow)		Front fog light indicator light (if so equipped)	OFF	Vehicle Dynamic Control (VDC) OFF indicator light
	Electric shift control system warning light	OFF	Front passenger air bag status light		
	Electric Vehicle (EV) system warning light		High beam indicator light (blue)		

CHECKING LIGHTS

With all doors closed, apply the parking brake, fasten the seat belts and place the power switch for LEAF to the ON position without starting the hybrid system. The following lights (if so equipped) will come on:

,

The following lights (if so equipped) come on briefly and then turn off:

(yellow), , BRAKE or (red), ABS or , , , , , , ,

If any light does not come on or operate in a way other than described, it may indicate a burned-out bulb and/or a system malfunction. Have the system checked. It is recommended that you visit a NISSAN certified LEAF dealer for this service.

Some indicators and warnings are also displayed on the vehicle information display. For additional information, refer to "Vehicle information display" in this section.

WARNING LIGHTS

For additional information, refer to "Vehicle information display" in this section.

12-volt battery charge warning light

The DC/DC converter converts 400 volt Li-ion battery voltage to charge the 12-volt battery.

This light illuminates continuously after the bulb is checked when the power switch is in the ON position, and turns off when the power switch is placed in the READY to drive position.

When this warning light illuminates, a chime sounds and the following warnings are also displayed.

- Master warning (red)
- EV system warning light

The following messages also flash on and off on the vehicle information display.

If the vehicle is being driven; "Stop the vehicle" and if the vehicle is stopped; "When parked apply parking brake". When these messages flash, immediately stop the vehicle in a safe location, pull the parking brake switch and push the P (Park) position switch on the shift lever to place the vehicle in the P (Park) position. The warning on the meter and the chime stops when the parking brake is operated or the vehicle is in the P (Park) position. Have the system checked. It is recommended that you visit a NISSAN certified LEAF dealer for this service.

CAUTION

- **The DC/DC converter system may not be functioning properly if the 12-volt battery charge warning light illuminates continuously when the power switch is in the READY to drive position. Immediately stop the vehicle in a safe location and have the system checked. It is recommended that you visit a NISSAN certified LEAF dealer for this service.**
- **The DC/DC converter system may not be functioning properly if the 12-volt warning light illuminates continuously when the power switch is in the READY to drive position. Do not charge the 12-volt battery while this warning light is illuminated. It may lead to a malfunction of the DC/DC converter system. Have the system**

checked. It is recommended that you visit a NISSAN certified LEAF dealer for this service.

NOTE:

- **If the vehicle does not go into the READY to drive position (when the power switch is pushed and the brake pedal is depressed), jump-start the vehicle to place the power switch in the READY to drive position. For additional information, refer to "Jump starting" in the "In case of emergency" section of this manual.**
- **Do not jump-start the vehicle if the conditions below occur. Have the system checked. It is recommended that you visit a NISSAN certified LEAF dealer for this service:**
  - **If the 12-volt charge warning light turns off when the vehicle is in the READY to drive mode, the 12-volt battery may be discharged or there may be a malfunction in the 12-volt battery related system.**
  - **If the 12-volt charge warning light continues to illuminate when the vehicle is in the READY to drive mode, there may be a malfunction in the DC/DC converter. Have the system checked. It is recommended that you visit a NISSAN certified LEAF dealer for this service.**

ABS or Anti-lock Braking System (ABS) warning light

When the power switch is in the ON or READY to drive position, the Anti-lock Braking System (ABS) warning light illuminates and then turns off. This indicates the ABS is operational.

If the ABS warning light illuminates while the power switch is in the READY to drive position, or while driving, it may indicate the ABS is not functioning properly. Have the system checked. It is recommended that you visit a NISSAN certified LEAF dealer for this service.

If an ABS malfunction occurs, the anti-lock function is turned off. The brake system then operates normally, but without anti-lock assistance. For additional information, refer to "Brake system" in the "Starting and driving" section of this manual.

Approaching Vehicle Sound for Pedestrians (VSP) system warning light

The Approaching Vehicle Sound for Pedestrians (VSP) system warning light is located on the instrument panel.

This light comes on if there is a malfunction in the VSP system.

If the VSP system warning light illuminates while the power switch is in the ON position, or in the READY to drive position, it may indicate the VSP system is not functioning properly. Have the system checked. It is recommended that you visit a NISSAN certified LEAF dealer for this service.

For additional information, refer to "Approaching Vehicle Sound for Pedestrians (VSP) system" in the "EV overview" section of this manual.

Automatic Emergency Braking (AEB) system warning light (if so equipped)

This light comes on when the power switch is placed in the ON position. It turns off after the hybrid system is started.

This light illuminates when the AEB system is set to OFF on the meter display.

If the light illuminates when the AEB system is on, it may indicate that the system is unavailable. For additional information, refer to "Automatic Emergency Braking (AEB)" in the "Starting and driving" section of this manual.

Automatic Emergency Braking (AEB) with Pedestrian Detection system warning light (if so equipped)

This light comes on when the power switch is placed in the ON position. It turns off after the hybrid system is started.

This light illuminates when the AEB with Pedestrian Detection system is set to OFF in the vehicle information display.

If the light illuminates when the AEB with Pedestrian Detection system is on, it may indicate that the system is unavailable. For additional information, refer to "Automatic Emergency Braking (AEB) with Pedestrian Detection" in the "Starting and driving" section of this manual.

Brake system warning light (yellow)

This light functions for both the cooperative regenerative brake and the electronically driven intelligent brake systems.

When the power switch is placed in the ON position or in the READY to drive position, the light remains illuminated for about 2 or 3 seconds. If the light illuminates at any other time, it may indicate that the cooperative regenerative brake and/or the electronically driven intelligent brake systems are not functioning properly. Have the system checked. It is recommended that you visit a NISSAN certified LEAF dealer for this service.

If the BRAKE warning light (red) also illuminates, stop the vehicle immediately and have the system checked. It is recommended that you visit a NISSAN certified LEAF dealer for this service. For additional information, refer to "Brake system" in the "Starting and driving" section of this manual.

WARNING

- **Pressing the brake pedal when the power switch position is not in the ON or READY to drive position and/or low brake fluid level may increase the stopping distance and braking will require greater pedal effort as well as pedal travel.**
- **If the brake fluid level is below the minimum or MIN mark on the brake fluid reservoir, do not drive until the brake system has been checked. It is recommended that you visit a NISSAN certified LEAF dealer for this service.**
- **The cooperative regenerative brake system may not be working properly if the brake system warning light illuminates when the READY to drive indicator light is ON. If you judge it to be safe, drive carefully to the nearest service station for repairs. Otherwise, have your vehicle towed because driving could be dangerous.**

BRAKE or Brake warning light (red)

When the power switch is placed in the ON position or in the READY to drive position, the light remains illuminated for about a few seconds. If the light illuminates at any other time, it may indicate that the hydraulic brake system is not functioning properly. If the BRAKE warning light illuminates, stop the vehicle immediately and have the system checked. It is recommended that you visit a NISSAN certified LEAF dealer for this service.

Parking brake indicator:

When the power switch is placed in the ON position, the light comes on when the parking brake is applied.

Low brake fluid warning light:

When the power switch is in the ON position, the light warns of a low brake fluid level. If this warning light illuminates, the Vehicle Dynamic Control (VDC) warning light and the brake system warning light (yellow) also illuminate.

If the light illuminates while the power switch is in the READY to drive position with the parking brake not applied, stop the vehicle and perform the following items.

1. Check the brake fluid level. If brake fluid is necessary, add fluid and have the system checked. It is recommended that you visit a NISSAN certified LEAF dealer for this service. For additional information, refer to "Brake fluid" in the "Maintenance and do-it-yourself" section of this manual.
2. If the brake fluid level is correct, have the warning system checked. It is recommended that you visit a NISSAN certified LEAF dealer for this service.

WARNING

- **Your brake system may not be working properly if the warning light is on. Driving could be dangerous. If you judge the brake system to be safe, drive carefully to the nearest service station for repairs. Otherwise, have your vehicle towed because driving it could be dangerous.**
- **Pressing the brake pedal when the power switch position is not in the ON or READY to drive position and/or low brake fluid level may increase the stopping distance and braking will require greater pedal effort as well as pedal travel.**
- **If the brake fluid level is below the minimum or MIN mark on the brake fluid reservoir, do not drive until the brake system has been checked. It is recommended that you visit a NISSAN certified LEAF dealer for this service.**

Electronic brake system warning light (yellow)

The electronic parking brake system warning light function for the electronic braking brake system. When the power switch is placed in the ON position, the light illuminates for a few seconds. If the warning light illuminates at any other time, it may indicate that the electronic parking brake system is not function properly. Have the system checked immediately. It is recommended that you visit a NISSAN certified LEAF dealer for this service.

Electric shift control system warning light

This light illuminates to warn when a malfunction occurs in the electric shift control system. When the master warning light illuminates, the chime sounds and the message, "When parked apply parking brake", is displayed on the vehicle information display.

When the power switch is in the OFF position, the chime sounds continuously. Make sure the parking brake is applied.

Have the system checked. It is recommended that you visit a NISSAN certified LEAF dealer for this service.

Electric Vehicle (EV) system warning light

This light illuminates if there is a malfunction in the following systems. Have the system checked. It is recommended that you visit a NISSAN certified LEAF dealer for this service.

- Traction motor and inverter system
- Charge port or on board charger
- Li-ion battery system
- Cooling system
- Shift control system
- Emergency shut off system is activated. For additional information, refer to "Emergency shut-off system" in the "EV overview" section of this manual.

Low tire pressure warning light

Your vehicle is equipped with a Tire Pressure Monitoring System (TPMS) that monitors the tire pressure of all tires.

The low tire pressure warning light warns of low tire pressure or indicates that the TPMS is not functioning properly.

After the power switch is placed in the ON position, this light illuminates for about 1 second and then turns off.

Low tire pressure warning

If the vehicle is being driven with low tire pressure, the warning light will illuminate. The "Low Tire Pressure — Add Air" warning also appears on the vehicle information display.

When the low tire pressure warning light illuminates, you should stop and adjust the tire pressure to the recommended COLD tire pressure shown on the Tire and Loading Information label. The low tire pressure warning light does not automatically turn off when the tire pressure is adjusted. After the tire is inflated to the recommended pressure, the vehicle must be driven at speeds above 16 mph (25 km/h) to activate the TPMS and turn off the low tire pressure warning light. Use a tire pressure gauge to check the tire pressure.

The "Low Tire Pressure — Add Air" warning appears each time the power switch is placed in the ON position as long as the low tire pressure warning light remains illuminated.

For additional information, refer to "Vehicle information display" in this section, "Tire Pressure Monitoring System (TPMS)" in the "Starting and driving" section and "In case of emergency" section of this manual.

TPMS malfunction

If the TPMS is not functioning properly, the low tire pressure warning light will flash for approximately 1 minute when the power switch is placed in the ON position. The light will remain on after the 1 minute. Have

the system checked. It is recommended that you visit a NISSAN certified LEAF dealer for this service. The "Low Tire Pressure — Add Air" warning does not appear if the low tire pressure warning light illuminates to indicate a TPMS malfunction.

For additional information, refer to "Vehicle information display" in this section and "Tire Pressure Monitoring System (TPMS)" in the "Starting and driving" section of this manual.

WARNING

- **Radio waves could adversely affect electric medical equipment. Those who use a pacemaker should contact the electric medical equipment manufacturer for the possible influences before use.**
- **If the light does not illuminate when the power switch is placed in the ON position, have the vehicle checked. It is recommended that you visit a NISSAN certified LEAF dealer as soon as possible for this service.**
- **If the light illuminates while driving, avoid sudden steering maneuvers or abrupt braking, reduce vehicle speed, pull off the road to a safe location and stop the vehicle as soon as possible. Driving with underinflated tires may permanently damage the tires and increase the likelihood of tire failure. Serious vehicle damage could occur and may lead to an accident and could result in serious personal injury or death. Check the tire pressure for all four tires. Adjust the tire pressure to the recommended COLD tire pressure shown on the Tire and Loading Information label to turn the low tire pressure warning light OFF. If the light still illuminates while driving after adjusting the tire pressure, a tire may be flat or the TPMS may be malfunctioning. If you have a flat tire, replace it with a spare tire as soon as possible. If no tire is flat and all tires are properly inflated, have the vehicle checked. It is recommended that you visit a NISSAN certified LEAF dealer for this service.**
- **When replacing a wheel without the TPMS such as a spare tire, the TPMS will not function and the low tire pressure warning light will flash for approximately 1 minute. The light will remain on after 1 minute. Have the system checked. It is recommended that you visit a NISSAN certified LEAF dealer as soon as possible for tire replacement and/or system resetting.**
- **Replacing tires with those not originally specified by NISSAN could affect the proper operation of the TPMS.**

CAUTION

- **The TPMS is not a substitute for the regular tire pressure check. Be sure to check the tire pressure regularly.**
- **If the vehicle is being driven at speeds of less than 16 mph (25 km/h), the TPMS may not operate correctly.**
- **Be sure to install the specified size of tires to the four wheels correctly.**

Master warning light (red/yellow)

There are two types of master warning lights: yellow and red. These lights illuminate if any warning lights or indicator lights are illuminated or if various vehicle information warnings appear in the vehicle information display.

Yellow master warning light

This light illuminates when a yellow warning light within the vehicle information display is illuminated or when a message is displayed on the vehicle information display.

Red master warning light

This light illuminates when a red warning light within the vehicle information display is illuminated or when a warning is displayed on the vehicle information display.

Power steering warning light

When the power switch is in the ON position, the electric power steering warning light illuminates and turns off when the power switch is placed in the READY to drive position. This indicates the electric power steering system is operational.

If the electric power steering warning light illuminates while the READY to drive indicator light is ON, it may indicate the electric power steering system is not functioning properly and may need servicing. Have the electric power steering system checked. It is recommended that you visit a NISSAN certified LEAF dealer for this service.

When the electric power steering warning light illuminates while the READY to drive indicator is ON, the power assist to the steering will cease operation but you will still have control of the vehicle. At this time, greater steering efforts are required to operate the steering wheel, especially in sharp turns and at low speeds.

For additional information, refer to "Power steering system" in the "Starting and driving" section of this manual.

Seat belt warning light

The light and chime remind you to fasten your seat belts. The light illuminates whenever the power switch is placed in the ON position, and will remain illuminated until the driver's seat belt is fastened. At the same time, the chime will sound for approximately 6 seconds unless the driver's seat belt is securely fastened.

The seat belt warning light for the front passenger will illuminate if the seat belt is not fastened when the front passenger's seat is occupied. The front passenger seat belt warning light does not activate until 5 seconds after the power switch is in the ON position.

For additional information, refer to "Seat belts" in the "Safety — Seats, seat belts and supplemental restraint system" section of this manual for precautions on seat belt usage.

Supplemental air bag warning light

After turning the power switch to the ON position, the supplemental air bag warning light will illuminate. The supplemental air bag warning light will turn off after about 7 seconds if the supplemental front air bag and supplemental side air bag, curtain

side-impact air bag systems and/or pretensioner seat belt are operational.

If any of the following conditions occur, the front air bag, side air bag, curtain air bag and pretensioner systems need servicing and your vehicle must be taken to your nearest NISSAN certified LEAF dealer.

- The supplemental air bag warning light remains on after approximately 7 seconds.
- The supplemental air bag warning light flashes intermittently.
- The supplemental air bag warning light does not illuminate at all.

Unless checked and repaired, the Supplemental Restraint Systems and/or the pretensioners may not function properly.

For additional information, refer to "Supplemental restraint system (SRS)" in the "Safety — Seats, seat belts and supplemental restraint system" section of this manual.

WARNING

If the supplemental air bag warning light is on, it could mean that the front air bag, side air bag, curtain air bag and/or pretensioner systems will not operate in an accident. To help avoid injury to yourself or others, have your vehicle checked. It is recommended that you visit a NISSAN certified LEAF dealer as soon as possible for this service..

INDICATOR LIGHTS

For additional information, refer to "Vehicle information display" in this section.

(P) or PARK Electronic parking brake indicator light

When the power switch is placed in the ON position, the light comes on when the parking brake is applied.

Exterior light indicator light

This indicator illuminates when the headlight switch is turned to the AUTO, or position and the front parking lights, side marker lights, tail and license plate lights are on. The indicator turns off when these lights are turned off.

Front fog light indicator light (if so equipped)

The front fog indicator light illuminates when the front fog lights are on. For additional information, refer to "Fog light switch" in this section.

Front passenger air bag status light

The front passenger air bag status light (located on the center of the instrument panel) will be lit and the passenger front air bag will be turned off depending on how the front passenger seat is being used.

For front passenger air bag status light operation, refer to "NISSAN Advanced Air Bag System (front seats)" in the "Safety — Seats, seat belts and supplemental restraint system" section of this manual.

High Beam Assist indicator light (if so equipped)

The indicator light illuminates when the headlights come on while the headlight switch is in the AUTO position with the high beam selected. This indicates that the high

beam assist system is operational. For additional information, refer to "Headlight beam select" in this section.

High beam indicator light (blue)

This light illuminates when the headlight high beam is on and goes out when the low beam is selected.

Plug-in indicator light

This light illuminates when the charge connector is connected to the vehicle and blinks during charging.

NOTE:
If the charge connector is connected to the vehicle, the power switch cannot be placed in the READY to drive position.

Power limitation indicator light

When the power limitation indicator light is illuminated, the power provided to the traction motor is reduced. Therefore the vehicle is not as responsive when the accelerator is depressed while the power limitation light is illuminated.

When this light comes on, the warning display appears within the vehicle information display. Follow the instructions provided on the vehicle information display.

This light illuminates in the following conditions.

- Li-ion battery available charge is extremely low
- Li-ion battery temperature is very low (approximately −4°F (−20°C)
- When the temperature of the EV system is high (motor, inverter, coolant system, Li-ion battery etc.)
- When the EV system has a malfunction.

If the low battery charge indicator is illuminated, charge the Li-ion battery as soon as possible.

If this indicator illuminates because the Li-ion battery is cold due to low outside temperatures, move the vehicle to a warmer location. The Li-ion battery temperature may be increased by charging the Li-ion battery.

If the light illuminates when the EV system becomes hot due to continuous hill climbing, either continue driving at a slower safe speed or stop the vehicle in a safe location. If this indicator does not turn off, have the system checked. It is recommended that you visit a NISSAN certified LEAF dealer for this service.

The indicator illuminates when a part in the EV system has malfunctioned. If the indicator illuminates in a situation other than those described above, or if it does not turn off, there may be a system malfunction. Have the system checked. It is recommended that you visit a NISSAN certified LEAF dealer for this service.

WARNING

Power limitation mode can result in reduced power and vehicle speed. The reduced speed may be lower than other traffic, which could increase the chance of a collision. Be especially careful when driving. If the vehicle cannot maintain a safe driving speed, pull to the side of the road in a safe area. Charge the Li-ion battery if the charge is low or allow the Li-ion battery to cool.

NOTE:
You can reduce charging time and keep the Li-ion battery temperature lower if you:

- **Charge more frequently in smaller amounts, and**
- **Keep the battery at a higher level of charge.**

READY to drive indicator light

The READY to drive indicator light illuminates when the EV system is powered and the vehicle may be driven.

The READY to drive indicator light will turn off in the following conditions.

- Certain EV system malfunctions.
- The READY to drive indicator light turns off immediately before the Li-ion battery is completely discharged. If the Li-ion battery becomes completely discharged, the vehicle must be charged in order to be driven. For additional information, refer to "Low battery charge indicator" in this section.

Security indicator light

This light blinks when the power switch is in the ACC, OFF or LOCK position. This function indicates the security system equipped on the vehicle is operational.

If the security system is malfunctioning, this light will remain on while the power switch is in the ON position. For additional information, refer to "Security systems" in this section.

Slip indicator light

This indicator will blink when the VDC system or the traction control system is operating, thus alerting that the vehicle is nearing its traction limits. The road surface may be slippery.

You may feel or hear the system working; this is normal. The light will blink for a few seconds after the VDC system stops limiting wheel spin.

The indicator light also comes on when you place the power switch in the ON position.

The light will turn off after approximately 2 seconds if the system is operational. If the light does not come on, have the system checked. It is recommended that you visit a NISSAN certified LEAF dealer for this service.

Turn signal/hazard indicator lights

This light flashes when the turn signal switch lever or hazard switch is turned on.

Vehicle Dynamic Control (VDC) OFF indicator light

This light illuminates when the Vehicle Dynamic Control (VDC) switch is pushed to OFF. This indicates that the VDC system is not operating. For additional information, refer to "Vehicle Dynamic Control (VDC) system" in the "Starting and driving" section of this manual.

AUDIBLE REMINDERS

Brake pad wear warning

The disc brake pads have audible wear warnings. When a brake pad requires replacement, it will make a high pitched

scraping sound when the vehicle is in motion. This scraping sound will first occur only when the brake pedal is depressed. After more wear of the brake pad, the sound will always be heard even if the brake pedal is not depressed. Have the brakes checked as soon as possible if the warning sound is heard.

Electric shift control system reminder chime

If an improper shift operation is performed, for safety reasons a chime will sound and at the same time, depending on the conditions, the operation will be canceled or the shift position will switch to the N (Neutral) position.

For additional information, refer to "Driving the vehicle" in the "Starting and driving" section of this manual.

Key reminder chime

A chime will sound if the driver's side door is opened while the power switch is pushed to the ON or ACC position.

Make sure that the power switch is pushed to the OFF position, and take the Intelligent Key with you when leaving the vehicle.

Light reminder chime

The light reminder chime will sound when the driver side door is opened with the light switch in the ≡DC or ≡O position, and the power switch is in the ACC, OFF or LOCK position.

Turn the light switch off when you leave the vehicle.

Parking brake reminder chime

A chime sounds if the parking brake is set and the vehicle is driven. The chime will stop if the parking brake is released or the vehicle speed returns to zero.

Power switch reminder chime

The power switch reminder chime will sound when the driver's door is opened while the power switch is in the ON or READY to drive position. Push the power switch to the OFF position.

Seat belt warning chime

The seat belt warning chime will sound for about 6 seconds unless the driver's seat belt is securely fastened.

12-volt battery charge warning chime

If the 12-volt battery charge warning light illuminates, the chime will sound when a warning message is displayed in the vehicle information display.

When the chime sounds, immediately stop the vehicle in a safe location and push the P (Park) position switch on the shift lever and apply the parking brake. The 12-volt battery charge warning light turns off and the chime will stop when the parking brake is applied or the vehicle is placed in the P (Park) position. Have the system checked. It is recommended that you visit a NISSAN certified LEAF dealer for this service. For additional information, refer to "12-volt battery charge warning light" in this section.

VEHICLE INFORMATION DISPLAY

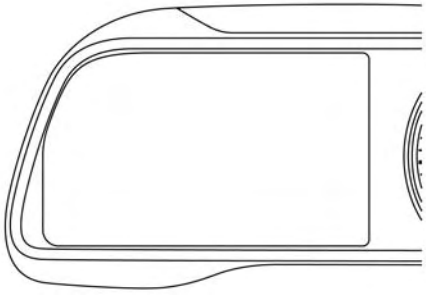

The vehicle information display is located to the left of the speedometer. It displays items such as

- Battery information
- Energy economy
- Average vehicle speed
- Driving distance
- Driving time
- Cruise control information
- Intelligent Key information
- Indicators and warnings

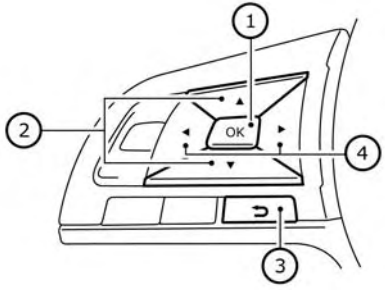

HOW TO USE THE VEHICLE INFORMATION DISPLAY

The vehicle information display can be changed by using the ▲ ▼ ◀ ▶ ⮌ and OK switches located on the steering wheel.

① **OK** Use this switch to change or select items.

② ▲ ▼ Use these switches to navigate the vehicle information display.

③ ⮌ Use this switch to return to the previous menu.

④ ◀ ▶ Use these switches to navigate the vehicle information display.

The **OK**, ▲ ▼ ◀ ▶ ⮌ switches also control audio and control panel functions in some conditions. Most screens and menus offer instruction prompts of the steering switches to indicate how to control the vehicle information display. White dots appear on the left side of the vehicle information display when there is more than one page of menu items. The **OK**, ▲ and ▼ switches change the audio source and the buttons also control voice recognition manual mode. For additional information, refer to the separate NissanConnect® Manual (for Leaf).

STARTUP DISPLAY

With the vehicle in the ON position, the vehicle information display may display the following screens:

- Battery information
- Audio
- Navigation
- Energy Economy
- Safety Shield

- Warnings
- Settings

Warnings will only display if there are any present. For additional information, refer to "Vehicle information display warnings and indicators" in this section.

To control which items display in the vehicle information display, refer to "Meter settings" in this section.

SETTINGS

The settings mode allows you to change the information displayed in the vehicle information display as well as enable and disable various vehicle features and systems. The settings include:

- VDC Setting
- Driver Assistance
- Customize Display
- Vehicle Settings
- EV Settings
- TPMS Settings
- Maintenance
- Clock
- Unit/Language
- Factory Reset

VDC Setting

The VDC setting menu allows the user to the adjust the VDC settings.

Menu Item	Result
VDC Setting	Allows user to turn the Vehicle Dynamic Control (VDC) system on or off.

Driver Assistance

The driver assistance menu allows the user to change the settings for driving, parking, and braking aids.

Menu Item		Result
Steering Assist (if so equipped)		Allows user to turn the steering assist feature on or off. For additional information, refer to "ProPILOT™ Assist" in the "Starting and driving" section of this manual.
Lane		Displays the available lane options.
	Lane Departure Warning	Allows user to turn the Lane Departure Warning on and off. For additional information, refer to "Lane Departure Warning (LDW)" in the "Starting and driving" section of this manual.
	Lane Departure Prevention	Allows user to turn the Lane Departure Warning on and off. For additional information, refer to "Intelligent Lane Intervention (I-LI)" in the "Starting and driving" section of this manual.
Blind Spot		Displays the available blind spot options.
	Blind Spot Warning	Allows user to turn the Blind Spot Warning on and off. For additional information, refer to "Blind Spot Warning" in the "Starting and driving" section of this manual.
	Side Indicator Brightness	Allows user to set the brightness of the side indicator.
Emergency Brake		Displays the available emergency brake options.
	System	Allows user to turn the emergency brake on and off. For additional information, refer to "Automatic Emergency Braking (AEB)" in the "Starting and driving" section of this manual.
Parking Aids		Displays the available parking aids.
	Moving Object	Allows user to turn the Moving Object Detection on and off. For additional information, refer to "Moving Object Detection" in the "Monitor, climate, audio, phone and voice recognition systems" section of this manual.
	Cross Traffic	Allows user to turn the cross traffic alert on and off. For additional information, refer to "Rear Cross Traffic Alert (RCTA)" in the "Starting and driving" section of this manual.
Driver Attention Alert (if so equipped)		Allows user to turn the driver attention alert on or off. For additional information, refer to "Intelligent Driver Alertness (I-DA)" in the "Starting and driving" section of this manual.
Timer Alert		Allows user to set or reset an alert at a specific tune interval.

Menu Item		Result
Low Temperature Alert		Allows user to turn the low temperature alert on or off.
Chassis Control (if so equipped)		Displays the available chassis controls.
	Active Trace Control	Allows user to turn the driver attention alert on or off. For additional information, refer to “Intelligent Trace Control (I-TC)” in the “Starting and driving” section of this manual.
e-Pedal		Displays the available e-Pedal options.
	Retain Mode	Allows user to turn the retain mode on or off. For additional information, refer to “e-Pedal system” in the “Starting and driving” section of this manual.

Customize Display

The customize display menu allows the user to change the settings for the vehicle information display.

Menu Item		Result
Main Menu Selection		Displays the available main menu selection options.
	Cruise (if so equipped)	Allows user to turn the Cruise screen on or off in the vehicle information display.
	Driving Aids	Allows user to turn the safety shield screen on or off in the vehicle information display.
	Status	Allows user to turn the status screen on or off in the vehicle information display.
	Tire Pressures	Allows user to turn the tire pressures screen on or off in the vehicle information display.
	Drive Computer	Allows user to turn the drive computer screen on or off in the vehicle information display.
	Chassis Control	Allows user to turn the chassis control screen on or off in the vehicle information display.
ECO Info Settings		Displays the available ECO Info Settings.
	ECO Drive Report	Allows user to turn the ECO drive report on or off.
	View History	Allows user to view and reset the ECO drive report history.
Navigation Settings		Displays the available navigation settings.
	Alerts	Allows user to turn the navigation alerts on or off.
Cruise Screen Transition (if so equipped)		Allows user to turn the Cruise screen transition on or off.
Welcome Effect		Displays the available welcome effects.
	Gauges	Allows user to turn the gauges effect on or off.
	Animation	Allows user to turn the animation effect on or off.

Vehicle Settings

The vehicle settings menu allows the user to change the settings for the lights, locks and wipers.

Menu Item		Result
Lighting		Displays the available lighting options.
	Auto Room Lamp	Allows user to turn the auto room lamp on or off
	Light Sensitivity	Allows user to change when the lights illuminate based on the brightness outside the vehicle.
	Light Off Delay	Allows user to change the duration of time that the automatic headlights stay on after the vehicle is shut off.
Locking		Displays the available locking options.
	Ext. Door Switch	Allows user to turn the exterior door switch on or off. When turned on, the request switch on the door is activated.
	Selective Unlock	Allows user to turn selective unlock on or off. When turned on, only the current door is unlocked after the door unlock operation. When the door handle request switch on the driver's or front passenger's side door is pushed to be unlocked, only the corresponding door is unlocked first. All the doors can be unlocked if the door unlock operation is performed again within 5 seconds. When this item is turned off, all the doors will be unlocked after the door unlock operation is performed once.
Wipers		Displays the available wiper settings. For additional information, refer to "Wiper and washer switch" in this section.
	Speed Dependent	Allows user to turn the speed dependent feature on or off.

EV Settings

The EV settings menu allows the user to change the settings for charging the vehicle.

Menu Item	Result
Chg. Connector Lock	Allows user to lock or unlock the charging connection.
Charge Timer1	Allows user to set charge timer 1.
Charge Timer2	Allows user to set charge timer 2.
Chg. Timer Only at HOME (if so equipped)	Allows user to set charging timer only at home.
Charge Time Screen	Allows user to select the display time screen based on charge method.
Climate Control Timer1	Allows user to set climate control timer 1.
Climate Control Timer2	Allows user to set climate control timer 2.

TPMS Settings

The TPMS settings menu allows the user to change the tire pressure units displayed in the vehicle information display.

Menu Item	Result
TPMS Settings	Allows user to select the tire pressure units that will display in the vehicle information display.

Maintenance

The maintenance menu allows the user to set reminders for various vehicle maintenance items.

Menu Item		Result
Maintenance		Displays available maintenance reminder options.
	Tire	Allows user to set a reminder at a specific interval or reset the current one.
	Other	Allows user to set a reminder at a specific interval or reset the current one.

Clock

Menu Item	Result
Clock	When selected the following message appears: "Go to the settings menu on the center display to set clock". For additional information, refer to the separate NissanConnect® Manual (for Leaf).

Unit/Language

The unit/language menu allows the user to change the units shown in the vehicle information display.

Menu Item	Result
Mileage/Energy	Allows user to select the preferred mileage/energy unit of measure to display.
Tire Pressures	Allows user to select the preferred tire pressure unit of measure to display.
Temperature	Allows user to select the preferred temperature unit of measure to display.
Language	Allows user to select the preferred language to display.

Factory Reset

The factory reset menu allows the user to restore the vehicle information display settings to factory status.

Menu Item	Result
Factory Reset	Allows user to reset the vehicle information display settings to the original factory settings. Once selected, the user can confirm or deny the reset.

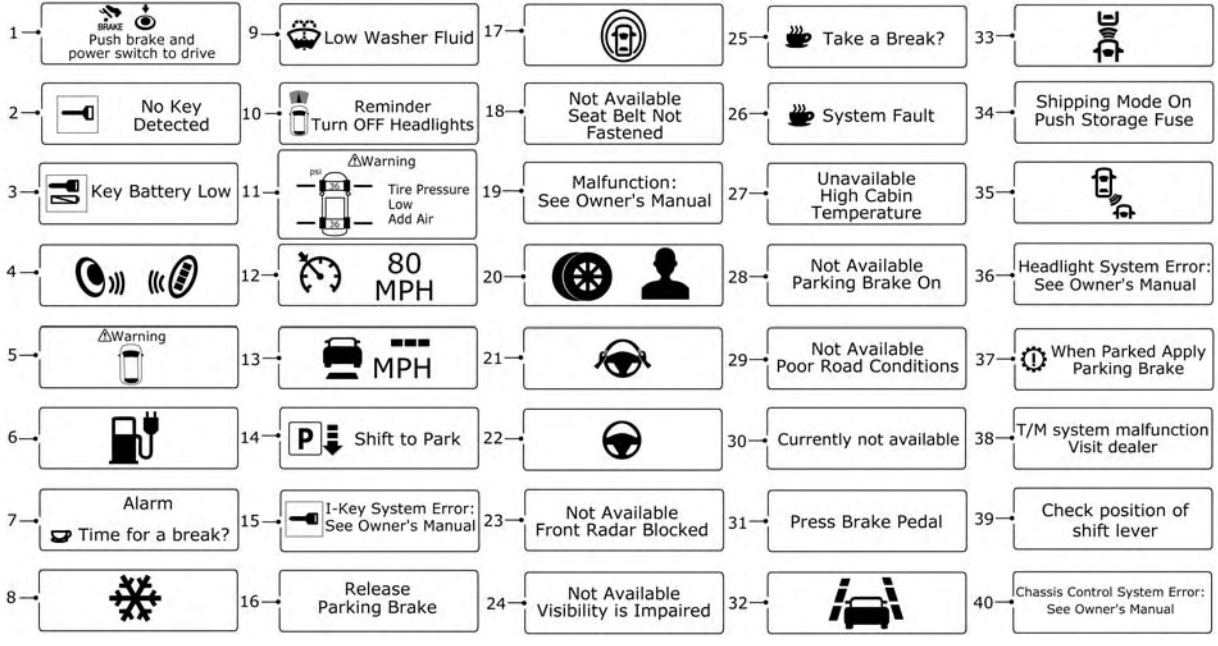

VEHICLE INFORMATION DISPLAY WARNINGS AND INDICATORS

1. Push brake and power switch to drive
2. No Key Detected
3. Key Battery Low
4. EV system operation for discharged Intelligent Key system indicator
5. Door open
6. Low battery charge indicator
7. Driver alert
8. Low outside air temperature
9. Low Washer Fluid (if so equipped)
10. Reminder Turn OFF Headlights
11. Tire Pressure Low — Add Air
12. Cruise control indicator (if so equipped)
13. Intelligent Cruise Control (ICC) indicators (if so equipped)
14. Shift to Park
15. Key System Error: See Owner's Manual
16. Release Parking Brake
17. ProPILOT™ Assist indicator (if so equipped)
18. Not Available Seat Belt Not Fastened (if so equipped)
19. Malfunction: See Owner's Manual
20. Indicators for maintenance
21. Steering Assist indicator (if so equipped)
22. Steering Assist warning (if so equipped)
23. Not Available Front Radar Blocked (if so equipped)
24. Not Available Visibility is impaired (if so equipped)
25. Driver Attention Alert Take a Break? (if so equipped)
26. Driver Attention Alert System Fault (if so equipped)
27. Unavailable High Cabin Temperature (if so equipped)
28. Not Available Parking Brake On (if so equipped)
29. Not Available Poor Road Conditions (if so equipped)
30. Currently not available (if so equipped)
31. Press Brake Pedal (if so equipped)
32. Lane Departure Warning (LDW)/ Intelligent Lane Intervention (I-LI) indicator (if so equipped)
33. Automatic Emergency Braking (AEB)/ Automatic Emergency Braking (AEB) with Pedestrian Detection indicator (if so equipped)
34. Shipping Mode On Push Storage Fuse
35. Blind Spot Warning (BSW)/Rear Cross Traffic Alert (RCTA) indicator (if so equipped)
36. Headlight System Error: See Owner's Manual (if so equipped)
37. When Parked Apply Parking Brake
38. T/M system malfunction Visit dealer
39. Check position of shift lever
40. Chassis control system error: See Owner's Manual

Push brake and power switch to drive

This indicator appears while the vehicle is in the P (Park) position. This indicator means that the EV system will start when the power switch is pressed with the brake pedal depressed.

No Key Detected

This warning appears in either of the following conditions:

No key inside the vehicle:

This warning appears when the door is closed with the Intelligent Key left outside the vehicle and the power switch in the ACC or ON position. Make sure that the Intelligent Key is inside the vehicle.

Unregistered Intelligent Key:

This warning appears when the power switch is placed in the ON, ACC or READY to drive position and the Intelligent Key cannot be recognized by the system. You cannot place the power switch in the READY to drive position with an unregistered key. Use an Intelligent Key that has been registered. For additional information, refer to "NISSAN Intelligent Key® system" in the "Pre-driving checks and adjustments" section of this manual.

Key Battery Low

This indicator appears when the Intelligent Key battery is running out of power.

If this indicator appears, replace the battery with a new one. For additional information, refer to "NISSAN Intelligent Key® battery replacement" in the "Maintenance and do-it-yourself" section of this manual.

EV system operation for discharged Intelligent Key system indicator

This indicator appears when the Intelligent Key battery is running out of power and when the Intelligent Key system and vehicle are not communicating normally.

If this indicator appears, touch the power switch with the Intelligent Key while depressing the brake pedal. For additional information, refer to "NISSAN Intelligent Key® battery discharge" in the "Starting and driving" section of this manual.

Door open

This warning appears if any of the doors and/or the rear hatch are open or not closed securely. The vehicle icon indicates which door or the rear hatch is open on the display. Make sure that all of the doors and the rear hatch are closed.

This warning also appears alternating with the Shift to Park warning while the driver's door is opened with the shift position in any position other than the P (Park) position. For additional information, refer to "Shift to Park" in this section.

Low Battery Charge indicator

This light illuminates when the available Li-ion battery charge is getting low. Charge as soon as it is possible, preferably before the Li-ion battery available charge gauge reaches 0%.

NOTE:
The low battery charge indicator turns off immediately before the Li-ion battery is completely discharged

and the vehicle will stop. If the Li-ion battery becomes completely discharged, the vehicle must be charged in order to be driven.

Driver alert

This warning appears when the previously set time for a break is reached. You can set the time for up to 6 hours in the setting menu. For additional information, refer to "Vehicle information display" in this section.

Low outside air temperature

The outside air temperature is displayed in °F or °C in the range of –20°F to 140°F (–30°C to 60°C).

The outside air temperature mode includes a low temperature warning feature. If the outside air temperature is below 37°F (3°C), the warning is displayed on the screen.

The outside temperature sensor is located in front side of the vehicle. The sensor may be affected by road, wind directions and other driving conditions. The display may differ from the actual outside temperature or the temperature displayed on various signs or billboards.

Low Washer Fluid (if so equipped)

This warning appears when the washer tank fluid is at a low level. Add washer fluid as necessary. For additional information, refer to "Windshield washer fluid" in the "Maintenance and do-it-yourself" section.

Reminder Turn OFF Headlights

This warning appears when the power switch is turned to the OFF position but the headlight switch is still on. Turn off the headlight switch.

Tire Pressure Low - Add Air

This warning appears when the low tire pressure warning light in the meter illuminates and low tire pressure is detected. The warning appears each time the power switch is placed in the ON position as long as the low tire pressure warning light remains illuminated.

If this warning appears, stop the vehicle and adjust the tire pressure to the recommended COLD tire pressure shown on the Tire and Loading Information label. For additional information, refer to "Low tire pressure warning light" in this section and "Tire Pressure Monitoring System (TPMS)" in the "Starting and driving" section of this manual.

Cruise control indicator (if so equipped)

This indicator shows the cruise control system status.

When cruise control is activated, a green circle will illuminate to indicate it is set. The vehicle information display will also display the speed the cruise control was set at. If you accelerate past the set speed, the speed will blink until you either cancel cruise control or go back to the set speed. If cruise control is on and canceled, the speed will be displayed to show the speed the vehicle will return to if the resume button is activated.

For additional information, refer to "Cruise control" in the "Starting and driving" section of this manual.

Intelligent Cruise Control (ICC) indicators (if so equipped)

This indicator shows the Intelligent Cruise Control (ICC) system status. The status is shown by the color. For additional information, refer to "Intelligent Cruise Control (ICC)" in the "Starting and driving" section of this manual.

Shift to Park

This warning appears alternately with door/rear hatch open warning when the driver's door is opened with the shift position in any position other than the P (Park) position. If this warning appears, push the P (Park) position switch and place in the P (Park) position.

For additional information, refer to "Door open" in this section.

Key System Error: See Owner's Manual

After the power switch is pushed to the ON position, this light comes on for about 2 seconds and then turns off.

The Key System Error message warns of a malfunction with the Intelligent Key system. If the light comes on while the motor is stopped, it may be impossible to start the motor.

If the light comes on while the motor is running, you can drive the vehicle. However, have it repaired as soon as possible. It is recommended that you visit a NISSAN certified LEAF dealer for this service.

Release Parking Brake

This warning appears when the vehicle speed is above 4 mph (7 km/h) and the parking brake is applied.

ProPILOT™ Assist indicator (if so equipped)

This indicator appears when the ProPILOT Assist system is engaged. For additional information, refer to "ProPILOT™ Assist" in the "Starting and driving" section of this manual.

Not Available Seat Belt Not Fastened

This indicator appears when the ProPILOT™ Assist system will not engage because the driver's seat belt is not fastened. For additional information, refer to "ProPILOT ™ Assist" in the "Starting and driving" section of this manual.

Malfunction: See Owner's Manual

This warning appears when one or more of the following systems (if so equipped) is not functioning properly:

- Lane Departure Warning (LDW)
- Intelligent Lane Intervention (I-LI)
- Blind Spot Warning (BSW)
- Rear Cross Traffic Alert (RCTA)
- ProPILOT™ Assist

If one or more of these warning appears, have the system checked. It is recommended that you visit a NISSAN certified LEAF dealer for this service.

Indicators for maintenance

These indicators appear when the customer set distance comes for replacing tires or other maintenance items. You can set or reset the distance for replacing tires and other maintenance items.

WARNING

The tire replacement indicator is not a substitute for regular tire checks, including tire pressure checks. For additional information, refer to "Changing wheels and tires" in the "Maintenance and do-it-yourself" section of this manual. Many factors including tire inflation, alignment, driving habits and road conditions affect tire wear and when tires should be replaced. Setting the tire replacement indicator for a certain driving distance does not mean your tires will last that long. Use the tire replacement indicator as a guide only and always perform regular tire checks. Failure to perform regular tire checks, including tire pressure checks could result in tire failure. Serious vehicle damage could occur and may lead to a collision, which could result in serious personal injury or death.

For scheduled maintenance items and intervals, refer to the NISSAN Service and Maintenance Guide.

Steering Assist indicator (if so equipped)

This indicator appears when the Steering Assist system is engaged. For additional information, refer to "ProPilot™ Assist" in the "Starting and driving" section of this manual.

Steering Assist warning (if so equipped)

This message may appear when the Steering Assist system is engaged.

It will be displayed under the following condition:

- When not holding the steering wheel or when there is no steering wheel operation.

Please hold the steering wheel immediately. When the steering operation is detected, the warning turns off and the steering assist function is automatically restored.

Not Available Front Radar Blocked (if so equipped)

This message appears when one or more of the following systems become unavailable due to an obstruction of the front radar.

- Intelligent Cruise Control (ICC)
- Automatic Emergency Braking (AEB)
- Automatic Emergency Braking (AEB) with Pedestrian Detection

For additional information, refer to "Intelligent Cruise Control (ICC)", "Automatic Emergency Braking (AEB)", or "Automatic Emergency Braking (AEB) with Pedestrian Detection" in the "Starting and driving" section of this manual.

Not Available Visibility is impaired (if so equipped)

This message may appear when the Intelligent Cruise Control (ICC) (with ProPILOT™ Assist) system is engaged.

Under the following conditions, the ICC (with ProPILOT™ Assist) system is automatically canceled:

- The camera area of the windshield is fogged up or covered with dirt, water, ice, snow, etc.
- Strong light, such as sunlight or high beams from oncoming vehicles, enters the front camera
- When the wiper (HI) operates

The system will be available when the above conditions no longer exist.

If the warning message continues to appear, stop the vehicle in a safe location, turn the hybrid system off and clean the windshield.

Driver Attention Alert Take a Break? (if so equipped)

This alert appears when the system has detected the driver may be displaying fatigue or a lack of attention.

Driver Attention Alert System Fault (if so equipped)

This warning appears when the Intelligent Driver Alertness (I-DA) system is not functioning properly.

For additional information, refer to "Intelligent Driver Alertness (I-DA)" in the "Starting and driving" section of this manual.

Unavailable High Cabin Temperature (if so equipped)

This message appears when the camera detects an interior temperature of more than approximately 104°F (40°C).

For additional information, refer to "Lane Departure Warning (LDW)" in the "Starting and driving" section of this manual.

Not Available Parking Brake On (if so equipped)

This message may appear when the Intelligent Cruise Control (ICC) (with ProPILOT™ Assist) system is engaged.

Under the following conditions, the ICC (with ProPILOT™ Assist) system is automatically canceled:

- The electronic parking brake is applied.

The above system cannot be used when the electronic parking brake is activated.

Not Available Poor Road Conditions (if so equipped)

This message may appear when the Intelligent Cruise Control (ICC) (with ProPILOT™ Assist) system or the ICC is engaged.

Under the following conditions, the ICC (with ProPILOT™ Assist) system or the ICC system is automatically canceled:

- When the VDC operates.
- When a wheel slips.

The above system cannot be used in some situations (VDC operates and wheel slip.)

Currently not available (if so equipped)

This message may appear when the Intelligent Cruise Control (ICC) (with ProPILOT™ Assist) system or the ICC is engaged.

Under the following conditions, the ICC (with ProPILOT™ Assist) system or the ICC system is automatically canceled:

- When the VDC operates.
- When a wheel slips.
- When the VDC system is turned off.

The above system cannot be used in some situations (VDC operates, wheel slip, and VDC system is off.)

Press Brake Pedal (if so equipped)

This message may appear in the following situations:

- The driver tries to release the electronic parking brake manually without depressing the brake pedal.
- The vehicle is stopped on a steep hill; and there is a possibility of moving backwards, even if the electronic parking brake is applied..
- The vehicle moves while the automatic brake hold is activated.

For additional information, refer to "Electronic parking brake" in the "Starting and driving" section of this manual.

Lane Departure Warning (LDW)/Intelligent Lane Intervention (I-LI) indicator (if so equipped)

This indicator shows when the LDW/I-LI systems are engaged.

For additional information, refer to "Warning systems switch" in this section and "Lane Departure Warning (LDW) system" and "Intelligent Lane Intervention (I-LI) system" in the "Starting and driving" section of this manual.

Automatic Emergency Braking (AEB)/Automatic Emergency Braking (AEB) with Pedestrian Detection indicator (if so equipped)

This indicator shows when the AEB or AEB with Pedestrian Detection system is engaged.

For additional information, refer to "Automatic Emergency Braking (AEB)" or "Automatic Emergency Braking (AEB) with Pedestrian Detection" the "Starting and driving" section of this manual.

Shipping Mode On Push Storage Fuse

This warning may appear if the extended storage switch is not pushed in. When this warning appears, push in the extended storage switch to turn off the warning.

For additional information, refer to "Extended storage switch" in the "Maintenance and do-it-yourself" section of this manual.

Blind Spot Warning (BSW)/Rear Cross Traffic Alert (RCTA) indicator (if so equipped)

This indicator shows when the BSW and RCTA systems are engaged.

For additional information, refer to "Blind Spot Warning (BSW)" and "Rear Cross Traffic Alert (RCTA)" in the "Starting and driving" section of this manual.

Headlight System Error: See Owner's Manual (if so equipped)

This warning appears when the LED headlights are not functioning properly.

If this warning appears, have your system checked. It is recommended that you visit a NISSAN certified LEAF dealer for this service.

When Parked Apply Parking Brake

This warning appears if there is a malfunction in the electric shift control system. This

warning appears when the parking brake is not applied, even after the vehicle has been parked. The master warning light (red) also illuminates and the chime sounds.

If the power switch cannot be placed in the OFF position, apply the parking brake and then place the power switch in the OFF position. The warning turns off and the chime stops.

If this warning appears, have your system checked. It is recommended that you visit a NISSAN certified LEAF dealer for this service.

T/M system malfunction Visit dealer

This warning appears if there is a malfunction in the electric shift control system but operation of the electric shift control is still possible. The master warning light (yellow) also illuminates and the chime sounds. When this occurs, check the shift position indicator by the shift lever or in the vehicle information display to make sure that shifting has been performed properly. It is recommended that you contact a NISSAN certified LEAF dealer as soon as possible.

Check position of shift lever

This warning appears if the system cannot detect the shift position. Make sure the vehicle is placed in a position properly.

The master warning light (yellow) also illuminates and the chime sounds. Check the shift position of the vehicle.

Chassis Control System Error: See Owner's Manual

This warning appears if the Integrated Dynamics-control Module detects an error in the Intelligent Trace Control, Intelligent Engine Brake, or the Active Ride Control systems. Have the system checked. It is recommended that you visit a NISSAN certified LEAF dealer for this service. For additional information, refer to "Chassis control" in the "Starting and driving" section of this manual.

WARNING INFORMATION DISPLAYS (MODELS WITH A NAVIGATION SYSTEM)

Low battery warning

When the low battery charge indicator and the master warning light (yellow) illuminate, the system displays a message on the navigation system screen that warns the driver that the Li-ion battery power level is low.

1. The notification is displayed on the upper left side of the STATUS screen. Touch [Show] to display the screen showing detailed information.
2. The system displays a message screen and announces the contents of the message to warn that the Li-ion battery power level is low. Check the message displayed on the screen. Touch [Nearby Stations] to search all charging stations that are located around the current vehicle position.
3. Touch [BACK] or push the **MAP** button to return to the vehicle location screen.

NOTE:

- **The low battery warning can be set to off. Refer to LEAF Electric Vehicle Information System Owner's Manual.**
- **When the battery power level is low, the system automatically obtains charging station information.**

SECURITY SYSTEMS

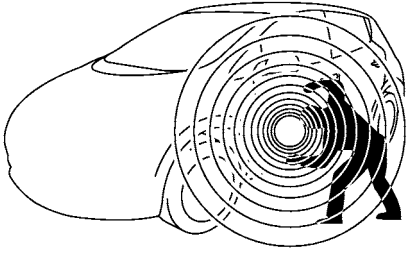

Your vehicle has two types of security systems, as follows:

- Vehicle security system
- NISSAN Vehicle Immobilizer System

The security status is shown by the security indicator light.

VEHICLE SECURITY SYSTEM

The vehicle security system provides visual and audio alarm signals if someone opens the doors, or rear hatch when the system is armed. It is not, however, a motion detection type system that activates when a vehicle is moved or when a vibration occurs.

The system helps deter vehicle theft but cannot prevent it, nor can it prevent the theft of interior or exterior vehicle components in all situations. Always secure your vehicle even if parking for a brief period. Never leave your keys in the vehicle, and always lock it when it is left unattended. Be aware of your surroundings, and park in secure, well-lit areas whenever possible.

Many devices offering additional protection, such as component locks, identification markers, and tracking systems, are available at auto supply stores and specialty shops. A NISSAN certified LEAF dealer may also offer such equipment. Check with your insurance company to see if you may be eligible for discounts for various theft protection features.

How to arm the vehicle security system

1. Close all windows.

   The system can be armed even if the windows are open.
2. Place the power switch in the LOCK or OFF position and remove the Intelligent Key from the vehicle.
3. Close all doors. Lock all doors. The doors can be locked with:
   - the LOCK 🔒 button on the Intelligent Key
   - any request switch
   - the power door lock switch
   - the mechanical key
4. Confirm that the security indicator light illuminates. The security indicator light stays on for about 30 seconds. The vehicle security system is now pre-armed. After about 30 seconds the vehicle security system automatically shifts into the armed phase. The security light begins to flash once every approximately 3 seconds. If, during this 30-second pre-arm time period, the door is unlocked, or

the power switch is placed in the ACC or ON position, the system will not arm.

Even when the driver and/or passengers are in the vehicle, the system will activate with all doors locked and the power switch in the OFF position. When placing the power switch to the ACC or ON position, the system will be released.

Vehicle security system activation

The vehicle security system will give the following alarm:

- The headlights blink and the horn sounds intermittently.
- The alarm automatically turns off after approximately 50 seconds. However, the alarm reactivates if the vehicle is tampered with again.

The alarm is activated by:

- Unlocking the door without using the Intelligent Key, the request switch or the key. (Even if the door is opened by releasing the door inside lock knob, the alarm will activate.)
- Opening the hood.

How to stop an activated alarm

The alarm will stop when a door is unlocked by pushing the UNLOCK button on the Intelligent Key, door handle request switch or using the mechanical key, or when the power switch is pushed in the ACC or ON position.

If the system does not operate as described above, have it checked. It is recommended that you visit a NISSAN certified LEAF dealer for this service.

NISSAN VEHICLE IMMOBILIZER SYSTEM

The NISSAN Vehicle Immobilizer System will not allow the power switch to be placed in the READY to drive position without the use of the registered key.

If the power switch fails to place the vehicle into the READY to drive position using the registered key, it may be due to interference caused by another registered key, an automated toll road device or automated payment device on the key ring. Restart the EV system using the following procedure:

1. Leave the power switch in the ON position for approximately 5 seconds.
2. Place the power switch in the OFF position and wait approximately 10 seconds.
3. Repeat step 1 and 2 again.
4. Place the power switch in the READY to drive position while holding the device (which may have caused the interference) separate from the registered key.

   If this procedure allows the power switch to be placed in the READY to drive mode, NISSAN recommends placing the registered key on a separate key ring to avoid interference from other devices.

FCC Notice:

For USA:

This device complies with Part 15 of the FCC Rules. Operation is subject to the following two conditions: (1) This device may not cause harmful interference, and (2) this device must accept any interference received, including interference that may cause undesired operation.

NOTE:
Changes or modifications not expressly approved by the party responsible for compliance could void the user's authority to operate the equipment.

For Canada:

This device complies with Industry Canada licence-exempt RSS standard(s). Operation is subject to the following two conditions: (1) this device may not cause interference, and (2) this device must accept any interference, including interference that may cause undesired operation of the device.

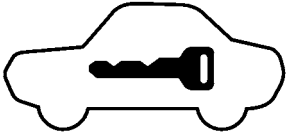

Security Indicator Light

The security indicator light is located on the meter panel. It indicates the status of the NISSAN Vehicle Immobilizer System.

The light blinks after the power switch was in the ACC or OFF position. This function indicates the security systems equipped on the vehicle are operational.

If the NISSAN Vehicle Immobilizer System is malfunctioning, this light will remain on while the power switch is in the ON position.

If the light still remains on and/or the power switch cannot be placed in the READY to drive position, have the system checked. It is recommended that you visit a NISSAN certified LEAF dealer for this service as soon as possible. Please bring all registered keys that you have when visiting a NISSAN certified LEAF dealer for service.

WIPER AND WASHER SWITCH

WARNING

In freezing temperatures the washer solution may freeze on the windshield and obscure your vision which may lead to an accident. Warm the windshield with the defroster before you wash the windshield.

CAUTION

- **Do not operate the washer continuously for more than 30 seconds.**
- **Do not operate the washer if the windshield-washer fluid reservoir is empty.**
- **Do not fill the windshield-washer fluid reservoir with windshield-washer fluid concentrates at full strength. Some methyl alcohol based windshield-washer fluid concentrates may permanently stain the grille if spilled while filling the windshield-washer fluid reservoir.**
- **Pre-mix windshield-washer fluid concentrates with water to the manufacturer's recommended levels before pouring the fluid into the windshield-washer fluid reservoir. Do not use the windshield-washer fluid reservoir to mix the windshield-washer fluid concentrate and water.**

NOTE:
If the windshield wiper operation is interrupted by snow or ice, the wiper may stop moving to protect its motor. If this occurs, turn the wiper switch to the OFF position and remove the snow or ice that is on and around the wiper arms. In approximately 1 minute, turn the switch on again to operate the wiper.

The windshield wiper and washer operates when the power switch is in the ON position.

Push the lever down to operate the wiper at the following speed:

① Intermittent — intermittent operation can be adjusted by turning the knob toward Ⓐ (Slower) or Ⓑ (Faster). Also, the intermittent operation speed varies in accordance with the vehicle speed. (For example, when the vehicle speed is high, the intermittent operation speed will be faster.)

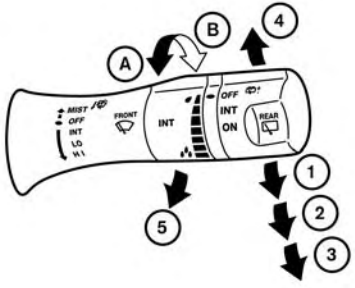

② Low — continuous low speed operation.
③ High — continuous high speed operation.
④ MIST — one sweep operation of the wiper .

The Speed Dependent feature may be disabled. For additional information, refer to "Vehicle information display" in this section.

WASHER OPERATION

To operate the washer, pull the lever toward the back of the vehicle ⑤ until the desired amount of windshield-washer fluid is spread on the windshield. The wiper will automatically operate several times.

Drip Wipe

A brief period of time after using the washer the wiper will perform a one sweep operation automatically to clear any remaining windshield-washer fluid from the windshield.

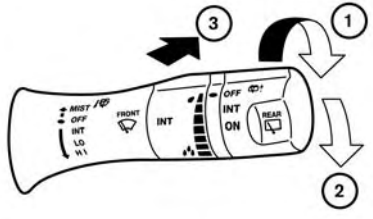

REAR WIPER OPERATION

WARNING

In freezing temperatures the windshield-washer fluid may freeze on the rear window glass and obscure your vision. Warm the rear window with the defroster before you wash the rear window.

CAUTION

- **Do not operate the washer continuously for more than 30 seconds.**
- **Do not operate the washer if the windshield-washer fluid reservoir is empty.**
- **Do not fill the windshield-washer fluid reservoir with windshield-washer fluid concentrates at full strength. Some methyl alcohol based windshield-washer fluid concentrates may permanently stain the grille if spilled while filling the windshield-washer fluid reservoir.**
- **Pre-mix windshield-washer fluid concentrates with water to the manufacturer's recommended levels before pouring the fluid into the windshield-washer fluid reservoir. Do not use the windshield-washer fluid reservoir to mix the windshield-washer fluid concentrate and water.**

NOTE:

If the rear window wiper operation is interrupted by snow etc., the wiper may stop moving to protect its motor. If this occurs, turn the wiper switch to the OFF position and remove the snow etc. on and around the wiper arms. After about 1 minute, turn the switch on again to operate the wiper.

The rear window wiper and washer operate when the power switch is in the ON position.

Turn the switch clockwise from the OFF position to operate the wiper.

① Intermittent (INT) — intermittent operation (not adjustable)

② Low (ON) — continuous low speed operation

Push the switch forward ③ to operate the washer. Then the wiper will also operate several times.

REAR WINDOW AND OUTSIDE MIRROR (IF SO EQUIPPED) DEFROSTER SWITCH

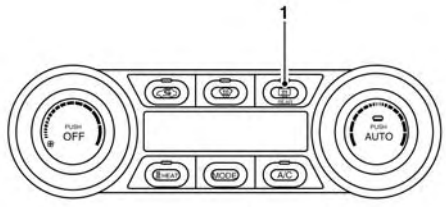

Type A (if so equipped)

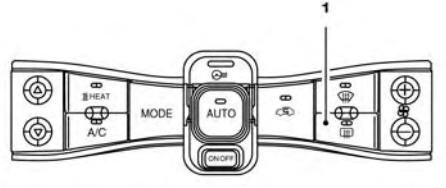

Type B (if so equipped)

To defrost the rear window glass and outside mirrors, place the power switch in the ON position and push the switch ① on. The indicator light will illuminate. Push the switch again to turn the defroster off.

It will automatically turn off in approximately 15 minutes.

CAUTION

When cleaning the inner side of the rear window, be careful not to scratch or damage the rear window defroster.

HEADLIGHT AND TURN SIGNAL SWITCH

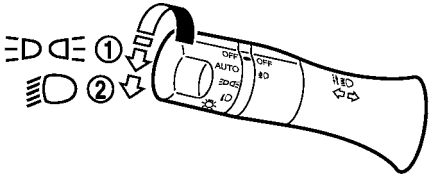

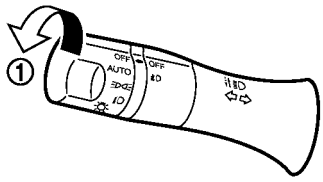

HEADLIGHT SWITCH

Lighting

① Rotate the switch to the position, the front parking, tail, license plate, and instrument panel lights come on.

② Rotate the switch to the position, the headlights come on and all the other lights remain on.

Autolight system (if so equipped)

The autolight system allows the headlights and tail lights to be set so they turn on and off automatically.

To set the autolight system:

1. Make sure the headlight switch is in the AUTO position ①.
2. Place the power switch in the ON position.
3. The autolight system automatically turns the headlights and tail lights on and off.

To turn the autolight system off, turn the switch to the OFF, or position.

The autolight system can turn on the headlights and tail lights automatically when it is dark and turn off the headlights when it is light.

For US models: The headlights and tail lights will also be turned on automatically at twilight or in rainy weather (when the windshield wiper is operated continuously).

If the power switch is placed in the OFF position and one of the doors is opened and this condition continues, the headlights remain on for 45 seconds.

Automatic headlights off delay:

You can keep the headlights on for up to 180 seconds after you push the power switch to OFF and open any door then close all the doors.

You can adjust the period of the automatic headlights off delay from 0 seconds (OFF) to 180 seconds. The factory default setting is 45 seconds.

NOTE:
For additional information on adjusting the automatic headlights off delay, refer to "Vehicle information display" in this section.

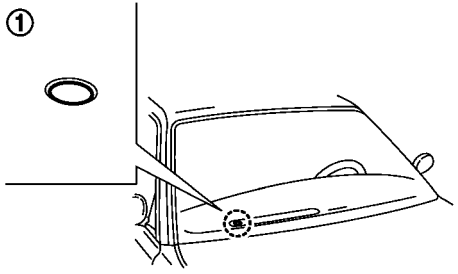

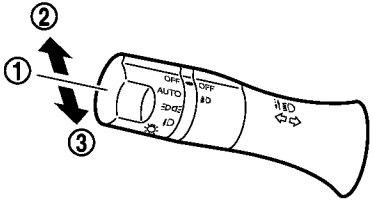

Be sure not to put anything on top of the photo sensor ① located on the top of the instrument panel. The photo sensor controls the autolight; if it is covered, the photo sensor reacts as if it is dark and the headlights will illuminate.

Headlight beam select

① To select the low beam, have the lever in the neutral position as shown and rotate the switch to the desired position. For additional information, refer to "Headlight switch" in this section.

② To select the high beam, push the lever forward while the switch is in the position. The high beams will come on and the high beam indicator (blue) will illuminate. Pull it back to return to the low beam.

③ Pulling the lever toward you will flash the headlight high beam even when the headlight switch is in the OFF position.

High Beam Assist (if so equipped)

The High Beam Assist system will operate when the vehicle is driven at speeds of approximately 19 mph (30 km/h) and above. If an oncoming vehicle or leading vehicle appears in front of your vehicle when the headlight high beam is on, the headlight will be switched to the low beam automatically.

Precautions on High Beam Assist:

WARNING

- **The High Beam Assist system is a convenience but it is not a substitute for safe driving operation. The driver should remain alert at all times, ensure safe driving practices and switch the high beams and low beam manually when necessary.**
- **The high beam or low beam may not switch automatically under the following conditions. Switch the high beam and low beam manually.**
  - **During bad weather (rain, fog, snow, wind, etc.).**
  - **When a light source similar to a headlight or tail light is in the vicinity of the vehicle.**
  - **When the headlights of the oncoming vehicle or the leading vehicle are turned off, when the color of the light is affected due to foreign materials on the lights, or when the light beam is out of position.**
  - **When there is a sudden, continuous change in brightness.**
  - **When driving on a road that passes over rolling hills, or a road that has level differences.**
  - **When driving on a road with many curves.**
  - **When a sign or mirror-like surface is reflecting intense light towards the front of the vehicle.**
  - **When the container, etc. being towed by a leading vehicle is reflecting intense light.**
  - **When a headlight on your vehicle is damaged or dirty.**
  - **When the vehicle is leaning at an angle due to a punctured tire, being towed, etc.**
- **The timing of switching the low beam and high beam may change under the following situations.**
  - **The brightness of the headlights of the oncoming vehicle or leading vehicle.**
  - **The movement and direction of the oncoming vehicle and the leading vehicle.**
  - **When only one light on the on coming vehicle or the leading vehicle is illuminated.**
  - **When the oncoming vehicle or the leading vehicle is a two-wheeled vehicle.**
  - **Road conditions (incline, curve, the road surface, etc.).**
  - **The number of passengers and the amount of luggage.**

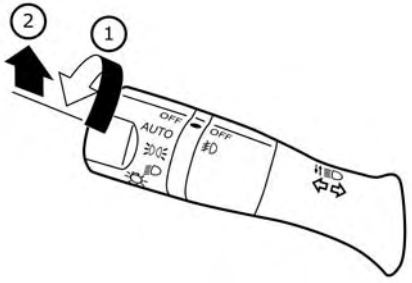

High Beam Assist operations:

To activate the High Beam Assist system, turn the headlight switch to the AUTO position ① and push the lever forward ② (high beam position). The High Beam Assist indicator light in the meter will illuminate while the headlights are turned on.

If the High Beam Assist indicator light does not illuminate in the above condition, it may indicate that the system is not functioning properly. It is recommended that you visit a NISSAN certified LEAF dealer for this service.

When the vehicle speed lowers to less than approximately 12 mph (20 km/h), the headlight remains the low beam.

To turn off the High Beam Assist system, turn the headlight switch to the position or select the low beam position by placing the lever in the neutral position.

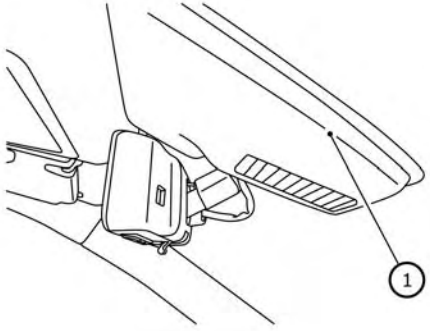

Ambient image sensor maintenance:

The ambient image sensor for the High Beam Assist system is located above the inside mirror ①. To keep the proper operation of the High Beam Assist system and prevent a system malfunction, be sure to observe the following:

- Always keep the windshield clean.
- Do not attach a sticker (including transparent material) or install an accessory near the ambient image sensor.
- Do not strike or damage the areas around the ambient image sensor.

If the ambient image sensor is damaged due to an accident, it is recommended that you visit a NISSAN certified LEAF dealer for this service.

Battery saver system

- When the headlight switch is in the ≡DC≡ or ≡D position while the power switch is in the ON position, the lights will automatically turn off 45 seconds after the power switch has been placed in the OFF position.
- When the headlight switch remains in the ≡DC≡ or ≡D position after the lights automatically turn off, the lights will turn on when the power switch is placed in the ON position.

CAUTION

- **When you turn on the headlight switch again after the lights automatically turn off, the lights will not turn off automatically. Be sure to turn the light switch to the OFF position when you leave the vehicle for extended periods of time, otherwise the battery will be discharged.**
- **Never leave the light switch on when the power switch is in the OFF, ACC or ON position for extended periods of time even if the headlights turn off automatically.**

LED Daytime Running Lights (DRL) system (if so equipped)

The LED portion of the headlights automatically illuminates at 100% intensity when the power switch is in the Ready to Drive position with the parking brake released. The LED DRL system operates with the headlight switch in the OFF position. Turn headlight switch to the ≡D position for full illumination when driving at night.

If the parking brake is applied before the power switch is in the Ready to Drive position, the LED DRL system does not operate. The LED DRL system illuminates once the parking brake is released. The LED DRL system will remain on until the power switch is pushed to the OFF position.

WARNING

When the LED DRL system is active, tail lights on your vehicle are not on. It is necessary at dusk to turn on your headlights. Failure to do so could cause an accident injuring yourself and others.

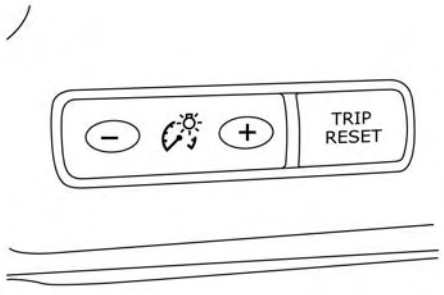

INSTRUMENT BRIGHTNESS CONTROL

Press the "+" button to increase the brightness of the instrument panel lights.

Press the "-" to decrease the brightness of the instrument panel lights.

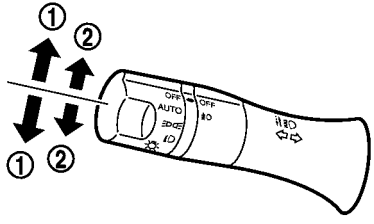

TURN SIGNAL SWITCH

Turn signal

① Move the lever up or down until it latches to signal the turning direction. When the turn is completed, the turn signal cancels automatically.

Lane change signal

② Move the lever up or down until the turn signal begins to flash, but the lever does not latch, to signal a lane change. Hold the lever until the lane change is completed.

Move the lever up or down until the turn signal begins to flash, but the lever does not latch, and release the lever. The turn signal will automatically flash three times.

Choose the appropriate method to signal a lane change based on road and traffic conditions.

FOG LIGHT SWITCH (IF SO EQUIPPED)

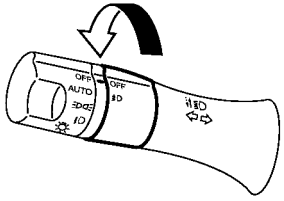

To turn the fog lights on, rotate the headlight switch to the position, then rotate the switch to the position. To turn them off, rotate the switch to the OFF position.

The headlights must be on for the fog lights to operate.

HORN

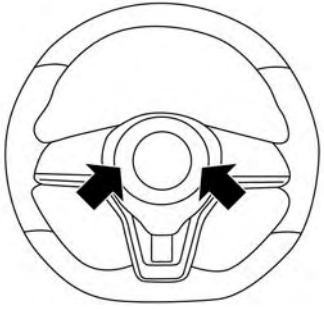

To sound the horn, push the center pad area of the steering wheel.

WARNING

Do not disassemble the horn. Doing so could affect proper operation of the supplemental front air bag system. Tampering with the supplemental front air bag system may result in serious personal injury.

ECO SWITCH

To turn on the ECO mode, push the ECO switch. The ECO mode indicator appears on the meter.

To turn off the ECO mode, push the ECO switch again. The ECO mode indicator will turn off.

For additional information, refer to "Electric shift control system" in the "Starting and driving" section of this manual

HEATED SEAT SWITCHES (IF SO EQUIPPED)

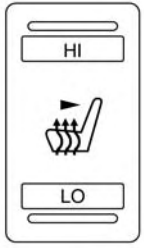

Front

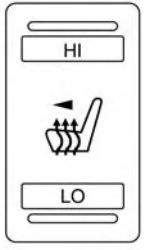

Front

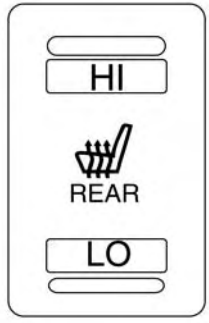

Rear

The front seats and the rear outboard seats (if so equipped) can be warmed by built-in heaters. The switches, located on the center console and at the side of the front passenger seatback, can be operated independently of each other.

1. Place the power switch in the ON position.
2. Push the LO or HI position of the switch, as desired, depending on the temperature. The indicator light in the switch will illuminate.
3. To turn off the heater, return the switch to the level position. Make sure the indicator light goes off.

The heater is controlled by a thermostat, automatically turning the heater on and off. The indicator light will remain on as long as the switch is on.

When the vehicle's interior is warmed, or before you leave the vehicle, be sure to turn the switch off.

NOTE:
The heated seats consume less power than the heater and can be used to either help extend vehicle range by reducing heater use or to maximize comfort by supplementing the heater.

WARNING

Do not use or allow occupants to use the seat heater if you or the occupants cannot monitor elevated seat temperatures or have an inability to feel pain in those body parts in contact with the seat. Use of the seat heater by such people could result in serious injury.

CAUTION

- **Do not use the seat heater for extended periods or when no one is using the seat.**
- **Do not put anything on the seat which insulates heat, such as a blanket, cushion, seat cover, etc. Otherwise, the seat may become overheated.**
- **Do not place anything hard or heavy on the seat or pierce it with a pin or similar object. This may result in damage to the heater.**
- **Any liquid spilled on the heated seat should be removed immediately with a dry cloth.**
- **When cleaning the seat, never use gasoline, thinner, or any similar materials.**
- **If any malfunctions are found or the heated seat does not operate, turn the switch off and have the system checked. It is recommended that you visit a NISSAN certified LEAF dealer for this service.**

HEATED STEERING WHEEL SWITCH (IF SO EQUIPPED)

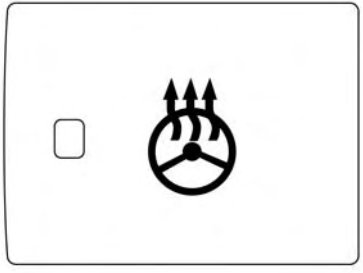

The heated steering wheel system is designed to operate only when the surface temperature of the steering wheel is below approximately 68°F (20°C).

Push the heated steering wheel switch to warm the steering wheel when the power switch is in the ACC or ON position. The indicator light ① on the switch will illuminate.

If the surface temperature of the steering wheel is below approximately 68°F (20°C), the system will heat the steering wheel and cycle off and on to maintain a temperature above 68°F (20°C). The indicator light will remain on as long as the system is on.

Push the switch again to turn the heated steering wheel system off manually. The indicator light turns off.

NOTE:

- **If the surface temperature of the steering wheel is above 68°F (20°C) when the switch is turned on, the system will not heat the steering wheel. This is not a malfunction.**
- **If the outside temperature is low (approximately 50°F (10°C) or less) and the Climate Control Timer or Remote Climate Control are used, the steering wheel heater will automatically operate in the following conditions.**
  - **When using the Climate Control Timer: Operates from approximately 15 minutes before the set departure time until the set departure time.**
  - **When using Remote Climate Control: Operates 15 minutes after Remote Climate Control starts.**
- **The heated steering wheel consumes less power than the heater and can be used to either help extend vehicle range by reducing heater use or to maximize comfort by supplementing the heater.**

E-CALL (SOS) SWITCH (IF SO EQUIPPED)

The E-call (SOS) system switch is used in combination with a NissanConnect® (for Leaf) Services subscription to call for assistance in case of an emergency.

Pushing the switch will (with a paid subscription) reach a Response Specialist that will provide assistance based on the situation described by the vehicle's occupant. For additional information, or to enroll your vehicle, refer to www.NissanUSA.com/connect or call 855-426-6628.

CHARGE PORT LID SWITCH

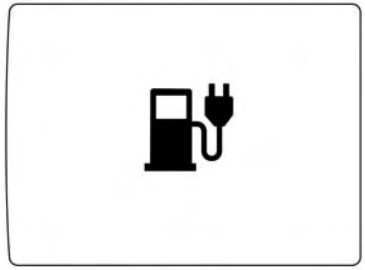

To open the charge port lid, push the charge port lid switch. For additional information, refer to "Charge port lid" in the "Pre-driving checks and adjustments" section of this manual.

CHARGE TIMER OFF SWITCH

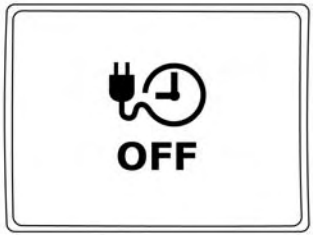

To turn off the charge timer, push the charge timer OFF switch. For additional information, refer to "Charging timer" in the "Charging" section of this manual.

STEERING ASSIST SWITCH (IF SO EQUIPPED)

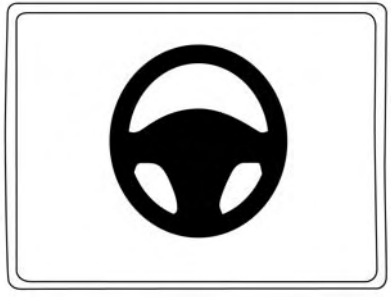

The Steering Assist switch is used to turn on and off the Steering Assist system and the Intelligent Cruise Control (ICC) system that is activated using the settings menu of the vehicle information display.

The Steering Assist system controls the steering system to help keep your vehicle near the center of the lane when driving. The Steering Assist system is combined with the Intelligent Cruise Control (ICC). For additional information, refer to "Intelligent Cruise Control (ICC) with ProPILOT™ Assist)" in the "Starting and driving" section of this manual.

POWER OUTLET

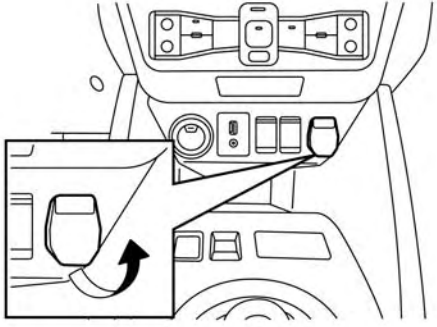

CAUTION

- **The outlet and plug may be hot during or immediately after use.**
- **Do not use with accessories that exceed a 12-volt, 120W (10A) power draw.**
- **Do not use double adapters or more than one electrical accessory.**
- **Use the power outlet with the power switch is in the ON or Ready to Drive position to avoid discharging the 12-volt battery.**

- **Avoid using the power outlet when the air conditioner, headlights or rear window defroster are on.**
- **This power outlet is not designed for use with a cigarette lighter unit.**
- **Push the plug in as far as it will go. If good contact is not made, the plug may overheat or the internal temperature fuse may open.**
- **Before inserting or disconnecting a plug, make sure that the electrical accessory being used is turned OFF.**
- **When not in use, be sure to close the cap. Do not allow water to contact the outlet.**

STORAGE

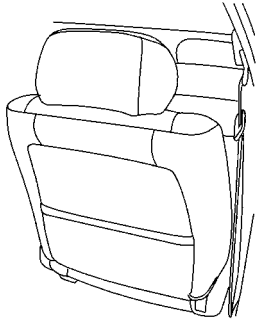

SEATBACK POCKET (IF SO EQUIPPED)

The seatback pockets may be located on the driver's and/or passenger's seat.. The pocket can be used to store maps.

WARNING

To ensure proper operation of the passenger's NISSAN Advanced Air Bag System, please observe the following items:

- **Do not allow a passenger in the rear seat to push or pull on the seatback pocket or head restraint.**
- **Do not place heavy loads heavier than 9.1 lbs. (4 kg) on the seatback, head restraint, or in the seatback pocket.**

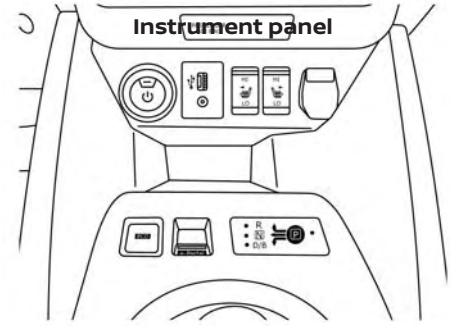

STORAGE TRAY

WARNING

Do not place sharp objects in the tray(s) to help prevent injury in an accident or sudden stop.

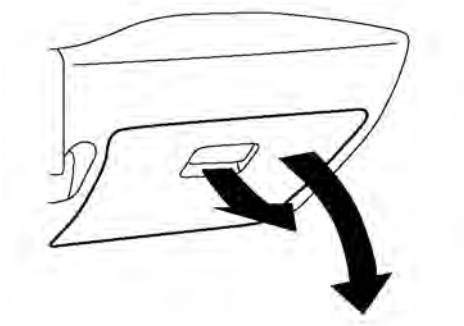

GLOVE BOX

To open the glove box, pull the handle.

To close, push the lid in until it latches.

WARNING

Keep the glove box lid closed while driving to prevent injury in case of an accident or a sudden stop.

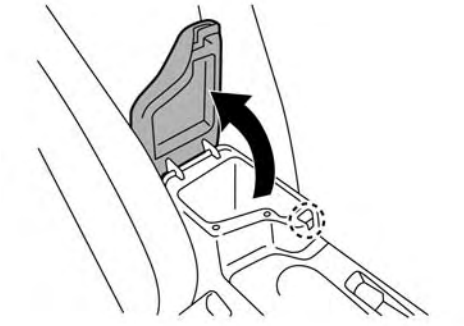

CONSOLE BOX

To open the console box, pull up the lever Ⓐ and pull up the lid. To close, push the lid down until it is latched.

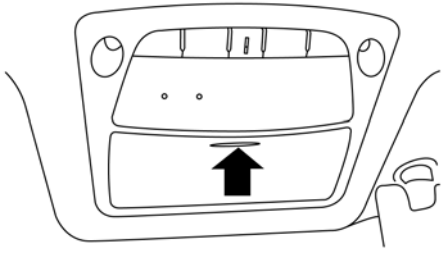

OVERHEAD SUNGLASSES STORAGE

To open the sunglasses holder, push and release. Only store one pair of sunglasses in the holder.

WARNING

Keep the sunglasses holder closed while driving to avoid obstructing the driver's view and to help prevent an accident.

CAUTION

- **Do not use for anything other than sunglasses.**
- **Do not leave sunglasses in the sunglasses holder while parking in direct sunlight. The heat may damage the sunglasses.**

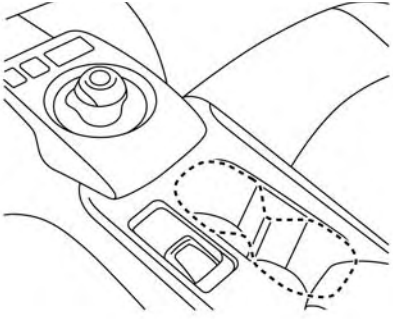

Front

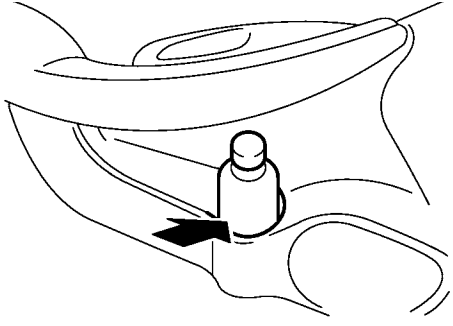

Soft bottle holder (front)

Cup holders

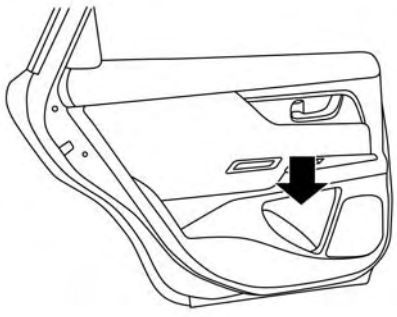

Soft bottle holder (rear)

WARNING

Avoid abrupt starting and braking when the cup holder is being used to prevent spilling the drink. If the liquid is hot, it can scald you or your passenger.

CAUTION

Use only soft cups in the cup holder. Hard objects can injure you in an accident.

CAUTION

- **Do not use the bottle holder for any other objects that could be thrown about in the vehicle and possibly injure people during sudden braking or an accident.**
- **Do not use the bottle holder for open liquid containers.**

TONNEAU COVER (IF SO EQUIPPED)

WARNING

- **Never put anything on the tonneau cover, no matter how small. Any object on it could cause an injury in an accident or sudden stop.**
- **Do not leave the tonneau cover in the vehicle with it disengaged from the holder.**
- **Properly secure all cargo with ropes or straps to help prevent it from sliding or shifting. Do not place cargo higher than the seatbacks. In a sudden stop or collision, unsecured cargo could cause personal injury.**
- **Properly secure cargo and do not allow it to contact the top tether strap when it is attached to the top tether anchor. Cargo that is not properly secured or cargo that contacts the top tether strap may damage the top tether strap during a collision. If the cargo cover contacts the top tether strap when it is attached to the top tether anchor, remove the**

cargo cover from the vehicle or secure it on the cargo floor below its attachment location. If the cargo cover is not removed, it may damage the top tether strap during a collision. Your child could be seriously injured or killed in a collision if the child restraint top tether strap is damaged.

The tonneau cover keeps the luggage compartment contents hidden from the outside.

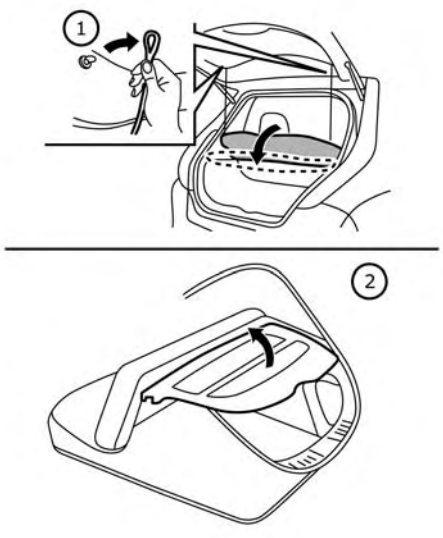

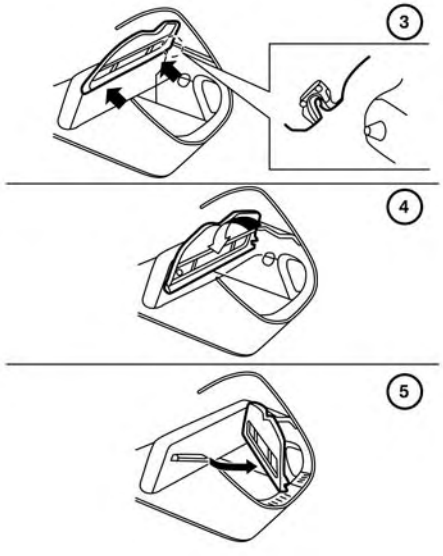

To remove the tonneau cover:

1. Remove the straps from the rear hatch.
2. Pull up the tonneau cover.
3. Remove the tonneau cover holders from the rear pillar.
4. Slide down the tonneau cover along the rear seat back.
5. Remove the tonneau cover by pulling either the left or right side backward away from the pillar.

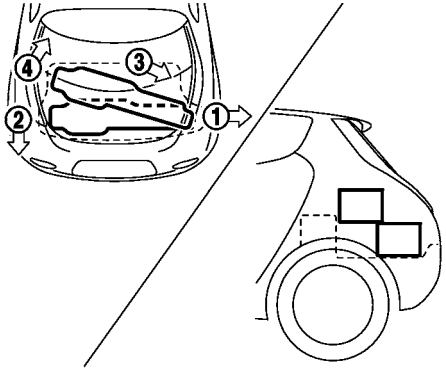

STOWING GOLF BAGS

Normally, two standard golf bags can be stowed in the cargo area. Insert the top of the golf bag into the right side of the cargo area ① then rotate the bag backward ②. Insert the top of the second golf bag into right side of the cargo area ③ and stow the bottom of golf bag forward all the way ④.

In some cases, you may not be able to stow two golf bags in your vehicle, depending on their sizes or types.

WINDOWS

POWER WINDOWS

WARNING

- **Make sure that all passengers have their hands, etc. inside the vehicle while it is in motion and before closing the windows. Use the window lock switch to prevent unexpected use of the power windows.**
- **To help avoid risk of injury or death through unintended operation of the vehicle or its systems, including entrapment in windows or inadvertent door lock activation, do not leave children, people who require the assistance of others, or pets unattended in your vehicle. Additionally, the temperature inside a closed vehicle on a warm day can quickly become high enough to cause a significant risk of injury or death to people and pets.**

The power windows operate when the power switch is in the ACC or ON position, or for about 45 seconds after the power switch is placed in the OFF position. If the driver's or front passenger's door is opened during this period of about 45 seconds, power to the windows is canceled.

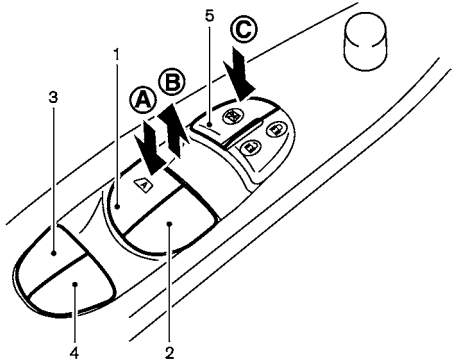

Main power window switch (driver's side)

1. Driver side window
2. Front passenger side window
3. Rear left passenger side window
4. Rear right passenger side window
5. Window lock button

To open or close a window, push down Ⓐ or pull up Ⓑ the corresponding switch and hold it. The main switches, on the driver's side, will open or close all the windows.

Locking passengers' windows

When the lock button Ⓒ is pushed in, only the driver side window can be opened or closed. Push it in again to cancel.

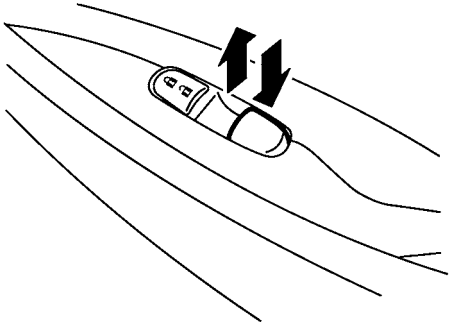

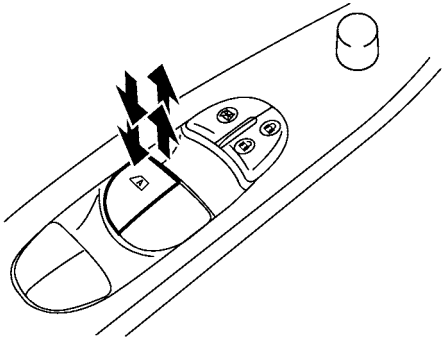

Passenger side power window switch

The passenger's side power window switch will open or close only the corresponding window. To open or close the window, push down or pull up the switch and hold it.

Rear power window switch

The rear power window switches open or close only the corresponding windows. To open the window, push the switch and hold it down. To close the window, pull the switch up.

Automatic operation

The automatic operation is available for the switch that has an A mark on its surface.

To fully open or close the window, completely push down or pull up the switch and release it; the switch need not be held. The window will automatically open or close all the way. To stop the window, just push or lift the switch in the opposite direction.

A light push or pull on the switch will cause the window to open or close until the switch is released.

Auto-reverse function

WARNING

There are some small distances immediately before the closed position which cannot be detected. Make sure that all passengers have their hands, etc., inside the vehicle before closing the window.

If the control unit detects something caught in the window as it is closing, the window will be immediately lowered.

The auto reverse function can be activated when the window is closed by automatic operation when the power switch is in the ON position or for 45 seconds after the power switch is placed in the OFF position.

Depending on the environment or driving conditions, the auto reverse function may be activated if an impact or load similar to something being caught in the window occurs.

If the windows do not close automatically

If the power window automatic function (closing only) does not operate properly, perform the following procedure to initialize the power window system.

1. Place the power switch in the ON position.
2. Close the door.
3. Open the window completely by operating the power window switch.
4. Pull the power window switch and hold it to close the window, and then hold the switch more than 3 seconds after the window is closed completely.
5. Release the power window switch. Operate the window by the automatic function to confirm the initialization is complete.

If the power window automatic function does not operate properly after performing the procedure above, have your vehicle serviced. It is recommended that you visit a NISSAN certified LEAF dealer for this service.

INTERIOR LIGHTS

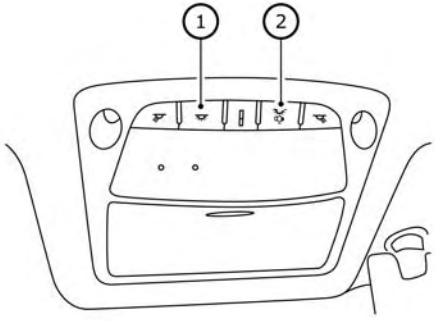

The interior lights can be turned on ① regardless of door position. The lights will go off after a period of time unless the power switch is placed in the ON position when any door is opened.

The interior lights can be set to operate when the doors are opened ②. To turn off the interior lights when a is door open, push the switch; the interior lights will not illuminate, regardless of door position.

The lights will go off when the power switch is placed in the ON position, or the driver's door is closed and locked. The lights will also go off after a period of time when the doors are open.

CAUTION

Do not use for extended periods of time with the power switch in the OFF position. This could result in a discharged 12-volt battery.

CONSOLE LIGHT (IF SO EQUIPPED)

The console light will turn on whenever the parking lights or headlights are illuminated.

The console light brightness can be adjusted with the illumination brightness control in the vehicle information display.

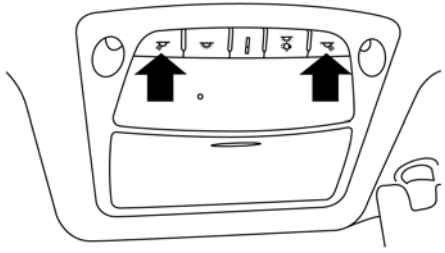

MAP LIGHTS

Press the button to turn the map lights on. To turn them off, press the button again.

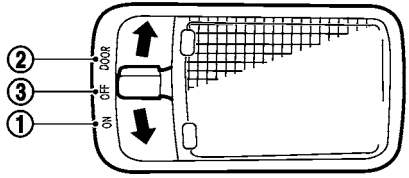

ROOM LIGHT

The room light switch has three positions: ON, DOOR and OFF.

ON position

When the switch is in the ON position ①, the ceiling light will illuminate.

DOOR position

When the switch is in the DOOR position ②, the ceiling light will illuminate under the following conditions:

- the power switch is placed in the LOCK position
  - remains on for about 15 seconds.
- doors are unlocked by pushing the UNLOCK button or the request switch, with the power switch in the LOCK position
  - remains on for about 15 seconds.
- any door is opened and then closed with the power switch in the LOCK position
  - remains on for about 15 seconds.
- any door is opened while the power switch in the ACC or ON position
  - remains on while the door is opened. When the door is closed, the light turns off.

The light will automatically turn off after 10 minutes when the light remains illuminated to prevent the battery from becoming discharged.

OFF position

When the switch is in the OFF position ③, the ceiling light will not illuminate, regardless of the condition.

CARGO LIGHT

The light illuminates when the rear hatch is opened. When the rear hatch is closed, the light goes off. For additional information, refer to "Exterior and interior lights" in the "Maintenance and do-it-yourself" section of this manual.

HOMELINK® UNIVERSAL TRANSCEIVER (IF SO EQUIPPED)

The HomeLink® Universal Transceiver provides a convenient way to consolidate the functions of up to three individual hand-held transmitters into one built-in device.

HomeLink® Universal Transceiver:

- Will operate most Radio Frequency (RF) devices such as garage doors, gates, home and office lighting, entry door locks and security systems.
- Is powered by the vehicle's 12-volt battery. No separate batteries are required. If the vehicle's 12-volt battery is discharged or is disconnected, HomeLink® will retain all programming.

Once the HomeLink® Universal Transceiver is programmed, retain the original transmitter for future programming procedures (for example, new vehicle purchases). Upon sale of the vehicle, the programmed HomeLink® Universal Transceiver buttons should be erased for security purposes. For additional information, refer to "Programming HomeLink®" in this section.

WARNING

- **Do not use the HomeLink® Universal Transceiver with any garage door opener that lacks safety stop and reverse features as required by federal safety standards. (These standards became effective for opener models manufactured after April 1, 1982.) A garage door opener that cannot detect an object in the path of a closing garage door and then automatically stop and reverse, does not meet current federal safety standards. Using a garage door opener without these features increases the risk of serious injury or death.**
- **During the programming procedure, your garage door or security gate will open or close (if the transmitter is within range). Make sure that people or objects are clear of the garage door, gate, etc. that you are programming.**
- **Place the power switch in the ACC or ON position while programming the HomeLink® Universal Transceiver.**

PROGRAMMING HOMELINK®

If you have any questions or are having difficulty programming your HomeLink® buttons, refer to the HomeLink® web site at: www.homelink.com or call 1-800-355-3515.

NOTE:

Place the power switch in the ACC position when programming HomeLink®. It is also recommended that a new battery be placed in the hand-held transmitter of the device being programmed to HomeLink® for quicker programming and accurate transmission of the radio-frequency.

1. Position the end of your hand-held transmitter 1–3 inches (2–8 cm) away from the HomeLink® surface, keeping the HomeLink® indicator light ① in view.

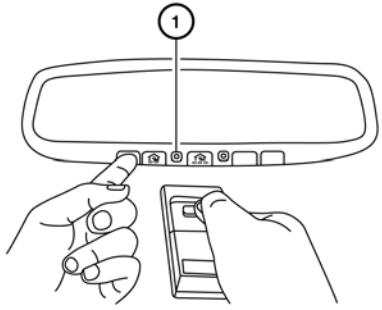

2. Using both hands, simultaneously press and hold the desired HomeLink® button and handheld transmitter button. DO NOT release until the HomeLink® indicator light ① flashes slowly and then rapidly. When the indicator light flashes rapidly, both buttons may be released. (The rapid flashing indicates successful programming.)

NOTE:
Some devices may require you to replace Step 2 with the cycling procedure noted in the "Programming HomeLink® for Canadian customers and gate openers" section.

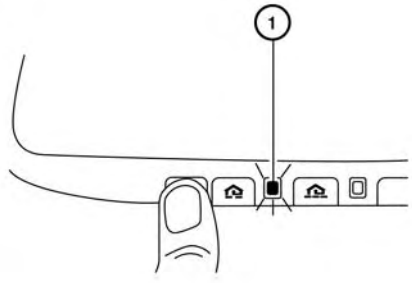

3. Press and hold the programmed HomeLink® button and observe the indicator light.
   - If the indicator light ① **is solid/continuous, programming is complete** and your device should activate when the HomeLink® button is pressed and released.
   - If the indicator light ① blinks **rapidly for two seconds and then turns to a solid/continuous light, continue with Steps 4-6** for a rolling code device. A second person may make the following steps easier. Please use a ladder or other device. Do not stand on your vehicle to perform the next steps.
4. At the receiver located on the garage door opener motor in the garage, locate the "learn" or "smart" button (the name and color of the button may vary by manufacturer but it is usually located near where the hanging antenna wire is attached to the unit). If there is difficulty locating the button, reference the garage door opener's manual.
5. Press and release the "learn" or "smart" button.
6. Return to the vehicle and firmly press and hold the trained HomeLink® button for two seconds and release. Repeat the "press/hold/release" sequence up to three times to complete the training process. HomeLink® should now activate your rolling code equipped device.
7. If you have any questions or are having difficulty programming your HomeLink® buttons, refer to the HomeLink® web site at: www.homelink.com or call 1-800-355-3515.

PROGRAMMING HOMELINK® FOR CANADIAN CUSTOMERS AND GATE OPENERS

Canadian radio-frequency laws require transmitter signals to "time-out" (or quit) after several seconds of transmission – which may not be long enough for HomeLink® to pick up the signal during training. Similar to this Canadian law, some U.S. gate operators are designed to "time-out" in the same manner.

If you live in Canada or you are having difficulties training a gate operator or garage door opener by using the "Training" procedures, replace "Programming HomeLink®" **Step 2** with the following:

NOTE:
When programming a garage door opener, etc., unplug the device during the "cycling" process to prevent possible damage to the garage door opener components.

1. Refer to "Programming HomeLink®" step 1 in this section.
2. Using both hands, simultaneously press and hold the desired HomeLink® button and the hand-held transmitter button. During training, your hand-held transmitter may automatically stop transmitting. Continue to press and hold the desired HomeLink® button while you press and re-press ("cycle") your hand-held transmitter every two seconds until the frequency signal has been learned. The HomeLink® indicator light will flash slowly and then rapidly after several seconds upon successful training. DO NOT release until the HomeLink® indicator light flashes slowly and then rapidly. When the indicator light flashes rapidly, both buttons may be released. The rapid flashing indicates successful training.

Proceed with "Programming HomeLink®" step 3 to complete.

If the device was unplugged during the programming procedure, remember to plug it back in when programming is completed.

OPERATING THE HOMELINK® UNIVERSAL TRANSCEIVER

The HomeLink® Universal Transceiver, after it is programmed, can be used to activate the programmed device. To operate, simply press and release the appropriate programmed HomeLink® Universal Transceiver button. The amber indicator light will illuminate while the signal is being transmitted.

For convenience, the hand-held transmitter of the device may also be used at any time.

PROGRAMMING TROUBLE-DIAGNOSIS

If HomeLink® does not quickly learn the hand-held transmitter information, perform the following steps.

- Replace the hand-held transmitter batteries with new batteries.
- Position the hand-held transmitter with its battery area facing away from the HomeLink® surface.
- Push and hold both the HomeLink® and hand-held transmitter buttons without interruption.
- Position the hand-held transmitter 1 to 3 inches (2 to 8 cm) away from the HomeLink® surface. Hold the transmitter in that position for up to 15 seconds. If

HomeLink® is not programmed within that time, try holding the transmitter in another position while keeping the indicator light in view at all times.

If you continue to have programming difficulties, please contact the NISSAN Consumer Affairs Department. The phone numbers are located in the Foreword of this Owner's Manual.

CLEARING THE PROGRAMMED INFORMATION

The following procedure clears the programmed information from both buttons. Individual buttons cannot be cleared. However, individual buttons can be reprogrammed. For additional information, refer to "Reprogramming a single HomeLink® button" in this section.

To clear all programming:

1. Press and hold the two outer HomeLink® buttons until the indicator light begins to flash in approximately 10 seconds. Do not hold for longer than 20 seconds.
2. Release both buttons.

HomeLink® is now in the programming mode and can be programmed at any time beginning with "Programming HomeLink®" - Step 1.

REPROGRAMMING A SINGLE HOMELINK® BUTTON

To reprogram a HomeLink® Universal Transceiver button, complete the following:

1. Press and hold the desired HomeLink® button. **DO NOT** release the button.
2. The indicator light will begin to flash after 20 seconds. Without releasing the HomeLink® button, proceed with "Programming HomeLink®" - Step 1.

For questions or comments, contact HomeLink® at: www.homelink.com or 1–800–355–3515.

The HomeLink® Universal Transceiver button has now been reprogrammed. The new device can be activated by pushing the HomeLink® button that was just programmed. This procedure will not affect any other programmed HomeLink® buttons.

IF YOUR VEHICLE IS STOLEN

If your vehicle is stolen, you should change the codes of any non-rolling code device that has been programmed into HomeLink®. Consult the Owner's Manual of each device or call the manufacturer or dealer of those devices for additional information.

When your vehicle is recovered, you will need to reprogram the HomeLink® Universal Transceiver with your new transmitter information.

FCC notice:

For USA:

This device complies with Part 15 of the FCC Rules. Operation is subject to the following two conditions: (1) This device may not cause harmful interference, and (2) this device must accept any interference received, including interference that may cause undesired operation.

NOTE:
Changes or modifications not expressly approved by the party responsible for compliance could void the user's authority to operate the equipment.

For Canada:

This device complies with Industry Canada licence-exempt RSS standard(s). Operation is subject to the following two conditions: (1) this device may not cause interference, and (2) this device must accept any interference, including interference that may cause undesired operation of the device.

NOTES

3 Pre-driving checks and adjustments

Keys 3-2
NISSAN Intelligent Key® 3-2
NISSAN Vehicle Immobilizer System keys . . . 3-3
Doors 3-4
Locking with key (driver's side only) 3-5
Locking with inside lock knob. 3-5
Locking with power door lock switch. 3-5
Automatic door locks 3-6
Child safety rear door lock 3-6
NISSAN Intelligent Key® system. 3-6
NISSAN Intelligent Key® operating range of the door lock/unlock function 3-8
Door locks/unlocks precaution. 3-9
NISSAN Intelligent Key® operation 3-9
12-volt battery saver system 3-11
Warning signals 3-11
Troubleshooting guide 3-11
How to use remote keyless entry function. . . 3-13
Hood 3-16
Rear hatch. 3-17
Secondary rear hatch release 3-18
Charge port lid 3-19
Opening charge port lid 3-19
Charge port cap 3-21
Steering wheel 3-21
Tilt operation 3-22
Sun visors 3-22
Vanity mirror 3-23
Mirrors 3-23
Inside rearview mirror 3-23
Manual anti-glare rearview mirror (if so equipped) 3-23
Automatic anti-glare type (if so equipped). . . 3-24
Outside mirrors 3-24

KEYS

A key number plate is supplied with your keys. Record the key number and keep it in a safe place (such as your wallet), not in the vehicle. If you lose your keys, it is recommended that you visit a NISSAN certified LEAF dealer for duplicates by using the key number. NISSAN does not record any key numbers so it is very important to keep track of your key number plate.

A key number is only necessary when you have lost all keys and do not have one to duplicate from. If you still have a key, it can be duplicated without knowing the key number.

NOTE:
Do not leave the keys inside the vehicle when leaving the vehicle.

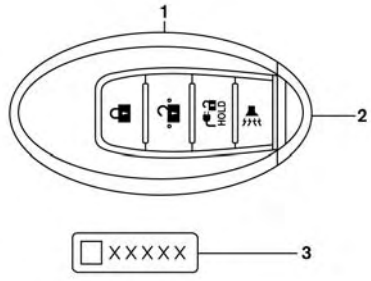

NISSAN INTELLIGENT KEY®

1. Intelligent Key (two sets)
2. Mechanical key (inside Intelligent Key)
3. Key number plate (one plate)

Your vehicle can only be driven with the Intelligent Keys which are registered to your vehicle's Intelligent Key system components and NISSAN Vehicle Immobilizer System components.

As many as four Intelligent Keys can be registered and used with one vehicle. The new keys must be registered by a NISSAN certified LEAF dealer prior to use with the Intelligent Key system and NISSAN Vehicle Immobilizer System of your vehicle. Since the registration process requires erasing all memory in the Intelligent Key components when registering new keys, be sure to take all Intelligent Keys that you have to the NISSAN certified LEAF dealer.

CAUTION

Be sure to carry the Intelligent Key with you when driving. The Intelligent Key is a precision device with a built-in transmitter. To avoid damaging it, please note the following.

- **The Intelligent Key is water resistant; however, wetting may damage the Intelligent Key. If the Intelligent Key gets wet, immediately wipe until it is completely dry.**
- **Do not bend, drop or strike it against another object.**
- **If the outside temperature is below 14°F (-10°C) degrees, the battery of the Intelligent Key may not function properly.**
- **Do not place the Intelligent Key for an extended period in a place where temperatures exceed 140°F (60°C).**

- **Do not change or modify the Intelligent Key.**
- **Do not use a magnet key holder.**
- **Do not place the Intelligent Key near an electric appliance such as a television set, personal computer or cellular phone.**
- **Do not allow the Intelligent Key to come into contact with water or salt water, and do not wash it in a washing machine. This could affect the system function.**

If an Intelligent Key is lost or stolen, NISSAN recommends erasing the ID code of that Intelligent Key. This will prevent the Intelligent Key from unauthorized use to unlock the vehicle. For information regarding the erasing procedure, it is recommended that you visit a NISSAN certified LEAF dealer.

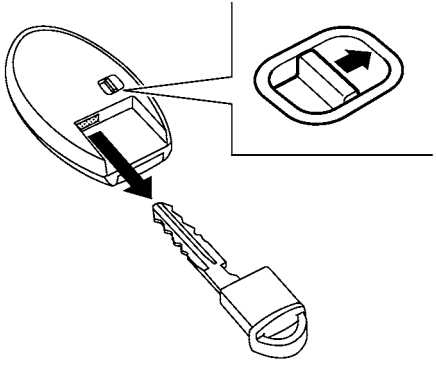

Mechanical key

To remove the mechanical key, release the lock knob at the back of the Intelligent Key.

To install the mechanical key, firmly insert it into the Intelligent Key until the lock knob returns to the lock position.

Use the mechanical key to lock or unlock the doors. For additional information, refer to "Doors" in this section.

CAUTION

Always carry the mechanical key installed in the Intelligent Key.

NISSAN VEHICLE IMMOBILIZER SYSTEM KEYS

You can only drive your vehicle using the master keys which are registered to the NISSAN Vehicle Immobilizer System components in your vehicle. These keys have a transponder chip in the key head.

The master key can be used for all the locks.

To protect belongings when you leave a key with someone, give them the Intelligent Key only, not the mechanical key.

Never leave these keys in the vehicle.

Additional or replacement keys:

If you still have a key, the key number is not necessary when you need extra NISSAN Vehicle Immobilizer System keys. A NISSAN certified LEAF dealer can duplicate your existing key. As many as four NISSAN Vehicle Immobilizer System keys can be used with one vehicle. You should bring all NISSAN

Vehicle Immobilizer System keys that you have to the NISSAN certified LEAF dealer for registration. This is because the registration process will erase the memory of all key codes previously registered into the NISSAN Vehicle Immobilizer System. After the registration process, these components will only recognize keys coded into the NISSAN Vehicle Immobilizer System during registration. Any key that is not given to the dealer at the time of registration will no longer be able to start your vehicle.

CAUTION

Do not allow the immobilizer system key, which contains an electrical transponder, to come into contact with water or salt water. This could affect system function.

DOORS

WARNING

- **Always have the doors locked while driving. Along with the use of seat belts, this provides greater safety in the event of an accident by helping to prevent persons from being thrown from the vehicle. This also helps keep children and others from unintentionally opening the doors, and will help keep out intruders.**
- **Before opening any door, always look for and avoid oncoming traffic.**
- **To help avoid risk of injury or death through unintended operation of the vehicle and or its systems, including entrapment in windows or inadvertent door lock activation, do not leave children, people who require the assistance of others or pets unattended in your vehicle. Additionally, the temperature inside a closed vehicle on a warm day can quickly become high enough to cause a significant risk of injury or death to people and pets.**

When the doors are locked using one of the following methods, the doors cannot be opened using the inside or outside door handles. The doors must be unlocked to open the doors.

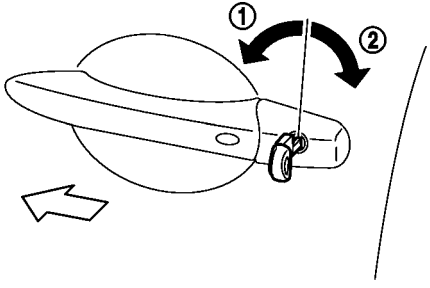

LOCKING WITH KEY (DRIVER'S SIDE ONLY)

To lock or unlock the vehicle, turn the key as shown.

Manual

To lock a door, turn the key towards the front of the vehicle ①. To unlock, turn the key toward the rear of the vehicle ②.

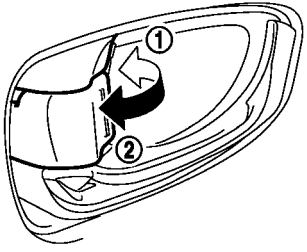

LOCKING WITH INSIDE LOCK KNOB

To lock the door without the key, move the inside lock knob to the lock position ① then close the door.

To unlock, move the inside lock knob to the unlock position ②.

When locking the door without a key, be sure not to leave the key inside the vehicle.

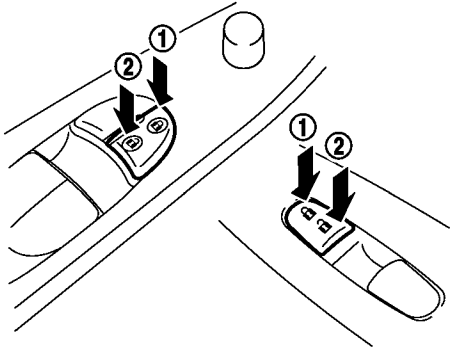

LOCKING WITH POWER DOOR LOCK SWITCH

Operating the power door lock switch will lock or unlock all the doors. The switches are located on the driver's and front passenger's door armrests.

To lock the doors, push the power door lock switch to the lock position ① with the driver's or front passenger's door open, then close the door.

When locking the door this way, be sure not to leave the key inside the vehicle.

To unlock the doors, push the power door lock switch to the unlock position ②.

Lockout protection

When the power door lock switch is moved to the lock position while any door is open, all doors will unlock automatically and a chime will sound after the door is closed.

This function help to prevent the Intelligent Key from being accidentally locked inside the vehicle.

AUTOMATIC DOOR LOCKS

- All doors lock automatically when the vehicle speed reaches 15 mph (24 km/h).

NOTE:
The automatic door unlock function can be changed using the "Vehicle Settings" of the vehicle information display. For additional information refer to "Vehicle information display" in the "Instruments and controls" section of this manual.

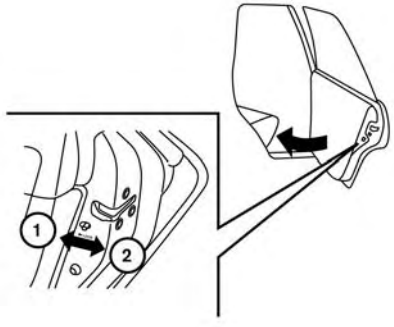

CHILD SAFETY REAR DOOR LOCK

Child safety rear door locks help prevent the rear doors from being opened accidentally, especially when small children are in the vehicle.

When the levers are in the lock position ①, the rear doors can be opened only from the outside.

To disengage, move the levers to the unlock position ②.

NISSAN INTELLIGENT KEY® SYSTEM

WARNING

- **Radio waves could adversely affect electric medical equipment. Those who use a pacemaker should contact the electric medical equipment manufacturer for the possible influences before use.**
- **The Intelligent Key transmits radio waves when the buttons are pressed. The FAA advises that the radio waves may affect aircraft navigation and communication systems. Do not operate the Intelligent Key while on an airplane. Make sure the buttons are not operated unintentionally when the unit is stored during a flight.**

The Intelligent Key system can operate all the door and the rear hatch locks by using the remote control function or pushing the request switch on the vehicle without taking the key out from a pocket or purse. The operating environment and/or conditions may affect the Intelligent Key system operation.

Be sure to read the following items before using the Intelligent Key system.

CAUTION

- **Be sure to carry the Intelligent Key with you when operating the vehicle.**
- **Never leave the Intelligent Key in the vehicle when you leave the vehicle.**

The Intelligent Key is always communicating with the vehicle because it receives radio waves. The Intelligent Key system transmits weak radio waves. Environmental conditions may interfere with the operation of the Intelligent Key system under the following operating conditions.

- When operating near a location where strong radio waves are transmitted, such as a TV tower, power station or broadcasting station.
- When in possession of wireless equipment, such as a cellular phone, transceiver or a CB radio.
- When the Intelligent Key is in contact with or covered by metallic materials.
- When any type of radio wave remote control is used nearby.
- When the Intelligent Key is placed near an electric appliance such as a personal computer.
- When the vehicle is parked near a parking meter.

In such cases, correct the operating conditions before using the Intelligent Key function or use the mechanical key.

Although the life of the battery varies depending on the operating conditions, the battery's life is approximately two years. If the battery is discharged, replace it with a new one.

When the Intelligent Key battery is almost discharged, firmly apply the foot brake and touch the power switch with the Intelligent Key. Then push the power switch while depressing the brake pedal within 10 seconds after the chime sound.

Since the Intelligent Key is continuously receiving radio waves, if the key is left near equipment that transmits strong radio waves, such as signals from a TV or personal computer, the battery life may become shorter.

For additional information, refer to "NISSAN Intelligent Key® battery replacement" in the "Maintenance and do-it-yourself" section of this manual.

Pay special attention that the vehicle battery is not completely discharged.

As many as four Intelligent Keys can be registered and used with one vehicle. For information about the purchase and use of additional Intelligent Keys, it is recommended that you visit a NISSAN certified LEAF dealer.

CAUTION

- **Do not allow the Intelligent Key, which contains electrical components, to come into contact with water or salt water. This could affect the functioning of the system.**
- **Do not drop the Intelligent Key.**
- **Do not strike the Intelligent Key sharply against another object.**
- **Do not change or modify the Intelligent Key.**
- **The Intelligent Key may be damaged if it gets wet. If the Intelligent Key gets wet, immediately wipe until it is completely dry.**

- **If the outside temperature is below 14˚F (–10˚C), the battery of the Intelligent Key may not function properly.**
- **Do not place the Intelligent Key for an extended period in an area where temperatures exceed 140˚F (60˚C).**
- **Do not attach the Intelligent Key to a key holder that contains a magnet.**
- **Do not place the Intelligent Key near equipment that produces a magnetic field, such as a TV, audio equipment, personal computer or cellular phone.**

If an Intelligent Key is lost or stolen, NISSAN recommends erasing the ID code of that Intelligent Key from the vehicle. This may prevent the unauthorized use of the Intelligent Key to operate the vehicle. For additional information, it is recommended that you visit a NISSAN certified LEAF dealer.

The Intelligent Key function can be disabled. For additional information, it is recommended that you visit a NISSAN certified LEAF dealer.

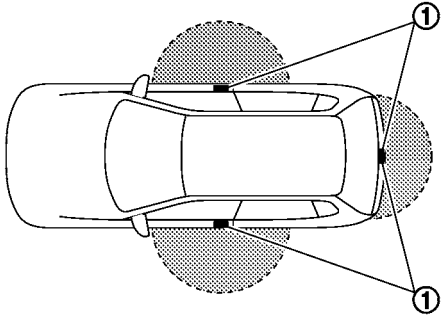

NISSAN INTELLIGENT KEY® OPERATING RANGE OF THE DOOR LOCK/UNLOCK FUNCTION

The Intelligent Key functions can only be used when the Intelligent Key is within the specified operating range from the request switch ①.

When the Intelligent Key battery is discharged or strong radio waves are present near the operating location, the Intelligent Key system's operating range becomes narrower, and the Intelligent Key may not function properly.

The operating range is within 31.50 in (80 cm) from each request switch ①.

If the Intelligent Key is too close to the door glass, handle or rear bumper, the request switches may not function.

When the Intelligent Key is within the operating range, it is possible for anyone who does not carry the Intelligent Key to push the request switch to lock/unlock the doors including the rear hatch.

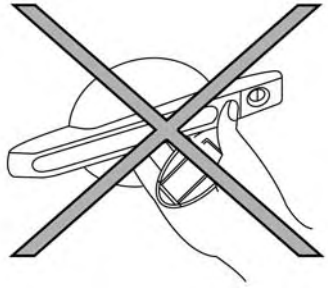

DOOR LOCKS/UNLOCKS PRECAUTION

- Do not push the door handle request switch with the Intelligent Key held in your hand as illustrated. The close distance to the door handle will cause the Intelligent Key system to have difficulty recognizing that the Intelligent Key is outside the vehicle.
- After locking with the door handle request switch, verify the doors are securely locked by testing them.
- To prevent the Intelligent Key from being left inside the vehicle, make sure you carry the key with you and then lock the doors.
- Do not pull the door handle before pushing the door handle request switch. The door will be unlocked but will not open. Release the door handle once and pull it again to open the door.

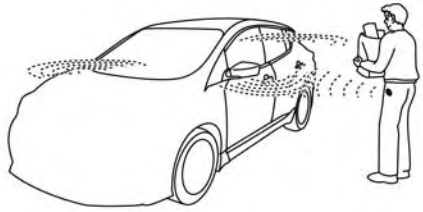

NISSAN INTELLIGENT KEY® OPERATION

You can lock or unlock the doors without taking the key out from your pocket or bag.

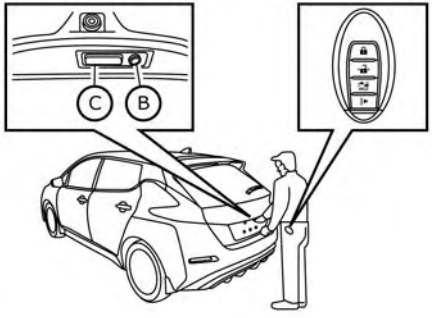

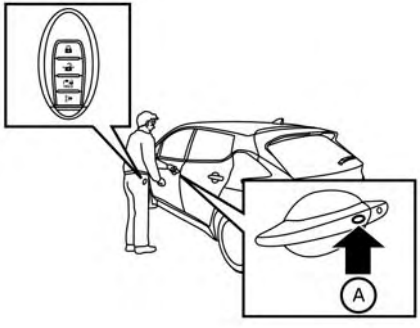

When you carry the Intelligent Key with you, you can lock or unlock all doors by pushing the door handle request switch (driver's or front passenger's) Ⓐ or rear hatch request switch Ⓑ within the range of operation.

When you lock or unlock the doors or the rear hatch, the hazard indicator will flash and the horn (or the outside chime) will sound as a confirmation. For additional information, refer to "Hazard warning flasher switch" in the "In case of emergency" section of this manual and "Horn" in the "Instruments and controls" section of this manual.

Locking doors

1. Push the power switch into the OFF position and make sure you carry the Intelligent Key with you.
2. Close all the doors and the rear hatch.
3. Push the door handle request switch (driver's or front passenger's) Ⓐ or the rear hatch request switch Ⓑ while carrying the Intelligent Key with you.*1
4. All the doors and the rear hatch will lock.
5. The hazard indicator flashes twice and the outside chime sounds twice.

*1: Doors will not lock by pushing the door handle request switch when the Intelligent Key is left inside the vehicle. A chime sounds to alert that the Intelligent Key is in the vehicle. However, when an Intelligent Key is inside the vehicle, doors can be locked with another registered Intelligent Key.

CAUTION

- **After locking the door using the request switch, make sure that the doors have been securely locked by operating the door handles.**
- **When locking the doors using the request switch, make sure to have the Intelligent Key in your possession before operating the request switch to prevent the Intelligent Key from being left in the vehicle.**
- **The request switch is operational only when the Intelligent Key has been detected by the Intelligent Key system.**

Unlocking doors

1. Push the door handle request switch Ⓐ or the rear hatch request switch Ⓑ once while carrying the Intelligent Key with you.
2. The hazard indicator flashes once and the outside chime sounds once. The corresponding door or the rear hatch will unlock.
3. Push the door handle request or the rear hatch request switch again within one minute.
4. The hazard indicator flashes once and the outside chime sounds once again. All the doors and the rear hatch will unlock.

All doors will be locked automatically unless one of the following operations is performed within one minute after pushing the request switch while the doors are locked.

- Opening any door.
- Pushing the power switch.

During this one minute time period, if the 🔓 button on the Intelligent Key is pressed, all doors will be locked automatically after another one minute.

NOTE:
If "Selective Unlock" is turned off in the "Vehicle Settings," all doors will unlock upon first request switch press.

Opening rear hatch

1. Carry the Intelligent Key.
2. Push the rear hatch opener switch Ⓒ.
3. The rear hatch will unlock and open.

12-VOLT BATTERY SAVER SYSTEM

When all the following conditions are met for a period of time, the battery saver system will cut off the power supply to prevent 12-volt battery discharge.

- The power switch is in the ACC or ON position,
- All doors are closed, and
- The vehicle is in the P (Park) position.

WARNING SIGNALS

To help prevent the vehicle from moving unexpectedly by erroneous operation of the Intelligent Key listed on the following chart or to help prevent the vehicle from being stolen, chime or beep sounds inside and outside the vehicle and a warning displays in the vehicle information display.

When a chime or beep sounds or the warning displays, be sure to check the vehicle and Intelligent Key.

For additional information, refer to the "Troubleshooting guide" in this section and "Vehicle information display" in the "Instruments and controls" section of this manual.

TROUBLESHOOTING GUIDE

Verify the location of all Intelligent Keys that are programmed for the vehicle. If another Intelligent Key is in range or inside the vehicle, the vehicle system may respond differently than expected.

Symptom		Possible cause	Action to take
When opening the driver's door to get out of the vehicle	The inside warning chime sounds continuously.	The power switch is pushed to the OFF position while the driver's door is open.	Close the driver's door.
		The power switch is in the ACC position.	Push the power switch to the OFF position then close the driver's door.
When closing the door after getting out of the vehicle	The Key is not detected warning appears on the display, the outside chime sounds three times and the inside warning chime sounds for a few seconds.	The power switch is in the ACC or ON position.	Push the power switch to the OFF position.
	The outside chime sounds continuously.	The power switch is in the ACC or OFF position, the electric shift control system has malfunctioned and the vehicle cannot be placed in the P (Park) position when the parking brake is not applied.	Make sure the parking brake is applied.
When closing the door with the inside lock knob turned to LOCK	The outside chime sounds for a few seconds and all the doors unlock.	The Intelligent Key is inside the vehicle or cargo area.	Carry the Intelligent Key with you.
When pushing the request switch or the 🔒 button on the Intelligent Key to lock the door	The outside chime sounds for a few seconds.	The Intelligent Key is inside the vehicle or a cargo area.	Carry the Intelligent Key with you.
When pushing the power switch in the READY to drive position	The Intelligent Key battery discharge indicator appears on the display.	The Intelligent Key battery charge is low.	Replace the battery with a new one. For additional information, refer to "NISSAN Intelligent Key® battery replacement" in the "Maintenance and do-it-yourself" section of this manual.
	The Key is not detected warning appears on the display and the inside warning chime sounds for a few seconds.	The Intelligent Key is not in the vehicle.	Carry the Intelligent Key with you.
When pushing the power switch	The Intelligent Key system warning indicator appears on the display.	It warns of a malfunction with the Intelligent Key system.	It is recommended that you visit a NISSAN certified LEAF dealer.

HOW TO USE REMOTE KEYLESS ENTRY FUNCTION

WARNING

- **Radio waves could adversely affect electric medical equipment. Those who use a pacemaker should contact the electric medical equipment manufacturer for the possible influences before use.**
- **The Intelligent Key transmits radio waves when the buttons are pressed. The FAA advises that the radio waves may affect aircraft navigation and communication systems. Do not operate the Intelligent Key while on an airplane. Make sure the buttons are not operated unintentionally when the unit is stored during a flight.**

CAUTION

- **Do not allow the Intelligent Key, which contains electrical components, to come into contact with water or salt water. This could affect the system function.**
- **Do not drop the Intelligent Key.**
- **Do not strike the Intelligent Key sharply against another object.**
- **Do not change or modify the Intelligent Key.**
- **Wetting may damage the Intelligent Key. If the Intelligent Key gets wet, immediately wipe until it is completely dry.**
- **Do not place the Intelligent Key for an extended period in an area where temperatures exceed 140˚F (60˚C).**
- **Do not attach the Intelligent Key with a key holder that contains a magnet.**
- **Do not place the Intelligent Key near equipment that produces a magnetic field, such as a TV, audio equipment, personal computers or cellular phone.**

The remote keyless entry function can operate all door locks using the remote keyless entry function of the Intelligent Key. The remote keyless entry function can operate at a distance of approximately 33 ft (10 m) from the vehicle. The operating distance depends upon the conditions around the vehicle.

The remote keyless entry function will not operate:

- When the Intelligent Key is not within the operational range.
- When the doors are open or not closed securely.
- When the Intelligent Key battery is discharged.

CAUTION

When locking the doors using the Intelligent Key, be sure not to leave the key in the vehicle.

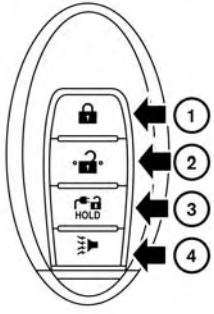

Locking doors

① Lock button
② Unlock button
③ Charge port unlock
④ Panic button

When you lock or unlock the doors, the hazard indicator will flash and the horn will sound as a confirmation. For additional information, refer to "Hazard warning flasher switch" in the "In case of emergency" section and "Horn" in the "Instruments and controls" sections of this manual.

1. Push the power switch to the OFF position and make sure you carry the Intelligent Key with you.
2. Carry the Intelligent Key with you.
3. Close all the doors.
4. Press the button ① on the Intelligent Key.
5. All the doors and the rear hatch will lock.
6. The hazard indicator flashes twice and the horn chirps once.

Operate the door handles to confirm that the doors have been securely locked.

Unlocking doors

1. Press the button ② on the Intelligent Key once.
2. The hazard indicator flashes once. The driver's door will unlock.
3. Press the button on the Intelligent Key again within one minute.
4. The hazard indicator flashes once again. All the doors and the rear hatch will unlock.

All doors will be locked automatically unless one of the following operations is performed within one minute after pressing the button while the doors are locked.

- Opening any door (including the rear hatch).
- Pushing the power switch.

During this one minute time period, if the button on the Intelligent Key is pressed, all doors will be locked automatically after another one minute.

Opening charge port lid

The charge port lid may be opened by pressing and holding the HOLD button ③.

For additional information, refer to "Opening charge port lid" in this section.

Using panic alarm

If you are near your vehicle and feel threatened, you may activate the alarm to call attention as follows:

1. Push the button ④ on the Intelligent Key for **more than 1 second.**
2. The panic alarm and headlights will stay on for a period of time.

3. The panic alarm stops when:
   - It has run for a period of time, or
   - Any of the buttons on the Intelligent Key is pushed. (Note: The button must be pushed for more than 1 second.)

Setting hazard indicator and horn mode

This vehicle is set in hazard indicator and horn mode when you first receive the vehicle.

In hazard indicator and horn mode, when the button ① is pressed, the hazard indicator flashes twice and the horn chirps once. When the button ② is pressed, the hazard indicator flashes once.

If horns are not necessary, the system can be switched to the hazard indicator mode.

In hazard indicator mode, when the button is pressed, the hazard indicator flashes twice. When the button is pressed, neither the hazard indicator nor the horn operates.

Hazard indicator and horn mode:

Operation	DOOR LOCK	DOOR UNLOCK
Pushing door handle request switch or rear hatch request switch	HAZARD - **twice** OUTSIDE CHIME - **twice**	HAZARD - **once** OUTSIDE CHIME - **once**
Pressing or button	HAZARD - **twice** HORN - **once**	HAZARD - **once** HORN - none

Hazard indicator mode:

Operation	DOOR LOCK	DOOR UNLOCK
Pushing door handle request switch or rear hatch request switch	HAZARD - **twice** OUTSIDE CHIME - none	HAZARD - none OUTSIDE CHIME - none
Pressing or button	HAZARD - **twice** HORN - none	HAZARD - none HORN - none

Switching procedure:

To switch the hazard indicator and horn (chime) operation, press the 🔒 ① and 🔓 ② buttons on the Intelligent Key simultaneously for more than two seconds.

- When the hazard indicator mode is set, the hazard indicator flashes three times.
- When the hazard indicator and horn mode is set, the hazard indicator flashes once and the horn chirps once.

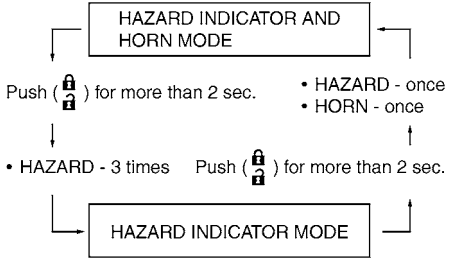

HOOD

WARNING

- **Make sure that the hood is completely closed and latched before driving. Failure to do so could cause the hood to open during driving and result in an accident.**
- **If steam or smoke is emitting from the motor compartment, do not open the hood. Doing so could cause an injury.**

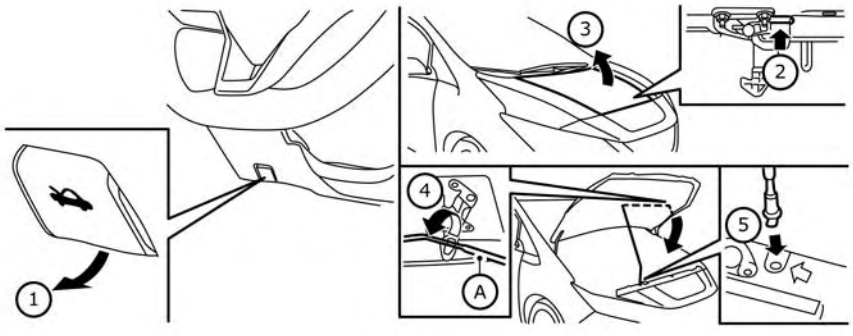

When opening the hood:

1. Securely close the charge port door.
2. Pull the hood lock release handle ① located below the instrument panel. The hood will then spring up slightly.
3. Locate the lever ② in between the hood and charge port lid, and push the lever upward with your fingertips.
4. Raise the hood ③.
5. Remove the support rod ④ from the hood and insert it into the slot ⑤.

Hold the coated part Ⓐ when removing or resetting the support rod. Avoid direct contact with the metal parts because they may be hot immediately after the EV system has been stopped.

When closing the hood:

1. Return the support rod to its original position.
2. Slowly move the hood down to latch the lock.
3. Push the hood down to lock the hood securely into place.

REAR HATCH

WARNING

- **Always make sure that the rear hatch has been closed securely to prevent it from opening while driving.**
- **Do not drive with the rear hatch open.**
- **Make sure that all passengers have their hands, etc. inside the vehicle before closing the rear hatch.**

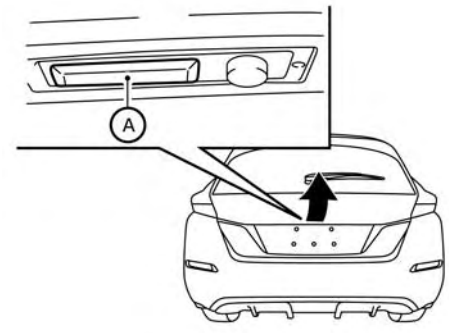

To open the rear hatch, unlock it and push the rear hatch opener switch Ⓐ. Pull up the rear hatch to open.

The rear hatch can be unlocked by:

- Pushing the rear hatch request switch. For additional information, refer to "NISSAN Intelligent Key® system" in this section.
- Pressing the 🔓 button on the Intelligent Key. For additional information, refer to "NISSAN Intelligent Key® system" in this section.
- Pressing the 🔓 button on the remote control. For additional information, refer to "NISSAN Intelligent Key® system" in this section.
- Pushing the power door lock switch to the unlock position.

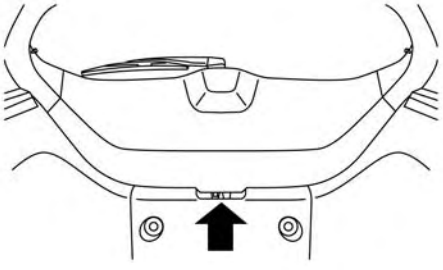

SECONDARY REAR HATCH RELEASE

Follow the following steps to unlock the liftgate when the battery is discharged.

NOTE:
It is recommended that you visit a NISSAN certified LEAF dealer as soon as possible for inspection.

CHARGE PORT LID

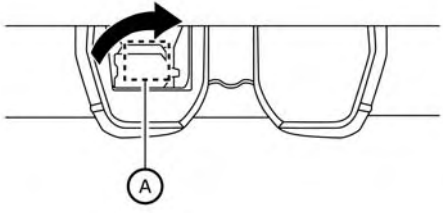

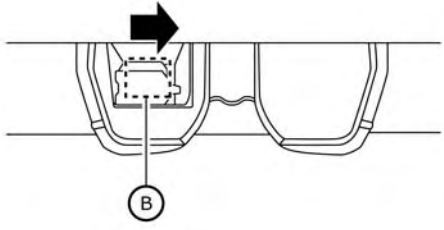

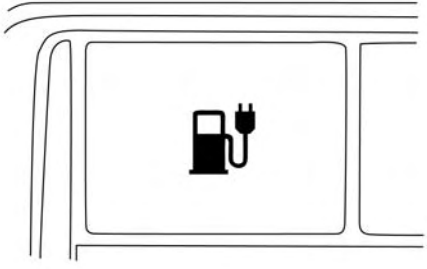

Switch

Unlocking the rear hatch:

1. Move the cover Ⓐ by using a screwdriver or a similar tool available on hand.

2. Then move the inside lever Ⓑ by using a screwdriver or similar tool available on hand. The rear hatch will open.

OPENING CHARGE PORT LID

CAUTION

Make sure that the charge port lid is completely closed and latched before driving. Failure to do so could cause the lid to open suddenly during driving.

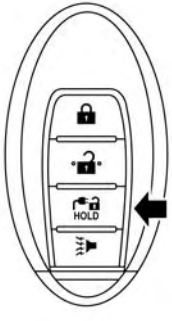

Button

When opening the charge port lid perform one of the following:

- Push the charge port lid opener switch located on the instrument panel, or
- Press and hold the HOLD button on the Intelligent Key for more than one second.

When opening the charge port lid:

1. The charging status indicator lights flash and a chime sounds three times and the charge port lid will then spring up slightly.

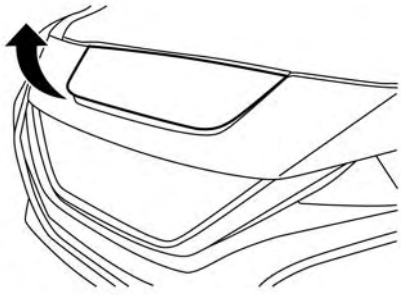

2. Put your hand into the underside of the lid and open until it is in the fully open position.

When closing the charge port lid:

1. Slowly move the lid down.
2. Lock it securely into place.

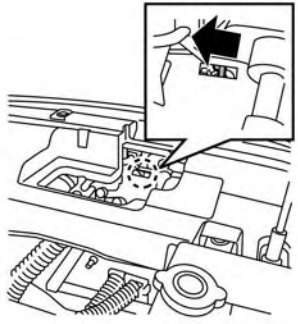

If the charge port lid cannot be unlocked

1. Open the hood.
2. Move the lever behind the charge port lid in the direction of the arrow using a flat head screwdriver or suitable tool, and the port is unlocked.

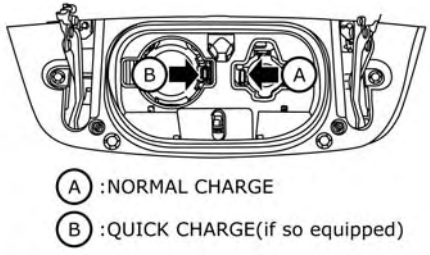

CHARGE PORT CAP

When opening the charge port cap, press the tab inward and the cap will spring open.

When the charge port cap is closed to its previous position, it will lock automatically.

CAUTION

- **When charging is finished, be sure to close the charge port cap. If water or dust gets inside the charge port, this may cause a malfunction.**
- **Pay particular attention when using the normal charge port as the charge port lid can be closed even when the normal charge port cap is open.**
- **Close the quick charge (if so equipped) port cap before closing the charging lid. The quick charge port cap can be damaged if it is open when closing the charge port lid.**

STEERING WHEEL

WARNING

- **Do not adjust the steering wheel while driving. You could lose control of your vehicle and cause an accident.**
- **Do not adjust the steering wheel any closer to you than is necessary for proper steering operation and comfort. The driver's air bag inflates with great force. If you are unrestrained, leaning forward, sitting sideways or out of position in any way, you are at greater risk of injury or death in a crash. You may also receive serious or fatal injuries from the air bag if you are up against it when it inflates. Always sit back against the seatback and as far away as practical from the steering wheel. Always use the seat belts.**

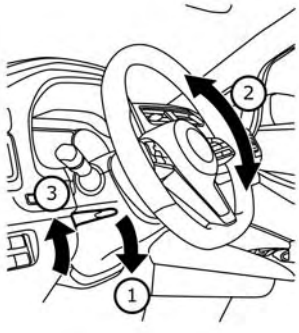

TILT OPERATION

Push the lock lever down ① and adjust the steering wheel up or down ② to the desired position.

Pull the lock lever up ③ to lock the steering wheel in place.

SUN VISORS

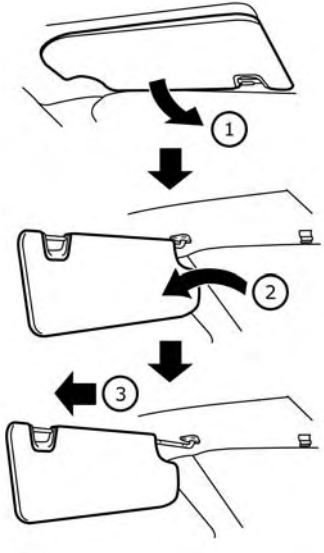

1. To block out glare from the front, swing down the sun visor ①.
2. To block glare from the side, remove the sun visor from the center mount and swing it to the side ②.
3. Slide the extension sun visor in or out as needed ③.

CAUTION

- **Do not store the sun visor before returning the extension to its original position.**
- **Do not pull the extension sun visor forcedly downward.**

MIRRORS

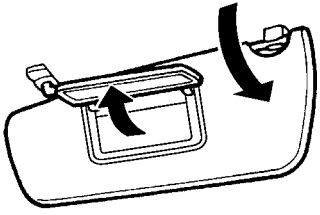

VANITY MIRROR

To use the front vanity mirror, pull down the sun visor and pull up the cover.

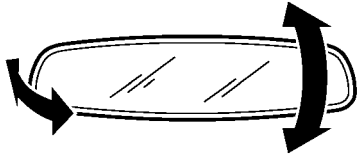

INSIDE REARVIEW MIRROR

Adjust the angle of the inside rearview mirror to the preferred position.

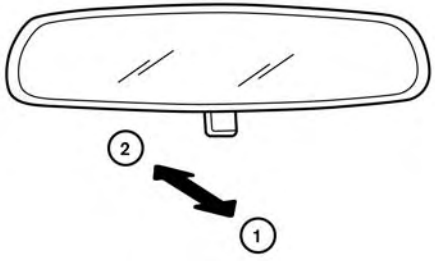

MANUAL ANTI-GLARE REARVIEW MIRROR (IF SO EQUIPPED)

The night position ① reduces glare from the headlights of vehicles behind you at night.

Use the day position ② when driving in daylight hours.

WARNING

Use the night position only when necessary, because it reduces rearview clarity.

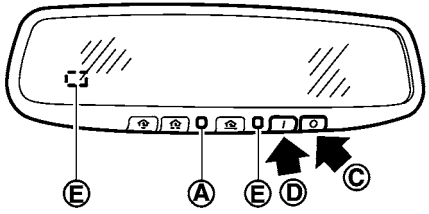

AUTOMATIC ANTI-GLARE TYPE (IF SO EQUIPPED)

The inside mirror is designed so that it automatically changes reflection based on the intensity of the headlights of the vehicle behind.

When the system is turned on, the indicator light Ⓐ will illuminate and excessive glare from the headlights of the vehicle behind you will be reduced.

Push the "O" switch Ⓒ to make the inside rearview mirror operate normally. The indicator light will turn off. Push the "I" switch Ⓓ to turn the system on.

Do not allow any object to cover the sensors Ⓔ or apply glass cleaner on them. Doing so will reduce the sensitivity of the sensor, resulting in improper operation. Do not hang any objects on the mirror or apply glass cleaner to it. Doing so will reduce the sensitivity of the sensor Ⓑ, resulting in improper operation.

WARNING

Use the night position only when necessary, because it reduces rear view clarity.

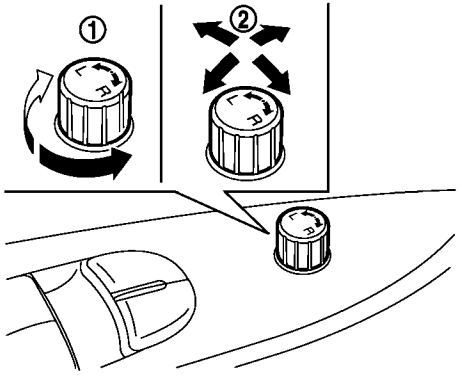

OUTSIDE MIRRORS

Adjusting outside mirrors

WARNING

Objects viewed in the outside mirror on the passenger side are closer than they appear. Be careful when moving to the right. Using only this mirror could cause an accident. Use the inside mirror or glance over your shoulder to properly judge distances to other objects.

The outside mirror control switch is located on the armrest.

The outside mirror will operate only when the power switch is in the ACC or ON position.

Turn the switch right or left to select the right or left side mirror ①, then adjust the mirror using the control switch ②.

Move the switch to the center (neutral) position to prevent accidentally moving the mirror.

Defrosting outside mirrors (if so equipped)

The outside mirrors will be heated when the rear window defroster switch is operated. For additional information, refer to "Rear window and outside mirror (if so equipped) defroster switch" in the "Instruments and controls" section of this manual.

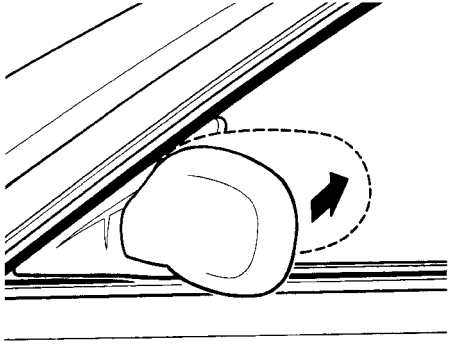

Folding outside mirrors

Fold the outside mirror by pushing it toward the rear of the vehicle.

NOTES

4 Monitor, climate, audio, phone and voice recognition systems

NissanConnect® Manual (for Leaf) 4-3
RearView Monitor (if so equipped) 4-4
RearView Monitor system operation 4-5
How to read the displayed lines 4-6
Difference between predicted and actual distances 4-6
How to park with predicted course lines (models with Navigation System) 4-8
Adjusting the screen 4-10
How to turn on and off predicted course lines (models with navigation) 4-11
RearView Monitor system limitations 4-11
System maintenance 4-12
Intelligent Around View Monitor (if so equipped) . . . 4-13
Intelligent Around View Monitor system operation 4-15
Difference between predicted and actual distances 4-18
How to park with predicted course lines . . . 4-19
How to switch the display 4-20
Adjusting the screen 4-21
Intelligent Around View Monitor system limitations 4-22
System Maintenance 4-24
Moving Object Detection (if so equipped) 4-25
MOD system operation 4-26
Turning MOD ON and OFF 4-27
MOD system limitations 4-27
System maintenance 4-28
Vents 4-29
Heater and air conditioner (automatic) 4-30
Operating tips 4-32
In-cabin microfilter 4-33
Automatic climate control (models without Navigation System) 4-33
Automatic climate control (models with Navigation System) 4-37
Climate ctrl. timer 4-40
Servicing climate control 4-44
Audio system (models without Navigation System) 4-45
Radio 4-45
FM radio reception 4-45
AM radio reception 4-46
Satellite radio reception 4-46
Audio operation precautions 4-47
FM/AM/SAT radio with compact disc (CD) player 4-54

USB (Universal Serial Bus) connection port . .4-60
iPod® player operation. 4-61
Bluetooth® streaming audio. 4-64
Aux device player operation 4-64
CD care and cleaning 4-65
Steering wheel switch for audio control 4-65
Antenna 4-66
Car phone or CB radio. 4-67
Bluetooth® Hands-Free Phone System without Navigation System (if so equipped) 4-67
Regulatory information 4-69
Using the system 4-69
Control buttons 4-70
Connecting procedure. 4-71
Voice commands 4-72
Making a call 4-73
Receiving a call. 4-74
During a call 4-74
Ending a call 4-74
Text messaging (if so equipped) 4-75
Bluetooth® settings 4-76
Manual controls 4-77
Troubleshooting guide 4-78

NISSANCONNECT® MANUAL (FOR LEAF)

Refer to the NissanConnect® Manual (for Leaf) that includes the following information.

- EV-Specific functions
- Audio
- Hands-Free Phone
- NissanConnect® EV and Services
- Apple CarPlay™
- Android Auto™
- Navigation
- Voice recognition
- Information and settings viewable on the system

REARVIEW MONITOR (IF SO EQUIPPED)

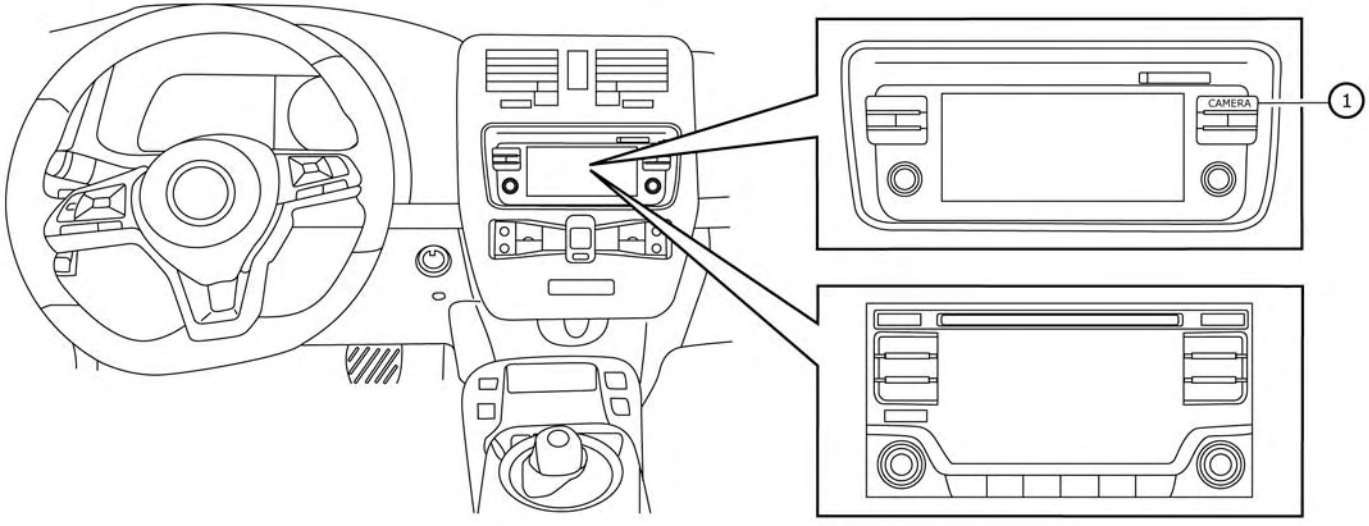

1. CAMERA button (if so equipped)

WARNING

Failure to follow the warnings and instructions for proper use of the RearView Monitor system could result in serious injury or death.

- **RearView Monitor is a convenience feature and is not a substitute for proper backing. Always turn and look out the windows and check mirrors to be sure that it is safe to move before operating the vehicle.**

Always back up slowly.

- **The system is designed as an aid to the driver in showing large stationary objects directly behind the vehicle, to help avoid damaging the vehicle.**
- **The distance guide line and the vehicle width line should be used as a reference only when the vehicle is on a level paved surface. The distance viewed on the monitor is for reference only and may be different than the actual distance between the vehicle and displayed objects.**

CAUTION

Do not scratch the camera lens when cleaning dirt or snow from the front of the camera.

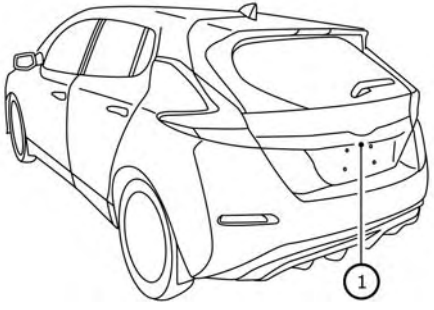

The RearView Monitor system automatically shows a rear view of the vehicle when the shift lever is shifted into the R (Reverse) position. The radio can still be heard while the RearView Monitor is active.

To display the rear view, the RearView Monitor system uses a camera located just above the vehicle's license plate ①.

REARVIEW MONITOR SYSTEM OPERATION

With the EV (electric vehicle) system on, move the shift lever to the R (Reverse) position or press the CAMERA button (if so equipped) to operate the RearView Monitor.

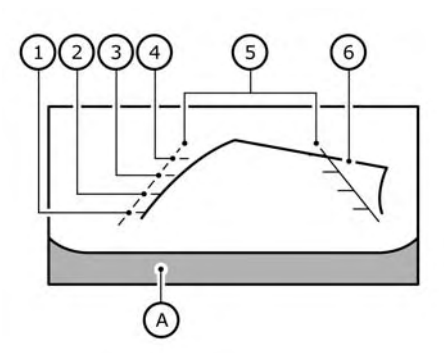

HOW TO READ THE DISPLAYED LINES

Guiding lines which indicate the vehicle width and distances to objects with reference to the vehicle body line Ⓐ are displayed on the monitor.

Distance guide lines

Indicate distances from the vehicle body.

- Red line ①: approx. 1.5 ft (0.5 m)
- Yellow line ②: approx. 3 ft (1 m)
- Green line ③: approx. 7 ft (2 m)
- Green line ④: approx. 10 ft (3 m)

Vehicle width guide lines ⑤

Indicate the vehicle width when backing up.

Predicted course lines (models with navigation system) ⑥

Indicate the predicted course when backing up. The predicted course lines will be displayed on the monitor when the shift lever is in the R (Reverse) position and the steering wheel is turned. The predicted course lines will move depending on how much the steering wheel is turned and will not be displayed while the steering wheel is in the straight-ahead position.

The vehicle width guide lines and the width of the predicted course lines are wider than the actual width and course.

DIFFERENCE BETWEEN PREDICTED AND ACTUAL DISTANCES

The displayed guidelines and their locations on the ground are for approximate reference only. Objects on uphill or downhill surfaces or projecting objects will be actually located at distances different from those displayed in the monitor relative to the guidelines (refer to illustrations). When in doubt, turn around and view the objects as you are backing up, or park and exit the vehicle to view the positioning of objects behind the vehicle.

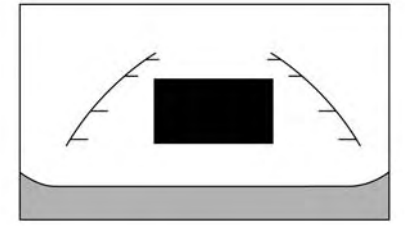

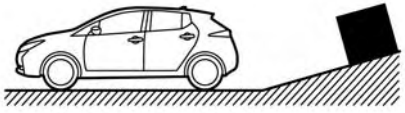

Backing up on a steep uphill

When backing up the vehicle up a hill, the distance guide lines and the vehicle width guide lines are shown closer than the actual distance. Note that any object on the hill is further than it appears on the monitor.

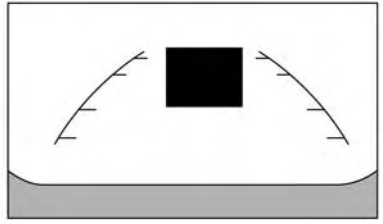

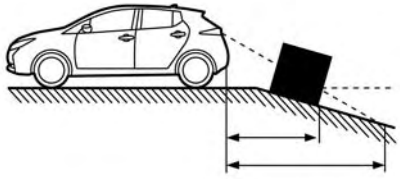

Backing up on a steep downhill

When backing up the vehicle down a hill, the distance guide lines and the vehicle width guide lines are shown farther than the actual distance. Note that any object on the hill is closer than it appears on the monitor.

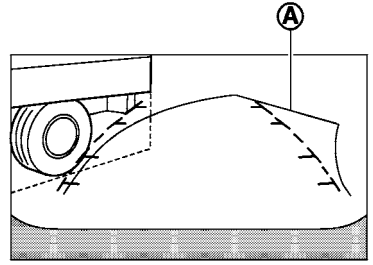

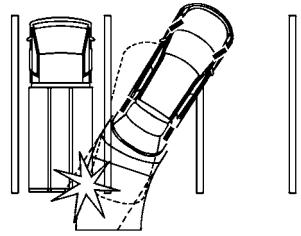

Backing up near a projecting object

The predicted course lines (models with navigation system) Ⓐ do not touch the object in the display. However, the vehicle may hit the object if it projects over the actual backing up course.

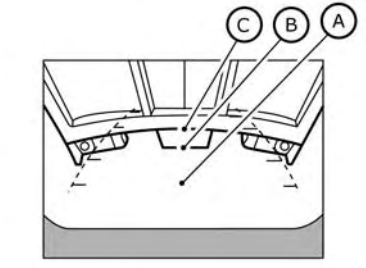

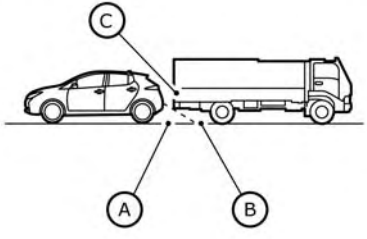

Backing up behind a projecting object

The position Ⓒ is shown farther than the position Ⓑ in the display. However, the position Ⓒ is actually at the same distance as the position Ⓐ. The vehicle may hit the object when backing up to the position Ⓐ if the object projects over the actual backing up course.

HOW TO PARK WITH PREDICTED COURSE LINES (MODELS WITH NAVIGATION SYSTEM)

WARNING

- **If the tires are replaced with different sized tires, the predicted course lines may be displayed incorrectly.**
- **On a snow-covered or slippery road, there may be a difference between the predicted course line and the actual course line.**
- **If the battery is disconnected or becomes discharged, the predicted course lines may be displayed incorrectly. If this occurs, please perform the following procedures:**
  - Turn the steering wheel from lock to lock while the EV (electric vehicle) system is running.
  - Drive the vehicle on a straight road for more than 5 minutes.
- **When the steering wheel is turned with the power switch in the ACC position, the predicted course lines may be displayed incorrectly.**

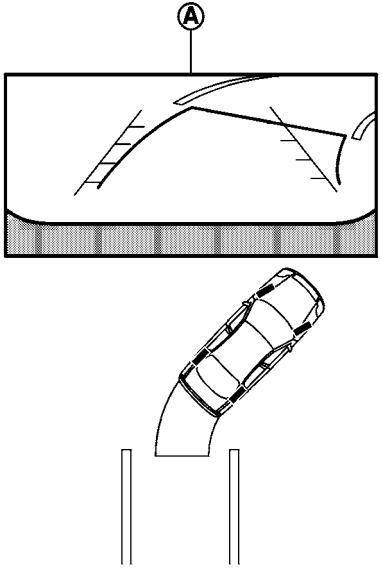

1. Visually check that the parking space is safe before parking your vehicle.
2. The rear view of the vehicle is displayed on the screen Ⓐ when the shift lever is moved to the R (Reverse) position.

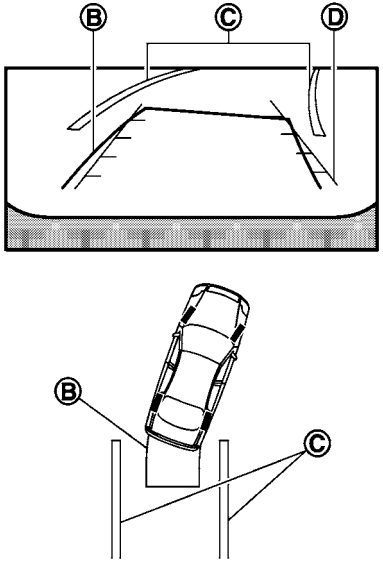

3. Slowly back up the vehicle adjusting the steering wheel so that the predicted course lines Ⓑ enter the parking space Ⓒ .
4. Maneuver the steering wheel to make the vehicle width guide lines Ⓓ parallel to the parking space Ⓒ while referring to the predicted course lines.
5. When the vehicle is parked in the space completely, move the shift lever to the P (Park) position and apply the parking brake.

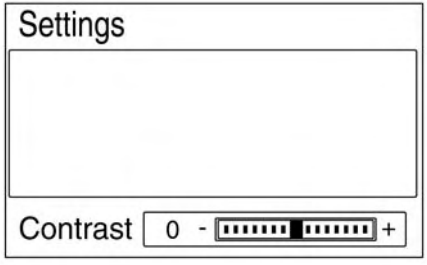

Models without navigation system

ADJUSTING THE SCREEN

1. While on a RearView Monitor screen, press the ENTER/SETTING button until the Brightness or Contrast setting bar is displayed below the RearView Monitor screen.
2. Turn the TUNE/SCROLL knob to adjust the level.
3. To complete the adjustment, press the ENTER/SETTING button until the Brightness or Contrast setting bar disappears from the RearView Monitor screen.

NOTE:
Do not adjust any of the display settings of the RearView Monitor while the vehicle is moving. Make sure the parking brake is firmly applied

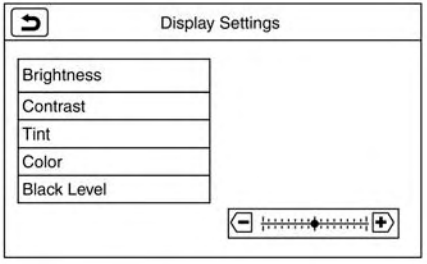

Models with navigation system

1. While on a RearView Monitor screen, touch the touch-screen display. The Camera Setting screen will come up.
2. Touch the "Brightness," "Contrast," "Tint," "Color," or "Black Level" key.
3. Adjust the item by touching the + or - key on the touch-screen display.

HOW TO TURN ON AND OFF PREDICTED COURSE LINES (MODELS WITH NAVIGATION)

To toggle ON and OFF the predicted course lines while in the P (Park) position:

1. Touch the Settings key.
2. Touch the Camera key.
3. Touch the Predicted Course Lines key to turn the feature ON or OFF.

To toggle ON and OFF the predicted course lines while in the R (Reverse) position:

1. Touch the touch-screen display.
2. Touch the Predicted Course Lines key to turn the feature ON or OFF.

REARVIEW MONITOR SYSTEM LIMITATIONS

WARNING

Listed below are the system limitations for RearView Monitor. Failure to operate the vehicle in accordance with these system limitations could result in serious injury or death.

- **The system cannot completely eliminate blind spots and may not show every object.**
- **Underneath the bumper and the corner areas of the bumper cannot be viewed on the RearView Monitor because of its monitoring range limitation. The system will not show small objects below the bumper, and may not show objects close to the bumper or on the ground.**
- **Objects viewed in the RearView Monitor differ from actual distance because a wide-angle lens is used.**
- **Objects in the RearView Monitor will appear visually opposite compared to when viewed in the rearview and outside mirrors.**
- **Use the displayed lines as a reference. The lines are highly affected by the number of occupants, fuel level, vehicle position, road conditions and road grade.**
- **Make sure that the rear hatch is securely closed when backing up.**
- **Do not put anything on the rearview camera. The rearview camera is installed above the license plate.**
- **When washing the vehicle with high pressure water, be sure not to spray it around the camera. Otherwise, water may enter the camera unit causing water condensation on the lens, a malfunction, fire or an electric shock.**
- **Do not strike the camera. It is a precision instrument. Otherwise, it may malfunction or cause damage resulting in a fire or an electric shock.**

The following are operating limitations and do not represent a system malfunction:

- When the temperature is extremely high or low, the screen may not clearly display objects.
- When strong light directly shines on the camera, objects may not be displayed clearly.
- Vertical lines may be seen in objects on the screen. This is due to strong reflected light from the bumper.
- The screen may flicker under fluorescent light.
- The colors of objects on the RearView Monitor may differ somewhat from the actual color of objects.

- Objects on the monitor may not be clear in a dark environment.
- There may be a delay when switching between views.
- If dirt, rain or snow accumulate on the camera, RearView Monitor may not display objects clearly. Clean the camera.
- Do not use wax on the camera lens. Wipe off any wax with a clean cloth dampened with a diluted mild cleaning agent, then wipe with a dry cloth.

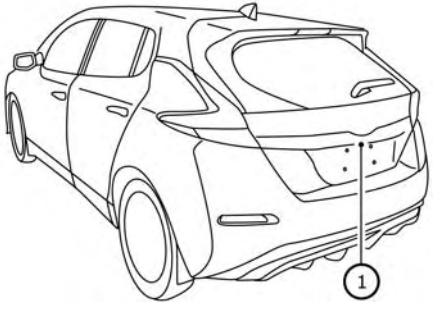

If dirt, rain or snow accumulates on the camera ①, the RearView Monitor may not display objects clearly. Clean the camera by wiping it with a cloth dampened with a diluted mild cleaning agent and the wiping it with a dry cloth.

SYSTEM MAINTENANCE

CAUTION

- **Do not use alcohol, benzine or thinner to clean the camera. This will cause discoloration.**
- **Do not damage the camera as the monitor screen may be adversely affected.**

INTELLIGENT AROUND VIEW MONITOR (IF SO EQUIPPED)

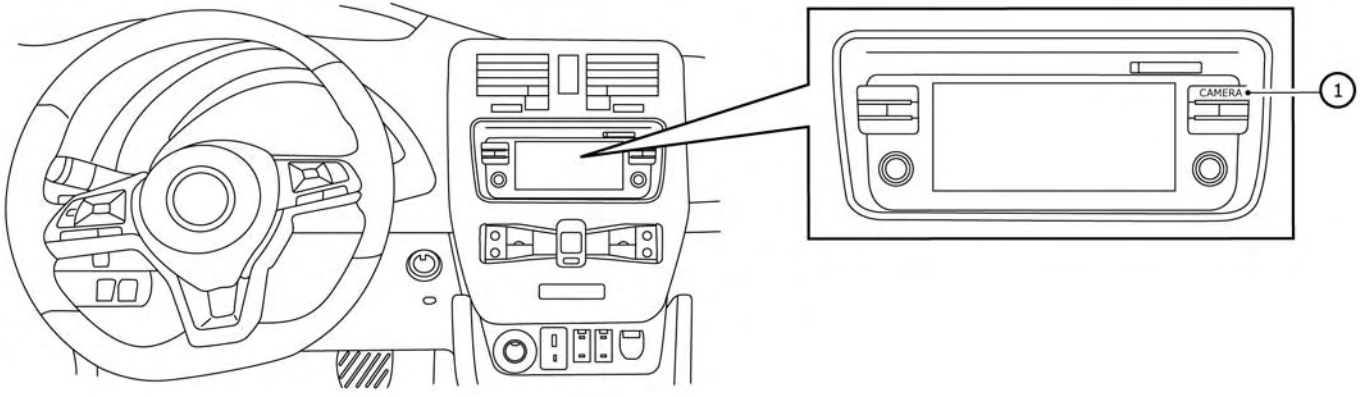

1. CAMERA button

WARNING

Failure to follow the warnings and instructions for proper use of the Intelligent Around View Monitor system could result in serious injury or death.

- **The Intelligent Around View Monitor is a convenience feature and is not a substitute for proper vehicle operation because it has areas where objects cannot be viewed. The four corners of the vehicle in particular, are**

areas where objects do not always appear in the bird's-eye, front, or rear views. Always check your surroundings to be sure that it is safe to move before operating the vehicle. Always operate the vehicle slowly.

- **The driver is always responsible for safety during parking and other maneuvers.**

CAUTION

Do not scratch the camera lens when cleaning dirt or snow from the front of the camera.

The Intelligent Around View Monitor system is designed as an aid to the driver in situations such as slot parking or parallel parking. The monitor displays various views of the position of the vehicle in a split screen format. Not all views are available at all times.

Available views:

- Front View

  An approximately 150–degree view of the front of the vehicle.

- Rear View

  An approximately 150–degree view of the rear of the vehicle.

- Bird's-Eye View

  The surrounding views of the vehicle from above.

- Front-Side View

  The view around and ahead of the front passenger's side wheel.

- Full screen rear view

  The view to the rear of the vehicle (which is a little wider than the standard rear view).

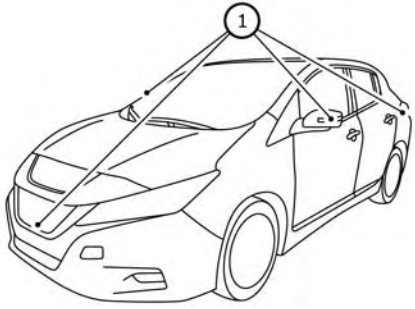

To display the multiple views, the Intelligent Around View Monitor system uses cameras located in the front grille, on the vehicle's outside mirrors and one just above the vehicle's license plates ①.

INTELLIGENT AROUND VIEW MONITOR SYSTEM OPERATION

With the EV (electric vehicle) system on, move the shift lever to the R (Reverse) position or press the CAMERA button to operate the Intelligent Around View Monitor. The screen displayed on the Intelligent Around View Monitor will automatically return to the previous screen 3 minutes after the CAMERA button has been pressed with the shift lever in a position other than the R (Reverse) position.

Available views

WARNING

- **The distance guide lines and the vehicle width lines should be used as a reference only when the vehicle is on a paved, level surface. The apparent distance viewed on the monitor may be different than the actual distance between the vehicle and displayed objects.**
- **Use the displayed lines and the bird's eye view as a reference. The lines and the bird's-eye view are greatly affected by the number of occupants, cargo, fuel level, vehicle position, road condition and road grade.**
- **If the tires are replaced with different sized tires, the predicted course lines and the bird's-eye view may be displayed incorrectly.**
- **When driving the vehicle up a hill, objects viewed in the monitor are further than they appear. When driving the vehicle down a hill, objects viewed in the monitor are closer than they appear.**
- **Objects in the rear view will appear visually opposite compared to when viewed in the rear view and outside mirrors.**
- **Use the mirrors or actually look to properly judge distances to other objects.**
- **On a snow-covered or slippery road, there may be a difference between the predicted course lines and the actual course line.**
- **The vehicle width and predicted course lines are wider than the actual width and course.**
- **The displayed lines will appear slightly off to the right, because the rearview camera is not installed in the rear center of the vehicle.**

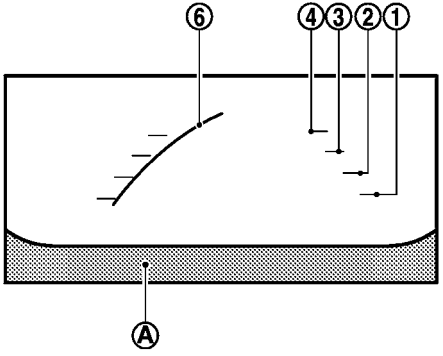

Front View

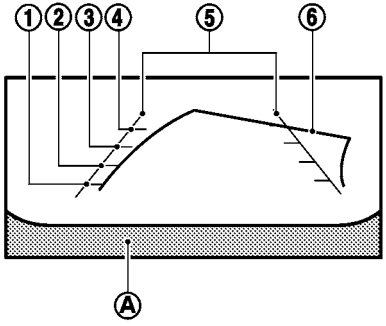

Rear View

Front and rear view:

Guiding lines that indicate the approximate vehicle width and distance to objects with reference to the vehicle body lines Ⓐ are displayed on the monitor.

Distance guide lines

Indicate distances from the vehicle body:

- Red line ①: approximately 1.5 ft (0.5 m)
- Yellow lines ②: approximately 3 ft (1 m)
- Green lines ③ : approximately 7 ft (2 m)
- Green lines ④ : approximately 10 ft (3 m)

Vehicle width guide lines ⑤

Indicate the approximate vehicle width when backing up.

Predicted course lines ⑥

Indicate the predicted course when operating the vehicle. The predicted course lines will be displayed on the monitor when the steering wheel is turned. The predicted course lines will move depending on how much the steering wheel is turned and may not be displayed while the steering wheel is in the straight-ahead position. The front view will not be displayed when the vehicle speed is above 6 mph (10 km/h).

NOTE:
When the monitor displays the front view and the steering wheel turns about 90 degrees or less from the straight-ahead position, both the right and left predicted course lines ⑥ are displayed. When the steering wheel turns about 90 degrees or more, a line is displayed only on the opposite side of the turn.

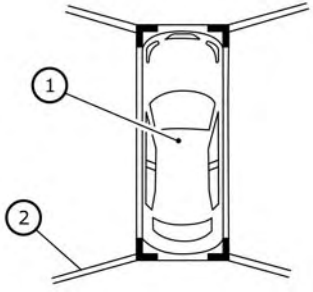

Birds-eye view:

The bird's-eye view shows the overhead view of the vehicle, which helps confirm the vehicle position and the predicted course to a parking space. The vehicle icon ① shows the position of the vehicle. Note that the apparent distance between objects viewed in the bird's-eye view may differ somewhat from the actual distance to the vehicle.

The areas that the cameras cannot cover ② are indicated in black.

After the EV system is placed in the ON position, the non-viewable areas ② are highlighted in yellow for several seconds after the bird's-eye view is displayed. It will be shown only the first time after the power switch is placed in the ON position.

WARNING

- **Objects in the bird's-eye view will appear further than the actual distance.**
- **Tall objects, such as a curb or vehicle, may be misaligned or not displayed at the seam of the views.**
- **Objects that are above the camera cannot be displayed.**
- **The view for the bird's-eye view may be misaligned when the camera position alters.**
- **A line on the ground may be misaligned and is not seen as being straight at the seam of the views. The misalignment will increase as the line proceeds away from the vehicle.**

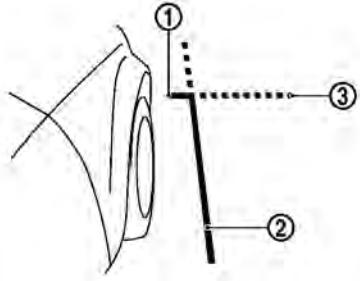

Front-side view:

Guiding lines

Guiding lines that indicate the approximate width and the front end of the vehicle are displayed on the monitor.

The front-of-vehicle line ① shows the front part of the vehicle.

The side-of-vehicle line ② shows the approximate vehicle width including the outside mirrors.

The extensions ③ of both the front ① and side ② lines are shown with a green dotted line.

DIFFERENCE BETWEEN PREDICTED AND ACTUAL DISTANCES

The displayed guidelines and their locations on the ground are for approximate reference only. Objects on uphill or downhill surfaces or projecting objects will be actually located at distances different from those displayed in the monitor relative to the guidelines (refer to illustrations). When in doubt, turn around and view the objects as you are backing up, or park and exit the vehicle to view the positioning of objects behind the vehicle.

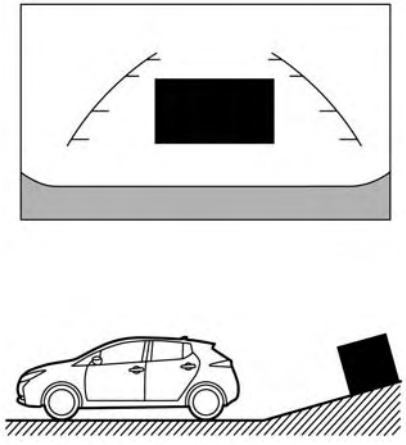

Backing up on a steep uphill

When backing up the vehicle up a hill, the distance guide lines and the vehicle width guide lines are shown closer than the actual distance. Note that any object on the hill is further than it appears on the monitor.

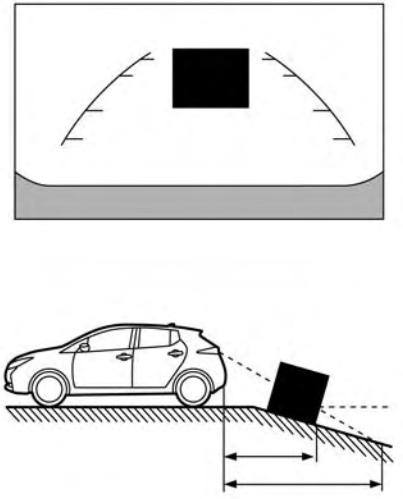

Backing up on a steep downhill

When backing up the vehicle down a hill, the distance guide lines and the vehicle width guide lines are shown farther than the actual distance. Note that any object on the hill is closer than it appears on the monitor.

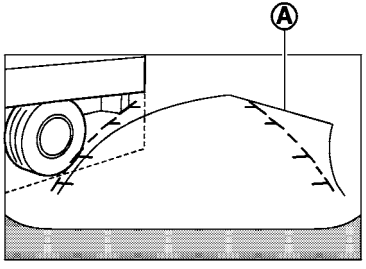

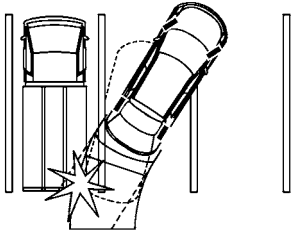

Backing up near a projecting object

The predicted course lines Ⓐ do not touch the object in the display. However, the vehicle may hit the object if it projects over the actual backing up course.

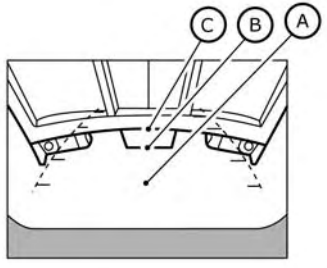

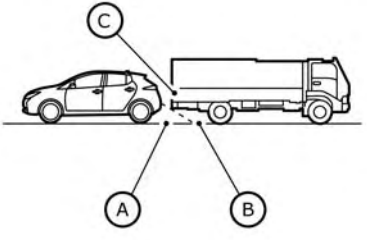

Backing up behind a projecting object

The position Ⓒ is shown farther than the position Ⓑ in the display. However, the position Ⓒ is actually at the same distance as the position Ⓐ. The vehicle may hit the object when backing up to the position Ⓐ if the object projects over the actual backing up course.

HOW TO PARK WITH PREDICTED COURSE LINES

WARNING

- **If the tires are replaced with different sized tires, the predicted course lines may be displayed incorrectly.**
- **On a snow-covered or slippery road, there may be a difference between the predicted course line and the actual course line.**
- **If the battery is disconnected or becomes discharged, the predicted course lines may be displayed incorrectly. If this occurs, please perform the following procedures:**
  - Turn the steering wheel from lock to lock while the EV (electric vehicle) System is running.
  - Drive the vehicle on a straight road for more than 5 minutes.
- **When the steering wheel is turned with the power switch in the ACC position, the predicted course lines may be displayed incorrectly.**

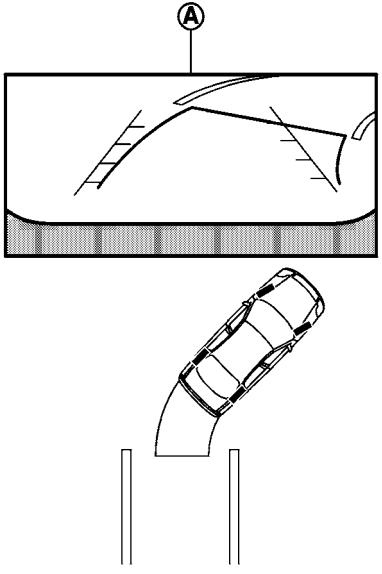

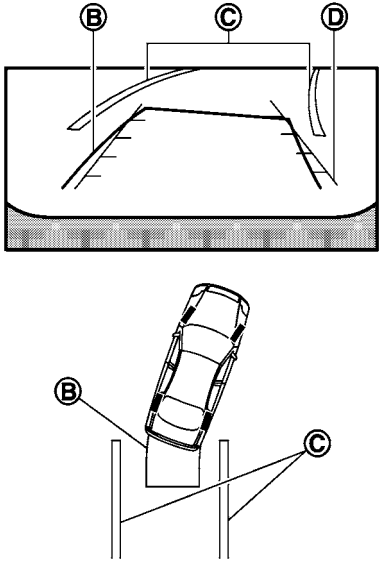

1. Visually check that the parking space is safe before parking your vehicle.
2. The rear view of the vehicle is displayed on the screen Ⓐ when the shift lever is moved to the R (Reverse) position.
3. Slowly back up the vehicle adjusting the steering wheel so that the predicted course lines Ⓑ enter the parking space Ⓒ .
4. Maneuver the steering wheel to make the vehicle width guide lines Ⓓ parallel to the parking space Ⓒ while referring to the predicted course lines.
5. When the vehicle is parked in the space completely, move the shift lever to the P (Park) position and apply the parking brake.

HOW TO SWITCH THE DISPLAY

With the power switch in the ON position, press the CAMERA button or move the shift lever to the R (Reverse) position to operate the Intelligent Around View Monitor.

The Intelligent Around View Monitor displays different split screen views depending on the position of the shift lever. Press the CAMERA button to switch between the available views.

If the shift lever is in the R (Reverse) position, the available views are:

- Rear view/bird's-eye view split screen
- Rear view/front-side view split screen

- Full screen rear view

If the shift lever is in the P (Park) position, the available views are:

- Front view/bird's-eye view split screen
- Front view/front-side view split screen

If the shift lever is in the D (Drive) position, the available views are:

- Front view/front bird's-eye view split screen
- Front view/front-side view split screen

The display will switch from the Intelligent Around View Monitor screen when:

- The shift lever is in the D (Drive) position and the vehicle speed increases above approximately 6 mph (10 km/h).
- A different screen is selected.

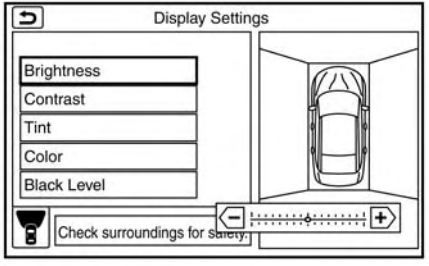

ADJUSTING THE SCREEN

1. Touch the touch-screen display with the Intelligent Around View Monitor on.
2. Touch the "Brightness," "Contrast," "Tint," "Color," or "Black Level" key.
3. Adjust the item by touching the + or — key on the touch-screen display.

NOTE:
Do not adjust any of the display settings of the Intelligent Around View Monitor while the vehicle is moving. Make sure the parking brake is firmly applied.

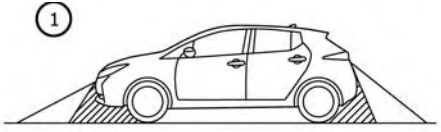

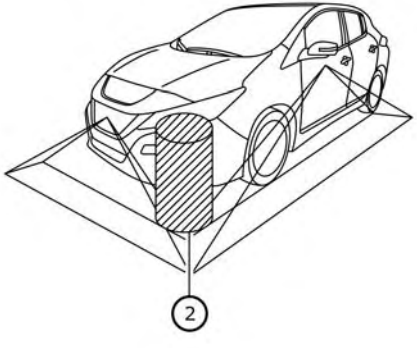

INTELLIGENT AROUND VIEW MONITOR SYSTEM LIMITATIONS

WARNING

Listed below are the system limitations for Intelligent Around View Monitor. Failure to operate the vehicle in accordance with these system limitations could result in serious injury or death.

- **Do not use the Intelligent Around View Monitor with the outside mirrors in the stored position, and make sure that the rear hatch is securely closed when operating the vehicle using the Intelligent Around View Monitor.**
- **The apparent distance between objects viewed on the Intelligent Around View Monitor differs from the actual distance.**
- **The cameras are installed on the front grille, the outside mirrors and above the rear license plate. Do not put anything on the vehicle that covers the cameras.**
- **When washing the vehicle with high pressure water, be sure not to spray it around the cameras. Otherwise, water may enter the camera unit causing water condensation on the lens, a malfunction, fire or an electric shock.**
- **Do not strike the cameras. They are precision instruments. Doing so could cause a malfunction or cause damage resulting in a fire or an electric shock.**

There are some areas where the system will not show objects and the system does not warn of moving objects. When in the front or rear view display, an object below the bumper or on the ground may not be viewed ①. When in the bird's-eye view, a tall object near the seam ② of the camera viewing areas will not appear in the monitor.

The following are operating limitations and do not represent a system malfunction:

- There may be a delay when switching between views.
- When the temperature is extremely high or low, the screen may not display objects clearly.
- When strong light directly shines on the camera, objects may not be displayed clearly.
- The screen may flicker under fluorescent light.

- The colors of objects on the Intelligent Around View Monitor may differ somewhat from the actual color of objects.
- Objects on the Intelligent Around View Monitor may not be clear and the color of the object may differ in a dark environment.
- There may be differences in sharpness between each camera view of the bird's-eye view.
- Do not use wax on the camera lens. Wipe off any wax with a clean cloth that has been dampened with a diluted mild cleaning agent, then wipe with a dry cloth.

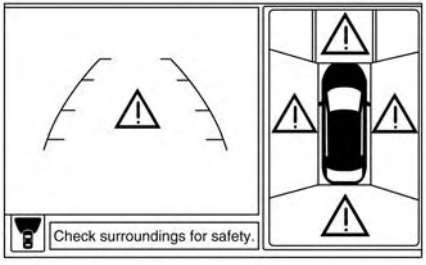

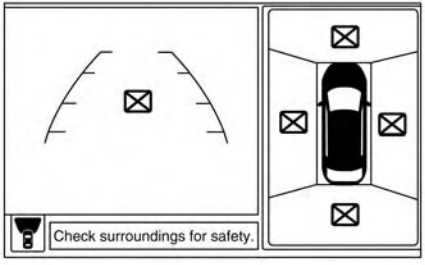

System temporarily unavailable

When the "!" icon is displayed on the screen, there are abnormal conditions in the Around View® Monitor. This will not hinder normal driving operation but the system should be inspected. It is recommended that you visit a NISSAN certified LEAF dealer for this service.

When the "[X]" icon is displayed on the screen, the camera image may be receiving temporary electronic disturbances from surrounding devices. This will not hinder normal driving operation but the system should be inspected if it occurs frequently. It is recommended that you visit a NISSAN certified LEAF dealer for this service.

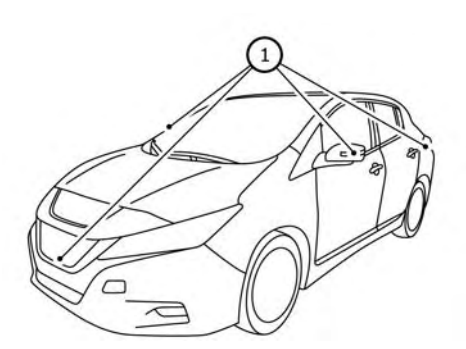

If dirt, rain or snow accumulates on any of the cameras ① , the Intelligent Around View Monitor may not display objects clearly. Clean the camera by wiping with a cloth dampened with a diluted mild cleaning agent and then wiping with a dry cloth.

SYSTEM MAINTENANCE

CAUTION

- **Do not use alcohol, benzine or thinner to clean the camera. This will cause discoloration.**
- **Do not damage the cameras as the monitor screen may be adversely affected.**

MOVING OBJECT DETECTION (IF SO EQUIPPED)

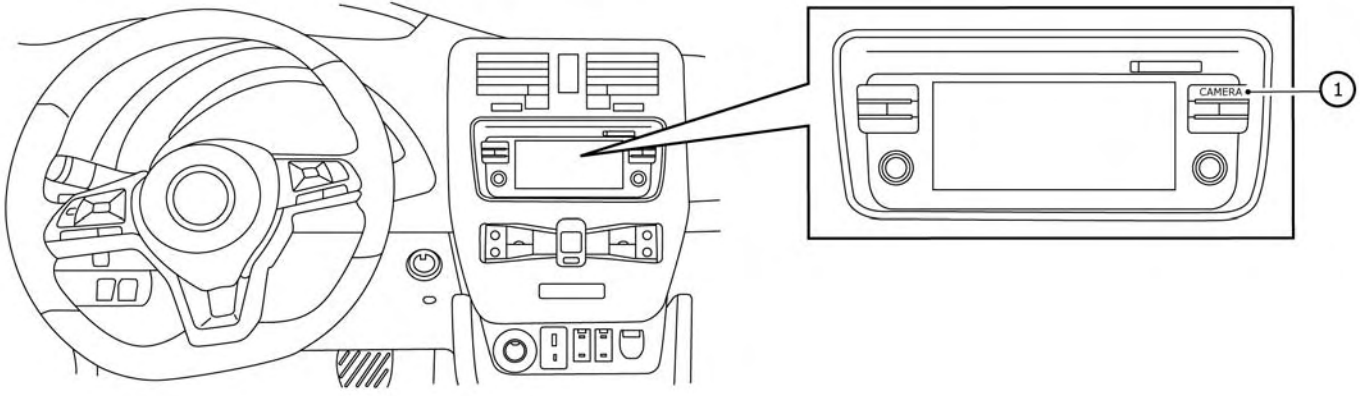

1. CAMERA button

WARNING

- **Failure to follow the warnings and instructions for proper use of the Moving object Detection (MOD) system could result in serious injury or death.**

- **The MOD system is not a substitute for proper vehicle operation and is not de-signed to prevent contact with objects surrounding the vehicle. When maneuvering, always use the outside mirrors and rear-view mirror and turn and check the surroundings to ensure it is safe to maneuver.**

- **The system is deactivated at speeds above 5 mph (8 km/h). It is reactivated at lower speeds.**
- **The MOD system is not designed to detect surrounding stationary objects.**

The MOD system can inform the driver of moving objects near the vehicle when backing out of garages, maneuvering in parking lots and in other such instances.

The MOD system detects moving objects by using image processing technology on the image shown in the display.

MOD SYSTEM OPERATION

The MOD system will turn on automatically under the following conditions:

- When the shift lever is in the R (Reverse) position.
- When vehicle speed decreases below approximately 5 mph (8 km/h) and the camera screen is displayed.

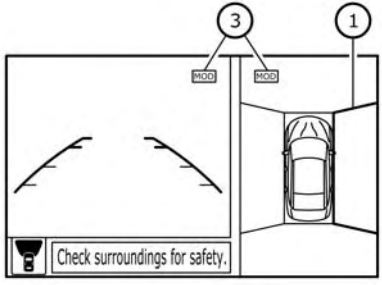

Front and bird's-eye views

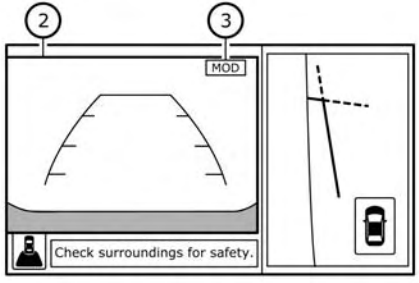

Rear and front-side views

Rear and bird's-eye views

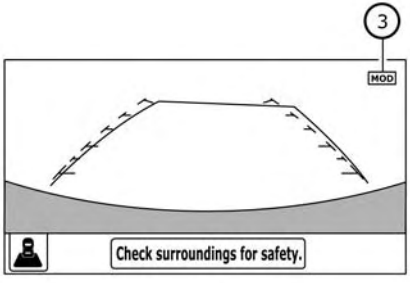

Rear-wide view

The MOD system operates in the following conditions when the camera view is displayed:

- When the shift lever is in the P (Park) or N (Neutral) position and the vehicle is stopped, the MOD system detects moving objects in the bird's-eye view. The MOD system will not operate if the outside mirrors are moving in or out, in the stowed position, or if either front door is opened.
- When the shift lever is in the D (Drive) position and the vehicle speed is below approximately 5 mph (8 km/h), the MOD system detects moving objects in the front view.
- When the shift lever is in the R (Reverse) position and the vehicle speed is below approximately 5 mph (8 km/h), the MOD system detects moving objects in the rear view. The MOD system will not operate if the rear hatch is open.

The MOD system does not detect moving objects in the front-side view. The MOD icon is not displayed on the screen when in this view.

When the MOD system detects moving objects near the vehicle, a chime will be heard and a yellow frame will be displayed on the view where the objects are detected. While the MOD system continues to detect moving objects, the yellow frame continues to be displayed.

NOTE:
While the Rear Cross Traffic Alert chime (if so equipped) is beeping, the MOD system does not chime.

In the bird's-eye view, the yellow frame ① is displayed on each camera image (front, rear, right, left) depending on where moving objects are detected.

The yellow frame ② is displayed on each view in the front view and rear view modes.

A blue MOD icon ③ is displayed in the view where the MOD system is operative. A gray MOD icon is displayed in the view where the MOD system is not operative.

If the MOD system is turned off, the MOD icon ③ is not displayed.

TURNING MOD ON AND OFF

Some vehicles include the option to allow the MOD system to be turned on or off in the vehicle information display.

To turn the MOD system on or off:

1. Using either the ◀ or ▶ menu control switch on the steering wheel to select "Settings" and press the OK button.
2. Select "Driver Assistance" and press the OK button.
3. Select "Parking Aids" and press the OK button.
4. Toggle ON or OFF "Moving Object" using the OK button.

MOD SYSTEM LIMITATIONS

WARNING

Listed below are the system limitations for MOD. Failure to operate the vehicle in accordance with these system limitations could result in serious injury or death.

- **Do not use the MOD system when towing a trailer. The system may not function properly.**
- **Excessive noise (for example, audio system volume or open vehicle window) will interfere with the chime sound, and it may not be heard.**

- **The MOD system performance will be limited according to environmental conditions and surrounding objects such as:**
  - **When there is low contrast between background and the moving objects.**
  - **When there is a blinking source of light.**
  - **When strong light such as another vehicle's headlight or sunlight is present.**
  - **When camera orientation is not in its usual position, such as when a mirror is folded.**
  - **When there is dirt, water drops or snow on the camera lens.**
  - **When the position of the moving objects in the display is not changed.**
- **The MOD system might detect flowing water droplets on the camera lens, white smoke from the muffler, moving shadows, etc.**
- **The MOD system may not function properly depending on the speed, direction, distance or shape of the moving objects.**
- **If your vehicle sustains damage to the parts where the camera is installed, leaving it misaligned or bent, the sensing zone may be altered and the MOD system may not detect objects properly.**
- **When the temperature is extremely high or low, the screen may not display objects clearly. This is not a malfunction.**

NOTE:

The blue MOD icon will change to orange if one of the following has occurred:

- **When the system is malfunctioning.**
- **When the component temperature reaches a high level (icon will blink).**

If the icon light continues to illuminate orange, have the MOD system checked. It is recommended that you visit a NISSAN certified LEAF dealer for this service.

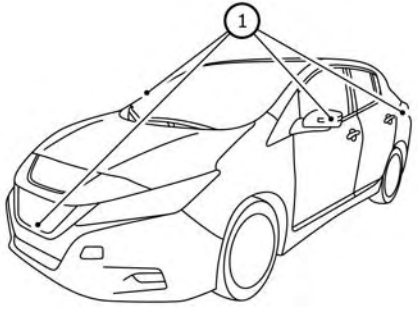

SYSTEM MAINTENANCE

CAUTION

- **Do not use alcohol, benzine or thinner to clean the camera. This will cause discoloration.**
- **Do not damage the cameras as the monitor screen may be adversely affected.**

If dirt, rain or snow accumulates on any of the cameras ① , the Intelligent Around View Monitor may not display objects clearly. Clean the camera by wiping with a cloth dampened with a diluted mild cleaning agent and then wiping with a dry cloth.

VENTS

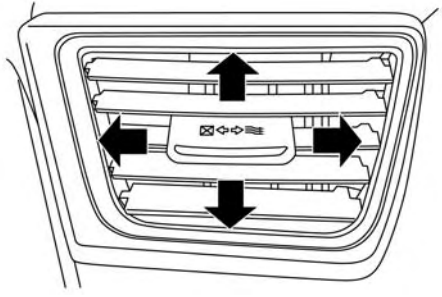

Side vent

Open/close the vents by moving the vent slide in the appropriate direction.

⊠ : This symbol indicates that the vents are closed.

≋ : This symbol indicates that the vents are open.

Adjust the air flow direction of the vents by moving the vent slide (up/down) until the desired position is achieved.

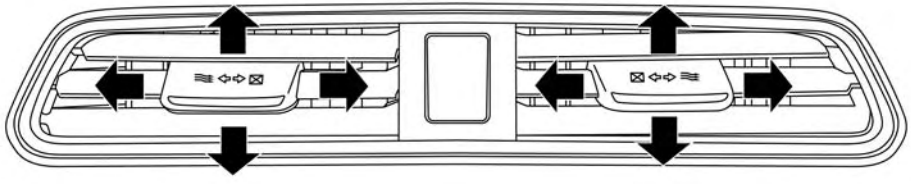

Center Vent

HEATER AND AIR CONDITIONER (AUTOMATIC)

WARNING

- **The air conditioning cooling function operates only when the power switch is in the ON position or when the READY to drive indicator light is ON.**
- **Do not leave children or adults who would normally require the assistance of others alone in your vehicle. Pets should also not be left alone. They could accidentally injure themselves or others through inadvertent operation of the vehicle. Also, on hot, sunny days, temperatures in a closed vehicle could quickly become high enough to causes severe or possibly fatal injuries to people or animals.**
- **Do not use the recirculation mode for long periods as it may cause the interior air to become stale and the windows to fog up.**

NOTE:

- **Odors from inside and outside the vehicle can build up in the air conditioner unit. Odor can enter the passenger compartment through the vents.**
- **When parking, set the heater or air conditioner controls to turn off air recirculation to allow fresh air into the passenger compartment. This should help reduce odors inside the vehicle.**

The climate control system (air conditioner and heater functions) can be operated when the READY to drive indicator light is illuminated. However, while charging, the climate control system can be used when the power switch is in the ON position.

The fan, heater and air conditioning can be turned on manually, using the timer function and using the remote climate control function.

These functions operate in the following conditions.

Power switch position	LOCK/OFF	ACC	ON	READY to drive
Fan	-	-	Available	Available
Heater and air conditioner	-	-	Available*1	Available
Timer (Climate Ctrl. Timer)	Available	Available	-	-
Remote control*2	Available	Available	-	-

*1: The climate control system will only start when charging is being performed. After charging is complete, it will continue to operate if the EVSE (Electric Vehicle Supply Equipment) is connected.
*2: Models with Navigation System.

NOTE:

- **A series of operation sounds may be heard immediately after climate control ON/OFF operation. This is not a malfunction.**
- **Compressor and motor fan may suddenly start to operate during charging operation. This is not a malfunction.**
- **Condensation forms inside the air conditioning unit when the air conditioner is running, and is safely discharged underneath your vehicle. Traces of water on the ground are therefore normal. Water may drop underneath the vehicle when climate control is operating.**

DISPLAYING CLIMATE CONTROL SYSTEM STATUS SCREEN (MODELS WITH NAVIGATION SYSTEM)

Touch the Info key on the display screen, then touch the "Climate Control and Audio" key to display the climate control system status on the display screen. For additional information, please refer to the separate LEAF Navigation System Owner's Manual.

NOTE:

- **If the READY to drive indicator light is illuminated and the EVSE (Electric Vehicle Supply Equipment) is connected to the vehicle, the power switch will change to the ON position. At the same time, the climate control system will stop operating. However, the fan will continue to operate. If you want to turn on climate control again, place the power switch in the OFF position and then place it in the ON position again after confirming that the vehicle has started charging.**
- **When the power switch is in the ON position, if the power supply from the EVSE (Electric Vehicle Supply Equipment) is interrupted due to an electrical outage, etc., the system will operate in the following ways.**
  - **If it occurs while charging is being performed:**
    The climate control system will stop once. If the power supply is restored within approximately 5 minutes, the climate control system will restart. However, if more than 5 minutes have elapsed, the climate control system will not restart.
  - **If it occurs after charging has finished:**
    The climate control system will stop.

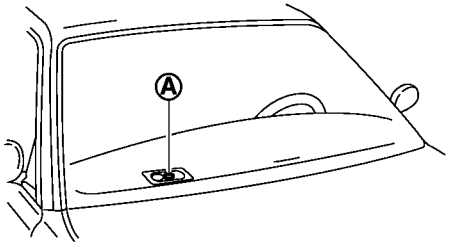

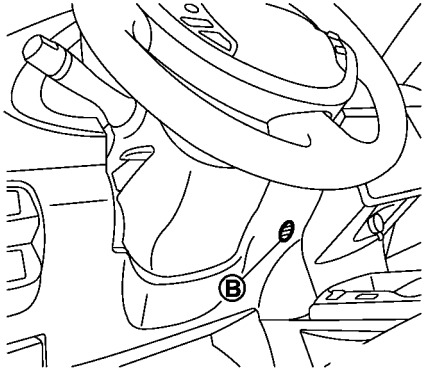

OPERATING TIPS

- The automatic climate control is equipped with sensors as illustrated. The sensors Ⓐ and Ⓑ help maintain a constant temperature. Do not put anything on or around these sensors.
- Power consumption of the climate control system varies depending on the outside temperature and the temperature set for the climate control system. Power consumption increases if the interior temperature is cooled down too much in summer or if it warmed up too much in winter. This will result in a reduced driving range.
- Using the AUTO mode will help reduce the power consumption of the climate control.
- When the AUTO button is pressed, the AUTO indicator illuminates. The HEAT button indicator and the A/C button indicator lights turn off.
- If any of the MODE, A/C, HEAT, fan speed control, front defroster is pushed when the AUTO indicator illuminates, the AUTO indicator will be turned off.
- If the charge connector is connected to the vehicle when it is in the READY to drive mode and the air conditioner or heater is on, the power switch automatically changes to the ON position. The climate control system automatically turns off the heater or air conditioner and switches to the air recirculation mode. Place the power switch in the off position to begin charging. Turn on the desired climate control function.
- For normal charge, the climate control system is operative when charging operation is complete. For quick charge however, the climate control system stops operating when charging operation stops.
- The climate control timer or remote climate control (for models with Navigation System) may fog up windows depending on the set temperature (for models with Navigation System) or outside temperature.
- When turning on the seat heater switch prior to operating the climate control timer or the remote climate control (for models with Navigation System), the seat heater will also turn on automatically when the outside temperature is low.

IN-CABIN MICROFILTER

The climate control system is equipped with an in-cabin microfilter which collects dirt, dust etc. To make sure the air conditioner heats defogs, and ventilates efficiently, replace the filter regularly. To replace the filter, it is recommended that you visit a NISSAN certified LEAF dealer.

The filter should be replaced if the air flow decreases significantly or if windows fog up easily when operating the climate control system.

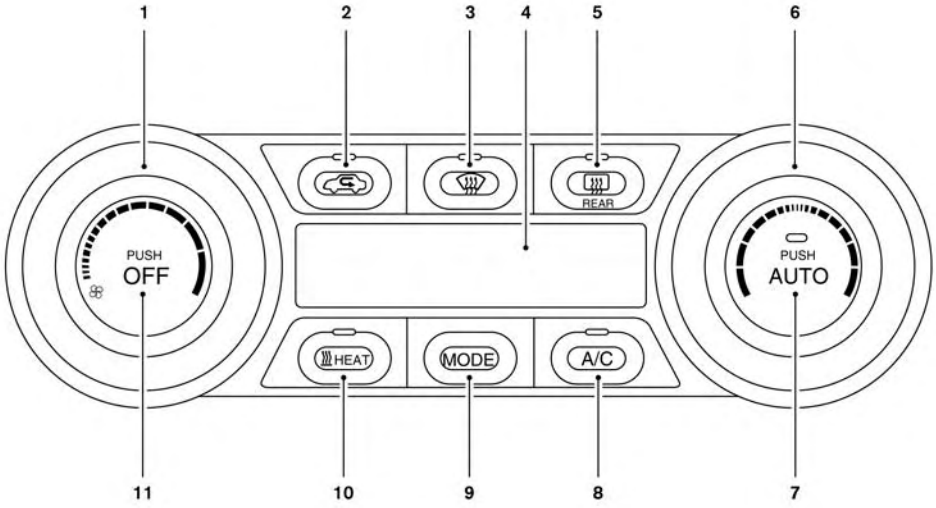

AUTOMATIC CLIMATE CONTROL (MODELS WITHOUT NAVIGATION SYSTEM)

1. fan speed control dial
2. intake air control button
3. front defroster button
4. Climate Ctrl. display
5. Rear window and outside mirror (if so equipped) defroster switch
6. Temperature control dial
7. AUTO climate control ON button
8. A/C (air conditioner) button
9. MODE (manual air flow control) button

10. HEAT button
11. Climate control system OFF button

Automatic operation (AUTO)

The AUTO mode may be used year-round as the system automatically controls constant temperature, air flow distribution and fan speed.

1. Press the AUTO button. The AUTO indicator will be illuminated.
2. Turn the temperature control dial to set the desired temperature.

When any of the following functions are operated, the AUTO indicator will turn off.

- The HEAT or A/C button is pressed.
- The fan speed control or ventilator air flow control is operated.

However, the functions that were not operated continue operating in AUTO mode.

NOTE:

- **If the fan speed control dial, MODE button, or intake air control button is operated while AUTO is in use, all the other buttons operate in AUTO mode.**
- **While the AUTO indicator is illuminated, electric power consumption of the air conditioner can be economized compared to the amount consumed while the AUTO indicator is not illuminated.**

The HEAT indicator light and the A/C indicator light illuminates according to the operation modes of the climate control system.

Operation mode	A/C indicator	HEAT indicator
Cooling (HEAT off)	ON	OFF
Heating (A/C off)	OFF	ON

Manual operation

The manual mode can be used to control the heater and air conditioner to your desired temperature.

The HEAT indicator light and the A/C indicator light illuminates according to the operation modes.

Operation mode	A/C indicator	HEAT indicator
Cooling (HEAT off)	ON	OFF
Dehumidified heating	ON	ON
Heating (A/C off)	OFF	ON
Ventilation	OFF	OFF

Cooling:

1. Press the A/C button to illuminate the A/C indicator light.
2. Press the HEAT button to turn off the HEAT indicator light.

- Do not set the temperature higher than the outside air temperature. Doing so may prevent the temperature from being controlled properly.
- A visible mist may be seen coming from the ventilators in hot, humid conditions as the air is cooled rapidly. This does not indicate a malfunction.

Dehumidified heating:

1. Press the A/C button to illuminate the A/C indicator light.
2. Press the HEAT button to illuminate the HEAT indicator light

NOTE:

Electric power consumption of climate control increases while A/C button indicator and HEAT button indicator simultaneously illuminate. As a result, the driving range may be decreased.

Heating (A/C off):

1. Press the HEAT button to illuminate the HEAT indicator light.
2. Press the A/C button to turn off the A/C indicator light.

- Do not set temperature lower than the outside air temperature. Doing so may prevent the temperature from being controlled properly.
- If the windows fog up, use dehumidified heating instead of the A/C off heating.

Ventilation:

Press the HEAT button and A/C button if the indicator lights are on so that both indicator lights turn off.

NOTE:

- **The ventilation mode requires a lower power consumption, so cruising distance will increase.**
- **In ventilation mode, temperature is not indicated on the air conditioner display.**

Dehumidified defrosting/defogging:

Press the front defroster button (the indicator light will illuminate).

- To remove moisture or fog on the front window quickly, set the temperature to the high temperature and the fan speed to their maximum level.
- After the windshield is cleared, press the front defroster button again (the indicator light will turn off).
- When the front defroster button is pressed, the air conditioner will automatically turn on to defog the windshield. The outside air recirculation mode will be selected to improve the defogging performance.

Fan speed control:

Turn the fan speed control dial to manually control the fan speed.

Press the AUTO button to change the fan speed to the automatic mode.

Air flow control:

Press the MODE button to change the air flow mode.

- — Air flows from the center and side ventilators.
- — Air flows from the center and side ventilators and foot outlets.
- — Air flows mainly from the foot outlets.
- — Air flows from the defroster outlets and foot outlets.
- — Air flows from the defroster vents.

Temperature control:

Turn the temperature control dial to set the desired temperature.

Recirculation:

Press the intake air control button to change the air circulation mode. When the indicator light illuminates, the flowing air is recirculated inside the vehicle.

When the outside temperature exceeds 70°F (21°C) the air conditioning system may default to air recirculation mode automatically to reduce overall power consumption.

To exit air recirculation mode, deselect the air recirculation button (indicator will turn off) to enter fresh mode.

Fresh air:

Press the intake air control button to change the air circulation mode. When the indicator light does not illuminate, the flowing air is drawn from outside the vehicle.

Automatic air intake control:

In the AUTO mode, the intake air will be controlled automatically. When the outside temperature exceeds 70°F (21°C), the air conditioning system may default to air recirculation mode automatically to reduce overall power consumption.

To set the automatic control mode, press and hold the intake air control button. The indicator light will blink twice and the inside/outside circulation will then be controlled automatically. When in automatic mode, the indicator light will come on when inside air recirculation is active.

Rear window and outside mirror (if so equipped) defroster switch:

For additional information, refer to "Rear window and outside mirror (if so equipped) defroster switch" in the "Instruments and controls" section of this manual

To turn the system off

To turn off the climate control, press the Climate control system OFF button. The same operating mode (Heater or A/C) that was active when the system is turned off is active when system is turned back on.

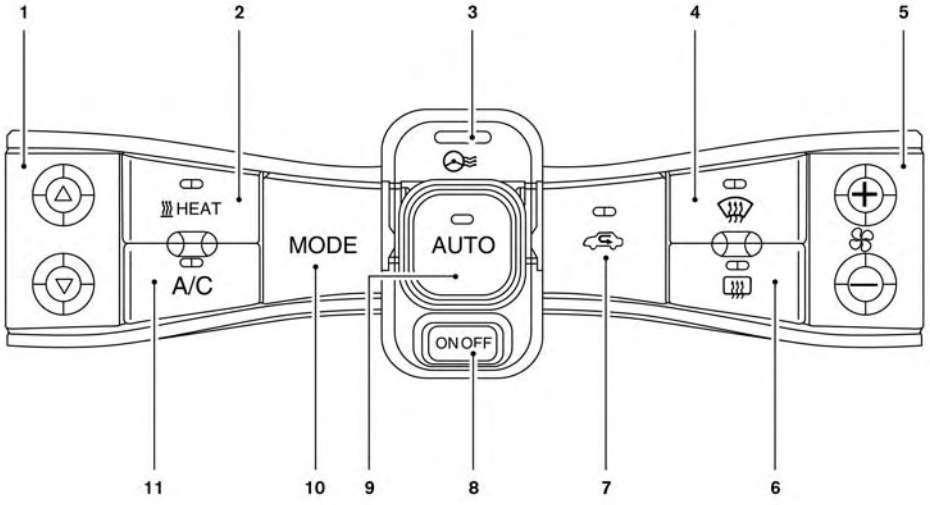

AUTOMATIC CLIMATE CONTROL (MODELS WITH NAVIGATION SYSTEM)

1. Temperature control button
2. HEAT button
3. Climate Ctrl. Timer indicator
4. front defroster button
5. fan speed control button
6. Rear window and outside mirror defroster switch
7. intake air control button
8. Climate control system ON·OFF button
9. AUTO climate control ON button
10. MODE (manual air flow control) button
11. A/C (air conditioner) ON·OFF button

Automatic operation (AUTO)

The AUTO mode may be used year-round as the system automatically controls constant temperature, air flow distribution and fan speed.

1. Press the AUTO button. The AUTO indicator will be illuminated.
2. Press the temperature control button to set the desired temperature.

When any of the following functions are operated, the AUTO indicator will turn off.

- The HEAT or A/C button is pressed.
- The fan speed control or ventilator air flow control is operated.

However, the functions that were not operated continue operating in AUTO mode.

NOTE:

- **If the fan speed control button, MODE button, or intake air control button is operated while AUTO is in use, all the other buttons operate in AUTO mode.**

- **While the AUTO indicator is illuminated, electric power consumption of the air conditioner can be economized compared to the amount consumed while the AUTO indicator is not illuminated.**

The HEAT indicator light and the A/C indicator light illuminates according to the operation modes of the climate control system.

Operation mode	A/C indicator	HEAT indicator
Cooling (HEAT off)	ON	OFF
Heating (A/C off)	OFF	ON

Manual operation

The manual mode can be used to control the heater and air conditioner to your desired temperature.

The HEAT indicator light and the A/C indicator light illuminates according to the operation modes.

Operation mode	A/C indicator	HEAT indicator
Cooling (HEAT off)	ON	OFF
Dehumidified heating	ON	ON
Heating (A/C off)	OFF	ON
Ventilation	OFF	OFF

Cooling:

1. Press the A/C button to illuminate the A/C indicator light.
2. Press the HEAT button to turn off the HEAT indicator light.

- Do not set the temperature higher than the outside air temperature. Doing so may prevent the temperature from being controlled properly.
- A visible mist may be seen coming from the ventilators in hot, humid conditions as the air is cooled rapidly. This does not indicate a malfunction.

Dehumidified heating:

1. Press the A/C button to illuminate the A/C indicator light.
2. Press the HEAT button to illuminate the HEAT indicator light

NOTE:
Electric power consumption of climate control increases while A/C button indicator and HEAT button indicator simultaneously illuminate. As a result, the driving range may be decreased.

Heating (A/C off):

1. Press the HEAT button to illuminate the HEAT indicator light.
2. Press the A/C button to turn off the A/C indicator light.

- Do not set temperature lower than the outside air temperature. Doing so may prevent the temperature from being controlled properly.
- If the windows fog up, use dehumidified heating instead of the A/C off heating.

Ventilation:

Press the HEAT button and A/C button if the indicator lights are on so that both indicator lights turn off.

NOTE:

- **The ventilation mode requires a lower power consumption, so cruising distance will increase.**
- **In ventilation mode, temperature is not indicated on the navigation monitor or on the air conditioner display.**

Dehumidified defrosting/defogging:

Press the front defroster button (the indicator light will illuminate).

- To remove moisture or fog on the front window quickly, set the temperature to the high temperature and the fan speed to their maximum level.
- After the windshield is cleared, press the front defroster button again (the indicator light will turn off).
- When the front defroster button is pressed, the air conditioner and heater will automatically turn on to defog the windshield. The outside air recirculation mode will be selected to improve the defogging performance.

Fan speed control:

Press the fan speed control button to manually control the fan speed.

Press the AUTO button to change the fan speed to the automatic mode.

Air flow control:

Press the MODE button to change the air flow mode.

— Air flows from the center and side ventilators.

— Air flows from the center and side ventilators and foot outlets.

— Air flows mainly from the foot outlets.

— Air flows from the defroster outlets and foot outlets.

— Air flows from the defroster vents.

Temperature control:

Press the temperature control buttons to set the desired temperature.

Air recirculation:

Press the intake air control button to change the air circulation mode. When the indicator light illuminates, the flowing air is recirculated inside the vehicle.

When the outside temperature exceeds 70°F (21°C) the air conditioning system may default to air recirculation mode automatically to reduce overall power consumption. To exit air recirculation mode, deselect the air recirculation button (indicator will turn off) to enter fresh mode.

Outside air circulation:

Press the intake air control button to change the air circulation mode. When the indicator light does not illuminate, the flowing air is drawn from outside the vehicle.

Automatic air intake control:

In the AUTO mode, the intake air will be controlled automatically. When the outside temperature exceeds 70°F (21°C), the air conditioning system may default to air recirculation mode automatically to reduce overall power consumption.

To set the automatic control mode, press and hold the intake air control button. The indicator light will blink twice and the inside/outside circulation will then be controlled automatically. When in automatic mode, the indicator light will come on when inside air recirculation is active.

Rear window and outside mirror (if so equipped) defroster switch:

For additional information, refer to "Rear window and outside mirror (if so equipped) defroster switch" in the "Instruments and controls" section of this manual

To turn the system off

To turn off the climate control, press the Climate control system ON·OFF button. The same operating mode (Heater or A/C) that was active when the system is turned off is active when system is turned back on.

CLIMATE CTRL. TIMER

This function pre-heats or pre-cools the passenger compartment of the vehicle to the temperature before driving. This helps reduce power consumption from the Li-ion battery.

The Climate Ctrl. Timer operates the air conditioner using power from the charger or the Li-ion battery. While the charging connector is connected to the vehicle, electric power from the Li-ion battery is not used.

The Climate Ctrl. Timer function allows two timer settings.

Once the Climate Ctrl. Timer is set, it will complete air conditioning by the time that is set. It is not necessary to set the Climate Ctrl. Timer every day.

*models with Navigation System

WARNING

Even if the Climate Ctrl. Timer is set, the temperature in the passenger compartment may become high or low if the system automatically stops. Do not leave children or adults who would normally require the support of others alone in your vehicle. Pets should not be left alone either. On hot, sunny days, temperatures in a closed vehicle could quickly become high enough to cause severe or possibly fatal injuries to people or animals. Also on cold days, temperature in a vehicle could become low enough to cause severe or possible fatal injuries to people or animals.

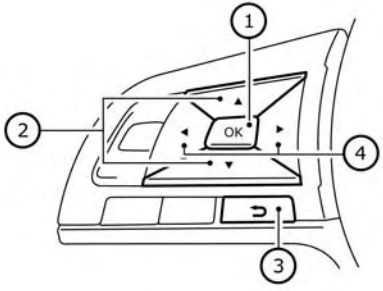

How to set Climate Ctrl. Timer

1. OK button
2. ▲ ▼ button
3. Back button
4. ◀ ▶ button

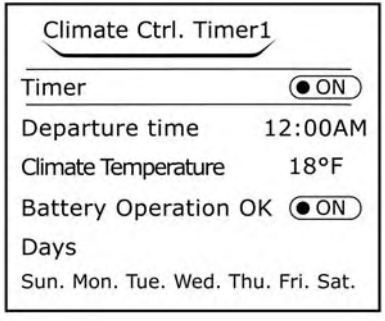

1. Push the ◀ ▶ button to select "Settings" on the vehicle information display.
2. Push the ▲ ▼ button to select "EV Settings" and then push the OK button.
3. Push the ▲ ▼ button to select "Climate Ctrl. Timer1" or "Climate Ctrl. Timer2" and then push the OK button.
4. Push the ▲ ▼ button to select "Timer" and then push the OK button and turn on the setting. The indicator light will turn on when the timer setting is turned on.
5. Push the ▲ ▼ button to select "Departure time" and then push the OK button.
6. Push the ▲ ▼ button to set "Hour" and then push the OK button.
7. Push the ▲ ▼ button to set "Minute" and then push the OK button. The setting can be changed with an increment step of 10 minutes.
8. Push the ▲ ▼ button to select "Climate Temperature" and then push the OK button.
9. Push the ▲ ▼ button to set Climate Temperature and then push the OK button.
10. * Push the ▲ ▼ button to select "Days" and then push the OK button. The current day of the week is displayed with an underline.

    Push the ▲ ▼ button to select the days of the week you wish to activate the Climate Control system and then push the OK button. The indicator light of the selected button will turn on.
11. * After setting the day of the week, push the Back button and return to the previous screen.

    The set day of the week is lit in white.
12. After the setting is complete, place the power switch in the OFF position, and then connect the charge connector to the vehicle.

* models with Navigation System

INFO

The Climate Ctrl. Timer does not activate if the charge connector is not connected to the vehicle. When the "Battery Operation OK" is turned on and the charging connector is not connected to the vehicle, the Climate Ctrl. Timer will activate for 15 minutes.

When the outside temperature is high, the interior temperature may not reach the set temperature within the 15 minutes.

Turn "Battery Operation OK" to OFF when it is not necessary to operate air conditioning timer in order to prevent Li-ion battery from discharging.

For models without Navigation System, the Climate Ctrl. Timer operates repeatedly every day once it is turned on.

Operating tips for using Climate Ctrl. Timer

- The Climate Ctrl. Timer will only start when the power switch is in the LOCK/OFF or ACC position.
- To turn off the Climate Ctrl. Timer function, turn off the "Climate Ctrl. Timer1" and "Climate Ctrl. Timer2" setting in the video information display using the ▲ ▼ button on the steering wheel. The start and stop time settings will not be deleted even if the Climate Ctrl. Timer function is turned off.
- While the Climate Ctrl. Timer is operating, the Climate Ctrl. Timer indicator and the charging status indicator lights flash. If the Climate Ctrl. Timer is set to activate, the Climate Ctrl. Timer indicator illuminates.*
- If the Climate Ctrl. Timer starts operating while the vehicle is being charged, the time required for charging will be longer.
- Operating the Climate Ctrl. Timer or remote climate control in an environment where the temperature is low may decrease the rate of battery charge.
- Timer setting can also be changed while Climate Ctrl. Timer is operated. When the power position is switched to OFF, the air conditioner starts or enters waiting mode depending on the new timer settings.
- When the difference in temperature between the air conditioner setting temperature and the temperature outside the vehicle is large, the temperature inside the vehicle may not be maintained at the setting temperature.
- The charging status indicator lights illuminate in a specific pattern when the Li-ion battery warmer operates. The charging status indicator lights use the same pattern to indicate 12-volt battery charging, Climate Ctrl. Timer operation or Remote Climate Control operation. The charging status indicator lights do not change if the Li-ion battery warmer operates at the same time as the above features.
- The temperature in the passenger compartment may not be comfortable if entering the vehicle too soon before or too long after the scheduled time of departure.
- Air conditioning is limited to the capacity of the electric power when the charge connector is connected. Therefore, the temperature may not reach the set temperature due to limitations in air conditioning performance, if ambient temperature is excessively high or low, or if the charge connector is connected to a 120-volt plug outlet.
- The Climate Ctrl. Timer operates the climate control function so that a comfortable temperature is provided in the passenger compartment at the scheduled time of departure. The climate control is set to stop at the scheduled time of departure.
- Depending on the facilities of charging station, there may be time when it is not available for charging. Confirm the availability of the charging facility before setting the Climate Ctrl. Timer. Be sure that the power switch of the charger is turned on when setting the Climate Ctrl. Timer.
- When the power switch is turned OFF after changing the setting, the new setting will be applied.

*models with Navigation System

Remote climate control

This vehicle incorporates a communication device that is called a TCU (Telematics Control Unit). The communication connection between this unit and Nissan Data Center allows for various remote function services.

Even when away from the vehicle, climate control can be started by accessing the Nissan Data Center website using a cellular phone or a personal computer.

When operation is started, or at the set start time, the Nissan Data Center accesses the vehicle. When the vehicle receives a command for remote operation, the climate control immediately turns ON and operates for the specified period of time. Confirmation of the ON/OFF of the climate control operation can be checked by accessing the website or by e-mail.

Completing registration for the NissanConnect® EV and Services is necessary before using the service. For additional information, refer to the separate LEAF Navigation System Owner's Manual.

WARNING

- **Radio waves could adversely affect electric medical equipment. For additional information, refer to your electric medical equipment manufacturer for the possible effect on pacemakers before using the remote climate control.**
- **Even if the remote climate control is set, the temperature in the passenger room may become high if the system automatically stops. Do not leave children or adults who would normally require the support of others alone in your vehicle. Pets should not be left alone either. On hot, sunny days, temperatures in a closed vehicle could quickly become high enough to cause severe or possibly fatal injuries to people or animals.**

NOTE:

- **To check the Li-ion battery charging status using an internet enabled smart phone or personal computer.**
  - **The vehicle must be located in a cellular phone coverage area.**
  - **The cellular phone must be located in an area with cellular phone coverage.**
  - **The computer must be connected to the internet.**
- **Some cellular phones are not compatible with this system and cannot be used to check the Li-ion battery charging status. Confirm this beforehand.**

Operating tips

- When the charge connector is connected, the climate control operates using electric power. When the charge connector is disconnected from the vehicle, the climate control operates using vehicle battery electric power.
- The climate control can be operated for a maximum of 2 hours when the charge connector is connected to the vehicle, or a maximum of 15 minutes when the charge connector is disconnected.

- The remote climate control will only start to operate when the power switch is in the LOCK/OFF or ACC position.
- Remote climate control operation is not available when the vehicle is in an area of cellular communication range.
- Communication becomes unavailable when the vehicle is not used for two weeks or more. When the power switch is placed in the ON position, communication with the Nissan Data Center can be restored.
- Air conditioning is limited to the capacity of the electric power when the charge connector is connected to the vehicle. Therefore, the temperature may not reach a comfortable level due to performance of the air conditioning being limited, if the outside temperature is excessively high or low, or if the charge connector is connected to a 110 – 120-volt outlet.
- If the power switch is in the ON position or the charge connector is disconnected, while the remote climate control is being operated, remote climate control operation is automatically stopped and an e-mail is sent.
- If remote climate control operation is started while the vehicle is in normal charge mode, the climate control operates in climate control priority mode and charging is continued.
- If remote climate control operation is started and charging is stopped while the vehicle is in quick charge mode, climate control operation is also stopped.
- If the quick charge connector is connected and charging is not performed, remote climate control operation starts using the battery electric power of the vehicle.

SERVICING CLIMATE CONTROL

The climate control system in your NISSAN is charged with a refrigerant designed with the environment in mind. This refrigerant will not harm the earth's ozone layer. Special charging equipment and lubricant are required when servicing your NISSAN climate control. Using improper refrigerants or lubricants will cause severe damage to your climate control system. For additional information, refer to "Recommended fluids/lubricants and capacities" in the "Technical and consumer information" section.

It is recommended that you visit a NISSAN certified LEAF dealer to service your environmentally friendly climate control system.

AUDIO SYSTEM (MODELS WITHOUT NAVIGATION SYSTEM)

RADIO

Push the power switch to the ACC or ON position and press the radio band select button to turn on the radio. If you listen to the radio while the READY to drive indicator light is off, the power switch should be pushed to the ACC position.

Radio reception is affected by station signal strength, distance from radio transmitter, buildings, bridges, mountains and other external influences. Intermittent changes in reception quality normally are caused by these external influences.

Using a cellular phone in or near the vehicle may influence radio reception quality.

Radio reception

Your NISSAN radio system is equipped with state-of-the-art electronic circuits to enhance radio reception. These circuits are designed to extend reception range, and to enhance the quality of that reception.

However, there are some general characteristics of both FM and AM radio signals that can affect radio reception quality in a moving vehicle, even when the finest equipment is used. These characteristics are completely normal in a given reception area and do not indicate any malfunction in your NISSAN radio system.

Reception conditions will constantly change because of vehicle movement. Buildings, terrain, signal distance and interference from other vehicles can work against ideal reception. Described below are some of the factors that can affect your radio reception.

Some cellular phones or other devices may cause interference or a buzzing noise to come from the audio system speakers. Storing the device in a different location may reduce or eliminate the noise.

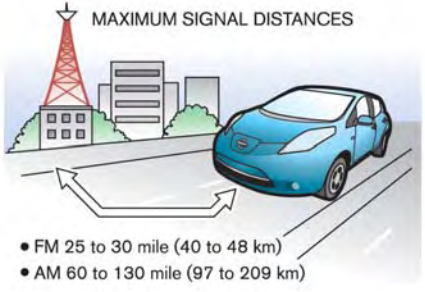

FM RADIO RECEPTION

Range: FM range is normally limited to 25 – 30 mi (40 – 48 km), with monaural (single channel) FM having slightly more range than stereo FM. External influences may sometimes interfere with FM station reception even if the FM station is within 25 mi (40 km). The strength of the FM signal is directly related to the distance between the transmitter and receiver. FM signals follow a line-of-sight path, exhibiting many of the same characteristics as light. For example, they will reflect off objects.

Fade and drift: As your vehicle moves away from a station transmitter, the signals will tend to fade and/or drift.

Static and flutter: During signal interference from buildings, large hills or due to antenna position (usually in conjunction with increased distance from the station transmitter), static or flutter can be heard. This can be reduced by adjusting the treble control to reduce treble response.

Multipath reception: Because of the reflective characteristics of FM signals, direct and reflected signals reach the receiver at the same time. The signals may cancel each other, resulting in momentary flutter or loss of sound.

AM RADIO RECEPTION

AM signals, because of their low frequency, can bend around objects and skip along the ground. In addition, the signals can be bounced off the ionosphere and bent back to earth. Because of these characteristics, AM signals are also subject to interference as they travel from transmitter to receiver.

Fading: Occurs while the vehicle is passing through freeway underpasses or in areas with many tall buildings. It can also occur for several seconds during ionospheric turbulence even in areas where no obstacles exist.

Static: Caused by thunderstorms, electrical power lines, electric signs and even traffic lights.

SATELLITE RADIO RECEPTION

When the satellite radio is used for the first time or the battery has been replaced, the satellite radio may not work properly. This is not a malfunction. Wait more than 10 minutes with satellite radio ON and the vehicle outside of any metal or large building for satellite radio to receive all of the necessary data.

No satellite radio reception is available and "NO SAT" is displayed when the SAT band option is selected unless optional satellite receiver and antenna are installed and a SiriusXM® Satellite Radio service subscription is active. Satellite radio is not available in Alaska, Hawaii and Guam.

Satellite radio performance may be affected if cargo carried on the roof blocks the satellite radio signal.

If possible, do not put cargo over the satellite antenna.

A build up of ice on the satellite radio antenna can affect satellite radio performance. Remove the ice to restore satellite radio reception.

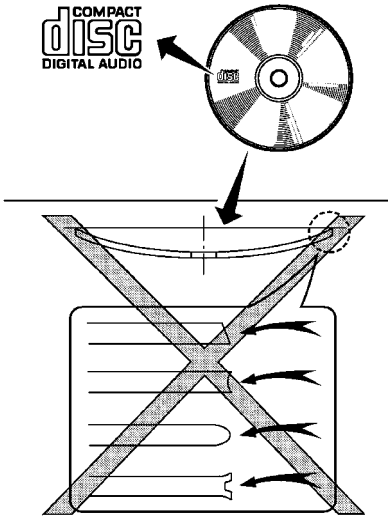

AUDIO OPERATION PRECAUTIONS

Compact disc (CD) player

CAUTION

- **Do not force a compact disc into the CD insert slot. This could damage the CD and/or CD player.**
- **Trying to load a CD with the CD door closed could damage the CD and/or CD player.**
- **Only one CD can be loaded into the CD player at a time.**

- **Only use high quality 4.7 in (12 cm) round discs that have the "COMPACT disc DIGITAL AUDIO" logo on the disc or packaging.**
- **During cold weather or rainy days, the player may malfunction due to the humidity. If this occurs, remove the CD and dehumidify or ventilate the player completely.**
- **The player may skip while driving on rough roads.**
- **The CD player sometimes cannot function when the compartment temperature is extremely high or low. Decrease/increase the temperature before use.**
- **Do not expose the CD to direct sunlight.**
- **CDs that are in poor condition or are dirty, scratched or covered with fingerprints may not work properly.**
- **The following CDs may not work properly.**
  - **Copy control compact discs (CCCD)**
  - **Recordable compact discs (CD-R)**
  - **Rewritable compact discs (CD-RW)**
- **Do not use the following CDs as they may cause the CD player to malfunction:**
  - **3.1 in (8 cm) discs with an adapter**
  - **CDs that are not round**
  - **CDs with a paper label**
  - **CDs that are warped, scratched, or have abnormal edges**
- **This audio system can only play prerecorded CDs. It has no capability to record or burn CDs.**
- **If the CD cannot be played, one of the following messages will be displayed.**

CHECK DISC:

- **Confirm that the CD is inserted correctly (the label side is facing up, etc.).**
- **Confirm that the CD is not bent or warped and it is free of scratches.**

PRESS EJECT:

This is an error due to excessive temperature inside the player. Remove the CD by pressing the EJECT button. After a short time, reinsert the CD. The CD can be played when the temperature of the player returns to normal.

UNPLAYABLE:

The file is unplayable in this audio system (only MP3 orWMA(if so equipped) CD).

Compressed audio files (MP3/WMA)

Terms

- MP3 — MP3 is short for Moving Pictures Experts Group Audio Layer 3. MP3 is the most well-known compressed digital audio file format. This format allows for near "CD quality" sound, but at a fraction of the size of normal audio files. MP3 conversion of an audio track from CD-ROM can reduce the file size by approximately a 10:1 ratio with virtually no perceptible loss in quality. MP3 compression removes the redundant and irrelevant parts of a sound signal that the human ear doesn't hear.
- WMA — Windows Media Audio (WMA)* is a compressed audio format created by Microsoft as an alternative to MP3. The WMA codec offers greater file compression than the MP3 codec, enabling storage of more digital audio tracks in the same amount of space when compared to MP3s at the same level of quality.
- Bit rate — Bit rate denotes the number of bits per second used by a digital music file. The size and quality of a compressed digital audio file is determined by the bit rate used when encoding the file.
- Sampling frequency — Sampling frequency is the rate at which the samples of a signal are converted from analog to digital (A/D conversion) per second.
- Multisession — Multisession is one of the methods for writing data to media. Writing data once to the media is called a single session, and writing more than once is called a multisession.
- ID3/WMA Tag — The ID3/WMA tag is the part of the encoded MP3 or WMA file that contains information about the digital music file such as song title, artist, encoding bit rate, track time duration, etc. ID3 tag information is displayed on the Artist/ song title line on the display.

* Windows® and Windows Media® are registered trademarks and trademarks in the United States of America and other countries of Microsoft Corporation of the USA.

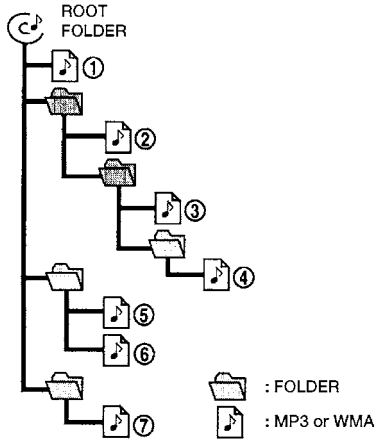

Playback order chart

Playback order

Musical playback order of a CD with MP3 or WMA files is as illustrated.

- The names of folders not containing MP3 or WMA files are not shown in the display.
- If there is a file in the top level of the disc, "Root Folder" is displayed.
- The playback order is the order in which the files were written by the writing software. Therefore, the files might not play in the desired order.

Specification chart

Supported media			CD, CD-R, CD-RW
Supported file systems			ISO9660 LEVEL1, ISO9660 LEVEL2, Apple ISO, Romeo, Joliet * ISO9660 Level 3 (packet writing) is not supported.
Supported versions*1	MP3	Version	MPEG1, MPEG2, MPEG2.5
		Sampling frequency	8 kHz - 48 kHz
		Bit rate	32 kbps - 320 kbps, VBR
	WMA	Version	WMA7, WMA8, WMA9
		Sampling frequency	32 kHz - 48 kHz
		Bit rate	32 kbps - 320 kbps, VBR
Tag information			ID3 tag VER1.0, VER1.1, VER2.2, VER2.3 (MP3 only) VER2.4
Folder levels			Folder levels: 8, Max folders: 255 (including root folder), Files: 999 (Max. 255 files for one folder)
Displayable character codes*2			01: ASCII, 02: ISO-8859-1, 03: UNICODE (UTF-16 BOM Big Endian), 04: UNICODE (UTF-16 Non-BOM Big Endian), 05: UNICODE (UTF-8)

*1 Files created with a combination of 48 kHz sampling frequency and 64 kbps bit rate cannot be played.

*2 Available codes depend on what kind of media, versions and information are going to be displayed.

Troubleshooting guide

Symptom	Cause and Countermeasure
Cannot play	Check if the disc was inserted correctly.
	Check if the disc is scratched or dirty.
	Check if there is condensation inside the player. If there is, wait until the condensation is gone (about 1 hour) before using the player.
	If there is a temperature increase error, the CD player will play correctly after it returns to the normal temperature.
	If there is a mixture of music CD files (CD-DA data) and MP3/WMA files on a CD, only the music CD files (CD-DA data) will be played.
	Files with extensions other than ".MP3",".WMA", ".mp3" or ".wma" cannot be played. In addition, the character codes and number of characters for folder names and file names should be in compliance with the specifications.
	Check if the finalization process, such as session close and disc close, is done for the disc.
	Check if the disc is protected by copyright.
Poor sound quality	Check if the disc is scratched or dirty.
	Bit rate may be too low.
It takes a relatively long time before the music starts playing.	If there are many folders or file levels on the MP3/WMA disc, or if it is a multisession disc, some time may be required before the music starts playing.
Music cuts off or skips	The writing software and hardware combination might not match, or the writing speed, writing depth, writing width, etc., might not match the specifications. Try using the slowest writing speed.
Skipping with high bit rate files	Skipping may occur with large quantities of data, such as for high bit rate data.
Moves immediately to the next song when playing	When a non-MP3/WMA file has been given an extension of ".MP3", ".WMA", ."mp3"or ".wma", or when play is prohibited by copyright protection, there will be approximately 5 seconds of no sound and then the player will skip to the next song.
Songs do not play back in the desired order	The playback order is the order in which the files were written by the writing software. Therefore, the files might not play in the desired order.

USB (Universal Serial Bus) connection port

WARNING

Do not connect, disconnect or operate the USB device while driving. Doing so can be a distraction. If distracted you could lose control of your vehicle and cause an accident or serious injury.

CAUTION

- **Do not force the USB device into the USB port. Inserting the USB device tilted or up-side-down into the port may damage the port. Make sure that the USB device is connected correctly into the USB port.**
- **Do not grab the USB port cover (if so equipped) when pulling the USB device out of the port. This could damage the port and the cover.**
- **Do not leave the USB cable in a place where it can be pulled unintentionally. Pulling the cable may damage the port.**

The vehicle is not equipped with a USB device. USB devices should be purchased separately as necessary. This system cannot be used to format USB devices. To format a USB device, use a personal computer. In some states/area, the USB device for the front seats plays only sound without images for regulatory reasons, even when the vehicle is parked.

This system supports various USB memory devices, USB hard drives and iPod® players. Some USB devices may not be supported by this system.

Partitioned USB devices may not play correctly.

Some characters used in other languages (Chinese, Japanese, etc.) may not appear properly in the display. Using English language characters with a USB device is recommended.

General notes for USB use:

For additional information refer to your device manufacturer's owner information regarding the proper use and care of the device.

Notes for iPod® use:

iPod® is a trademark of Apple Inc., registered in the U.S. and other countries.

- Improperly plugging in the iPod® may cause a checkmark to be displayed on and off (flickering). Always make sure that the iPod® is connected properly.
- An iPod® nano (1st Generation) may remain in fast forward or rewind mode if it is connected during a seek operation. In this case, please manually reset the iPod®.
- An iPod® nano (2nd Generation) will continue to fast-forward or rewind if it is disconnected during a seek operation.
- An incorrect song title may appear when the Play Mode is changed while using an iPod® nano (2nd Generation).
- Audiobooks may not play in the same order as they appear on an iPod®.
- Large video files cause slow responses in an iPod®. The vehicle center display may momentarily black out, but will soon recover.

- If an iPod® automatically selects large video files while in the shuffle mode, the vehicle center display may momentarily black out, but will soon recover.

Bluetooth® streaming audio

- Some Bluetooth® audio devices may not be recognized by the in-vehicle audio system.
- It is necessary to set up the wireless connection between a compatible Bluetooth® audio device and the in-vehicle Bluetooth® module before using the Bluetooth® audio.
- Operating procedure of the Bluetooth® audio will vary depending on the devices. Make sure how to operate your audio device before using it with this system.
- The Bluetooth® audio may be stopped under the following conditions:
  - Receiving a call on the Hands-Free Phone System.
  - Checking the connection to the hands-free phone.
- Do not place the Bluetooth® audio device in an area surrounded by metal or far away from the in-vehicle Bluetooth® module to prevent tone quality degradation and wireless connection disruption.
- While an audio device is connected through the Bluetooth® wireless connection, the battery power of the device may discharge quicker than usual.
- This system supports the Bluetooth® Audio Distribution Profile (A2DP, AVRCP).

Bluetooth® BLUETOOTH® is a trademark owned by Bluetooth SIG, Inc. and licensed to Visteon.

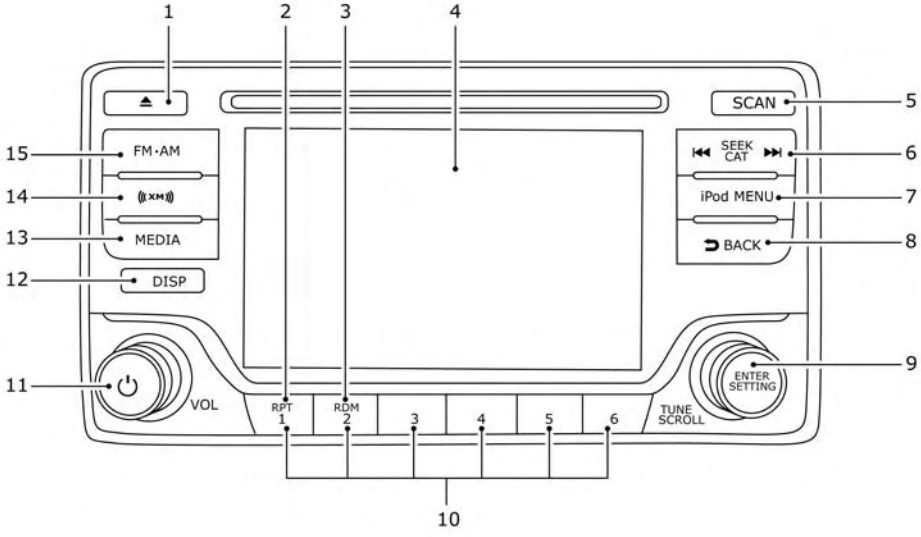

FM/AM/SAT RADIO WITH COMPACT DISC (CD) PLAYER

1. CD eject button
2. RPT (repeat) button
3. RDM (random) button
4. Display screen
5. SCAN button
6. SEEK/CAT button
7. iPod MENU button
8. BACK button
9. ENTER/SETTING button / TUNE/SCROLL knob
10. Station select (1–6) buttons
11. (power) button /VOL (volume) control knob
12. DISP button
13. MEDIA button
14. XM button*
15. FM·AM button

*No satellite radio reception is available when the XM button is pressed to access satellite radio stations unless optional satellite receiver and antenna are installed and a SiriusXM® Satellite radio service subscription is active, Satellite radio is not available in Alaska, Hawaii, and Guam.

For additional information, refer to "Audio operation precautions" regarding all operation precautions in this section.

Audio main operation

⏻ (Power)/VOL (Volume) control knob

Place the power switch in the ACC or ON position, and then press the ⏻ button while the system is off to turn on the last audio source, which was playing immediately before the system was turned off. While the system is on, pressing the ⏻ button turns the system off.

Turn the VOL control knob to adjust the volume.

This vehicle may be equipped with speed sensitive volume. When this feature is active, the audio volume changes as the driving speed changes.

ENTER/SETTING button

When the audio screen is displayed, press the ENTER/SETTING button to show the Settings screen on the display. Turn the TUNE/SCROLL knob to navigate the options and then press the ENTER/SETTING button to make a selection.

Audio		
	Bass	Adjusts the bass to the desired level.
	Treble	Adjusts the treble to the desired level.
	Balance	Adjusts the balance to the desired level. Balance adjusts the sound level between the left and right speakers.
	Fade	Adjusts the fade to the desired level. Fade adjusts the sound level between the front and rear speakers.
	Brightness	Adjust the brightness to adjust the appearance of the display screen.
	Contrast	Adjust the contrast to adjust the appearance of the display screen.
	Clock Adjust	Allows the user to set time manually. To set the clock: 1. Press the ENTER/SETTING button. 2. Turn the TUNE/SCROLL knob to select CLOCK. 3. Press the ENTER/SETTING button. 4. Turn the TUNE/SCROLL knob to select "set time". 5. Press the ENTER/SETTING button. 6. Rotate the TUNE/SCROLL knob to adjust hours. 7. Press the ENTER/SETTING button. 8. Turn the TUNE/SCROLL knob to adjust minutes. 9. Press the ENTER/SETTING button. 10. Press the ⮌ BACK button to finish.
	On-Screen Clock	Toggles ON or OFF the clock display on the upper right corner of the display screen.
	RDS Display	Toggles ON or OFF the RDS information displayed on the screen while the radio is playing.
	Speed Sens Vol. (Speed Sensitive Volume)	Adjusts the speed sensitive volume function, which increases the volume of the audio system as the speed of the vehicle increases. Set to "OFF" to disable the feature. The higher the setting, the more the volume increases in relation to vehicle speed.
	AUX Vol.	Choose a setting from 0 to +3 to control the boost of incoming auxiliary device volume. A setting of 0 provides no additional boost in volume. A setting of +3 provides the greatest boost in volume.
	Language Select	Select the desired language for the system from the available options.

Bass, treble, balance and fade can also be adjusted by pressing the ENTER/SETTING button and turning the TUNE/SCROLL control knob to select the item to adjust. When the desired item is shown on the display, turn the tuning to adjust and then press the ENTER/SETTING button until the display returns to the main audio screen. If the button is not pressed for approximately 10 seconds, the radio or CD display will automatically reappear.

DISP button

Display of the screen can be canceled by pressing the DISP button. You can then listen to music that is being played back. If you want to display the screen again, either press the DISP button once more or press the FM·AM, XM Satellite Radio or CD·AUX button.

MEDIA button

Pressing the MEDIA button will switch the displays as follows:

iPod®/USB→Bluetooth Audio→AUX→CD→iPod®/USB

BACK button

When the BACK button is pressed, it returns to the previous display.

iPod MENU button

Press the iPod MENU button while the iPod® is connected to show the iPod® operation menu on the audio display. Scroll through the menu list using the TUNE/SCROLL knob. Press the ENTER/SETTING button to select a menu item.

For additional information, refer to the iPod® Owner's Manual.

FM/AM/SAT radio operation

FM·AM band select

Pressing the radio band select button will change the band as follows:

AM→FM1→FM2→AM

XM band select

Pressing the XM band select button will change the band as follows:

XM1→XM2→XM3→XM1

When the XM band select button is pressed while the power switch is in the ACC or ON position, the radio will come on at the channel last played.

The last station played will also come on when the ⏻ button is pressed to radio ON.

*When the XM button is pressed, the satellite radio mode will be skipped unless a SiriusXM® Satellite Radio service subscription is active. Satellite radio is not available in Alaska, Hawaii and Guam.

If a compact disc is playing when the XM button is pressed, the compact disc will automatically be turned off and the last radio station played will come on.

TUNE/SCROLL knob (Tuning)

Turn the TUNE/SCROLL knob to the left or right for manual tuning.

⏮ ⏭ SEEK tuning

Press the SEEK/CAT ⏮ or ⏭ button or to tune from low to high or high to low frequencies and to stop at the next broadcasting station.

SCAN tuning

Press the SCAN button to stop at each broadcasting station for 5 seconds. SCAN will appear on the screen while the radio is scan tuning.

Pressing the button again during this 5 second period will stop SCAN tuning and the radio will remain tuned to that station. If the SCAN button is not pressed within 5 seconds, SCAN tuning moves to the next station.

1 to 6 Station memory operations

Six stations can be set for the AM band. Twelve stations can be set for the FM band (6 for FM1, 6 for FM2). Eighteen channels can be set for the satellite radio (6 for XM1, 6 for XM2, 6 for XM3).

1. Choose the radio band AM, FM1 or FM2 using the FM·AM select button, or choose the satellite band XM1, XM2 or XM3 using the XM button.
2. Tune to the desired station using manual, SEEK or SCAN tuning. Press and hold any of the desired station memory buttons (1 – 6) until the preset number is updated on the display and the sound is briefly muted.
3. The channel indicator will then come on and the sound will resume. Programming is now complete.
4. Other buttons can be set in the same manner.

If the battery cable is disconnected, or if the fuse opens, the radio memory will be canceled. In that case, reset the desired stations.

Compact disc (CD) player operation

Place the power switch in the ACC or ON position and insert the Compact Disc (CD) into the slot with the label side facing up. The CD will be guided automatically into the slot and start playing.

After loading the CD, the number of tracks on the CD and the play time will appear on the display.

If the radio is already operating, it will automatically turn off and the CD will play.

If the system has been turned off while the CD was playing, pressing the ⏻ (power) button will start the CD.

Do not use 3.1 in (8 cm) discs.

⏮ ⏭ SEEK/CAT buttons

When the FF or REW button is pressed for more than 1.5 seconds while the CD is being played, the CD will play while fast forwarding or rewinding. When the button is released, the CD will return to normal play speed.

When the FF or REW button is pressed for less than 1.5 seconds while the CD is being played, the next track or the beginning of the current track on the CD will be played.

Repeat (RPT)

When the RPT play button is pressed while the CD is played, the play pattern can be changed as follows:

(CD)

Normal↔1 Track Repeat

(CD with compressed audio files)

Normal→1 Folder Repeat→1 Track Repeat→Normal

Random (RDM)

When the RDM play button is pressed while a CD is being played, the play pattern can be changed as follows:

(CD)

Normal↔1 Disc Random

(CD with compressed audio files)

Normal→1 Disc Random→1 Folder Random→Normal

⏏ CD eject

When the CD eject button is pressed with a compact disc loaded, the CD will be ejected.

When this button is pressed while the CD is being played, the CD will be ejected.

If the CD comes out and is not removed, it will be pulled back into the slot to protect it.

AUX IN jack

The AUX IN jack is located beneath the heater and air conditioner controls. The AUX IN audio jack accepts any standard analog audio input such as from a portable cassette tape/CD player, MP3 player or laptop computer.

MEDIA

With a CD loaded, press the MEDIA button until the CD mode is displayed on the screen. Pressing the MEDIA button repeatedly will maneuver through CD, USB, Bluetooth® Audio and AUX modes.

CD/MP3 display mode

While listening to an MP3/WMA CD, certain text may be displayed on the screen if the CD has been encoded with the text information. Depending on how the MP3/WMA CD is encoded, information such as artist, song and folder will be displayed.

The track number and total number of tracks in the current folder or on the current disc are displayed on the screen as well.

TUNE/SCROLL knob (MP3/WMA CD only)

If a MP3/WMA CD with multiple folders is playing, turn the TUNE/SCROLL knob to change folders. Turn the knob to the left to skip back a folder. Turn the knob to the right to skip ahead a folder.

Additional features

For additional information about the iPod® player available with this system, refer to "iPod® player operation" in this section.

For additional information about the USB (Universal Serial Bus) Connection Port available with this system, refer to "USB (Universal Serial Bus) Connection Port Operation" in this section.

For additional information about the Bluetooth® audio interface available with this system, refer to "Bluetooth® streaming audio" in this section.

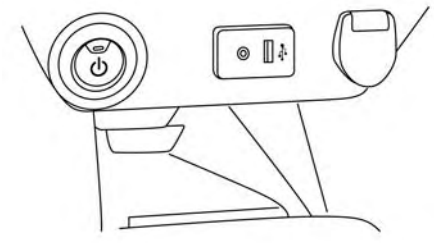

USB (UNIVERSAL SERIAL BUS) CONNECTION PORT

Connecting a device to the USB (Universal Serial Bus) connection port

WARNING

Do not connect, disconnect or operate the USB device while driving. Doing so can be a distraction. If distracted you could lose control of your vehicle and cause an accident or serious injury.

CAUTION

- **Do not force the USB device into the USB port. Inserting the USB device tilted or up-side-down into the port may damage the port. Make sure that the USB device is connected correctly into the USB port.**
- **Do not grab the USB port cover (if so equipped) when pulling the USB device out of the port. This could damage the port and the cover.**
- **Do not leave the USB cable in a place where it can be pulled unintentionally. Pulling the cable my damage the port.**

For additional information, refer to your device manufacturer's owner information regarding the proper use and care of the device.

The USB connection port is located beneath the heater and air conditioner controls. Insert the USB device into the port.

When a compatible storage device is plugged into the port, compatible audio files on the storage device can be played through the vehicle's audio system.

Audio file operation

MEDIA button

Place the power switch in the ON or ACC position and press the MEDIA button to switch to the USB input mode. If a CD is playing or another audio source is plugged in through the AUX input jack, the MEDIA button toggles among four sources.

⏮ ⏭ SEEK/CAT buttons

When the ⏮ or ⏭ button is pressed for more than 1.5 seconds while a USB memory is being played, the USB memory will play while fast forwarding or rewinding. When the button is released, the USB memory will return to normal play speed.

When the ⏮ or ⏭ button is pressed for less than 1.5 seconds while the USB memory is being played, the next track or the beginning of the current track on the USB memory will be played.

The multi-function controller can also be used to select tracks when the USB memory is being played.

REPEAT (RPT)

When the RPT button is pressed while the USB memory is being played, the play pattern can be changed as follows:

To change the play mode, press the RPT button repeatedly and the mode will change as follows:

Normal→1 Folder Repeat→1 Track Repeat→Normal

RANDOM (RDM)

When the RDM button is pressed while a USB memory device is being playing, the play pattern can be changed as follows:

To change the play mode, press the RDM button repeatedly and the mode will change as follows:

Normal→All Random→1 Folder Random→Normal

TUNE/SCROLL knob

If there are multiple folders with audio files on the USB device, turn the TUNE/SCROLL knob to change folders. Turn the knob to the left to skip back a folder. Turn the knob to the right to skip ahead a folder. If there is only one folder of audio files on the USB device, turning the TUNE/SCROLL knob in either direction will return to the first track on the USB device.

BACK button

When the BACK button is pressed, it returns to the previous display.

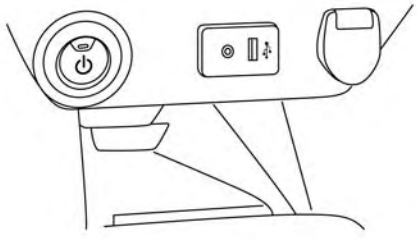

IPOD® PLAYER OPERATION

Connecting iPod®

WARNING

Do not connect, disconnect or operate the USB device while driving. Doing so can be a distraction. If distracted you could lose control of your vehicle and cause an accident or serious injury.

CAUTION

- **Do not force the USB device into the USB port. Inserting the USB device tilted or up-side-down into the port may damage the port. Make sure that the USB device is connected correctly into the USB port.**
- **Do not grab the USB port cover (if so equipped) when pulling the USB device out of the port. This could damage the port and the cover.**
- **Do not leave the USB cable in a place where it can be pulled unintentionally. Pulling the cable my damage the port.**

For additional information, refer to your device manufacturer's owner information regarding the proper use and care of the device.

To connect an iPod® to the vehicle so that the iPod® can be controlled with the audio system controls and display screen, use the USB connection port located beneath the heater and air conditioner controls. Connect the iPod®-specific end of the cable to the iPod® and the USB end of the cable to the USB connection port on the vehicle. If your iPod® supports charging via a USB connection, its battery will be charged while connected to the vehicle with the power switch in the ACC or ON position.

While connected to the vehicle, the iPod® can only be operated by the vehicle audio controls.

To disconnect the iPod® from the vehicle, remove the USB end of the cable from the USB connection port on the vehicle, then remove the cable from the iPod®.

*iPod® is a trademark of Apple Inc, registered in the U.S. and other countries.

Compatibility

The following models are available:

- Third generation iPhone® (Firmware version IOS 2.1–4.2.1)
- Fourth generation iPhone® (Firmware version IOS 4.0–6.1.3)
- Fifth generation iPhone® (firmware version IOS6/6.0)
- Fifth generation iPod® (Firmware version iOS 6.0.0–6.1.4)
- First generation iPod Classic® (Firmware version 1.1.1 or 2.0.1)
- Second generation iPod Classic® (Firmware version 2.0.1)
- First generation iPod touch® (Firmware version 1.1–2.2.1)
- Second generation iPod touch® (Firmware version IOS 2.1.1–2.2.1)
- Third generation iPod touch® (Firmware version IOS 3.1–3.1.3)
- Fourth generation iPod touch® (Firmware version IOS 4.1–6.1.3)
- Fifth generation iPod touch® (Firmware version IOS 6.0.0–6.1.3)
- First generation iPod nano® (Firmware version 1.3.1)
- Second generation iPod nano® (Firmware version 1.1.3)
- Third generation iPod nano® (Firmware version 1.0.0–1.1.3)
- Fourth generation iPod nano® (Firmware version 1.0.2–1.0.4)
- Fifth generation iPod nano® (Firmware version 1.0.1–1.0.2)
- Sixth generation iPod nano® (Firmware version 1.0–1.2)
- Seventh generation iPod nano® (Firmware version 1.0.0–1.0.1)

The iPod touch® may not respond quickly with the system in some cases.

Make sure that the iPod® firmware is updated.

Audio main operation

Place the power switch in the ACC or ON position. Then, press the MEDIA button repeatedly to switch to the iPod® mode.

If the system has been turned off while the iPod® was playing, pressing the ⏻ (power) button will start the iPod®.

iPod MENU button

Press the iPod MENU button while the iPod® operation menu on the audio display. Scroll through the menu list using the TUNE/SCROLL knob. Press the ENTER button to select a menu item. Items in the iPod® menu appear on the display in the following order:

- Now playing
- Playlists
- Artists
- Albums
- Songs
- Podcasts
- Genres
- Composers
- Audiobooks
- Shuffle songs

For additional information about each iten, refer to the iPod® Owner's Manual.

MEDIA button

Place the power switch in the ACC or ON position. Then, press the MEDIA button to switch to the iPod® mode.

If another audio source is playing and the iPod® is connected, pressing the MEDIA button changes to the iPod® mode.

If the system has been turned off while the iPod® was playing, pressing the ⏻ (power) button will start the iPod®.

When the MEDIA button is pressed while the iPod® is connected, the interface for iPod® operation is shown on the audio display. The items on the menu list can be scrolled by turning the TUNE/SCROLL dial while the iPod® is operational. To select an item, press ENTER/SETTING. Items in the iPod® menu appear on the display in the following order:

- Now Playing
- Playlists
- Artists
- Albums
- Songs
- Podcasts
- Genres
- Composers
- Audiobooks
- Shuffle Songs

For additional information, refer to the iPod® Owner's Manual.

⏮ ⏭ SEEK/CAT buttons

When the ⏮ or ⏭ button is pressed for more than 1.5 seconds while the iPod® is playing, the iPod® will play while fast forwarding or rewinding. When the button is released , the iPod® will return to the normal play speed.

When the ⏮ or ⏭ button is pressed for less than 1.5 seconds while the iPod® is playing, the next track or the beginning of the current track on the iPod® will be played.

REPEAT (RPT)

When the RPT play button is pressed while a track is being played, the play pattern can be changed as follows:

Repeat Off→1 Track Repeat→All Repeat→Repeat Off

RANDOM (RDM)

When the RDM play button is pressed while a track is being played, the play pattern can be changed as follows:

Shuffle Off→Track Shuffle→Album Shuffle→Shuffle Off

↩ BACK button

When the ↩ BACK button is pressed, it returns to the previous display.

BLUETOOTH® STREAMING AUDIO

If you have a compatible Bluetooth® audio device that is capable of playing audio files, the device can be connected to the vehicle's audio system so that the audio files on the device play through the vehicle's speakers. For additional information, refer to "FM/AM/SAT radio with compact disc (CD) player" in this section.

NOTE:
For additional information regarding Bluetooth® Streaming Audio, refer to the Cellular Phone Owner's Manual.

Connecting Bluetooth® audio

To connect your Bluetooth® audio device to the vehicle, follow the procedure below:

1. Press the ENTER/SETTING button.
2. Select "Bluetooth".
3. Select "Add Phone". This same screen can be accessed to remove, replace or select a different Bluetooth® device.
4. The system acknowledges the command and asks you to initiate connecting from the phone handset. The connecting procedure of the cellular phone varies according to each cellular phone model. For additional information, refer to the cellular phone's Owner's Manual. You can also visit www.nissanusa.com/bluetooth or www.nissan.ca/bluetooth for instructions on connecting NISSAN-recommended cellular phones.

Audio main operation:

To switch to the Bluetooth® audio mode, press the MEDIA button repeatedly until the Bluetooth® audio mode is displayed on the screen. Use the vehicle audio controls or the Bluetooth® device's controls to play, pause, skip or reverse tracks.

AUX DEVICE PLAYER OPERATION

The AUX input jack is located beneath the heater and air conditioner controls. The AUX input jack accepts any standard analog audio input such as from a portable cassette tape/CD player, MP3 player or laptop computer.

NISSAN strongly recommends using a stereo mini plug when connecting your music device to the audio system. Music may not play properly when monaural cable is used.

To switch the AUX mode, press the MEDIA button until the AUX mode is selected, while the power switch is in the "ON" or "ACC" position.

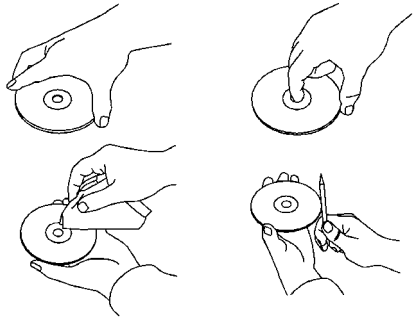

CD CARE AND CLEANING

- Handle a CD by its edges. Do not bend the disc. Never touch the surface of the disc.
- Always place the discs in the storage case when they are not being used.
- To clean a disc, wipe the surface from the center to the outer edge using a clean, soft cloth. Do not wipe the disc using a circular motion.
- Do not use a conventional record cleaner or alcohol intended for industrial use.
- A new disc may be rough on the inner and outer edges. Remove the rough edges by rubbing the inner and outer edges with the side of a pen or pencil as illustrated.

STEERING WHEEL SWITCH FOR AUDIO CONTROL

The audio system can be operated using the controls on the steering wheel.

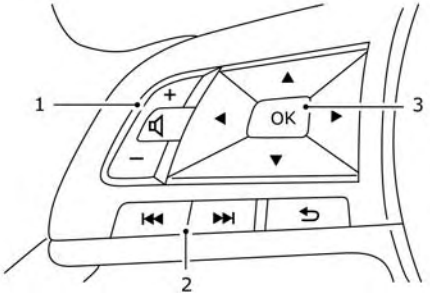

1. Volume control switch
2. ⏮ ⏭ Seek/Track switches
3. OK button

Volume control switch

Push the volume control switch to increase or decrease the volume.

OK button

Push the OK button to cycle through audio options both in the vehicle information display and on the display screen.

⏮ ⏭ Seek/Track switches

AM and FM:

- Push or hold for less than 1.5 seconds to increase or decrease the preset station.
- Push or hold for more than 1.5 seconds to seek up or down to the next station.

XM:

- Push or hold for less than 1.5 seconds to increase or decrease the preset station.
- Push or hold for more than 1.5 seconds to go to the next or previous category.

iPod®:

- Push or hold for less than 1.5 seconds to increase or decrease the track number.
- Push or hold for more than 1.5 seconds to increase or decrease the folder number.

CD:

- Push or hold for less than 1.5 seconds to increase or decrease the track number.
- Push or hold for more than 1.5 seconds to increase or decrease the folder number (if playing compressed audio files).

USB:

- Push or hold for less than 1.5 seconds to increase or decrease the track number.
- Push or hold for more than 1.5 seconds to increase or decrease the folder number.

ANTENNA

The vehicle is equipped with a shark fin antenna and an antenna pattern is printed inside the rear window.

CAUTION

- **Do not place metalized film near the rear window glass or attach any metal parts to it. This may cause poor reception or noise.**
- **When cleaning the inside of the rear window, be careful not to scratch or damage the rear window antenna. Lightly wipe along the antenna with a dampened soft cloth.**

CAR PHONE OR CB RADIO

When installing a CB, ham radio or car phone in your vehicle, be sure to observe the following precautions; otherwise, the new equipment may adversely affect the EV control system and other electronic parts.

WARNING

- **A cellular phone should not be used for any purpose while driving so full attention may be given to vehicle operation. Some jurisdictions prohibit the use of cellular phones while driving.**
- **If you must make a call while your vehicle is in motion, the hands free cellular phone operational mode is highly recommended. Exercise extreme caution at all times so full attention may be given to vehicle operation.**
- **If you are unable to devote full attention to vehicle operation while talking on the phone, pull off the road to a safe location and stop your vehicle.**

CAUTION

- **Keep the antenna as far away as possible from the electronic control modules.**
- **Keep the antenna wire more than 20 cm (8 in) away from the electronic control system harnesses. Do not route the antenna wire next to any harness.**
- **Adjust the antenna standing-wave ratio as recommended by the manufacturer.**
- **Connect the ground wire from the CB radio chassis to the body.**
- **For additional information, it is recommended that you visit a NISSAN certified LEAF dealer.**

BLUETOOTH® HANDS-FREE PHONE SYSTEM WITHOUT NAVIGATION SYSTEM (IF SO EQUIPPED)

WARNING

- **Use a phone after stopping your vehicle in a safe location. If you have to use a phone while driving, exercise extreme caution at all times so full attention may be given to vehicle operation.**
- **If you are unable to devote full attention to vehicle operation while talking on the phone, pull off the road to a safe location and stop your vehicle.**

CAUTION

To avoid draining the vehicle battery, use a phone after the READY to drive indicator light is on.

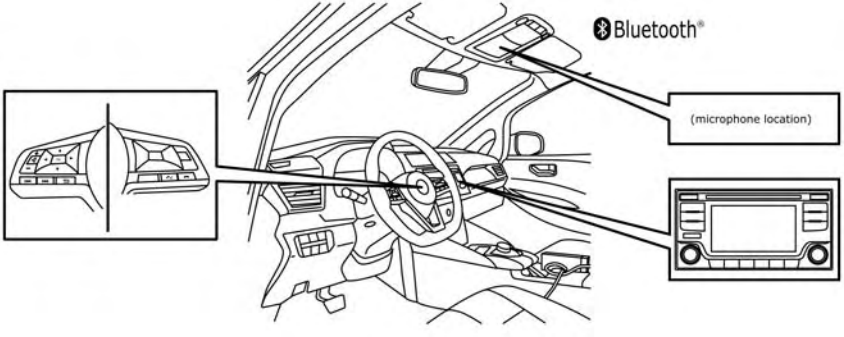

Your NISSAN is equipped with the Bluetooth® Hands-Free Phone System. If you have a compatible Bluetooth® enabled cellular phone, you can set up the wireless connection between your cellular phone and the in-vehicle phone module. With Bluetooth® wireless technology, you can make or receive a hands-free telephone call with your cellular phone in the vehicle.

Once your cellular phone is connected to the in-vehicle phone module, no other phone connecting procedure is required. Your phone is automatically connected with the in-vehicle phone module when the power switch is placed in the ON position with the previously connected cellular phone turned on and carried in the vehicle.

NOTE:
Some devices require the user to accept specific connections for certain features (such as phonebook download). If your phone does not connect automatically to the system, consult the phone's Owner's Manual for details on device operation.

You can connect up to five different Bluetooth® cellular phones to the in-vehicle phone module. However, you can talk on only one cellular phone at a time.

Before using the Bluetooth® Hands-Free Phone System, refer to the following notes:

- Set up the wireless connection between a compatible cellular phone and the in-vehicle phone module before using the hands-free phone system.
- Some Bluetooth® enabled cellular phones may not be recognized or work properly. Please visit www.nissanusa.com/bluetooth or www.nissan.ca/bluetooth for a recommended phone list and connecting instructions.
- You will not be able to use a hands-free phone under the following conditions:
  - Your vehicle is outside of the cellular service area.
  - Your vehicle is in an area where it is difficult to receive a cellular signal; such as in a tunnel, in an underground parking garage, near a tall building or in a mountainous area.
  - Your cellular phone is locked to prevent it from being dialed.

- When the radio wave condition is not ideal or ambient sound is too loud, it may be difficult to hear the other person's voice during a call.
- Do not place the cellular phone in an area surrounded by metal or far away from the in-vehicle phone module to prevent tone quality degradation and wireless connection disruption.
- While a cellular phone is connected through the Bluetooth® wireless connection, the battery power of the cellular phone may discharge quicker than usual. The Bluetooth® Hands-Free Phone System cannot charge cellular phones.
- For additional information, refer to "Troubleshooting guide" in this section. You can also visit www.nissanusa.com/bluetooth or www.nissan.ca/bluetooth for troubleshooting help if the hands-free phone system seems to be malfunctioning.
- Some cellular phones or other devices may cause interference or a buzzing noise to come from the audio system speakers. Storing the device in a different location may reduce or eliminate the noise.
- For additional information, refer to the cellular phone Owner's Manual regarding the telephone charges, cellular phone antenna and body, etc.

REGULATORY INFORMATION

FCC Regulatory information

CAUTION: To maintain compliance with FCC's RF exposure guidelines, use only the supplied antenna. Unauthorized antenna, modification, or attachments could damage the transmitter and may violate FCC regulations.

Operation is subject to the following two conditions:

1. This device may not cause interference and
2. this device must accept any interference, including interference that may cause undesired operation of the device.

IC Regulatory information

- Operation is subject to the following two conditions: (1) this device may not cause interference, and (2) this device must accept any interference, including interference that may cause undesired operation of the device.
- This Class B digital apparatus meets all requirements of the Canadian Interference-Causing Equipment Regulations.

Bluetooth® BLUETOOTH® is a trademark owned by Bluetooth SIG, Inc. and licensed to Visteon.

USING THE SYSTEM

The NISSAN Voice Recognition system allows hands-free operation of the Bluetooth® Hands-Free Phone System.

If the vehicle is in motion, some commands may not be available so full attention may be given to vehicle operation.

Initialization

When the power switch is placed in the ON position, NISSAN Voice Recognition is initialized, which takes a few seconds. If the button is pressed before the initialization completes, the system will announce "Hands-free phone system not ready" and will not react to voice commands.

Operating tips

To get the best performance out of the NISSAN Voice Recognition system, observe the following:

- Keep the interior of the vehicle as quiet as possible. Point all vents away from the microphone area and close the windows to eliminate surrounding noises (traffic noises, vibration sounds, etc.), which may prevent the system from recognizing voice commands correctly.
- Wait until the tone sounds before speaking a command. Otherwise, the command will not be received properly.
- Start speaking a command within 5 seconds after the tone sounds.
- Speak in a natural voice without pausing between words.

Giving voice commands

To operate NISSAN Voice Recognition, press and release the button located on the steering wheel. After the tone sounds, speak a command.

The command given is picked up by the microphone, and voice feedback is given when the command is accepted.

- If you need to hear the available commands for the current menu again, say "Help" and the system will repeat them.
- If a command is not recognized, the system announces, "Command not recognized. Please try again." Make sure the command is said exactly as prompted by the system and repeat the command in a clear voice.
- If you want to go back to the previous command, you can say "Go back" or "Correction" any time the system is waiting for a response.
- You can cancel a command when the system is waiting for a response by saying, "Cancel" or "Quit." The system announces "Cancel" and ends the Voice Recognition session. You can also press and hold the button on the steering wheel for 5 seconds at any time to end the Voice Recognition session. Whenever the Voice Recognition session is canceled, a double beep is played to indicate you have exited the system.
- If you want to adjust the volume of the voice feedback, press the volume control switches (+ or -) on the steering wheel while being provided with feedback. You can also use the radio volume control knob.

Voice Prompt Interrupt

In most cases you can interrupt the voice feedback to speak the next command by pressing the button on the steering wheel. After interrupting the system, wait for a beep before speaking your command.

One Shot Call

To use the system faster, you may speak the second level commands with the main menu command on the main menu. For example, press the button and after the tone say "Call Redial".

CONTROL BUTTONS

The control buttons for the Bluetooth® Hands-Free Phone System are located on the steering wheel.

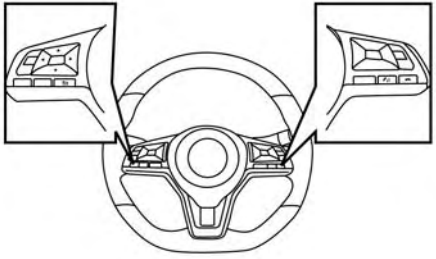

Phone/send

Press the button to initiate a Voice Recognition session or answer an incoming call.

You can also use the button to interrupt the system feedback and give a command at once. For additional information, refer to "Voice commands" and "During a call" in this section.

Phone/end

While the Voice Recognition system is active, press and hold the button for 5 seconds to quit the Voice Recognition system at any time.

Tuning switch (left side)

While using the Voice Recognition system, push the ▲ or ▼ switch on the steering wheel to manually control the phone system.

CONNECTING PROCEDURE

NOTE:
The connecting procedure must be performed when the vehicle is stationary. If the vehicle starts moving during the procedure, the procedure will be canceled.

1. Press the ENTER/SETTING button.
2. Use the TUNE/SCROLL knob to select "Bluetooth" and then press the ENTER/SETTING button.

Menu Item		Result
Bluetooth ON/OFF		Allows user to switch Bluetooth® on and off. Bluetooth® must be turned on in order to connect device.
	On	Turns Bluetooth® functionality on.
	Off	Turns Bluetooth® functionality off.
Add Phone or Device		Upon pressing this button, a message with a PIN appears on the screen. Operate the Bluetooth® phone to enter the PIN and complete the connection process.
Replace Phone		Replace the phone currently connected to the system. This option allows the user to keep any voicetags that were recorded using the previous phone if vehicle is equipped with voice recognition.

The connecting procedure varies according to each phone. For additional information, refer to the phone's Owner's Manual. You can also visit www.nissanusa.com/bluetooth or www.nissan.ca/bluetooth or call the NISSAN Consumer Affairs Department for instructions on connecting recommended cellular phones.

VOICE COMMANDS

Voice commands can be used to operate the Bluetooth® Hands-Free Phone System. Press the button to bring up the phone command menu. The available options are:

- Call
- Phonebook
- Recent Calls
- Messaging (if so equipped)
- Show Applications (if so equipped)
- Select Phone or Device

"Call"

For additional information, refer to "Making a call" in this section.

"Phonebook"

The following commands are available under "Phonebook":

- (a name)

  Say a name in the phonebook to bring up a list of options for a list of options for that phonebook entry. The system will say the name it interpreted based on the voice command provided. If the name is incorrect, say "Correction" to hear another name.

Once the correct phonebook entry is identified, say "Dial" to dial the number or "Send Text" to send a text message to that number. Say "Record Name" to record a name for the phonebook entry. Say "Delete Recording" to delete a recorded name for the phonebook entry.

- List Names

  Speak this command to have the system list the names in the phonebook one by one alphabetically. Say "Dial" to dial the number of the current name or "Send Text" to send a text message to that number. Say "Next Entry", "Previous Entry" or Help to move through the list alphabetically. Say "Record Name" to record a name for the current phonebook

entry. Say "Delete Recording" to delete a recorded name for the current phonebook entry.

"Recent Calls"

The following commands are available under "Recent Calls":

- Incoming

  Speak this command to list the last five incoming calls to the vehicle. If the call is from an entry in the phonebook, the name will be displayed. Otherwise, the phone number of the incoming call will be displayed.

Say "Dial" to call the number or "Send Text" to send a text message to that number. Say "Next Entry", "Previous Entry" or Help to move through the list of incoming calls.

- Missed

  Speak this command to list the last five missed calls to the vehicle. If the call is from an entry in the phonebook, the name will be displayed. Otherwise, the phone number of the missed call will be displayed.

Say "Dial" to call the number or "Send Text" to send a text message to that number. Say "Next Entry", "Previous Entry" or Help to move through the list of missed calls.

- Outgoing

  Speak this command to list the last five outgoing calls from the vehicle. If the call was to an entry in the phonebook, the name will be displayed. Otherwise, the phone number of the outgoing call will be displayed.

Say "Dial" to call the number or "Send Text" to send a text message to that number. Say "Next Entry", "Previous Entry" or Help to move through the list of outgoing calls.

- Redial

  Speak this command to call the last number dialed.

- Call back

  Speak this command to call the number of the last incoming call to the vehicle.

"Messaging" (if so equipped)

Speak this command to access text messaging functions. For additional information, refer to "Text messaging" in this section.

"Show Applications" (if so equipped)

Speak this command to display list of smartphone apps available.

"Select Phone or Device"

Speak this command to select a phone to use from a list of those phones connected to the vehicle.

MAKING A CALL

To make a call from a phone connected to the vehicle's Bluetooth® Hands-Free Phone System:

1. Press the button.
2. The system will prompt you for a command. Say "Call".
3. Select one of the available voice commands to continue:
   - "(a name)" — Speak the name of a phonebook entry to place a call to that entry. The system will respond with the name it interpreted from your command and will prompt you to confirm that the name is correct. Say "Yes" to initiate the call or "No" to hear another name from the phonebook.

- "Number" — Speak this command to place a call by inputting numbers.
- For 7- and 10-digit phone numbers, speak the numbers. When finished, say "Dial" to initiate the call. Say "Correction" at any time in the process to correct a misspoken or misinterpreted number.
- For phone numbers with more digits or special characters, say "Special Number", then speak the digits. Up to 24 digits can be entered. Available special characters are "star", "pound", "plus" and "pause". When finished, say "Dial" to initiate the call. Say "Correction" at any time in the process to correct a misspoken or misinterpreted number or character.
- "Redial" — Speak this command to dial the number of the last outgoing call. The system will display "Redialing <name/number>". The name of the phonebook entry will be displayed if it available, otherwise the number being redialed will be displayed.
- "Call Back" — Speak this command to dial the number of the last incoming call. The system will display "Calling back <name/number>". The name of the phonebook entry will be displayed if it available, otherwise the number being called back will be displayed.

RECEIVING A CALL

When a call is received by the phone connected to the vehicle's Bluetooth® Hands-Free Phone System, the call information is displayed on the control panel display.

Press the button to accept the call. Press the button to reject the call.

DURING A CALL

When a call is active, press the button to access additional options. Speak one of the following commands.

- "Send" — Speak this command followed by the digits to enter digits during the phone call.
- "Mute On" or "Mute Off" — Speak the command to mute or unmute the system.
- "Transfer Call" — Speak this command to transfer the call to the handset. To transfer the call back from the handset to the Bluetooth® Hands-Free Phone System, press the button and confirm when prompted.

If supported by the phone, the Bluetooth® Hands-Free Phone System allows for call waiting functionality. If a call is received while another call is already active, a message will be displayed on the screen. Press the button to hold the active call and switch to the second call. Press the button to reject the second call.

While the second call is active, pressing the button will allow the same commands that are available during any calls as well as two additional commands:

- "Switch Call" — Speak this command to hold the second call and switch back to the original call.
- "End Other Call" — Speak this command to stay with the second call and end the original call.

Press the button to accept the call. Press the button to reject the call.

ENDING A CALL

To end an active call, press the button.

TEXT MESSAGING (IF SO EQUIPPED)

WARNING

- **Laws in some jurisdictions may restrict the use of "Text-to-Speech". Check local regulations before using this feature.**
- **Laws in some jurisdictions may restrict the use of some of the applications and features, such as social networking and texting. Check local regulations for any requirements.**
- **Use the text messaging feature after stopping your vehicle in a safe location. If you have to use the feature while driving, exercise extreme caution at all times so full attention may be given to vehicle operation.**
- **If you are unable to devote full attention to vehicle operation while using the text messaging feature, pull off the road to a safe location and stop your vehicle.**

NOTE:
Many phones may require special permission to enable text messaging. Check the phone's screen during Bluetooth® pairing. For some phones, you may need to enable 'Notifications' in the phone's Bluetooth® menu for text messages to appear on the headunit. Please consult your phone's Owner's manual. Text message integration requires that the phone support MAP (Message Access Profile) for both receiving and sending text messages. Some phones may not support all text messaging features. For additional information about compatibility, please visit www.nissanusa.com/bluetooth or www.nissan.ca/bluetooth, as well as your device's Owner's manual.

The system allows for the sending and receiving of text messages through the vehicle interface.

Sending a text message:

1. Press the button on the steering wheel.
2. Say "Phone" after the tone.
3. Say "Send Text" after the tone.
4. The system will provide a list of available commands in order to determine the recipient of the text message. Choose from the following:
   - (a name)
   - Missed Calls
   - Incoming Calls
   - Outgoing Calls

   For additional information, refer to "Voice commands" in this section.
5. Once a recipient is chosen, the system prompts for which message to send. Five predefined messages are available as well as three custom messages. To choose one of the predefined messages, speak one of the following after the tone:
   - "Driving, can't text"
   - "Call me"
   - "On my way"

- "Running late"
- "Custom message"

  To send one of the custom messages, say "Custom Messages". If more than one custom message is stored, the system will prompt for the number of the desired custom message. For additional information on setting and managing custom text messages, refer to "Bluetooth® settings" in this section.

Reading a received text message:

1. Press the button on the steering wheel.
2. Say "Messaging" after the tone.
3. Say "Read Text" after the tone.

The text message, sender and delivery time are shown on the screen. Use the tuning switch to scroll through all text messages if more than one are available. Press the button to exit the text message screen. Press the button to access the following options for replying to the text message:

- Call Back

  Speak this command to call the sender of the text message using the Bluetooth® Hands-Free Phone System.
- Send Text

  Speak this command to send a text message response to the sender of the text message.
- Read Text

  Speak this command to read the text message again.
- Previous Text

  Speak this command to move to the previous text message.
- Next Text

  Speak this command to move to the next text message.

NOTE:
Text messages are only displayed if the vehicle speed is less than 5 mph (8 km/h).

BLUETOOTH® SETTINGS

To access and adjust the settings for the Bluetooth® Hands-Free Phone System:

1. Press the ENTER/SETTING button.
2. Use the TUNE/SCROLL knob to select "Bluetooth" and then press the ENTER/SETTING button:

- Bluetooth

  Select "On" or "Off" to turn the vehicle's Bluetooth® system on or off.
- Add Phone or Device

  For additional information, refer to "Connecting procedure" in this section.

- Delete Phone or Device

  Select to delete a phone from the displayed list. The system will ask to confirm before deleting the phone.

- Replace Phone

  Select to replace a phone from the displayed list. When a selection is made, the system will ask to confirm before proceeding. The recorded phonebook for the phone being deleted will be saved as long as the new phone's phonebook is the same as the old phone's phonebook.

- Select Phone or Device

  Select to connect to a previously connected phone from the displayed list.

- Phonebook Download

  Select to turn on or off the automatic download of a connected phone's phonebook.

- Show Incoming Calls

  Select "Driver Only" to have incoming call information displayed only in the vehicle information display. Select "Both" to have incoming call information displayed in both the vehicle information display and the center display screen.

- Text Message (if so equipped)

  Select to adjust the volume of the sound that plays when a new text is received by a phone connected to the Bluetooth® Hands-Free Phone System. The setting all the way to the left indicates that the new text sound will be muted.

- Show Incoming Text (if so equipped)

  Select "Driver Only" to have incoming text messages displayed only in the vehicle information display. Select "Both" to have incoming text messages displayed in both the vehicle information display and the center display screen. Select "None" to have no display of incoming text messages.

- Edit Custom Messages (if so equipped)

  Select to set a custom message that will be available with the standard options when sending a text message. To set a custom message, send a text message to your own phone number while the phone is connected to the system. Three custom messages can be set. Custom messages can only be set while the vehicle is stationary.

- Auto Reply (if so equipped)

  Select to turn on or off the Auto Reply function. When enabled, the vehicle will automatically send a predefined text message to the sender when a text message is received while driving.

- Auto Reply Message

  Select to choose the message that is sent when the Auto Reply function is enabled. Choose from "I'm Driving" or one of the three custom messages stored in the system.

- Vehicle Signature On/Off

  Select to choose whether or not the vehicle signature is added to outgoing text messages from the vehicle. This message cannot be changed or customized.

MANUAL CONTROLS

While using the Voice Recognition system, it is possible to select menu options by using the steering wheel controls instead of speaking voice commands. This can be especially helpful if the noise of driving makes it difficult for Voice Recognition system to accurately interpret commands. The manual control mode does not allow

dialing a phone number by digits. The user may select an entry from the Phonebook or Recent Calls lists. To re-activate Voice Recognition, exit the manual control mode by pressing and holding the PHONE/END button. At the time, pressing the PHONE/SEND button will start the Hands Free Phone System.

TROUBLESHOOTING GUIDE

The system should respond correctly to all voice commands without difficulty. If problems are encountered, try the following solutions.

Where the solutions are listed by number, try each solution in turn, starting with number 1, until the problem is resolved.

Symptom	Solution
System fails to interrupt the command correctly.	1. Ensure that the command is valid. For additional information, refer to "Voice commands" in this section.
	2. Ensure that the command is spoken after the tone.
	3. Speak clearly without pausing between words and at a level appropriate to the ambient noise level in the vehicle.
	4. Ensure that the ambient noise level is not excessive (for example, windows open or defroster on). NOTE: if it is too noisy to use the phone, it is likely that the voice commands will not be recognized.
	5. If more than one command was said at a time, try saying the commands separately.
	6. If the system consistently fails to recognize commands, the voice training procedure should be carried out to improve the recognition response for the speaker.
The system consistently selects the wrong entry from the phone book.	1. Ensure that the phone book entry name requested matches what was originally stored. This can be confirmed by using the "List Names" command. For additional information, refer to "Phonebook" in this section.
	2. Replace one of the names being confused with a new name.
	3. Say First Name and Last Name of the desired contact to improve recognition.

5 Starting and driving

Precautions when starting and driving 5-4
Tire Pressure Monitoring System (TPMS). 5-4
Avoiding collision and rollover. 5-7
Off-road recovery 5-8
Rapid air pressure loss 5-8
Drinking alcohol/drugs and driving 5-9
Push-button power switch 5-10
NISSAN Intelligent Key® system 5-10
Operating range for EV start function 5-10
Power switch operation 5-11
Power switch positions 5-12
Emergency EV shut off. 5-12
NISSAN Intelligent Key® battery discharge . . .5-13
NISSAN Vehicle Immobilizer System 5-13
Before starting the EV system. 5-14
Starting the EV system 5-14
Driving the vehicle. 5-15
Electric shift control system 5-15
Parking brake. 5-19
Pedal type 5-19
Switch type (models with electronic parking brake system) 5-20
e-Pedal system 5-22
e-Pedal system operation 5-22
e-Pedal system limitations. 5-24
System malfunction 5-25
Lane Departure Warning (LDW) (if so equipped) 5-26
LDW system operation 5-26
How to enable/disable the LDW system 5-27
LDW system limitations 5-27
System temporarily unavailable 5-29
System malfunction 5-30
System maintenance 5-30
Intelligent Lane Intervention (I-LI) (if so equipped) 5-31
I-LI system operation 5-32
How to enable/disable the I-LI system 5-33
I-LI system limitations 5-34
System temporarily unavailable 5-35
System malfunction 5-36
System maintenance 5-36
Blind Spot Warning (BSW) (if so equipped) 5-37
BSW system operation 5-38
How to enable/disable the BSW system 5-39
BSW system limitations 5-40
BSW driving situations 5-41

System temporarily unavailable 5-44
System maintenance 5-45
Rear Cross Traffic Alert (RCTA) (if so equipped) . .5-46
RCTA system operation 5-47
How to enable/disable the RCTA system . . .5-49
RCTA system limitations 5-50
System temporarily unavailable 5-52
System maintenance 5-52
Cruise control (if so equipped) 5-54
Precautions on cruise control 5-54
Cruise control operations 5-54
Intelligent Cruise Control (ICC) (for vehicles without ProPILOT™ Assist) (if so equipped) 5-56
How to select the cruise control mode. 5-58
Vehicle-to-vehicle distance control mode. . .5-58
Vehicle-to-vehicle distance control mode operation 5-59
Vehicle-to-vehicle distance control mode switches 5-61
Vehicle-to-vehicle distance control mode limitations. 5-67
System temporarily unavailable. 5-71
System maintenance 5-73
Conventional (fixed speed) cruise control mode 5-74
ProPILOT™ Assist (if so equipped) 5-79
ProPILOT™ Assist system operation 5-81
Turning the conventional (fixed speed) cruise control mode on 5-84
Operating ProPILOT™ Assist 5-85
How to enable/disable the Steering Assist . .5-89
Intelligent Cruise Control (ICC) (for vehicles with ProPILOT™ Assist). 5-90
Steering Assist. 5-99
Conventional (fixed speed) cruise control mode 5-106
Automatic Emergency Braking (AEB) (if so equipped) 5-110
AEB system operation. 5-111
Turning the AEB system on/off. 5-112
AEB system limitations 5-113
System temporarily unavailable 5-114
System malfunction. 5-115
System maintenance 5-115

Automatic Emergency Braking (AEB) with Pedestrian Detection (if so equipped) 5-117
AEB with Pedestrian Detection system operation 5-118
Turning the AEB with Pedestrian Detection system on/off 5-120
AEB with Pedestrian Detection system limitations 5-120
System temporarily unavailable 5-123
System malfunction 5-124
System maintenance 5-124
Intelligent Driver Alertness (I-DA) (if so equipped) 5-126
I-DA system operation 5-127
How to enable/disable the I-DA system . . .5-128
I-DA system limitations 5-128
Increasing power economy 5-130
ECO drive report 5-131
Parking/parking on hills 5-132
Power steering system 5-133
Brake system 5-134
Brake precautions 5-134
Anti-lock Braking System (ABS) 5-136
Vehicle Dynamic Control (VDC) system 5-137
Chassis control 5-139
Intelligent Trace Control (I-TC) 5-139
Hill start assist system 5-140
Cold weather driving 5-141
Freeing a frozen door lock 5-141
Antifreeze 5-141
12-volt battery 5-141
Draining of coolant water 5-142
Tire equipment 5-142
Special winter equipment 5-142
Driving on snow or ice 5-142
Freeing a frozen charge port lid 5-143
Parking brake 5-143

PRECAUTIONS WHEN STARTING AND DRIVING

WARNING

- **Do not leave children or adults who would normally require the support of others alone in your vehicle. Pets should not be left alone either. They could accidentally injure themselves or others through inadvertent operation of the vehicle. Also, on hot, sunny days, temperatures in a closed vehicle could quickly become high enough to cause severe or possibly fatal injuries to people or animals.**
- **Properly secure all cargo with ropes or straps to help prevent it from sliding or shifting. Do not place cargo higher than the seatbacks. In a sudden stop or collision, unsecured cargo could cause personal injury.**

TIRE PRESSURE MONITORING SYSTEM (TPMS)

Each tire, including the spare (if provided), should be checked monthly when cold and inflated to the inflation pressure recommended by the vehicle manufacturer on the vehicle placard or tire inflation pressure label. (If your vehicle has tires of a different size than the size indicated on the vehicle placard or tire inflation pressure label, you should determine the proper tire inflation pressure for those tires.)

As an added safety feature, your vehicle has been equipped with a Tire Pressure Monitoring System (TPMS) that illuminates a low tire pressure telltale when one or more of your tires is significantly underinflated. Accordingly, when the low tire pressure telltale illuminates, you should stop and check your tires as soon as possible, and inflate them to the proper pressure. Driving on a significantly underinflated tire causes the tire to overheat and can lead to tire failure. Under-inflation also reduces power efficiency and tire tread life, and may affect the vehicle's handling and stopping ability.

Please note that the TPMS is not a substitute for proper tire maintenance, and it is the driver's responsibility to maintain correct tire pressure, even if under-inflation has not reached the level to trigger illumination of the TPMS low tire pressure telltale.

Your vehicle has also been equipped with a TPMS malfunction indicator to indicate when the system is not operating properly. The TPMS malfunction indicator is combined with the low tire pressure telltale. When the system detects a malfunction, the telltale will flash for approximately one minute and then remain continuously illuminated. This sequence will continue upon subsequent vehicle start-ups as long as the malfunction exists. When the malfunction indicator is illuminated, the system may not be able to detect or signal low tire pressure as intended. TPMS malfunctions may occur for a variety of reasons, including the installation of replacement or alternate tires or wheels on the vehicle that prevent the TPMS from functioning properly. Always check the TPMS malfunction telltale after replacing one or more tires or wheels on your vehicle to ensure that the replacement or alternate tires and wheels allow the TPMS to continue to function properly.

Additional information

- When replacing a wheel without the TPMS such as the spare tire, the TPMS does not monitor the tire pressure of the spare tire.

- The TPMS will activate only when the vehicle is driven at speeds above 16 mph (25 km/h). Also, this system may not detect a sudden drop in tire pressure (for example, a flat tire while driving).
- The low tire pressure warning light does not automatically turn off when the tire pressure is adjusted. After the tire is inflated to the recommended pressure, the vehicle must be driven at speeds above 16 mph (25 km/h) to activate the TPMS and turn off the low tire pressure warning light. Use a tire pressure gauge to check the tire pressure.
- The "Tire Pressure Low - Add Air" warning also appears on the vehicle information display when the low tire pressure warning light is illuminated and low tire pressure is detected. The "Tire Pressure Low - Add Air" warning turns off when the low tire pressure warning light turns off.
- The "Tire Pressure Low - Add Air" warning appears each time the power switch is placed in the ON position as long as the low tire pressure warning light remains illuminated.
- The "Tire Pressure Low - Add Air" warning does not appear if the low tire pressure warning light illuminates to indicate a TPMS malfunction.
- Tire pressure rises and falls depending on the heat caused by operation of the vehicle and the outside temperature. Do not reduce the tire pressure after driving because the tire pressure rises after driving. Low outside temperature can lower the temperature of the air inside the tire, which can cause a lower tire inflation pressure. This may cause the low tire pressure warning light to illuminate. If the warning light illuminates in low ambient temperature, check the tire pressure for all four tires.
- The pressure of all tires can also be checked on the display screen. The order of the tire pressure figures displayed on the screen does not correspond with the actual order of the tire position.

For additional information, refer to "Low tire pressure warning light" in the "Instruments and controls" section and "Tire Pressure Monitoring System (TPMS)" in the "In case of emergency" section of this manual.

WARNING

- **Radio waves could adversely affect electric medical equipment. Those who use a pacemaker should contact the electric medical equipment manufacturer for the possible influences before use.**
- **If the low tire pressure warning light illuminates while driving, avoid sudden steering maneuvers or abrupt braking, reduce vehicle speed, pull off the road to a safe location and stop the vehicle as soon as possible. Driving with under-inflated tires may permanently damage the tires and increase the likelihood of tire failure. Serious vehicle damage could occur and may lead to an accident and could result in serious personal injury. Check the tire pressure for all four tires. Adjust the tire pressure to the recommended COLD tire pressure shown on the Tire and Loading Information label to turn the low tire pressure warning light off. If the tire is flat, repair it as soon as possible. (For additional information, refer to "Flat tire" in the "In case of emergency" section of this manual.)**

- **When replacing a wheel without the TPMS such as the spare tire, TPMS will not function and the low tire pressure warning light will flash for approximately 1 minute. The light will remain on after 1 minute. Have your tires replaced and/or TPMS system reset as soon as possible. It is recommended that you visit a NISSAN certified LEAF dealer for this service.**
- **Replacing tires with those not originally specified by NISSAN could affect the proper operation of the TPMS.**
- **Do not inject any tire liquid or aerosol tire sealant into the tires, as this may cause a malfunction of the tire pressure sensors.**

CAUTION

- **The TPMS may not function properly when the wheels are equipped with tire chains or the wheels are buried in snow.**
- **Do not place metalized film or any metal parts (antenna, etc.) on the windows. This may cause poor reception of the signals from the tire pressure sensors, and the TPMS will not function properly.**

Some devices and transmitters may temporarily interfere with the operation of the TPMS and cause the low tire pressure warning light to illuminate. Some examples are:

- Facilities or electric devices using similar radio frequencies that are near the vehicle.
- If a transmitter set to similar frequencies is being used in or near the vehicle.
- If a computer (or similar equipment) or a DC/AC converter is being used in or near the vehicle.

The low tire pressure warning light may illuminate in the following cases:

- If the vehicle is equipped with a wheel and tire without TPMS.
- If the TPMS has been replaced and the ID has not been registered.
- If the wheel is not originally specified by NISSAN.

FCC Notice:

For USA:

This device complies with Part 15 of the FCC Rules. Operation is subject to the following two conditions: (1) This device may not cause harmful interference, and (2) this device must accept any interference received, including interference that may cause undesired operation.

NOTE:
Changes or modifications not expressly approved by the party responsible for compliance could void the user's authority to operate the equipment.

For Canada:

This device complies with Industry Canada licence-exempt RSS standard(s). Operation is subject to the following two conditions: (1) this device may not cause

interference, and (2) this device must accept any interference, including interference that may cause undesired operation of the device.

TPMS with Easy-Fill Tire Alert

When tire pressure is low, the low tire pressure warning light illuminates.

This vehicle provides visual and audible signals to help you inflate the tires to the recommended COLD tire pressure.

Vehicle set-up:

1. Park the vehicle in a safe and level place.
2. Apply the parking brake and push the P (Park) position switch on the shift lever.
3. Place the power switch in the ON position. Do not place in the READY to drive mode.

Operation:

1. Add air to the tire.
2. After a few seconds, the hazard indicators will start flashing.
3. When the designated pressure is reached, the horn beeps once and the hazard indicators stop flashing.
4. Perform the above steps for each tire.

- If the tire is over-inflated more than approximately 4 psi (30 kPa), the horn beeps and the hazard indicators flash three times. To correct the pressure, push the core of the valve stem on the tire briefly to release pressure. When the pressure reaches the designated pressure, the horn beeps once.
- If the hazard indicator does not flash within approximately 15 seconds after starting to inflate the tire, it indicates that the Easy-Fill Tire Alert is not operating.
- The TPMS will not activate the Easy-Fill Tire Alert under the following conditions:
  - If there is interference from an external device or transmitter.
  - The air pressure from the inflation device is not sufficient to inflate the tire, such as those using a power socket.
  - If electrical equipment is being used in or near the vehicle.
  - There is a malfunction in the TPMS system.
  - There is a malfunction in the horn or hazard indicators.
  - If the Easy-Fill Tire Alert does not operate due to TPMS interference, move the vehicle about 3 ft (1 m) backward or forward and try again.

If the Easy-Fill Tire Alert is not working, use a tire pressure gauge.

AVOIDING COLLISION AND ROLLOVER

WARNING

Failure to operate this vehicle in a safe and prudent manner may result in loss of control or an accident.

Be alert and drive defensively at all times. Obey all traffic regulations. Avoid excessive speed, high speed cornering, or sudden steering maneuvers because these driving practices could cause you to lose control of your vehicle. **As with any vehicle, a loss of control could result in a collision with other vehicles or objects or cause the vehicle to rollover, particularly if the loss of control causes the vehicle to slide sideways.** Be attentive at all times, and avoid driving when tired. Never drive when under

the influence of alcohol or drugs (including prescription or over-the-counter drugs which may cause drowsiness). Always wear your seat belt as outlined in "Seat belts" in the "Safety — Seats, seat belts and supplemental restraint system" section of this manual, and also instruct your passengers to do so.

Seat belts help reduce the risk of injury in collisions and rollovers. **In a rollover crash, an unbelted or improperly belted person is significantly more likely to be injured or killed than a person properly wearing a seat belt.**

OFF-ROAD RECOVERY

While driving, the right side or left side wheels may unintentionally leave the road surface. If this occurs, maintain control of the vehicle by following the procedure below. Please note that this procedure is only a general guide. The vehicle must be driven as appropriate based on the conditions of the vehicle, road and traffic.

1. Remain calm and do not overreact.
2. Do not apply the brakes.
3. Maintain a firm grip on the steering wheel with both hands and try to hold a straight course.
4. When appropriate, slowly release the accelerator pedal to gradually slow the vehicle.
5. If there is nothing in the way, steer the vehicle to follow the road while the vehicle speed is reduced. Do not attempt to drive the vehicle back onto the road surface until the vehicle speed is reduced.
6. When it is safe to do so, gradually turn the steering wheel until both tires return to the road surface. When all tires are on the road surface, steer the vehicle to stay in the appropriate driving lane.
   - If you decide that it is not safe to return the vehicle to the road surface based on vehicle, road or traffic conditions, gradually slow the vehicle to a stop in a safe place off the road.

RAPID AIR PRESSURE LOSS

Rapid air pressure loss or a "blow-out" can occur if the tire is punctured or is damaged due to hitting a curb or pothole. Rapid air pressure loss can also be caused by driving on under-inflated tires.

Rapid air pressure loss can affect the handling and stability of the vehicle, especially at highway speeds.

Help prevent rapid air pressure loss by maintaining the correct air pressure and visually inspecting the tires for wear and damage. For additional information, refer to "Wheels and tires" in the "Maintenance and do-it-yourself" section of this manual.

If a tire rapidly loses air pressure or "blows-out" while driving, maintain control of the vehicle by following the procedure below. Please note that this procedure is only a general guide. The vehicle must be driven as appropriate based on the conditions of the vehicle, road and traffic.

WARNING

The following actions can increase the chance of losing control of the vehicle if there is a sudden loss of tire air pressure. Losing control of the vehicle may cause a collision and result in personal injury.

- **The vehicle generally moves or pulls in the direction of the flat tire.**
- **Do not rapidly apply the brakes.**
- **Do not rapidly release the accelerator pedal.**
- **Do not rapidly turn the steering wheel.**

1. Remain calm and do not overreact.
2. Maintain a firm grip on the steering wheel with both hands and try to hold a straight course.
3. When appropriate, slowly release the accelerator pedal to gradually slow the vehicle.
4. Gradually steer the vehicle to a safe location off the road and away from traffic if possible.
5. Lightly apply the brake pedal to gradually stop the vehicle.
6. Turn on the hazard warning flashers and contact a roadside emergency service to change the tire. For additional information, refer to "Flat tire" in the "In case of emergency" section of this manual.

DRINKING ALCOHOL/DRUGS AND DRIVING

WARNING

Never drive under the influence of alcohol or drugs. Alcohol in the bloodstream reduces coordination, delays reaction time and impairs judgement. Driving after drinking alcohol increases the likelihood of being involved in an accident injuring yourself and others. Additionally, if you are injured in an accident, alcohol can increase the severity of the injury.

NISSAN is committed to safe driving. However, you must choose not to drive under the influence of alcohol. Every year thousands of people are injured or killed in alcohol-related accidents. Although the local laws vary on what is considered to be legally intoxicated, the fact is that alcohol affects all people differently and most people underestimate the effects of alcohol.

Remember, drinking and driving don't mix! That is true for drugs, too (over-the-counter, prescription, and illegal drugs). Do not drive if your ability to operate your vehicle is impaired by alcohol, drugs, or some other physical condition.

PUSH-BUTTON POWER SWITCH

WARNING

Do not operate the power switch while driving the vehicle except in an emergency. (The EV system shuts down when the power switch is pushed three consecutive times or the power switch is pushed and held for more than 2 seconds.) If the EV system stops while the vehicle is being driven, this could lead to a crash and serious injury.

Before operating the power switch, make sure the vehicle is in the P (Park) position.

NISSAN INTELLIGENT KEY® SYSTEM

The Intelligent Key system allows the driver to start the EV system without taking the key out of a pocket or purse. The operating environment and/or conditions may affect Intelligent Key system operation.

Some indicators and warnings for operation are displayed on the vehicle information display. For additional information, refer to "Vehicle information display" in the "Instruments and controls" section of this manual.

CAUTION

- **Be sure to carry the Intelligent Key with you when operating the vehicle.**
- **Never leave the Intelligent Key inside the vehicle when you leave the vehicle.**

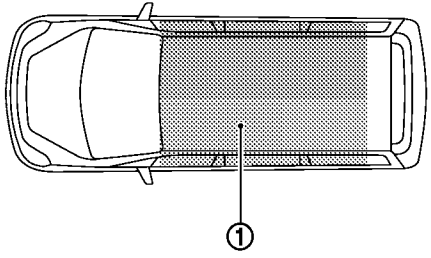

OPERATING RANGE FOR EV START FUNCTION

The Intelligent Key function can only be used for starting the EV system when the Intelligent Key is within the specified operating range ①.

When the Intelligent Key battery is almost discharged or strong radio waves are present near the operating location, the Intelligent Key system's operating range becomes narrower and it may not function properly.

If the Intelligent Key is within the operating range, it is possible for anyone, even someone who does not carry the Intelligent Key, to push the power switch to start the EV system.

- The cargo area is not included in the operating range but the Intelligent Key may function.
- If the Intelligent Key is placed on the instrument panel or inside the glove box or door pocket, the Intelligent Key may not function.
- If the Intelligent Key is placed near a door or window outside the vehicle, the Intelligent Key may not function.

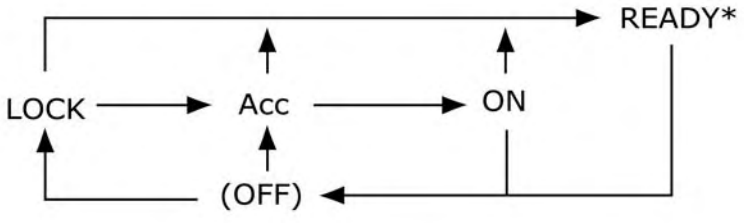

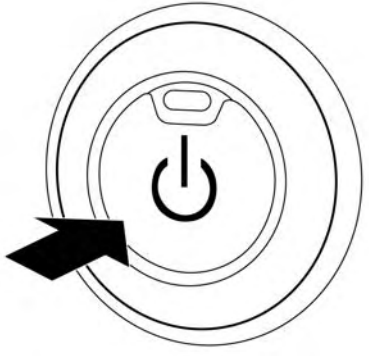

***Push while the brake pedal is depressed.**

POWER SWITCH OPERATION

When the power switch is pushed without depressing the brake pedal, the power switch position will change as follows:

- Push once to change to ACC.
- Push two times to change to ON.
- Push three times to change to OFF.
- Push four times to return to ACC.
- Open or close any door to return to LOCK while in the OFF position.

The power switch illuminates when in the ACC or ON position.

The power lock is designed so that the power switch position cannot be switched to the LOCK position until the vehicle is placed in the P (Park) position.

When the power switch cannot be placed in the LOCK position, proceed as follows:

1. Push the P (Park) position switch on the shift lever to place the vehicle in the P (Park) position.
2. Push the power switch to the OFF position. The power switch will not illuminate.
3. Open the door. The power switch will change to the LOCK position.

POWER SWITCH POSITIONS

LOCK (Normal parking position)

The power switch can only be locked in this position.

The power switch will be unlocked when it is pushed to the ACC position while the driver is carrying the Intelligent Key.

ACC (Accessories)

This position activates electrical accessories, such as the radio, when the EV system is off.

ON

This position turns on the EV system and electrical accessories.

READY (Normal operating position)

This position turns on the EV system and electrical accessories and the vehicle can be driven.

OFF

This position turns off the EV system.

The power switch cannot be placed in the LOCK position until the vehicle is in the P (Park) position.

CAUTION

Do not leave the vehicle with the power switch in the ACC position for an extended period of time. This can discharge the 12-volt battery.

NOTE:
If the power switch is pushed quickly or is pushed twice quickly, the switch may not function even if a chime sound is heard. Push the switch again more slowly.

EMERGENCY EV SHUT OFF

To shut off the EV system in an emergency situation while driving, perform the following procedure:

- Rapidly push the power switch three consecutive times in less than 1.5 seconds, or
- Push and hold the power switch for more than 2 seconds.

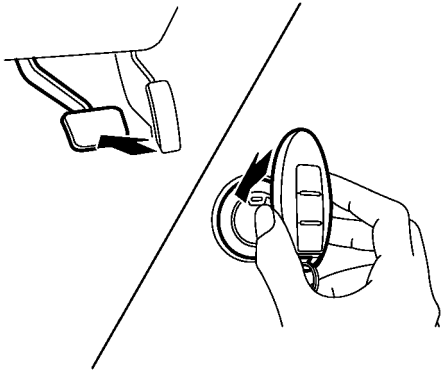

NISSAN INTELLIGENT KEY® BATTERY DISCHARGE

If the Intelligent Key battery is discharged or environmental conditions interfere with the Intelligent Key operation, start the EV system in the READY to drive mode according to the following procedure:

1. Push the P (Park) position switch on the shift lever.
2. Firmly apply the foot brake.
3. Touch the power switch with the Intelligent Key as illustrated. (A chime will sound.)
4. Push the power switch while depressing the brake pedal within 10 seconds after the chime sounds. The power switch position changes to the READY to drive mode.

After step 3 is performed, if the power switch is pushed without depressing the brake pedal, the power switch position will change to ACC.

NOTE:

- **When the power switch is pushed to the ACC or ON position or READY to drive mode by the above procedure, the EV system operation for discharged Intelligent Key system indicator appears on the vehicle information display even if the Intelligent Key is inside the vehicle. This is not a malfunction. To stop the warning indicator from blinking, touch the power switch with the Intelligent Key again.**
- **If the Intelligent Key battery discharge indicator appears on the vehicle information display, replace the battery as soon as possible. For additional information, refer to "NISSAN Intelligent Key® battery replacement" in the "Maintenance and do-it-yourself" section of this manual.**

NISSAN VEHICLE IMMOBILIZER SYSTEM

The NISSAN Vehicle Immobilizer System will not allow the power switch to be placed in the READY to drive position without the use of the registered key.

If the power switch fails to place the vehicle into the READY to drive position using the registered key, it may be due to interference caused by another registered key, an automated toll road device or automated payment device on the key ring. Restart the EV system using the following procedure:

1. Leave the power switch in the ON position for approximately 5 seconds.
2. Place the power switch in the OFF position and wait approximately 10 seconds.
3. Repeat steps 1 and 2 again.
4. Place the power switch in the READY to drive position while holding the device (which may have caused the interference) separate from the registered key.
   If this procedure allows the power switch to be placed in the READY to drive mode, NISSAN recommends placing the registered key on a separate key ring to avoid interference from other devices.

BEFORE STARTING THE EV SYSTEM

- Make sure that the area around the vehicle is clear.
- Check fluid levels such as coolant, brake fluid, and windshield-washer fluid as frequently as possible.
- Check that all windows and lights are clean.
- Visually inspect tires for their appearance and condition. Also check tires for proper inflation.
- Check that all doors are closed.
- Position the seat and adjust the head restraints/headrests.
- Adjust the inside and outside mirrors.
- Fasten seat belts and ask all passengers to do likewise.
- Check the operation of the warning lights when the power switch is pushed to the ON position. For additional information, refer to "Warning lights, indicator lights and audible reminders" in the "Instruments and controls" section of this manual.

STARTING THE EV SYSTEM

1. Confirm the parking brake is applied.
2. Confirm that the vehicle is in the P (Park) position.

   When the power switch is placed in the ON position, the EV is designed not to operate unless the shift lever is in the P (Park) or N (Neutral) positions.

   The Intelligent Key must be carried with you when operating the power switch.
3. Depress the brake pedal and push the power switch to place the EV system in the READY to drive position.

   To place the vehicle in the READY to drive position immediately, push and release the power switch while depressing the brake pedal with the power switch in any position. The READY to drive indicator light in the meter illuminates.
4. To stop the EV system, push the P (Park) position switch on the shift lever, and push the power switch to the OFF position.

NOTE:
Care should be taken to avoid situations that can lead to potential battery discharge and potential no-start conditions such as:

1. **Installation or extended use of electronic accessories that consume battery power when the EV system is not running (phone chargers, GPS, DVD players, etc.).**
2. **The vehicle is not driven regularly and/or only driven short distances.**

In these cases, the battery may need to be charged to maintain battery health.

DRIVING THE VEHICLE

ELECTRIC SHIFT CONTROL SYSTEM

This vehicle is electronically controlled to produce maximum available power and smooth operation.

The recommended operating procedures for this vehicle are shown on the following pages.

Starting the vehicle

1. After placing the vehicle in the READY to drive position, fully depress the foot brake pedal before moving the shift lever to the D (Drive) position.

   The shift lever of this vehicle is designed so that the foot brake pedal must be depressed before shifting from the P (Park) position to any driving position while the power switch is in the ON position.

   The shift lever cannot be moved out of the P (Park) position and into any of the other positions if the power switch is placed in the LOCK, OFF or ACC position or if the key is removed.

2. Keep the foot brake pedal depressed, and move the shift lever to the D (Drive) position.
3. Release the parking brake and foot brake pedal, and then gradually start the vehicle in motion.

WARNING

- **Do not depress the accelerator pedal while shifting from P (Park) or N (Neutral) to the R (Reverse) or D (Drive) position. Always depress the brake pedal until shifting is completed. Failure to do so could cause you to lose control, which could result in an accident.**
- **Never shift to the P (Park) or R (Reverse) position while the vehicle is moving forward and the P (Park) or D (Drive) position while the vehicle is reversing. This could cause you to lose control and have an accident.**
- **Do not shift to the B position abruptly on slippery roads. This may cause a loss of control.**

CAUTION

- **To avoid possible damage to your vehicle, when stopping the vehicle on an uphill grade, do not hold the vehicle by depressing the accelerator pedal. The foot brake should be used for this purpose.**
- **Do not hang items on the shift lever. This may cause an accident due to a sudden start.**

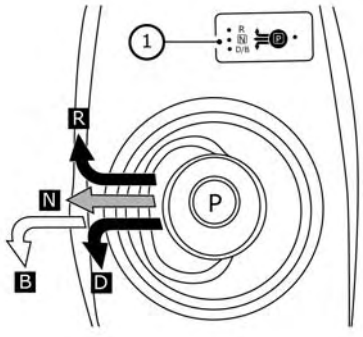

Shifting

To move the shift lever,

➡ : Slide along the gate while the brake pedal is depressed.

⇨ : After sliding, maintain it in the same position until the vehicle is placed in the N (Neutral) position.

⇨ : When in the D (Drive) position, slide along the gate.

NOTE:

- **Confirm that the vehicle is in the desired shift position by checking the shift indicator ① located near the shift lever or the vehicle information display in the meter.**
- **To place the vehicle into the D (Drive) position from the B mode, move the shift lever into the D (Drive) position.**

After placing the vehicle in the READY to drive position, fully depress the brake pedal, and move the shift lever to any of the preferred shift positions.

If the power switch is placed in the OFF or ACC position for any reason while the shift position is in any position other than the P (Park) position, the power switch cannot be placed in the LOCK position.

If the power switch cannot be placed in the LOCK position, perform the following steps:

1. Apply the parking brake when the vehicle is stopped.
2. Place the power switch in the ON position while depressing the foot brake pedal.
3. Push the P (Park) position switch and confirm the vehicle is in the P (Park) position.
4. Place the power switch in the OFF position.

NOTE:
The vehicle automatically applies the P (Park) position when the power switch is in the OFF position.

WARNING

- **The shift lever is always in the center position when released. When the power switch is placed in the READY to drive position, the driver needs to confirm that the vehicle is in the P (Park) position. The indicator next to the "P" by the shift lever is illuminated and the "P" is displayed on the meter. If the vehicle is in the D (Drive) position or R (Reverse) position when the power switch is placed in the READY to drive position, this may cause a sudden start which could result in an accident.**

- **On a hilly road, do not allow the vehicle to roll backwards while in the D (Drive) position or B position or allow the vehicle to roll forward while in the R (Reverse) position. This may cause an accident.**

CAUTION

- **Do not slide the shift lever while pushing the P (Park) position switch. This may damage the electric motor.**
- **When switching to the preferred position by operating the shift lever, check that the shift lever returns to the central position by releasing your hand from the lever. Holding the shift lever in a mid-way position may also damage the shift control system.**
- **Do not operate the shift lever while the accelerator pedal is depressed, except when switching to the B position. This may cause a sudden start which could result in an accident.**

- **The following operations are not allowed because excessive force would be applied to the traction motor and this may result in damage to the vehicle:**
  - **Moving the shift lever to the R (Reverse) position when driving forward**
  - **Moving the shift lever to the D (Drive) position when reversing**

  If these operations are attempted, a chime sounds and the vehicle shifts to the N (Neutral) position.

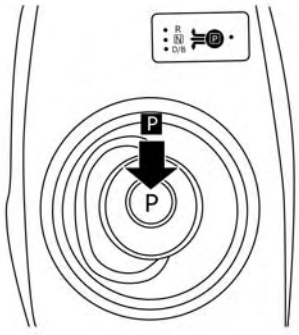

P (Park):

Use this shift position when the vehicle is parked or when placing the vehicle in the READY to drive position. Make sure that the vehicle is completely stopped. **In order to switch to the P (Park) position, push the P (Park) position switch as shown in the illustration above once the vehicle has come to a complete stop. If the P (Park) position switch is pushed while the vehicle is in motion, a chime sounds and the current shift position is maintained.** After switching to the P (Park) position, apply the parking brake. When parking on a

hill, apply the parking brake first while keeping the foot brake pedal depressed then push the P (Park) position switch and place the vehicle in the P (Park) position. For additional information, refer to "Parking brake" in this section.

NOTE:

- **While the vehicle is stationary, if the shift position is placed in any position other than the P (Park) position when the power switch is set to OFF, it will automatically switch to the P (Park) position.**
- **If the P (Park) position switch is pushed while sliding the shift lever, the shift position will not switch to the P (Park) position. When pushing the P (Park) position switch be sure to first allow the shift lever to return to its center position.**

R (Reverse):

Use this position to back up. Make sure that the vehicle is completely stopped before selecting the R (Reverse) position. **If the vehicle is placed in the D (Drive) position while reversing, the chime will sound and the vehicle will switch into the N (Neutral) position.**

N (Neutral):

Neither forward nor reverse gear is engaged. The vehicle can be placed in the READY to drive position in this position.

Do not shift to the N (Neutral) position while driving. The regenerative brake system does not operate in the N (Neutral) position. However, the vehicle brakes will still stop the car.

D (Drive):

Use this position for all normal forward driving. **If the vehicle is placed in the D (Drive) position while reversing, the chime will sound and the vehicle will switch into the N (Neutral) position.**

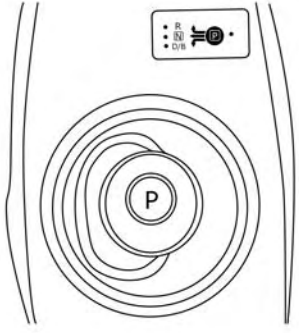

B mode:

The B mode engages the regenerative braking system more aggressively on downhill slopes, and helps reduce brake use. It is activated by moving the shift lever left and down. The shift lever will then return to the center position. For additional information, refer to "Brake system" in this section.

ECO mode:

Use the ECO mode in order to help extend the driving range.

In comparison to the D (Drive) position, the ECO mode consumes less power for the traction motor and enables the range of the vehicle to be extended. To turn on the ECO mode, push the ECO mode switch located near the shift lever. For additional information, refer to "ECO switch" in the "Instruments and controls" section of this manual.

PARKING BRAKE

WARNING

- **Be sure the parking brake is released before driving. Failure to do so could cause brake failure and lead to an accident.**
- **Do not release the parking brake from outside the vehicle.**
- **To help avoid risk of injury or death through unintended operation of the vehicle and/or its systems, do not leave children, people who require the assistance of others or pets unattended in your vehicle. Additionally, the temperature inside a closed vehicle on a warm day can quickly become high enough to cause a significant risk of injury or death to people and pets.**
- **When leaving the vehicle, apply the parking brake and push the P (Park) position switch on the shift lever.**

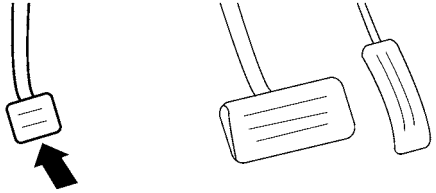

PEDAL TYPE

To engage: Firmly depress the parking brake.

To release:

1. Firmly apply the foot brake.
2. Move the shift lever to the P (Park) position.
3. Firmly depress the parking brake pedal and it will release.
4. Before driving, be sure the brake warning light goes out.

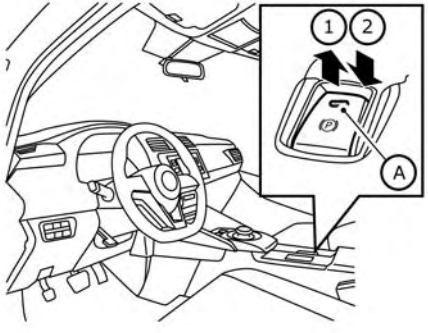

SWITCH TYPE (MODELS WITH ELECTRONIC PARKING BRAKE SYSTEM)

The electronic parking brake can be applied or released automatically or by operating the electronic parking brake switch.

Automatic operation

The electronic parking brake is automatically released as soon as the vehicle starts and the accelerator pedal is depressed.

In order for the electronic parking brake to disable when the driver pushes the accelerator, the driver's seat belt must be fastened.

WARNING

- **The electronic parking brake will not be automatically applied when the EV system is stopped without using the power switch (for example, by EV system stalling).**
- **Before leaving the vehicle, move the shift lever to the P (Park) position and check that the electronic parking brake indicator light (Ⓟ or PARK) is illuminated to confirm that the electronic parking brake is applied. The electronic parking brake indicator light (Ⓟ or PARK) will remain on for a period of time after the driver's door is locked.**

CAUTION

When parking in an area where the outside temperature is below 32°F (0°C), do not apply the parking brake to prevent it from freezing.
For safe parking, place the shift lever in the P (Park) position and securely block the wheels.

NOTE:

- **If a malfunction occurs in the electronic parking brake system (for example, due to battery discharge), it is recommended that you visit a NISSAN certified LEAF dealer.**
- **If the shift lever is moved to the P (Park) position when the brake force is maintained by the automatic brake hold function, the electronic parking brake will apply automatically.**
- **If the driver's seat belt is unfastened when the brake force is maintained by the automatic brake hold function, the electronic parking brake will apply automatically.**
- **When the ICC system (if so equipped) is canceled under the following conditions at a standstill, the electronic parking brake is automatically activated:**
  - **Any door is open.**
  - **The driver's seat belt is not fastened.**

- **Your vehicle has been stopped by the ICC system for approximately 3 minutes or longer.**
- **The shift lever is not in the D (Drive) position or B mode.**
- **The VDC system is turned off.**
- **When distance measurement becomes impaired due to adhesion of dirt or obstruction to the sensor.**
- **When the radar signal is temporarily interrupted.**

Manual operation

The electronic parking brake will not be automatically applied if the EV system is stopped without using the power switch (for example, by EV system stalling). In such a case, you have to apply the parking brake manually.

To apply: Pull the switch up ①. The indicator light Ⓐ will illuminate.

To release: With the power switch in the ON position, depress the brake pedal and push the switch down ②. The indicator light Ⓐ will turn off.

Before driving, check that the electronic parking brake indicator light (Ⓟ or PARK) goes out. For additional information, refer to "Warning lights, indicator lights and audible reminders" in the "Instruments and controls" section of this manual.

NOTE:

- **A buzzer will sound if the vehicle is driven without releasing the parking brake. For additional information, refer to "Warning lights, indicator lights and audible reminders" in the "Instruments and controls" section of this manual.**
- **While the electronic parking brake is applied or released, an operating sound is heard from the lower side of the rear seat. This is normal and does not indicate a malfunction.**
- **When the electronic parking brake is frequently applied and released in a short period of time, the parking brake may not operate in order to prevent the parking brake system from overheating. If this occurs, operate the electronic parking brake switch again after waiting approximately 1 minute.**
- **If the electronic parking brake must be applied while driving in an emergency, pull up and hold the electronic parking brake switch. When you release the electronic parking brake switch, the parking brake will be released.**
- **While pulling up the electronic parking brake switch during driving, the parking brake is applied and a chime sounds. The electronic parking brake indicator light (Ⓟ or PARK) in the meter and in the electronic parking brake switch illuminates. This does not indicate a malfunction. The electronic parking brake indicator light (Ⓟ or PARK) in the meter and in the electronic parking brake switch turns off when the parking brake is released.**
- **When pulling the electronic parking brake switch up with the power switch in the OFF or ACC position, the electronic parking brake switch indicator light will continue to illuminate for a short period of time.**

E-PEDAL SYSTEM

WARNING

Never rely solely on the e-Pedal system, as there is a performance limit to the system function. Always drive carefully and attentively. The brake pedal should be operated to slow or stop the vehicle, depending on traffic or road conditions.

The e-Pedal system enables the driver to slow or stop the vehicle or to keep the vehicle stopped by operating only the accelerator pedal. This systems helps to keep the driver from moving his/her foot between the accelerator pedal and the brake pedal.

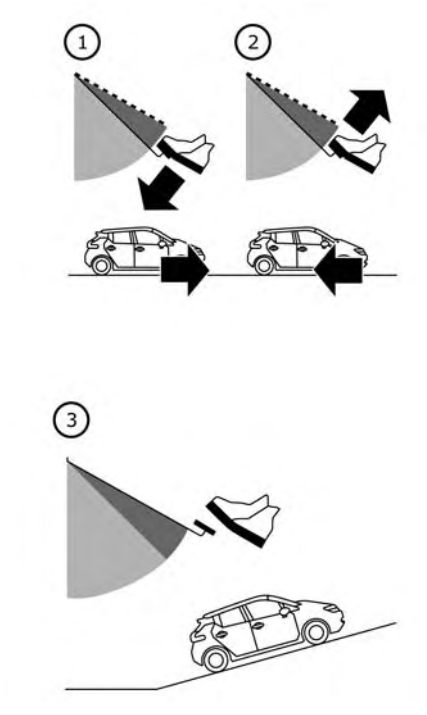

E-PEDAL SYSTEM OPERATION

1. Acceleration
2. Deceleration (instead of brake pedal)
3. Making a stop (instead of brake pedal

When the e-Pedal system is activated, the regenerative brake is enhanced and the driver can adjust the vehicle speed by only depressing or returning the accelerator pedal. When you release (take your foot off) the accelerator pedal, the vehicle slows down and comes to a stop smoothly without depressing the brake pedal. After a stop, the vehicle remains at a stop automatically.

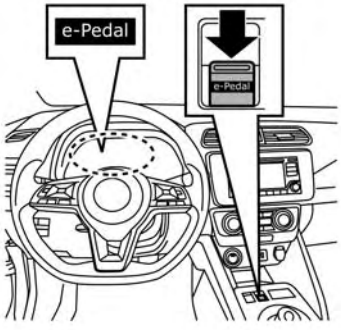

To activate or deactivate the e-Pedal system, place the power switch in the ON position and pull the e-Pedal switch located on the center console. The e-Pedal system turns on or off each time the e-Pedal switch is pulled. (The e-Pedal indicator in the vehicle information display shows the status of the e-Pedal system.)

To turn the e-Pedal system off while the vehicle is stopped by the e-Pedal system, depress the brake pedal and then pull the e-Pedal switch.

NOTE:

- **When the e-Pedal system is switched on or off, the degree of vehicle deceleration changes.**
- **The e-Pedal system automatically turns off when the EV system restarts.**
- **To keep the e-Pedal system activated even after the EV system restarts, turn on "Retain Mode" in the "Driver Assistance" menu of the vehicle information display. For additional information, refer to "Vehicle information display" in the "Instruments and controls" section of this manual.**
- **The setting for "Retain Mode" does not reset after selecting "Factory Reset" in the "Settings" menu of the vehicle information display. For additional information, refer to "Vehicle information display" in the "Instruments and controls" section of this manual.**

When the e-Pedal system is activated, the characteristics of the accelerator pedal change significantly and the accelerator pedal operates differently than a conventional accelerator pedal operates. Be sure to confirm the status of the e-Pedal system in the vehicle information display before driving.

The e-Pedal system provides the following driving features:

When driving and stopping the vehicle:

- Depressing or returning the accelerator pedal changes the degree of acceleration and deceleration accordingly.
- Returning the accelerator pedal generates more deceleration than normal. (The maximum deceleration changes according to the vehicle speed.)
- Releasing (taking your foot off) the accelerator pedal reduces the vehicle speed until the vehicle comes to a stop.
- The vehicle's brake lights illuminate when the deceleration level reaches an ordinary braking operation.

If the deceleration is not sufficient when the accelerator pedal is returned or released, depress the brake pedal. The brake pedal can be operated to reduce the vehicle speed in the same way as normal even when the e-Pedal system is activated.

When restarting the vehicle:

- After the vehicle comes to a stop by the e-Pedal system function, the vehicle remains at a stop as long as the accelerator pedal is released.
- The vehicle's brake lights remain illuminated when the vehicle is stopped by the e-Pedal system.
- Depress the accelerator pedal to start the vehicle again from a stop.

When the vehicle needs to be stopped for a certain period of time, place the vehicle in the P (Park) position and apply the parking brake.

CAUTION

When the e-Pedal system is turned off, remember to depress the brake pedal firmly to prevent the vehicle from moving with the shift lever in any position other than P (Park).

When backing up the vehicle:

- With the shift lever in the R (Reverse) position, operating the accelerator pedal adjusts the vehicle speed (acceleration, deceleration, or stopping) in the same way as the D (Drive) position.

Other driving tips for the e-Pedal system:

- For smooth deceleration when the e-Pedal system is activated, it is recommended that you adjust the accelerator pedal by either depressing or returning, not releasing, the pedal.
- Moving the shift lever from D (Drive) to B mode or from B mode to D (Drive) does not affect the e-Pedal system feature.
- The e-Pedal system does not function under the following conditions:
  - When the vehicle is placed in the P (Park) or N (Neutral) position
  - When cruise control (if so equipped), ProPILOT™ Assist (if so equipped), or Automatic Emergency Braking (if so equipped) operates

E-PEDAL SYSTEM LIMITATIONS

WARNING

Listed below are the system limitations for the e-Pedal system. Failure to operate the vehicle in accordance with these system limitations could result in serious injury or death.

- **If the "Press brake pedal to prevent rolling" warning message appears in the vehicle information display, depress the brake pedal. The vehicle may start moving.**
- **If the deceleration force provided by the e-Pedal system is not sufficient, depress the brake pedal.**
- **If the vehicle starts to move while it is stopped by the e-Pedal system, depress the brake pedal immediately.**
- **Under the following conditions, place the vehicle in the P (Park) position and make sure the parking brake is securely applied. The vehicle may start moving suddenly.**
  - **When getting in and out of the vehicle**
  - **When loading and unloading the vehicle**

- **When stopping the vehicle for a long period of time**

- **Under the following conditions, the e-Pedal system may not decelerate or stop the vehicle sufficiently. Depress the brake pedal whenever necessary.**
  - **When excessively heavy baggage is loaded in the vehicle**
  - **When driving on steep downhill roads**
  - **When driving on icy roads**
- **On a slope, the e-Pedal system may not stop the vehicle completely or may not keep the vehicle stopped. Depress the brake pedal whenever necessary.**

CAUTION

- **Turn the e-Pedal system off and place the vehicle in the N (Neutral) position under the following conditions:**
  - **When the vehicle enters an automatic car wash**
  - **When the vehicle is towed**
- **Be careful not to operate the e-Pedal switch mistakenly or unintentionally.**

SYSTEM MALFUNCTION

If the e-Pedal system malfunctions, the "e-Pedal system failure! Press brake pedal to slow or stop" warning message appears in the vehicle information display. When the warning message appears, the e-Pedal system will be turned off automatically. Have the system checked as soon as possible. It is recommended that you visit a NISSAN certified LEAF dealer for this service.

LANE DEPARTURE WARNING (LDW) (IF SO EQUIPPED)

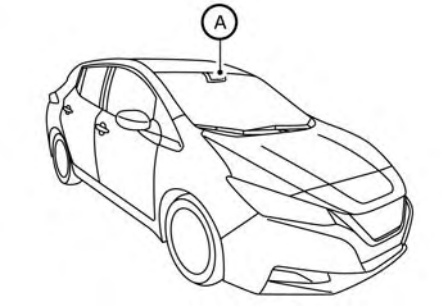

WARNING

Failure to follow the warnings and instructions for proper use of the LDW system could result in serious injury or death.

- **This system is only a warning device to inform the driver of a potential unintended lane departure. It will not steer the vehicle or prevent loss of control. It is the driver's responsibility to stay alert, drive safely, keep the vehicle in the traveling lane, and be in control of the vehicle at all times.**

The LDW system will operate when the vehicle is driven at speeds of approximately 37 mph (60 km/h) and above, and only when the lane markings are clearly visible on the road.

The LDW system monitors the lane markers on the traveling lane using the camera unit Ⓐ located above the inside mirror.

The LDW system warns the driver with an indicator in the vehicle information display and a steering vibration that the vehicle is beginning to leave the driving lane. For additional information, refer to "LDW system operation" in this section.

LDW SYSTEM OPERATION

The LDW system provides a lane departure warning function when the vehicle is driven at speeds of approximately 37 mph (60 km/h) and above and the lane markings are clear. When the vehicle approaches either the left or the right side of the traveling lane, the steering wheel will vibrate and the LDW indicator in the vehicle information display will blink to alert the driver.

The warning function will stop when the vehicle returns inside of the lane markers.

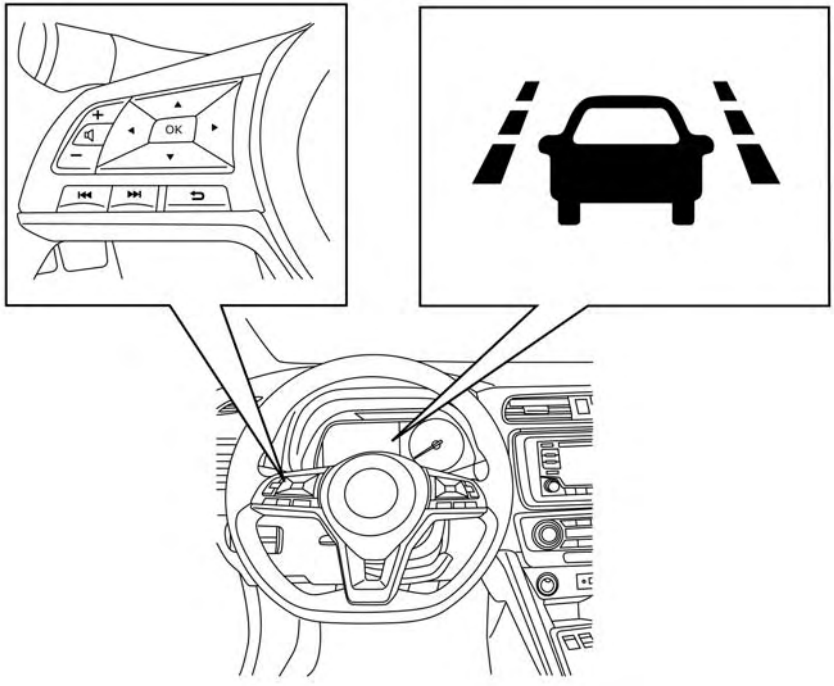

HOW TO ENABLE/DISABLE THE LDW SYSTEM

Perform the following steps to enable or disable the LDW system:

1. Press the ◀▶ button until "Settings" displays in the vehicle information display. Use the ▲▼ button to select "Driver Assistance." Then press the OK button.
2. Select "Lane" and press the OK button.
3. Select "Lane Departure Warning" and use the OK button to turn the system on or off.

LDW SYSTEM LIMITATIONS

WARNING

Listed below are the system limitations for the LDW system. Failure to follow the warnings and instructions for proper use of the LDW system could result in serious injury or death.

- **The system will not operate at speeds below approximately 37 mph (60 km/h) or if it cannot detect lane markers.**

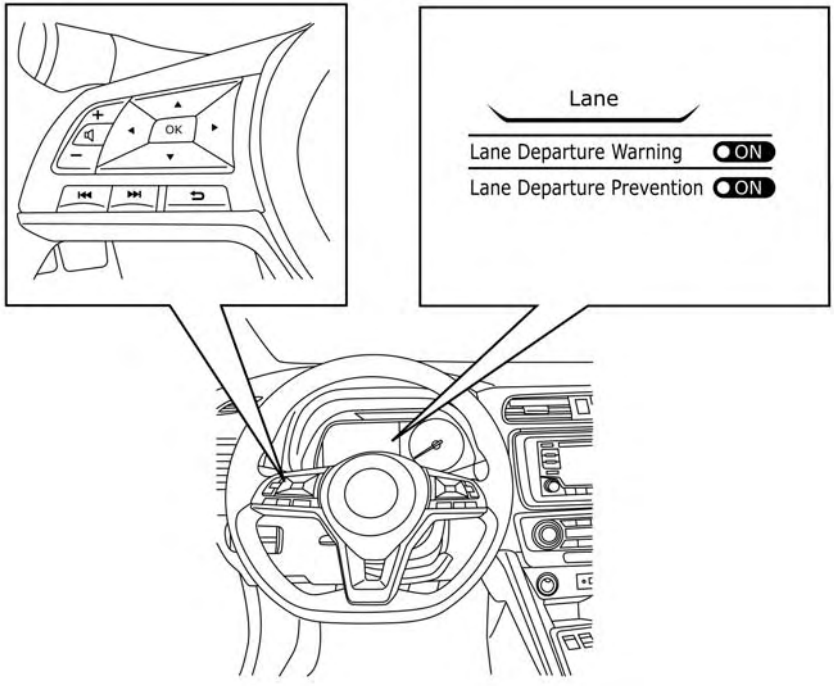

- **Do not use the LDW system under the following conditions as it may not function properly:**
  - **During bad weather (rain, fog, snow, etc.).**
  - **When driving on slippery roads, such as on ice or snow.**
  - **When driving on winding or uneven roads.**
  - **When there is a lane closure due to road repairs.**
  - **When driving in a makeshift or temporary lane.**
  - **When driving on roads where the lane width is too narrow.**
  - **When driving without normal tire conditions (for example, tire wear, low tire pressure, installation of spare tire, tire chains, nonstandard wheels).**
  - **When the vehicle is equipped with non-original brake parts or suspension parts.**
  - **When you are towing a trailer or other vehicle.**

- **The system may not function properly under the following conditions:**
  - **On roads where there are multiple parallel lane markers; lane markers that are faded or not painted clearly; yellow painted lane markers; non-standard lane markers; or lane markers covered with water, dirt, snow, etc.**
  - **On roads where the discontinued lane markers are still detectable.**
  - **On roads where there are sharp curves.**
  - **On roads where there are sharply contrasting objects, such as shadows, snow, water, wheel ruts, seams or lines remaining after road repairs. (The LDW system could detect these items as lane markers.)**
  - **On roads where the traveling lane merges or separates.**
  - **When the vehicle's traveling direction does not align with the lane marker.**
  - **When traveling close to the vehicle in front of you, which obstructs the lane camera unit detection range.**
  - **When rain, snow, dirt or an object adheres to the windshield in front of the lane camera unit.**
  - **When the headlights are not bright due to dirt on the lens or if the aiming is not adjusted properly.**
  - **When strong light enters the lane camera unit (for example, the light directly shines on the front of the vehicle at sunrise or sunset).**
  - **When a sudden change in brightness occurs (for example, when the vehicle enters or exits a tunnel or under a bridge).**

SYSTEM TEMPORARILY UNAVAILABLE

If the vehicle is parked in direct sunlight under high temperature conditions (over approximately 104°F [40°C]) and then started, the LDW system may be deactivated automatically and the following message will appear in the vehicle information display: "Unavailable: High Cabin Temp."

When the interior temperature is reduced, the LDW system will resume operating automatically

The LDW system is not designed to warn under the following conditions:

- When you operate the lane change signal and change traveling lanes in the direction of the signal. (The LDW system will become operable again approximately 2 seconds after the lane change signal is turned off.)
- When the vehicle speed lowers to less than approximately 37 mph (60 km/h).

After the above conditions have finished and the necessary operating conditions are satisfied, the LDW functions will resume.

SYSTEM MALFUNCTION

If the LDW system malfunctions, it will cancel automatically and "Malfunction: See Owner's Manual" will appear in the vehicle information display. If "Malfunction: See Owner's Manual" appears in the vehicle information display, pull off the road to a safe location and stop the vehicle. Place the shift lever in the P (Park) position and the power switch in the OFF position and restart the EV system. If "Malfunction: See Owner's Manual" continues to appear in the vehicle information display, have the system checked. It is recommended that you visit a NISSAN certified LEAF dealer for this service.

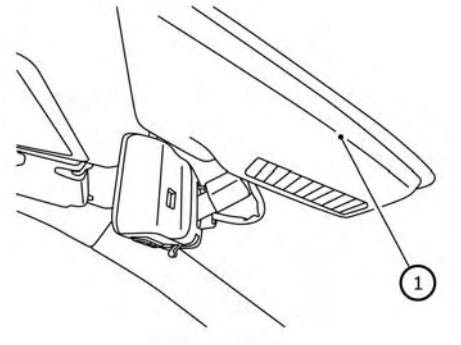

SYSTEM MAINTENANCE

The lane camera unit ① for the LDW system is located above the inside mirror. To keep the proper operation of the LDW system and prevent a system malfunction, be sure to observe the following:

- Always keep the windshield clean.
- Do not attach a sticker (including transparent material) or install an accessory near the camera unit.
- Do not place reflective materials, such as white paper or a mirror, on the instrument panel. The reflection of sunlight may adversely affect the camera unit's capability of detecting the lane markers.
- Do not strike or damage the areas around the camera unit. Do not touch the camera lens or remove the screw located on the camera unit. If the camera unit is damaged due to an accident, it is recommended that you visit a NISSAN certified LEAF dealer.

INTELLIGENT LANE INTERVENTION (I-LI) (IF SO EQUIPPED)

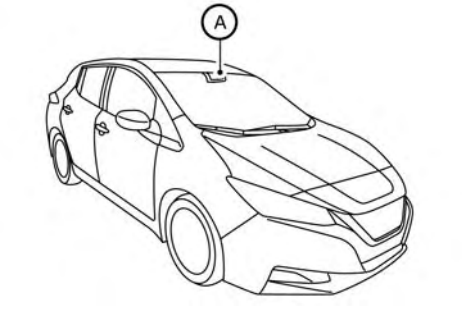

WARNING

Failure to follow the warnings and instructions for proper use of the I-LI system could result in serious injury or death.

- **The I-LI system will not steer the vehicle or prevent loss of control. It is the driver's responsibility to stay alert, drive safely, keep the vehicle in the traveling lane, and be in control of the vehicle at all times.**
- **The I-LI system is primarily intended for use on well-developed freeways or highways. It may not detect the lane markers in certain road, weather, or driving conditions.**

The I-LI system must be turned on with the ProPILOT™ Assist switch on the steering wheel every time the power switch is placed in the ON position.

The I-LI system will operate when the vehicle is driven at speeds of approximately 37 mph (60 km/h) and above, and only when the lane markings are clearly visible on the road.

The I-LI system warns the driver when the vehicle has left the center of the traveling lane with an indicator in the vehicle information display and a steering vibration. The system helps assist the driver to return the vehicle to the center of the traveling lane by applying the brakes to the left or right wheels individually (for a short period of time).

The I-LI system monitors the lane markers on the traveling lane using the camera unit Ⓐ located above the inside mirror.

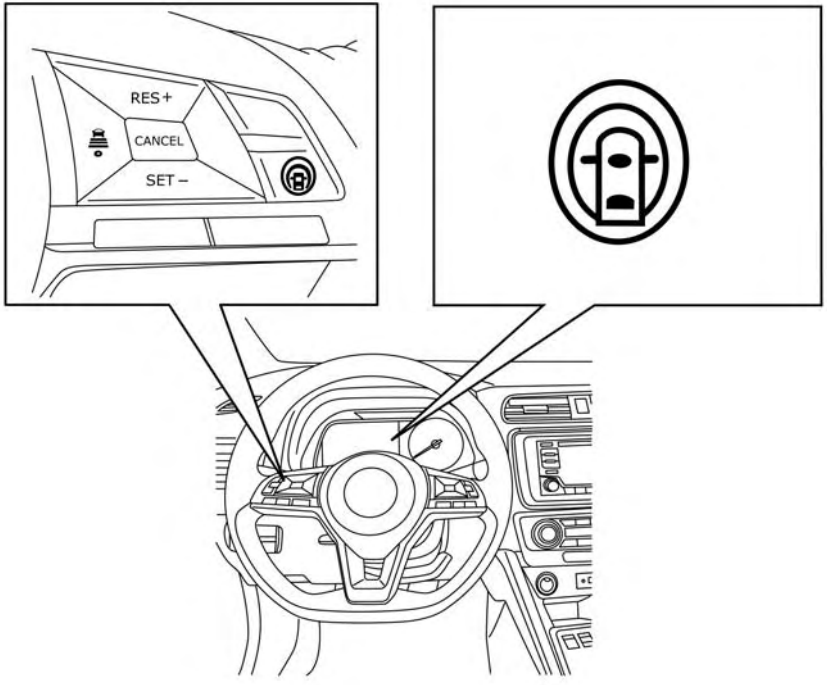

The I-LI system operates above approximately 37 mph (60 km/h). When the vehicle approaches either the left or the right side of the traveling lane, the steering wheel will vibrate and the I-LI indicator (orange) in the vehicle information display will blink to alert the driver. Then, the I-LI system will automatically apply the brakes for a short period of time to help assist the driver to return the vehicle to the center of the traveling lane.

To turn on the I-LI system, push the ProPILOT™ Assist switch on the steering wheel. Push the ProPILOT Assist switch again to turn off the I-LI system.

I-LI SYSTEM OPERATION

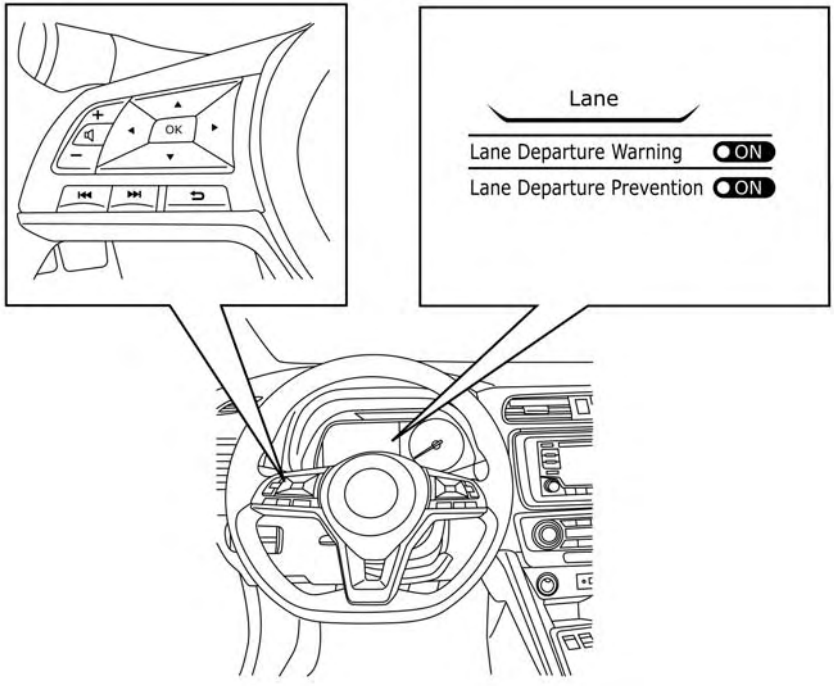

HOW TO ENABLE/DISABLE THE I-LI SYSTEM

Perform the following steps to enable or disable the I-LI system:

1. Press the ◀▶ button until "Settings" displays in the vehicle information display. Use the ▲▼ button to select "Driver Assistance." Then press the OK button.
2. Select "Lane" and press the OK button.
3. Select "Lane Departure Prevention" and use the OK button to turn the system on or off.

NOTE:
Turning on the ProPILOT™ Assist system (if so equipped) will turn on the I-LI system at the same time. For additional information, refer to "ProPILOT™ Assist" in this section.

I-LI SYSTEM LIMITATIONS

WARNING

Listed below are the system limitations for the I-LI system. Failure to follow the warnings and instructions for proper use of the I-LI system could result in serious injury or death.

- **The I-LI system may activate if you change lanes without first activating your turn signal or, for example, if a construction zone directs traffic to cross an existing lane marker. If this occurs you may need to apply corrective steering to complete your lane change.**
- **Because the I-LI may not activate under the road, weather, and lane marker conditions described in this section, it may not activate every time your vehicle begins to leave its lane and you will need to apply corrective steering.**
- **When the I-LI system is operating, avoid excessive or sudden steering maneuvers. Otherwise, you could lose control of the vehicle.**
- **The I-LI system will not operate at speeds below approximately 37 mph (60 km/h) or if it cannot detect lane markers.**
- **Do not use the I-LI system under the following conditions as it may not function properly:**
  - **During bad weather (rain, fog, snow, etc.).**
  - **When driving on slippery roads, such as on ice or snow.**
  - **When driving on winding or uneven roads.**
  - **When there is a lane closure due to road repairs.**
  - **When driving in a makeshift or temporary lane.**
  - **When driving on roads where the lane width is too narrow.**
  - **When driving without normal tire conditions (for example, tire wear, low tire pressure, installation of spare tire, tire chains, nonstandard wheels).**
  - **When the vehicle is equipped with nonoriginal brake parts or suspension parts.**
  - **When you are towing a trailer or other vehicle.**
  - **On roads where there are multiple parallel lane markers; lane markers that are faded or not painted clearly; yellow painted lane markers; non-standard lane markers; or lane markers covered with water, dirt, snow, etc.**
  - **On roads where discontinued lane markers are still detectable.**
  - **On roads where there are sharp curves.**
  - **On roads where there are sharply contrasting objects, such as shadows, snow, water, wheel ruts, seams or lines remaining after road repairs. (The I-LI system could detect these items as lane markers.)**
  - **On roads where the traveling lane merges or separates.**
  - **When the vehicle's traveling direction does not align with the lane marker.**
  - **When traveling close to the vehicle in front of you, which obstructs the lane camera unit detection range.**
  - **When rain, snow or dirt adheres to the windshield in front of the lane camera unit.**

- **When the headlights are not bright due to dirt on the lens or if the aiming is not adjusted properly.**
- **When strong light enters the lane camera unit (for example, the light directly shines on the front of the vehicle at sunrise or sunset).**
- **When a sudden change in brightness occurs (for example, when the vehicle enters or exits a tunnel or under a bridge).**

While the I-LI system is operating, you may hear a sound of brake operation. This is normal and indicates that the I-LI system is operating properly.

SYSTEM TEMPORARILY UNAVAILABLE

Condition A:

The warning and assist functions of the I-LI system are not designed to work under the following conditions:

- When you operate the lane change signal and change the traveling lanes in the direction of the signal. (The I-LI system will be deactivated for approximately 2 seconds after the lane change signal is turned off.)
- When the vehicle speed lowers to less than approximately 37 mph (60 km/h).

After the above conditions have finished and the necessary operating conditions are satisfied, the warning and assist functions will resume.

Condition B:

The assist function of the I-LI system is not designed to work under the following conditions (warning is still functional):

- When the brake pedal is depressed.
- When the steering wheel is turned as far as necessary for the vehicle to change lanes.
- When the vehicle is accelerated during I-LI system operation.
- When the Intelligent Cruise Control (ICC) approach warning occurs.
- When the hazard warning flashers are operated.
- When driving on a curve at high speed.

After the above conditions have finished and the necessary operating conditions are satisfied, the I-LI system application of the brakes will resume.

Condition C:

If the following messages appear in the vehicle information display, a chime will sound and the I-LI system will be turned off automatically.

- "Not Available - Poor Road Conditions": When the VDC system (except Traction Control System [TCS] function) or ABS operates.
- "Currently not available": When the VDC system is turned off.

Action to take:

When the above conditions no longer exist, turn off the I-LI system. Push the ProPILOT™ Assist switch to turn the I-LI system back on.

Temporary disabled status at high temperature:

If the vehicle is parked in direct sunlight under high temperature conditions (over approximately 104°F [40°C]) and then the I-LI system is turned on, the I-LI system may be deactivated automatically and the

following message will appear on the vehicle information display: "Unavailable: High Cabin Temperature." When the interior temperature is reduced, the system will resume operating automatically.

SYSTEM MALFUNCTION

If the I-LI system malfunctions, it will cancel automatically. The I-LI system warning light (orange) will illuminate in the display.

If the I-LI system warning light (orange) illuminates in the display, pull off the road to a safe location and stop the vehicle. Turn the EV system off and restart the EV system. If the I-LI system warning light (orange) continues to illuminate, have the I-LI system checked. It is recommended that you visit a NISSAN certified LEAF dealer for this service.

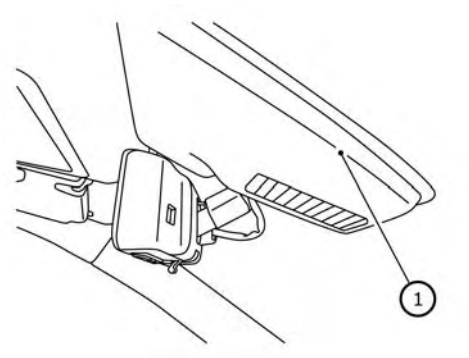

SYSTEM MAINTENANCE

The lane camera unit ① for the I-LI system is located above the inside mirror. To keep the proper operation of the I-LI system and prevent a system malfunction, be sure to observe the following:

- Always keep the windshield clean.
- Do not attach a sticker (including transparent material) or install an accessory near the camera unit.
- Do not place reflective materials, such as white paper or a mirror, on the instrument panel. The reflection of sunlight may adversely affect the camera unit's capability of detecting the lane markers.
- Do not strike or damage the areas around the camera unit. Do not touch the camera lens or remove the screw located on the camera unit. If the camera unit is damaged due to an accident, it is recommended that you visit a NISSAN certified LEAF dealer.

BLIND SPOT WARNING (BSW) (IF SO EQUIPPED)

WARNING

Failure to follow the warnings and instructions for proper use of the BSW system could result in serious injury or death.

- **The BSW system is not a replacement for proper driving procedures and is not designed to prevent contact with vehicles or objects. When changing lanes, always use the side and rear mirrors and turn and look in the direction your vehicle will move to ensure it is safe to change lanes. Never rely solely on the BSW system.**

The BSW system helps alert the driver of other vehicles in adjacent lanes when changing lanes.

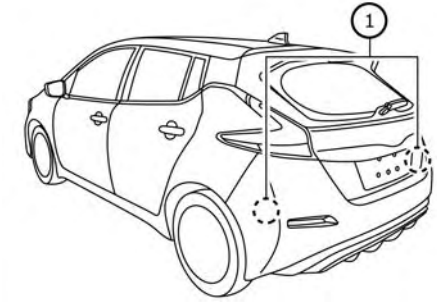

The BSW system uses radar sensors ① installed near the rear bumper to detect other vehicles in an adjacent lane.

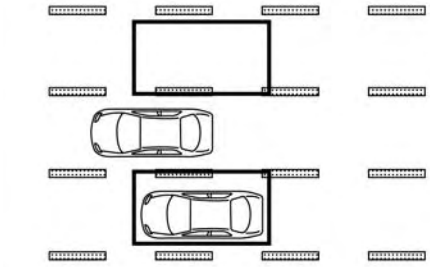

Detection zone

The radar sensors can detect vehicles on either side of your vehicle within the detection zone shown as illustrated. This detection zone starts from the outside mirror of your vehicle and extends approximately 10 ft (3.0 m) behind the rear bumper, and approximately 10 ft (3.0 m) sideways.

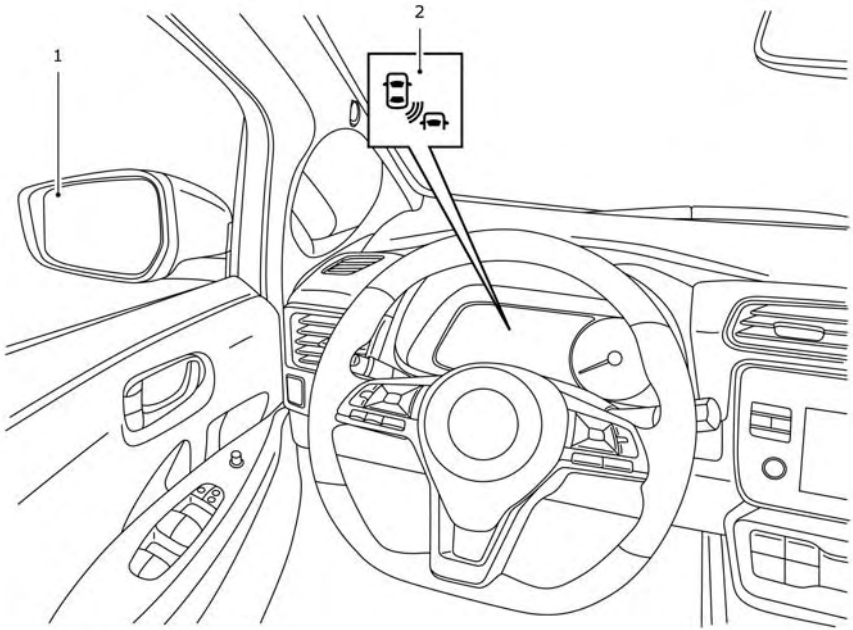

1. Side BSW/RCTA Indicator Light
2. BSW/RCTA Indicator

BSW SYSTEM OPERATION

The BSW system operates above approximately 20 mph (32 km/h).

If the radar sensors detect a vehicle in the detection zone, the side BSW/RCTA indicator light (1) illuminates. If the turn signal is then activated, the system chimes (twice), the side BSW/RCTA indicator light flashes, and the BSW/RCTA indicator (2) illuminates (yellow) in the vehicle information display. The side BSW/RCTA indicator light continues to flash until the detected vehicle leaves the detection zone.

The side BSW/RCTA indicator light illuminates for a few seconds when the power switch is placed in the ON position.

The brightness of the side BSW/RCTA indicator light is adjusted automatically depending on the brightness of the ambient light.

If a vehicle comes into the detection zone after the driver activates the turn signal, then only the side BSW/RCTA indicator light flashes and no chime sounds. For additional information, refer to "BSW driving situations" in this section

The BSW system automatically turns on every time the EV system is started, as long as it is activated using the settings menu on the vehicle information display.

HOW TO ENABLE/DISABLE THE BSW SYSTEM

Perform the following steps to enable or disable the BSW system:

1. Press the ◀▶ button until "Settings displays in the vehicle information display. Use the ▲▼ button to select "Driver Assistance." Then press the OK button.
2. Select "Blind Spot" and press the OK button.
3. Select "Blind Spot Warning" and use the OK button to turn the system on or off.

NOTE:
When enabling/disabling the system, the system will retain current settings even if the EV system is restarted.

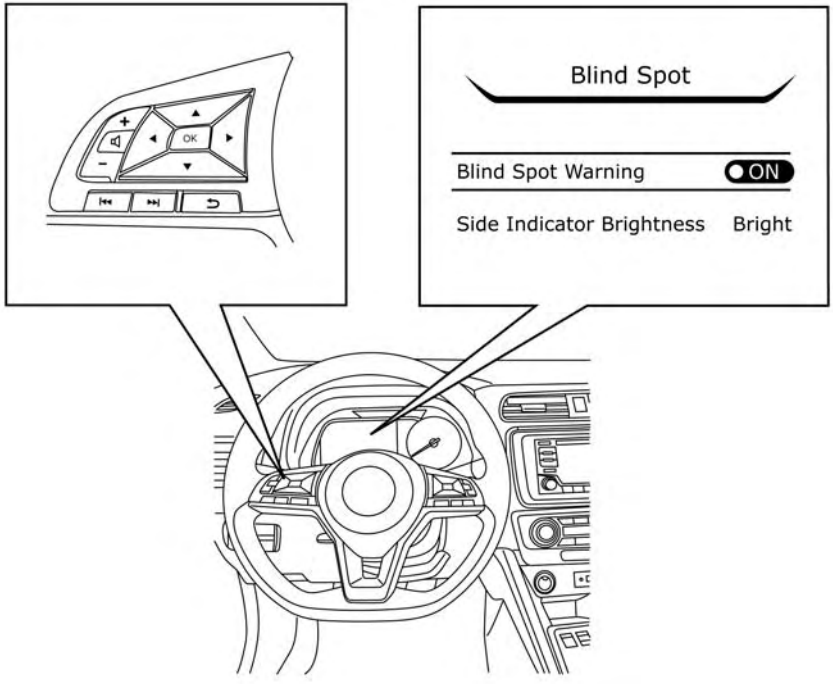

BSW SYSTEM LIMITATIONS

WARNING

Listed below are the system limitations for the BSW system. Failure to operate the vehicle in accordance with these system limitations could result in serious injury or death.

- **The BSW system cannot detect all vehicles under all conditions.**
- **The radar sensors may not be able to detect and activate BSW when certain objects are present such as:**
  - **Pedestrian, bicycles, animals.**
  - **Vehicles such as motorcycles, low height vehicles, or high ground clearance vehicles.**
  - **Oncoming vehicles.**
  - **Vehicles remaining in the detection zone when you accelerate from a stop.**
  - **A vehicle merging into an adjacent lane at a speed approximately the same as your vehicle.**
  - **A vehicle approaching rapidly from behind.**
  - **A vehicle which your vehicle overtakes rapidly.**
  - **A vehicle that passes through the detection zone quickly.**
  - **When overtaking several vehicles in a row, the vehicles after the first vehicle may not be detected if they are traveling close together.**
- **The radar sensor's detection zone is designed based on a standard lane width. When driving in a wider lane, the radar sensors may not detect vehicles in an adjacent lane. When driving in a narrow lane, the radar sensors may detect vehicles driving two lanes away.**
- **The radar sensors are designed to ignore most stationary objects; however, objects such as guardrails, walls, foliage and parked vehicles may occasionally be detected. This is a normal operation condition.**
- **The following conditions may reduce the ability of the radar to detect other vehicles:**
  - **Severe weather**
  - **Road spray**
  - **Ice/frost/dirt/snow build-up on the vehicle**
- **Do not attach stickers (including transparent material), install accessories or apply additional paint near the radar sensors. These conditions may reduce the ability of the radar to detect other vehicles.**
- **Excessive noise (for example, audio system volume, open vehicle window) will interfere with the chime sound, and it may not be heard.**

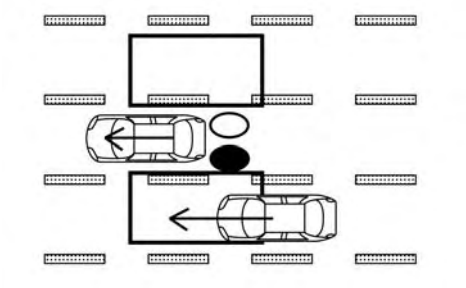

Illustration 1 – Approaching from behind

BSW DRIVING SITUATIONS

Indicator on	●
Indicator off	○
Indicator flashing	◉

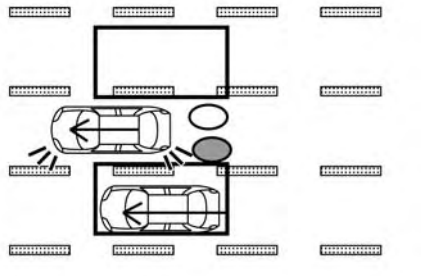

Illustration 2 – Approaching from behind

Another vehicle approaching from behind

Illustration 1: The side indicator light illuminates if a vehicle enters the detection zone from behind in an adjacent lane.

Illustration 2: If the driver activates the turn signal when another vehicle is in the detection zone, then the system chimes (twice) and the side indicator light flashes.

NOTE:

- **The radar sensors may not detect vehicles which are approaching rapidly from behind.**
- **If the driver activates the turn signal before a vehicle enters the detection zone, the side indicator light will flash but no chime will sound when the other vehicle is detected.**

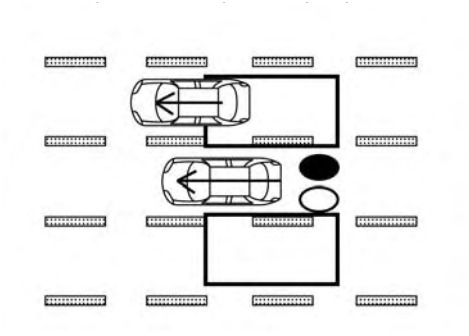

Illustration 3 – Overtaking another vehicle

Illustration 3: The side indicator light illuminates if you overtake a vehicle and that vehicle stays in the detection zone for approximately 2 seconds.

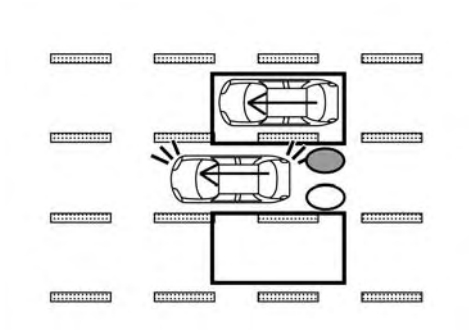

Illustration 4 – Overtaking another vehicle

Illustration 4: If the driver activates the turn signal while another vehicle is in the detection zone, then the system chimes (twice) and the side indicator light flashes.

NOTE:

- **When overtaking several vehicles in a row, the vehicles after the first vehicle may not be detected if they are traveling close together.**
- **The radar sensors may not detect slower moving vehicles if they are passed quickly.**
- **If the driver activates the turn signal before a vehicle enters the detection zone, the side indicator light will flash but no chime will sound when the other vehicle is detected.**

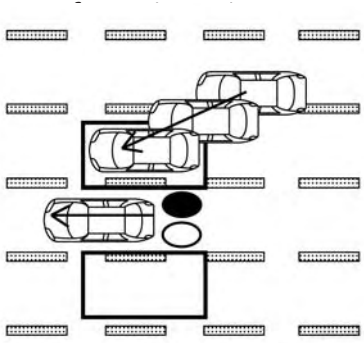

Illustration 5 – Entering from the side

Illustration 5: The side indicator light illuminates if a vehicle enters the detection zone from either side.

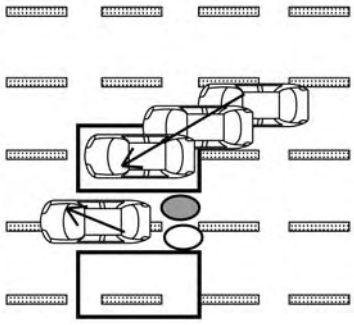

Illustration 6 – Entering from the side

Illustration 6: If the driver activates the turn signal while another vehicle is in the detection zone, then the system chimes (twice) and the side indicator light flashes.

NOTE:

- **If the driver activates the turn signal before a vehicle enters the detection zone, the side indicator light will flash but no chime will sound when the other vehicle is detected.**
- **The radar sensors may not detect a vehicle which is traveling at about the same speed as your vehicle when it enters the detection zone.**

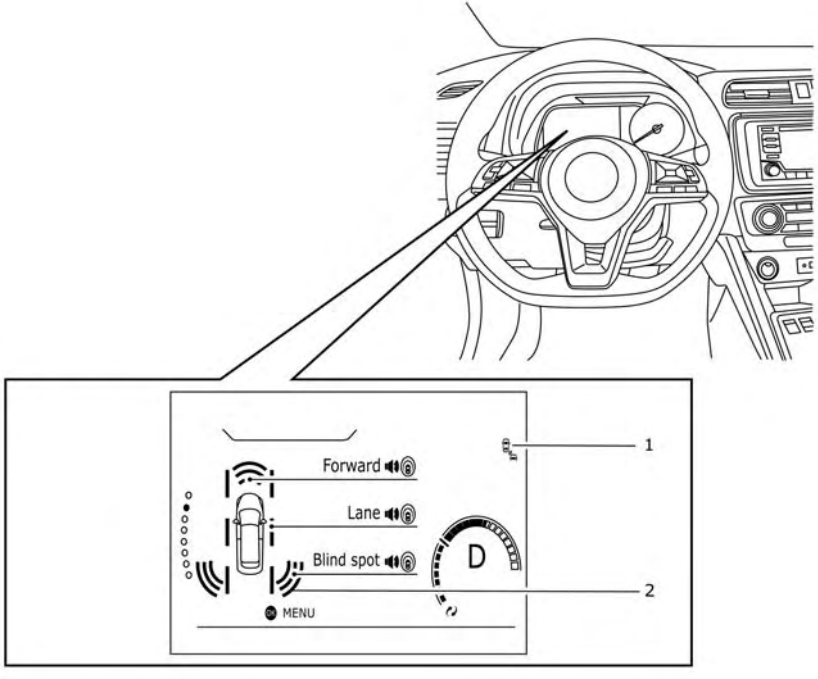

When radar blockage is detected, the system will be deactivated automatically. The BSW/RCTA indicator ① will blink (yellow) in the vehicle information display. The indicator next to "Blind spot" in the "Driving Aids" menu ② will also blink (yellow).

The system is not available until the conditions no longer exist.

The radar sensors may be blocked by temporary ambient conditions such as splashing water, mist or fog. The blocked condition may also be caused by objects such as ice, frost or dirt obstructing the radar sensors.

NOTE:
If the BSW system stops working, the RCTA system (if so equipped) will also stop working.

Action to take:

When the above conditions no longer exist, the system will resume automatically.

SYSTEM TEMPORARILY UNAVAILABLE

Malfunction

If the BSW system malfunctions, it will turn off automatically. The BSW/RCTA indicator will blink (yellow) in the vehicle information display. The indicator next to "Blind spot" in the "Driving Aids" menu will also blink (yellow).

NOTE:
If the BSW system stops working, the RCTA system (if so equipped) will also stop working.

Action to take:

Stop the vehicle in a safe location, place the vehicle in the P (Park) position, turn the EV system off and restart the EV system. If the indicators continue to appear, have the system checked. It is recommended that you visit a NISSAN certified LEAF dealer for this service.

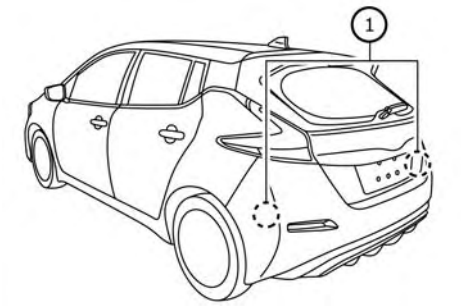

SYSTEM MAINTENANCE

The two radar sensors ① for the BSW and RCTA systems are located near the rear bumper. Always keep the area near the radar sensors clean.

The radar sensors may be blocked by temporary ambient conditions such as splashing water, mist or fog.

The blocked condition may also be caused by objects such as ice, frost or dirt obstructing the radar sensors.

Check for and remove objects obstructing the area around the radar sensors.

Do not attach stickers (including transparent material), install accessories or apply additional paint near the radar sensors.

Do not strike or damage the area around the radar sensors. It is recommended that you visit a NISSAN certified LEAF dealer if the area around the radar sensors is damaged due to a collision.

Radio frequency statement

For USA

FCC : OAYSRR3B

This device complies with part 15 of the FCC Rules. Operation is subject to the following two conditions:

(1) This device may not cause harmful interference, and (2) this device must accept any interference received, including interference that may cause undesired operation.

FCC Warning

Changes or modifications not expressly approved by the party responsible for compliance could void the user's authority to operate the equipment

For Canada

Applicable law: Canada 310

This device complies with Industry Canada licence-exempt RSS standard(s). Operation is subject to the following two conditions: (1) this device may not cause interference, and (2) this device must accept any interference, including interference that may cause undesired operation of the device.

Frequency bands: 24.05 – 24.25GHz

Output power: less than 20 milliwatts

REAR CROSS TRAFFIC ALERT (RCTA) (IF SO EQUIPPED)

WARNING

Failure to follow the warnings and instructions for proper use of the RCTA system could result in serious injury or death.

- **The RCTA system is not a replacement for proper driving procedures and is not designed to prevent contact with vehicles or objects. When backing out of a parking space, always use the side and rear mirrors and turn and look in the direction your vehicle will move. Never rely solely on the RCTA system.**

The RCTA system will assist you when backing out from a parking space. When the vehicle is in reverse, the system is designed to detect other vehicles approaching from the right or left of the vehicle. If the system detects cross traffic, it will alert you.

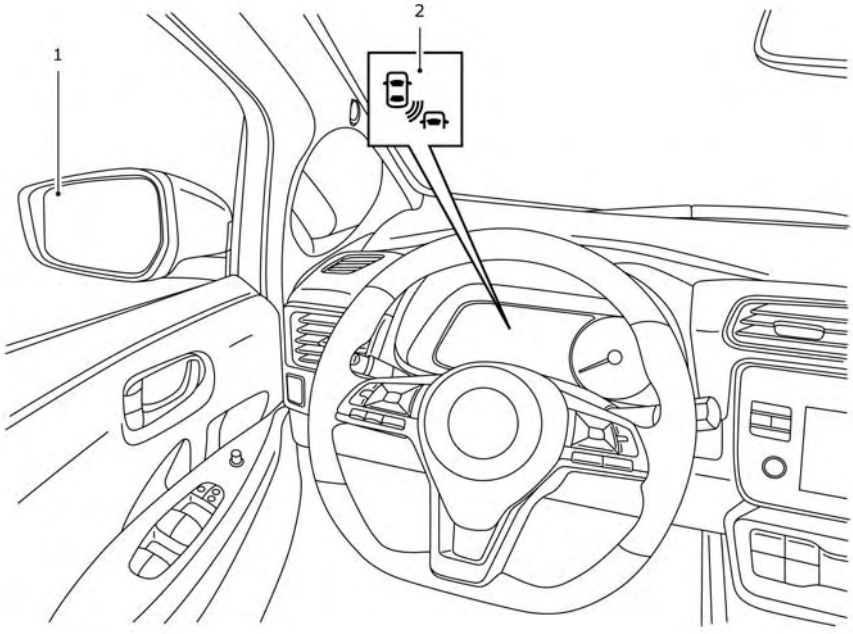

RCTA SYSTEM OPERATION

1. Side BSW/RCTA Indicator Light
2. BSW/RCTA Indicator

The RCTA system can help alert the driver of an approaching vehicle when the driver is backing out of a parking space.

When the shift position is in R (Reverse) and the vehicle speed is less than approximately 5 mph (8 km/h), the RCTA system is operational.

If the radar detects an approaching vehicle from either side, the system chimes (once) and the side BSW/RCTA indicator light (1) flashes on the side the vehicle is approaching from.

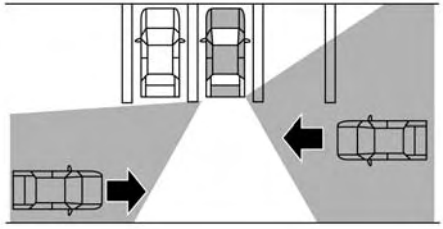

The RCTA system uses radar sensors ① installed on both sides near the rear bumper to detect an approaching vehicle.

The radar sensors ① can detect an approaching vehicle from up to approximately 66 ft (20 m) away.

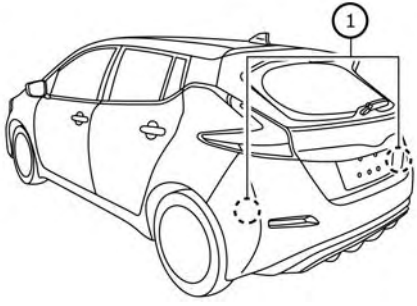

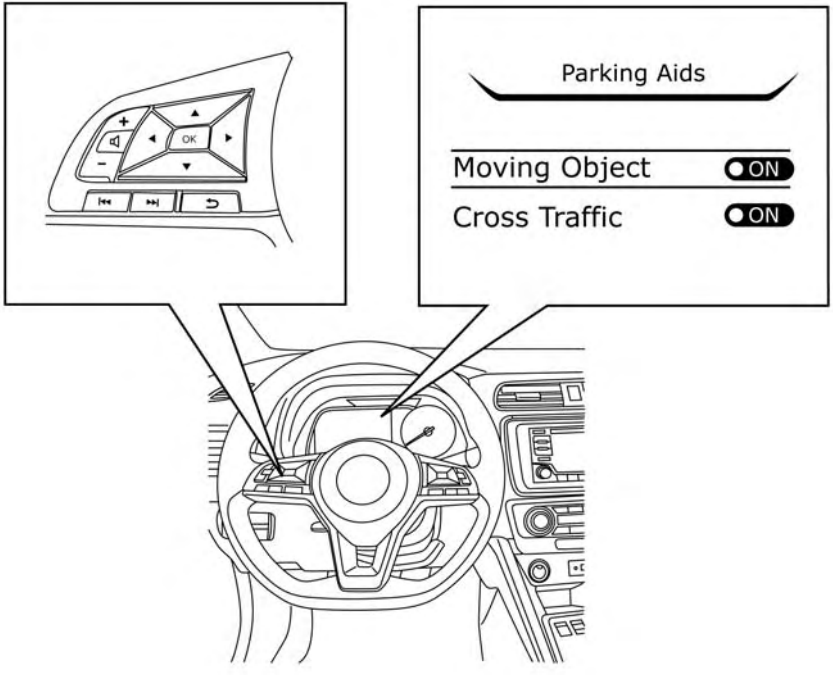

HOW TO ENABLE/DISABLE THE RCTA SYSTEM

Perform the following steps to enable or disable the RCTA system.

1. Press the ◀▶ button until "Settings" displays in the vehicle information display. Use the ▲▼ button to select "Driver Assistance." Then press the OK button.
2. Select "Parking Aids" and press the OK button.
3. Select "Cross Traffic" and use the OK button to turn the system on or off.

NOTE:
When enabling/disabling the system, the system setting will be retained even if the EV system is restarted.

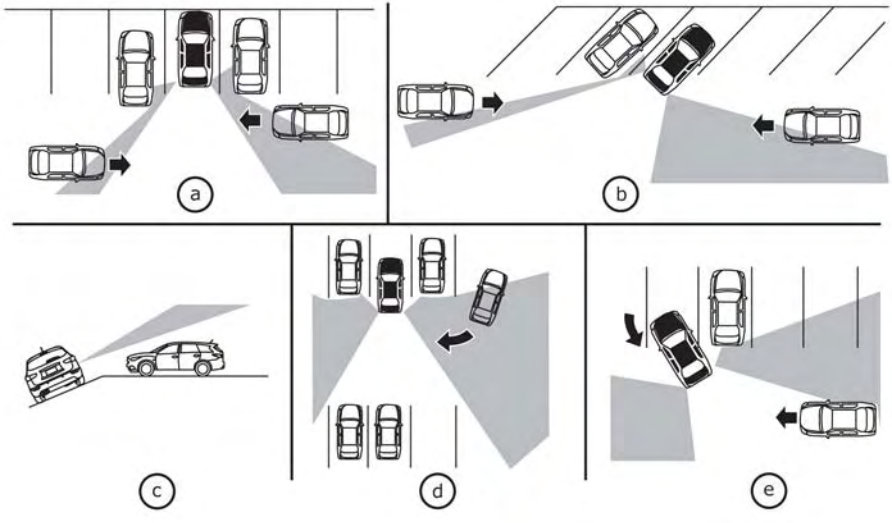

RCTA SYSTEM LIMITATIONS

WARNING

Listed below are the system limitations for the RCTA system. Failure to operate the vehicle in accordance with these system limitations could result in serious injury or death.

- **Always check surroundings and turn to check what is behind you before backing up. The radar sensors detect approaching (moving) vehicles. The radar sensors cannot detect every object such as:**
  - **Pedestrians, bicycles, motorcycles, animals or child-operated toy vehicles**
  - **A vehicle that is passing at speeds greater than approximately 19 mph (30 km/h)**
  - **A vehicle that is passing at speeds lower than approximately 5 mph (8 km/h)**
- **The radar sensors may not detect approaching vehicles in certain situations:**
  - **Illustration a: When a vehicle parked next to you obstructs the beam of the radar sensor.**

- Illustration b: When the vehicle is parked in an angled parking space.
- Illustration c: When the vehicle is parked on inclined ground.
- Illustration d: When an approaching vehicle turns into your vehicle's parking lot aisle.
- Illustration e: When the angle formed by your vehicle and approaching vehicle is small.

- The following conditions may reduce the ability of the radar to detect other vehicles:
  - Severe weather
  - Road spray
  - Ice/frost/dirt/snow build-up on the vehicle
- Do not attach stickers (including transparent material), install accessories or apply additional paint near the radar sensors. These conditions may reduce the ability of the radar to detect other vehicles.
- Excessive noise (e.g., audio system volume, open vehicle window) will interfere with the chime sound, and it may not be heard.

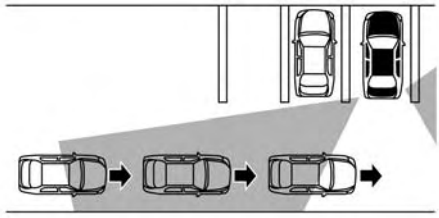

Illustration 1

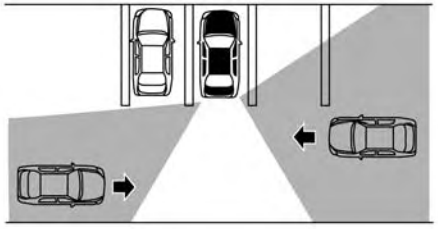

Illustration 2

NOTE:
In the case of several vehicles approaching in a row (Illustration 1) or in the opposite direction (Illustration 2), a chime may not be sounded by the RCTA system after the first vehicle passes the sensors.

SYSTEM TEMPORARILY UNAVAILABLE

When radar blockage is detected, the system will be deactivated automatically.

The systems are not available until the conditions no longer exist.

The radar sensors may be blocked by temporary ambient conditions such as splashing water, mist or fog.

The blocked condition may also be caused by objects such as ice, frost or dirt obstructing the radar sensors.

NOTE:
If the BSW system stops working, the RCTA system (if so equipped) will also stop working.

Action to take

When the above conditions no longer exist, the system will resume automatically.

Malfunction

When the RCTA system malfunctions, it will turn off automatically.

NOTE:
If the BSW system stops working, the RCTA system (if so equipped) will also stop working.

Action to take

Stop the vehicle in a safe location, place the vehicle in the P (Park) position, turn the EV system off and restart the EV system. If the system does not resume automatically, have the system checked. It is recommended that you visit a NISSAN certified LEAF dealer for this service.

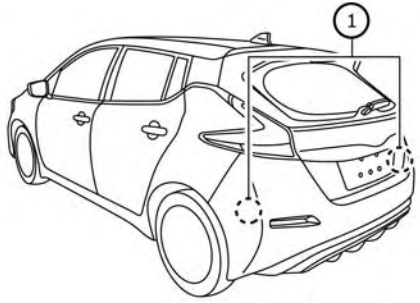

SYSTEM MAINTENANCE

The two radar sensors ① for the BSW and RCTA systems are located near the rear bumper. Always keep the area near the radar sensors clean.

The radar sensors may be blocked by temporary ambient conditions such as splashing water, mist or fog.

The blocked condition may also be caused by objects such as ice, frost or dirt obstructing the radar sensors.

Check for and remove objects obstructing the area around the radar sensors.

Do not attach stickers (including transparent material), install accessories or apply additional paint near the radar sensors.

Do not strike or damage the area around the radar sensors. It is recommended that you visit a NISSAN certified LEAF dealer if the area around the radar sensors is damaged due to a collision.

Radio frequency statement

For USA

FCC : OAYSRR3B

This device complies with part 15 of the FCC Rules. Operation is subject to the following two conditions:

(1) This device may not cause harmful interference, and (2) this device must accept any interference received, including interference that may cause undesired operation.

FCC Warning

Changes or modifications not expressly approved by the party responsible for compliance could void the user's authority to operate the equipment

For Canada

Applicable law: Canada 310

This device complies with Industry Canada licence-exempt RSS standard(s). Operation is subject to the following two conditions: (1) this device may not cause interference, and (2) this device must accept any interference, including interference that may cause undesired operation of the device.

Frequency bands: 24.05 – 24.25GHz

Output power: less than 20 milliwatts

CRUISE CONTROL (IF SO EQUIPPED)

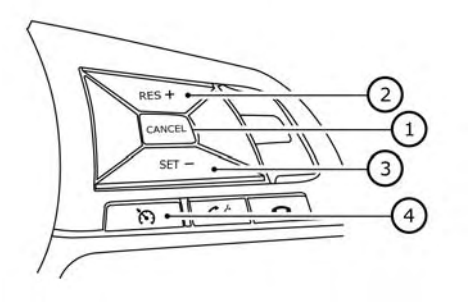

1. CANCEL switch
2. RES+ switch
3. SET- switch
4. Cruise control switch

PRECAUTIONS ON CRUISE CONTROL

- If the cruise control system malfunctions, it cancels automatically. The cruise indicator in the vehicle information display then blinks to warn the driver.
- If the cruise indicator blinks, turn the cruise control switch off and have the system checked. It is recommended that you visit a NISSAN certified LEAF dealer for this service.
- The cruise indicator may blink when the cruise control switch is turned on while pushing the RES+, SET- or CANCEL switch. To properly set the cruise control system, use the following procedures.

WARNING

Do not use the cruise control when driving under the following conditions:
- **When it is not possible to keep the vehicle at a set speed**
- **In heavy traffic or in traffic that varies in speed**
- **On winding or hilly roads**
- **On slippery roads (rain, snow, ice, etc.)**
- **In very windy areas**

Doing so could cause a loss of vehicle control and result in an accident.

CRUISE CONTROL OPERATIONS

The cruise control allows driving at a speed between 25 to 90 mph (40 to 144 km/h) without keeping your foot on the accelerator pedal.

To turn on the cruise control, push the cruise control switch on. The cruise indicator in the vehicle information display will illuminate.

To set the cruising speed, accelerate the vehicle to the preferred speed, push the SET- switch and release it. Take your foot off the accelerator pedal. The vehicle will maintain the set speed.

- **To pass another vehicle,** depress the accelerator pedal. When you release the pedal, the vehicle will return to the previously set speed.
- The vehicle may not maintain the set speed on winding or hilly roads. If this happens, drive without using the cruise control.

To cancel the preset speed, use one of the following methods:

1. Push the CANCEL switch.
2. Tap the brake pedal.

3. Turn the cruise control switch off. The cruise indicator in the vehicle information display will turn off.

- If you depress the brake pedal while pushing the RES+ or SET- switch and reset at the cruising speed, the cruise control will disengage. Turn the cruise control switch off once and then turn it on again.
- The cruise control will automatically cancel if the vehicle slows more than 8 mph (13 km/h) below the set speed.
- If you move the shift lever to the N (Neutral) position, the cruise control will be canceled.

To reset at a faster cruising speed, use one of the following methods:

- Depress the accelerator pedal. When the vehicle attains the preferred speed, push and release the SET- switch.
- Push and hold the RES+ switch. When the vehicle attains the preferred speed, release the switch.
- Push, then quickly release the RES+ switch. Each time you do this, the set speed will increase by about 1 mph or 1.6 km/h.

To reset at a slower cruising speed, use one of the following methods:

- Lightly tap the brake pedal. When the vehicle attains the preferred speed, push the SET- switch and release it.
- Push and hold the SET- switch. Release the switch when the vehicle slows down to the preferred speed.
- Push, then quickly release, the SET- switch. Each time you do this, the set speed will decrease by about 1 mph or 1km/h.

To resume the preset speed, push and release the RES+ switch. The vehicle will resume the last set cruising speed when the vehicle speed is over 25 mph (40 km/h).

INTELLIGENT CRUISE CONTROL (ICC) (FOR VEHICLES WITHOUT PROPILOT™ ASSIST) (IF SO EQUIPPED)

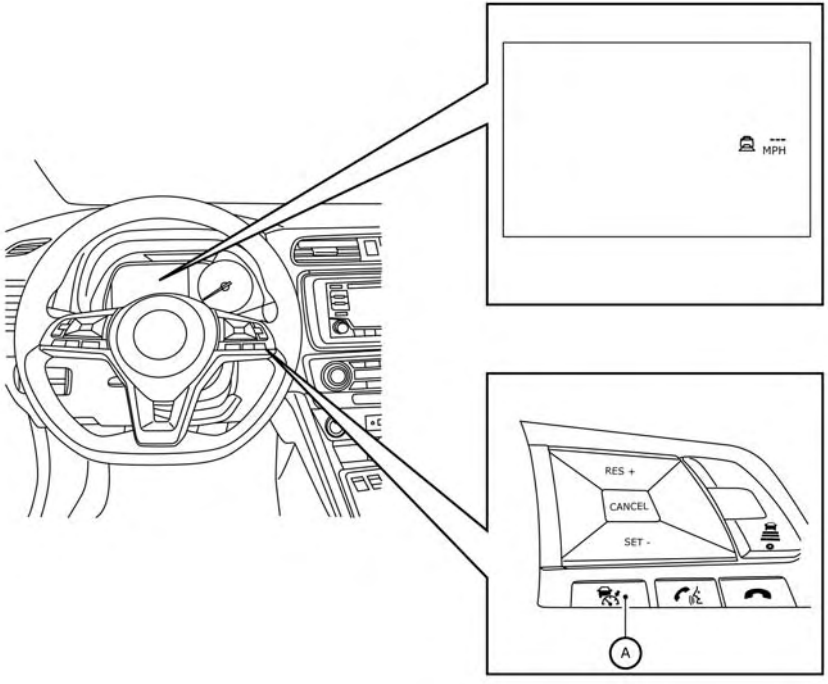

WARNING

Failure to follow the warnings and instructions for proper use of the ICC system could result in serious injury or death.

- **The ICC system is only an aid to assist the driver and is not a collision warning or avoidance device. It is the driver's responsibility to stay alert, drive safely, and be in control of the vehicle at all times.**
- **Always observe posted speed limits and do not set the speed over them.**
- **Always drive carefully and attentively when using the ICC system. Read and understand the Owner's Manual thoroughly before using the ICC system. To avoid serious injury or death, do not rely on the system to prevent accidents or to control the vehicle's speed in emergency situations. Do not use the ICC system except in appropriate road and traffic conditions.**

- **In the conventional (fixed speed) cruise control mode, a warning chime will not sound to warn you if you are too close to the vehicle ahead. Pay special attention to the distance between your vehicle and the vehicle ahead of you or a collision could occur**

The ICC system maintains a selected distance from the vehicle in front of you within the speed range of 0 to 90 mph (0 to 144 km/h) up to the set speed. The set speed can be selected by the driver between 20 to 90 mph (32 to 144 km/h).

The vehicle travels at a set speed when the road ahead is clear.

The ICC system can be set to one of two cruise control modes:

- **Vehicle-to-vehicle distance control mode:** For maintaining a selected distance between your vehicle and the vehicle in front of you up to the present speed
- **Conventional (fixed speed) cruise control mode:** For cruising at a preset speed

Push the ICC switch Ⓐ to choose the cruise control mode between the vehicle-to-vehicle distance control mode and the conventional (fixed speed) cruise control mode.

Once a control mode is activated, it cannot be changed to the other cruise control mode. To change the mode, push the ICC switch Ⓐ once to turn the system off. Then push the ICC switch Ⓐ again to turn the system back on and select the desired cruise control mode.

Always confirm the setting in the ICC system display.

For the vehicle-to-vehicle distance control mode, refer to "Vehicle-to-vehicle distance control mode" in this section.

For the conventional (fixed speed) cruise control mode, refer to "Conventional (fixed speed) cruise control mode" in this section.

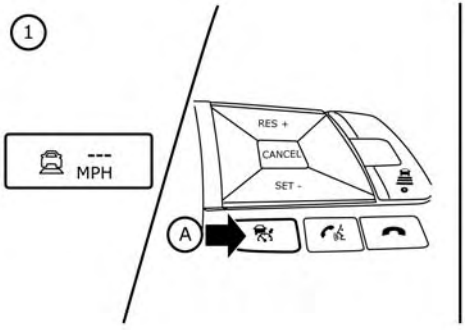

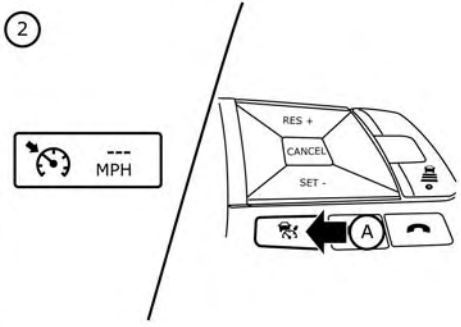

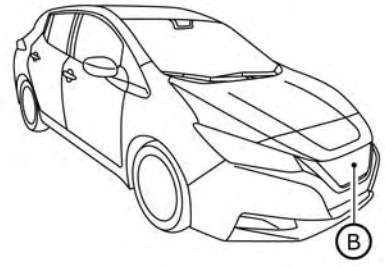

HOW TO SELECT THE CRUISE CONTROL MODE

Selecting the vehicle-to-vehicle distance control mode: To choose the vehicle-to-vehicle distance control mode ①, quickly push and release the ICC switch Ⓐ.

Selecting the conventional (fixed speed) cruise control mode: To choose the conventional (fixed speed) cruise control mode ②, push and hold the ICC switch Ⓐ for longer than approximately 1.5 seconds. For additional information, refer to "Conventional (fixed speed) cruise control mode" in this section.

VEHICLE-TO-VEHICLE DISTANCE CONTROL MODE

In the vehicle-to-vehicle distance control mode, the ICC system automatically maintains a selected distance from the vehicle traveling in front of you according to that vehicle's speed (up to the set speed), or at the set speed when the road ahead is clear.

The ICC system is intended to enhance the operation of the vehicle when following a vehicle traveling in the same lane and direction.

If the radar sensor Ⓑ detects a slower moving vehicle ahead, the system will reduce the vehicle speed so that your vehicle follows the vehicle in front at the selected distance.

The system automatically controls the throttle and applies the brakes (up to approximately 40% of vehicle braking power) if necessary.

The detection range of the sensor is approximately 650 ft (200 m) ahead.

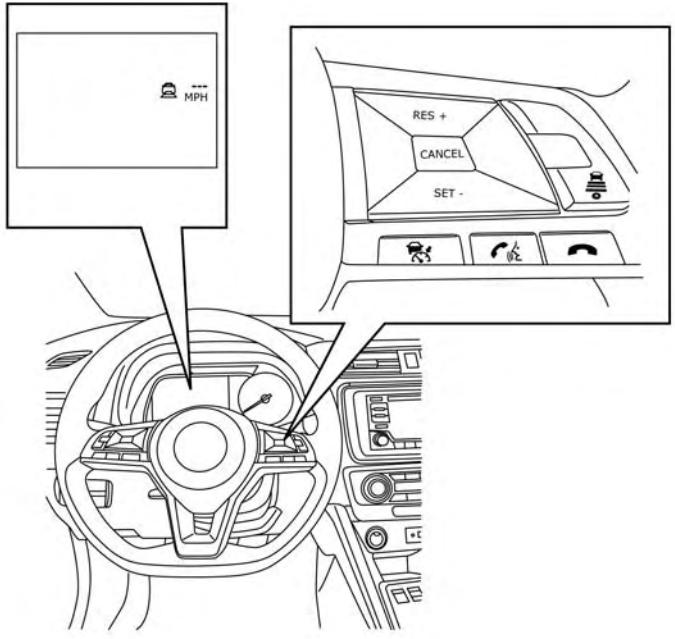

VEHICLE-TO-VEHICLE DISTANCE CONTROL MODE OPERATION

The vehicle-to-vehicle distance control mode is designed to maintain a selected distance from the vehicle in front of you and can reduce the speed to match a

slower vehicle ahead. The system will decelerate the vehicle as necessary and if the vehicle ahead comes to a stop, the vehicle decelerates to a standstill. However, the ICC system can only apply up to 40% of the vehicle's total braking power.

This system should only be used when traffic conditions allow vehicle speeds to remain fairly constant or when vehicle speeds change gradually. If a vehicle moves into the traveling lane ahead or if a vehicle traveling ahead rapidly decelerates, the distance between vehicles may become closer because the ICC system cannot decelerate the vehicle quickly enough. If this occurs, the ICC system will sound a warning chime and blink the system display to notify the driver to take necessary action.

The system will cancel and a warning chime will sound if the speed is below approximately 15 mph (24 km/h) and a vehicle is not detected ahead. The system will also disengage when the vehicle goes above the maximum set speed.

For additional information, refer to "Approach warning" in this section.

The following items are controlled in the vehicle-to-vehicle distance control mode:

- When there are no vehicles traveling ahead, the vehicle-to-vehicle distance control mode maintains the speed set by the driver. The set speed range is between approximately 20 and 90 mph (32 and 144 km/h).
- When there is a vehicle traveling ahead, the vehicle-to-vehicle distance control mode adjusts the speed to maintain the distance, selected by the driver, from the vehicle ahead. If the vehicle ahead comes to a stop, the vehicle decelerates to a standstill within the limitations of the system. The system will cancel once it judges a standstill with a warning chime.
- When the vehicle traveling ahead has moved out from its lane of travel, the vehicle-to-vehicle distance control mode accelerates and maintains vehicle speed up to the set speed.

The ICC system does not control vehicle speed or warn you when you approach stationary and slow moving vehicles. You must pay attention to vehicle operation to maintain proper distance from vehicles

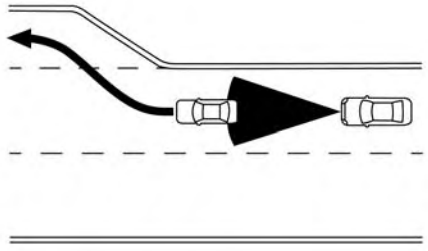

ahead when approaching toll gates or traffic congestion.

When driving on the freeway at a set speed and approaching a slower traveling vehicle ahead, the ICC system will adjust the speed to maintain the distance, selected by the driver, from the vehicle ahead. If the vehicle ahead changes lanes or exits the freeway, the ICC system will accelerate and maintain the speed up to the set speed. Pay attention to the driving operation to maintain control of the vehicle as it accelerates to the set speed.

The vehicle may not maintain the set speed on winding or hilly roads. If this occurs, you will have to manually control the vehicle speed.

Normally when controlling the distance to a vehicle ahead, this system automatically accelerates or decelerates your vehicle according to the speed of the vehicle ahead. Depress the accelerator to properly accelerate your vehicle when acceleration is required for a lane change. Depress the brake pedal when deceleration is required to maintain a safe distance to the vehicle ahead due to its sudden braking or if a vehicle cuts in. Always stay alert when using the ICC system.

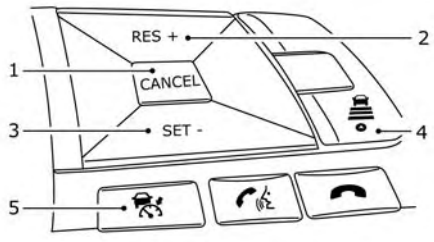

VEHICLE-TO-VEHICLE DISTANCE CONTROL MODE SWITCHES

The system is operated by the ICC switch and four control switches, all mounted on the steering wheel.

1. **CANCEL switch:**

   Deactivates the system without erasing the set speed.

2. **RES+ switch:**

   Resumes set speed or increases speed incrementally.

3. **SET- switch:**

   Sets desired cruise speed or reduces speed incrementally.

4. **DISTANCE switch:**

   Changes the vehicle's following distance:

   - Long
   - Middle
   - Short

5. **ICC switch:**

   Master switch to activate the system.

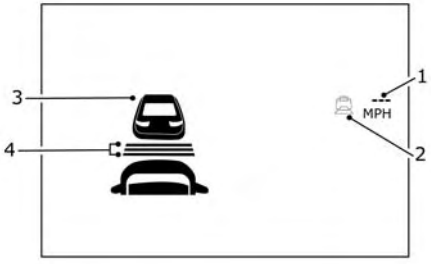

Vehicle-to-vehicle distance control mode display and indicators

The display is shown in the vehicle information display.

1. Set vehicle speed indicator:

   Indicates the set vehicle speed.

   For Canadian models, the speed is displayed in km/h.

2. This indicator indicators the ICC system status depending on a color:
   - **ICC system ON indicator (gray):** Indicates that the ICC switch is on.
   - **ICC system SET indicator (green):** Indicates that the cruising speed is set.
   - **ICC system warning (yellow):** Indicates that there is a malfunction in the ICC system.
3. Vehicle ahead detection indicator:

   Indicates whether it detects a vehicle in front of you.
4. Set distance indicator:

   Displays the selected distance between vehicles set with the distance switch.

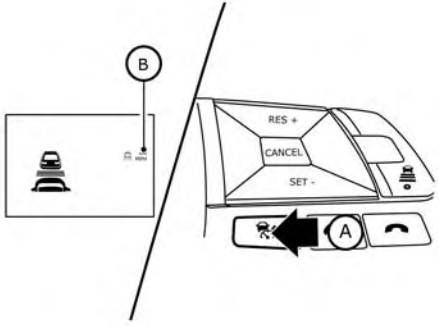

Operating vehicle-to-vehicle distance control mode

To turn on the cruise control, quickly push and release the ICC switch Ⓐ. The ICC system ON indicator (gray), set distance indicator and set vehicle speed indicator Ⓑ come on in a standby state for setting.

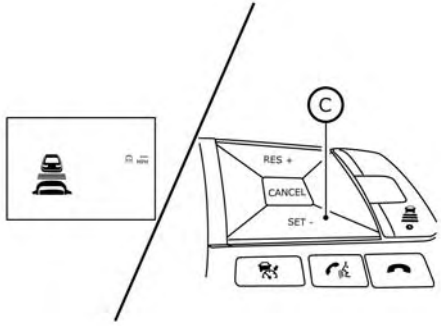

To set cruising speed, accelerate your vehicle to the desired speed, push the SET– switch Ⓒ and release it. The ICC system set indicator (green), vehicle ahead detection indicator, set distance indicator and set vehicle speed indicator Ⓑ will come on. Take your foot off the accelerator pedal. Your vehicle will maintain the set speed.

When the SET– switch is pushed under the following conditions, the system cannot be set and the ICC indicators will blink for approximately 2 seconds:

- When traveling below 20 mph (32 km/h) and a vehicle ahead is not detected
- When the shift lever is not in D (Drive) or B mode
- When the parking brake is applied
- When the brakes are operated by the driver

When the SET– switch is pushed under the following conditions, the system cannot be set.

A warning chime will sound and a message will pop up:

- When the VDC system is off (To use the ICC system, turn on the VDC system. Push the ICC switch to turn off the ICC system and reset the ICC switch by pushing the ICC switch again.)

  For additional information about the VDC system, refer to "Vehicle Dynamic Control (VDC) system" in this section.
- When ABS or VDC is operating
- When a wheel is slipping (To use the ICC system, make sure the wheels are no longer slipping.)

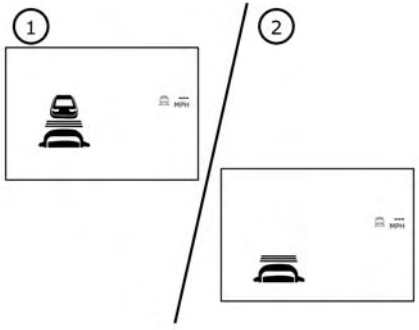

1. System set display with vehicle ahead
2. System set display without vehicle ahead

The driver sets the desired vehicle speed based on the road conditions. The ICC system maintains the set vehicle speed, similar to standard cruise control, as long as no vehicle is detected in the lane ahead. The ICC system displays the set speed.

Vehicle detected ahead

When a vehicle is detected in the lane ahead, the ICC system decelerates the vehicle by controlling the throttle and applying the brakes to match the speed of a slower vehicle ahead. The system then controls the vehicle speed based on the speed of the vehicle ahead to maintain the driver selected distance.

NOTE:

- **The stoplights of the vehicle come on when braking is performed by the ICC system.**
- **When the brake operates, a noise may be heard. This is not a malfunction.**

When a vehicle ahead is detected, the vehicle ahead detection indicator comes on. The ICC system will also display the set speed and selected distance.

Vehicle ahead not detected

When a vehicle is no longer detected ahead, the ICC system gradually accelerates your vehicle to resume the previously set vehicle speed. The ICC system then maintains the set speed.

When a vehicle is no longer detected, the vehicle ahead detection indicator turns off.

If a vehicle ahead appears during acceleration to the set vehicle speed or any time the ICC system is in operation, the system controls the distance to that vehicle.

When a vehicle is no longer detected under approximately 15 mph (24 km/h), the system will be canceled.

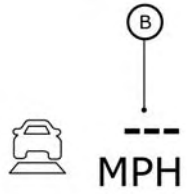

When passing another vehicle, the set speed indicator Ⓑ will flash when the vehicle speed exceeds the set speed. The vehicle detect indicator will turn off when the area ahead of the vehicle is open. When the pedal is released, the vehicle will return to the previously set speed.

Even though your vehicle speed is set in the ICC system, you can depress the accelerator pedal when it is necessary to accelerate your vehicle rapidly.

How to change the set vehicle speed

To cancel the preset speed, use one of the following methods:

- Push the CANCEL switch. The set vehicle speed indicator will go out.
- Tap the brake pedal. The set vehicle speed indicator will go out.
- Turn the ICC switch off. The ICC indicators will go out.

To reset at a faster cruising speed, use one of the following methods:

- Depress the accelerator pedal. When the vehicle attains the desired speed, push and release the SET– switch.
- Push and hold the RES+ switch. The set vehicle speed will increase by approximately 5 mph (5 km/h).
- Push, then quickly release the RES+ switch. Each time you do this, the set speed will increase by approximately 1 mph (1 km/h).

To reset at a slower cruising speed, use one of the following methods:

- Lightly tap the brake pedal. When the vehicle attains the desired speed, push the SET– switch and release it.
- Push and hold the SET– switch. The set vehicle speed will decrease by approximately 5 mph (5 km/h).
- Push, then quickly release the SET– switch. Each time you do this, the set speed will decrease by approximately 1 mph (1 km/h).

To resume the preset speed, push and release the RES+ switch. The vehicle will resume the last set cruising speed when the vehicle speed is over 20 mph (32 km/h).

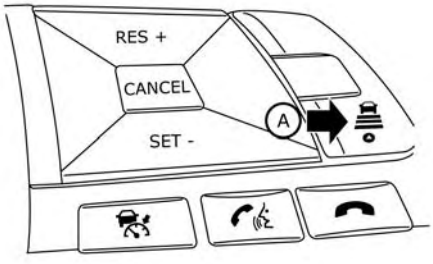

How to change the set distance to the vehicle ahead

The distance to the vehicle ahead can be selected at any time depending on the traffic conditions.

Each time the DISTANCE switch Ⓐ is pushed, the set distance will change to long, middle, short and back to long again, in that sequence.

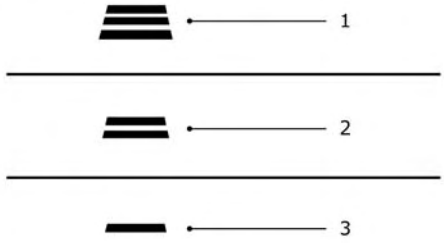

	Distance	Approximate distance at 60 mph (100 km/h) [ft (m)]
1.	Long	200 (60)
2.	Middle	150 (45)
3.	Short	90 (30)

- The distance to the vehicle ahead will change according to the vehicle speed. The higher the vehicle speed, the longer the distance.
- If the EV system is stopped, the set distance becomes "long." (Each time the EV system is started, the initial setting becomes "long.")

Approach warning

If your vehicle comes closer to the vehicle ahead due to rapid deceleration of that vehicle or if another vehicle cuts in, the system warns the driver with the chime and ICC system display. Decelerate by depressing the brake pedal to maintain a safe vehicle distance if:

- The chime sounds.
- The vehicle ahead detection indicator blinks.

The warning chime may not sound in some cases when there is a short distance between vehicles. Some examples are:

- When the vehicles are traveling at the same speed and the distance between vehicles is not changing.
- When the vehicle ahead is traveling faster and the distance between vehicles is increasing.
- When a vehicle cuts in near your vehicle.

The warning chime will not sound when:

- The vehicle approaches other vehicles that are parked or moving slowly.
- The accelerator pedal is depressed, overriding the system.

NOTE:

The approach warning chime may sound and the system display may blink when the ICC sensor detects objects on the side of the vehicle or on the side of the road. This may cause the ICC system to decelerate or accelerate the vehicle. The ICC sensor may detect these objects when the vehicle is driven on winding roads, narrow roads, hilly roads, or when entering or exiting a curve. In these cases you will have to manually control the proper distance ahead of your vehicle.

Also, the sensor sensitivity can be affected by vehicle operation (steering maneuver or driving position in the lane) or traffic or vehicle condition (for example, if a vehicle is being driven with some damage).

Automatic cancellation

A chime sounds under the following conditions and the control is automatically canceled:

- When the vehicle ahead is not detected and your vehicle is traveling below the speed of 15 mph (24 km/h)
- When the system judges the vehicle is at a standstill
- When the shift lever is not in the D (Drive) position or B mode
- When the parking brake system is applied
- When the VDC system is turned off
- When ABS or VDC operates
- When distance measurement becomes impaired due to adhesion of dirt or obstruction to the sensor
- When a wheel slips
- When the radar signal is temporarily interrupted

VEHICLE-TO-VEHICLE DISTANCE CONTROL MODE LIMITATIONS

WARNING

Listed below are the system limitations for the ICC system. Failure to operate the vehicle in accordance with these system limitations could result in serious injury or death.

- **The ICC system is primarily intended for use on straight, dry, open roads with light traffic. It is not advisable to use the ICC system in city traffic or congested areas.**
- **The ICC system will not adapt automatically to road conditions. This system should be used in evenly flowing traffic. Do not use the system on roads with sharp curves, or on icy roads, in heavy rain or in fog.**
- **As there is a performance limit to the distance control function, never rely solely on the ICC system. This system does not correct careless, inattentive or absentminded driving, or overcome poor visibility in rain, fog, or other bad weather. Decelerate the vehicle speed by depressing the**

brake pedal, depending on the distance to the vehicle ahead and the surrounding circumstances in order to maintain a safe distance between vehicles.

- **If the vehicle ahead comes to a stop, the vehicle decelerates to a standstill within the limitations of the system. The system will cancel once it judges that the vehicle has come to a standstill and sound a warning chime. To prevent the vehicle from moving, the driver must depress the brake pedal.**
- **Always pay attention to the operation of the vehicle and be ready to manually control the proper following distance. The ICC system may not be able to maintain the selected distance between vehicles (following distance) or selected vehicle speed under some circumstances.**
- **The system may not detect the vehicle in front of you in certain road or weather conditions. To avoid accidents, never use the ICC system under the following conditions:**
  - **On roads where the traffic is heavy or there are sharp curves**
  - **On slippery road surfaces such as on ice or snow, etc.**
  - **During bad weather (rain, fog, snow, etc.)**
  - **When rain, snow or dirt adhere to the bumper around the distance sensor**
  - **On steep downhill roads (the vehicle may go beyond the set vehicle speed and frequent braking may result in overheating the brakes)**
  - **On repeated uphill and downhill roads**
  - **When traffic conditions make it difficult to keep a proper distance between vehicles because of frequent acceleration or deceleration**
  - **Interference by other radar sources.**
- **Do not use the ICC system if you are towing a trailer. The system may not detect a vehicle ahead.**
- **In some road or traffic conditions, a vehicle or object can unexpectedly come into the sensor detection zone and cause automatic braking. Always stay alert and avoid using the ICC system where not recommended in this warning section.**

The radar sensor will not detect the following objects:

- Stationary and slow moving vehicles
- Pedestrians or objects in the roadway
- Oncoming vehicles in the same lane
- Motorcycles traveling offset in the travel lane

The sensor generally detects the signals returned from the vehicle ahead. Therefore, if the sensor cannot detect the reflection from the vehicle ahead, the ICC system may not maintain the selected distance.

The following are some conditions in which the sensor cannot properly detect a vehicle ahead and the system may not operate properly:

- When snow or road spray from traveling vehicles reduces the sensor's detection.
- When your vehicle is towing a trailer, etc.
- When excessively heavy baggage is loaded in the rear seat or the liftgate of your vehicle.

The ICC system is designed to automatically check the sensor's operation within the limitations of the system.

When the sensor is covered with dirt or is obstructed, the system will automatically be canceled. If the sensor is covered with ice, a transparent or translucent vinyl bag, etc., the ICC system may not detect them. In these instances, the vehicle-to-vehicle distance control mode may not cancel and may not be able to maintain the selected following distance from the vehicle ahead. Be sure to check and clean the sensor regularly.

The detection zone of the radar sensor is limited. A vehicle ahead must be in the detection zone for the vehicle-to-vehicle distance detection mode to maintain the selected distance from the vehicle ahead.

A vehicle ahead may move outside of the detection zone due to its position within the same lane of travel. Motorcycles may not be detected in the same lane ahead if they are traveling offset from the center line of the lane. A vehicle that is entering the lane ahead may not be detected until the vehicle has completely moved into the lane.

If this occurs, the ICC system may warn you by blinking the system indicator and sounding the chime. The driver may have to manually control the proper distance away from the vehicle traveling ahead.

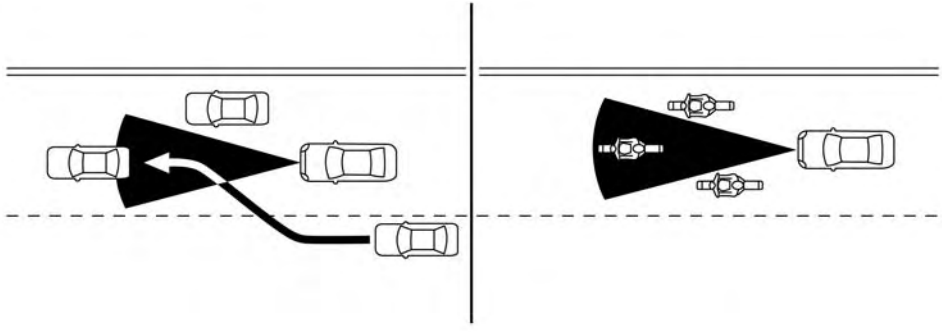

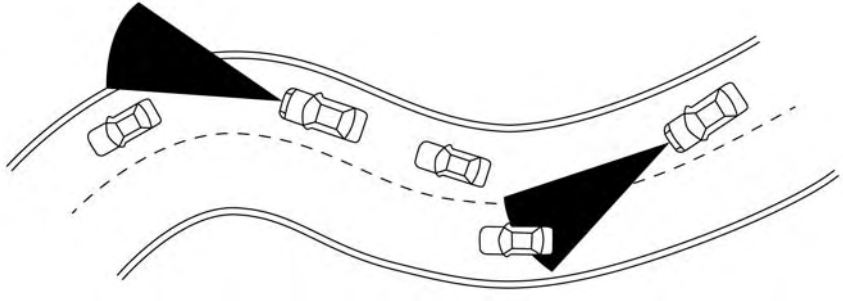

When driving on some roads, such as winding, hilly, curved, narrow roads, or roads which are under construction, the ICC sensor may detect vehicles in a different lane, or may temporarily not detect a vehicle traveling ahead. This may cause the ICC system to decelerate or accelerate the vehicle.

The detection of vehicles may also be affected by vehicle operation (steering maneuver or traveling position in the lane, etc.) or vehicle condition.

If this occurs, the ICC system may warn you by blinking the system indicator and sounding the chime unexpectedly. You will have to manually control the proper distance away from the vehicle traveling ahead.

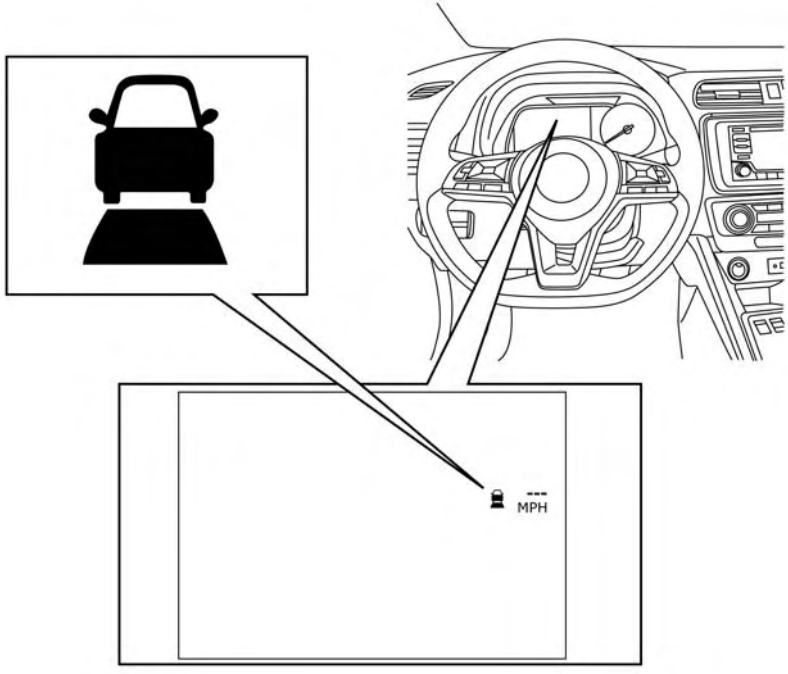

SYSTEM TEMPORARILY UNAVAILABLE

The following are conditions in which the ICC system may be temporarily unavailable. In these instances, the ICC system may cancel and may not be able to maintain the selected following distance from the vehicle ahead.

Condition A

Under the following conditions, the ICC system is automatically canceled. A chime will sound and the system will not be able to be set:

- When the VDC system is turned off
- When ABS or VDC is operating
- When a vehicle ahead is not detected and your vehicle is traveling below the speed of 15 mph (24 km/h)
- When the system judges the vehicle is at a standstill
- When the shift lever is not in D (Drive) or B mode
- When the parking brake is applied
- When a wheel slips
- When the radar signal is temporarily interrupted

Action to take

When the conditions listed above are no longer present, turn the system off using the ICC switch. Turn the ICC system back on to use the system.

Condition B

When the radar sensor area of the front bumper is covered with dirt or is obstructed, the ICC system will automatically be canceled.

The chime will sound and the "Not Available: Front Radar Blocked" warning message will appear in the vehicle information display.

When driving on roads with limited road structures or bridges (for example, long bridges, deserts, snowfields, driving next to long walls), the system may illuminate the system warning light (orange) and display the "Not Available: Front Radar Blocked" message.

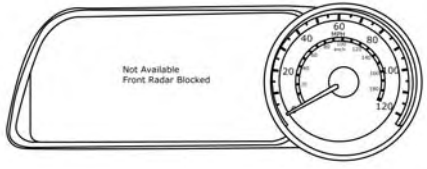

Action to take

If the warning message appears, stop the vehicle in a safe place, place the shift lever in the P (Park) position, and turn the EV system off. When the radar signal is temporarily interrupted, clean the sensor area of the front bumper and restart the EV system. If the "Not Available: Front Radar Blocked" warning message continues to be displayed, have the system checked. It is recommended that you visit a NISSAN certified LEAF dealer for this service.

Condition C

When the ICC system is not operating properly, a chime sounds and the ICC system warning light (orange) will come on.

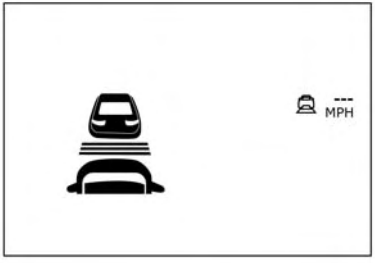

Action to take

If the warning light comes on, park the vehicle in a safe place. Turn the EV system off, restart the EV system, resume driving and set the ICC system again.

If it is not possible to set the system or the indicator stays on, it may indicate that the system is malfunctioning. Although the vehicle is still drivable under normal conditions, have the vehicle checked. It is recommended that you visit a NISSAN certified LEAF dealer for this service.

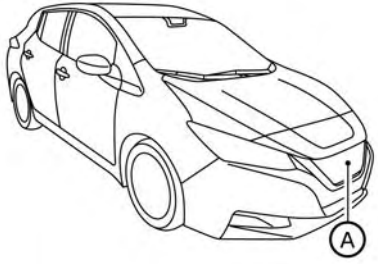

SYSTEM MAINTENANCE

The sensor for the ICC system Ⓐ is located on the front of the vehicle.

To keep the ICC system operating properly, be sure to observe the following:

- Always keep the sensor area clean.
- Do not strike or damage the areas around the sensor.
- Do not attach a sticker (including transparent material) or install an accessory near the sensor. This could cause failure or malfunction.
- Do not attach metallic objects near the sensor area (brush guard, etc.). This could cause failure or malfunction.
- Do not alter, remove, or paint the front bumper. Before customizing or restoring the front bumper, it is recommended that you visit a NISSAN certified LEAF dealer.

Radio frequency statement

For USA

FCC ID OAYARS4B

This device complies with Part 15 of the FCC Rules. Operation is subject to the following two conditions:

1. This device may not cause harmful interference, and
2. This device must accept any interference received, including interference that may cause undesired operation.

FCC Warning

Changes or modifications not expressly approved by the party responsible for compliance could void the user's authority to operate the equipment.

For Canada

Model: ARS4-B

IC: 4135A-ARS4B

FCC ID: OAYARS4B

This device complies with Part 15 of the FCC Rules and with Industry Canada licence-exempt RSS standard(s). Operation is subject to the following two conditions:

1. This device may not cause interference,
2. This device must accept any interference, including interference that may cause undesired operation of the device.

Le présent appareil est conforme aux CNR d'Industrie Canada applicables aux appareils radio exempts de licence. L'exploitation est autorisée aux deux conditions suivantes:

1. L'appareil ne doit pas produire de brouillage, et
2. L'utilisateur de l'appareil doit accepter tout brouillage radio électrique subi, même si le brouillage est susceptible d'en compromettre le fonctionnement.

Radio Frequency Radiation Exposure Information:

This equipment complies with FCC radiation exposure limits set forth for an uncontrolled environment.

This equipment should be installed and operated with minimum distance of 30 cm between the radiator and your body.

The transmitter must not be co-located or operating in conjunction with any other antenna or transmitter.

Cet équipement est conforme aux limites d'exposition aux rayonnements IC établies pour un environnement non contrôlé. Cet équipement doit être installé et utilisé avec un minimum de 30 cm de distance entre la source de rayonnement et votre corps.

FCC Notice

Changes or modifications not expressly approved by the party responsible for compliance could void the user's authority to operate the equipment.

CONVENTIONAL (FIXED SPEED) CRUISE CONTROL MODE

This mode allows driving at a speed between 25 to 90 mph (40 to 144 km/h) without keeping your foot on the accelerator pedal.

WARNING

- **In the conventional (fixed speed) cruise control mode, a warning chime does not sound to warn you if you are too close to the vehicle ahead, as neither the presence of the vehicle ahead nor the vehicle-to-vehicle distance is detected.**
- **Pay special attention to the distance between your vehicle and the vehicle ahead of you or a collision could occur.**
- **Always confirm the setting in the ICC system display.**
- **Do not use the conventional (fixed speed) cruise control mode when driving under the following conditions:**
  - **When it is not possible to keep the vehicle at a set speed**
  - **In heavy traffic or in traffic that varies in speed**

- **On winding or hilly roads**
- **On slippery roads (rain, snow, ice, etc.)**
- **In very windy areas**

▪ **Doing so could cause a loss of vehicle control and result in an accident.**

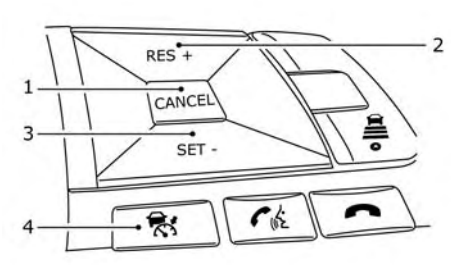

Conventional (fixed speed) cruise control switches

1. **CANCEL switch:**

   Deactivates the system without erasing the set speed.

2. **RES+ switch:**

   Resumes set speed or increases speed incrementally.

3. **SET- switch:**

   Sets desired cruise speed or reduces speed incrementally.

4. **ICC switch:**

   Master switch to activate the system.

Conventional (fixed speed) cruise control mode display and indicators

The display is located in the vehicle information display.

1. **Cruise indicator:** This indicator indicates the ICC system status depending on a color:
   - **Cruise control ON indicator (gray):** Indicates that the ICC switch is on.
   - **Cruise control SET indicator (green):** Indicates that the cruising speed is set.
   - **Cruise control warning (yellow):** Indicates that there is a malfunction in the ICC system.
2. **Set vehicle speed indicator:** This indicator indicates the set vehicle speed. For Canadian models, the speed is displayed in km/h.

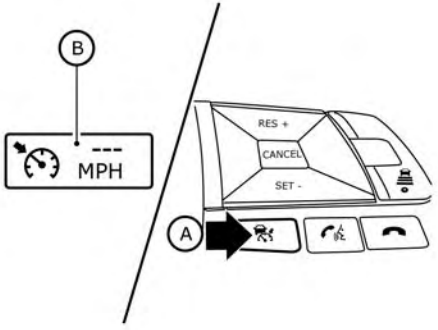

Operating conventional (fixed speed) cruise control mode

To turn on the conventional (fixed speed) cruise control mode, push and hold the ICC switch Ⓐ for longer than about 1.5 seconds.

When pushing ICC switch on, the conventional (fixed speed) cruise control mode display and indicators Ⓑ are displayed in the vehicle information display. After you hold the ICC switch for longer than about 1.5 seconds, the ICC system display turns off. The cruise indicator appears. You can

now set your desired cruising speed. Pushing the ICC switch again will turn the system completely off. When the power switch is placed in the OFF position, the system is also automatically turned off.

To use the ICC system again, quickly push and release the ICC switch (vehicle-to vehicle distance control mode) or push and hold it (conventional cruise control mode) again to turn it on.

CAUTION

To avoid accidentally engaging cruise control, make sure to turn the ICC switch off when not using the ICC system.

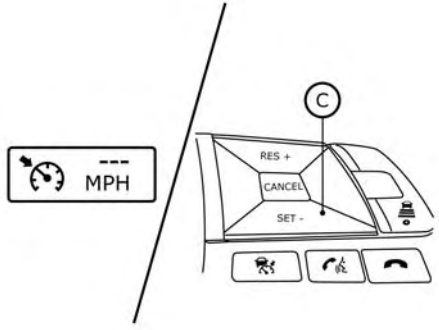

To set cruising speed, accelerate your vehicle to the desired speed, push the SET- Ⓒ switch and release it. (The color of the cruise indicator changes to green and set vehicle speed indicator comes on.) Take your foot off the accelerator pedal. Your vehicle will maintain the set speed.

- To pass another vehicle, depress the accelerator pedal. When you release the pedal, the vehicle will return to the previously set speed.
- The vehicle may not maintain the set speed when going up or down steep hills. If this happens, manually maintain vehicle speed.

To cancel the preset speed, use any of the following methods:

1. Push the CANCEL switch. The vehicle speed indicator will turn off.
2. Tap the brake pedal. The vehicle speed indicator will turn off.
3. Turn the ICC switch off. Both the cruise indicator and vehicle speed indicator will turn off.

To reset at a faster cruising speed, use one of the following three methods:

1. Depress the accelerator pedal. When the vehicle attains the desired speed, push and release the SET- switch.
2. Push and hold the RES+ switch. When the vehicle attains the desired speed, release the switch.
3. Push, then quickly release the RES+ switch. Each time you do this, the set speed will increase by about 1 mph (1.6 km/h).

To reset at a slower cruising speed, use one of the following three methods:

1. Lightly tap the brake pedal. When the vehicle attains the desired speed, push the SET- switch and release it.
2. Push and hold the SET- switch. Release the switch when the vehicle slows down to the desired speed.
3. Push, then quickly release the SET- switch. Each time you do this, the set speed will decrease by about 1 mph (1.6 km/h).

To resume the preset speed, push and release the RES+ switch. The vehicle will resume the last set cruising speed when the vehicle speed is over 25 mph (40 km/h).

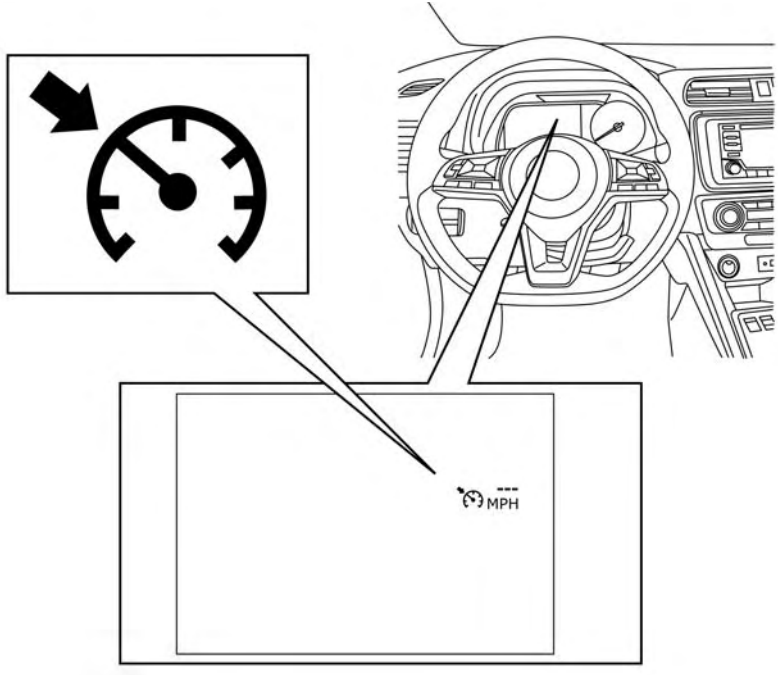

System temporarily unavailable

A chime sounds under the following conditions and the control is automatically canceled:

- When the vehicle slows down more than 8 mph (13 km/h) below the set speed

- When the shift lever is not in the D (Drive) or B mode
- When the parking brake is applied
- When the VDC operates (including the traction control system)
- When a wheel slips

When the system is not operating properly, the chime sounds and the color of the cruise indicator will change to orange.

Action to take

If the color of the cruise indicator changes to orange, stop the vehicle in a safe place and place the shift lever in the P (Park) position. Turn the EV system off, restart the EV system, resume driving, and then perform the setting again.

If it is not possible to set or the indicator stays on, it may indicate that the system is malfunctioning. Although the vehicle is still drivable under normal conditions, have the vehicle checked. It is recommended that you visit a NISSAN certified LEAF dealer for this service.

PROPILOT™ ASSIST (IF SO EQUIPPED)

WARNING

Failure to follow the warnings and instructions for proper use of the ProPILOT Assist system could result in serious injury or death.

- **ProPILOT Assist is not a self-driving system. Within the limits of its capabilities, as described in this manual, it helps the driver with certain driving activities.**
- **The ProPILOT Assist system is not a replacement for proper driving procedures and is not designed to correct careless, inattentive or absent-minded driving. ProPILOT Assist will not always steer the vehicle to keep it in the lane. The ProPILOT Assist system is not designed to prevent loss of control. It is the driver's responsibility to stay alert, drive safely, keep the vehicle in the traveling lane, and be in control of the vehicle at all times.**
- **There are limitations to the ProPILOT Assist system capability. The ProPILOT Assist system does not function in all driving, traffic, weather, and road conditions. It is the driver's responsibility to stay alert, drive safely, keep the vehicle in the traveling lane, and be in control of the vehicle at all times.**
- **The ProPILOT Assist system is only an aid to assist the driver and is not a collision warning or avoidance device.**
- **The ProPILOT Assist system is for highway use only and is not intended for city driving. Failure to apply the brake or steer the vehicle when necessary may result in a serious accident.**
- **Always observe posted speed limits and do not set the speed over them.**
- **Never take your hands off the steering wheel when driving. Always keep your hands on the steering wheel and drive your vehicle safely.**
- **Never unfasten your safety belt when using ProPILOT Assist. Doing so automatically cancels the ProPILOT Assist system.**

- **The ProPILOT Assist system does not react to stationary and slow moving vehicles.**
- **Always drive carefully and attentively when using the ProPILOT Assist system. Read and understand the Owner's Manual thoroughly before using the ProPILOT Assist system. To avoid serious injury or death, do not rely on the system to prevent accidents or to control the vehicle's speed in emergency situations. Do not use the ProPILOT Assist system except in appropriate road and traffic conditions.**

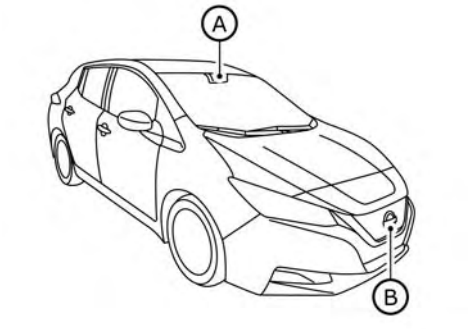

The ProPILOT Assist system is intended to enhance the operation of the vehicle when following a vehicle traveling in the same lane and direction.

The ProPILOT Assist system uses a multi-sensing front camera unit Ⓐ installed behind the windshield and a radar sensor located on the front of the vehicle Ⓑ to measure the distance to the vehicle ahead in the same lane and to monitor the lane markers. If the vehicle detects a slower moving vehicle ahead, the system will reduce the vehicle speed so that your vehicle follows the vehicle in front at the selected distance. The system will also help keep the vehicle centered in the traveling lane when clear lane markings are detected.

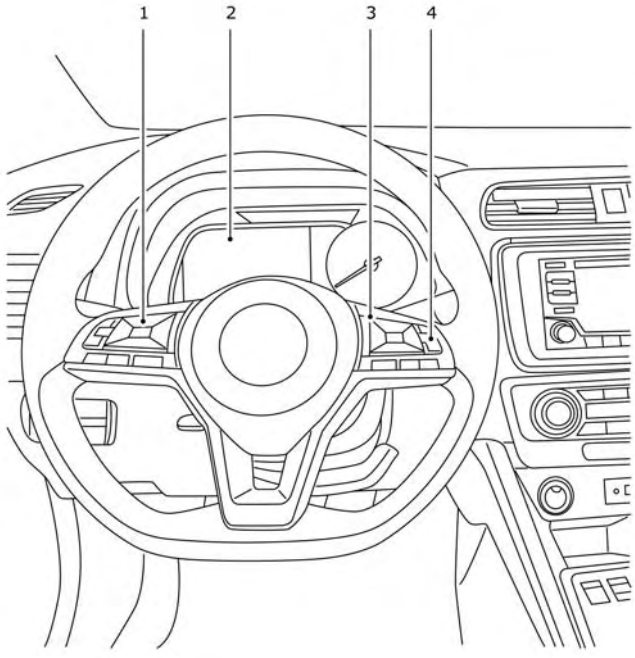

PROPILOT™ ASSIST SYSTEM OPERATION

1. Steering-wheel-mounted control (left)
2. Vehicle information display
3. Steering-wheel-mounted control (right)
4. ProPILOT Assist switch

The ProPILOT Assist system has the following two functions:

1. **Intelligent Cruise Control (ICC)**

   The ICC system can be set to one of two cruise control modes:

   - **Conventional (fixed speed) cruise control mode:** For cruising at a preset speed

NOTE:
Steering Assist is not available in the conventional (fixed speed) cruise control mode.

   - **Vehicle-to-vehicle distance control mode:** The ICC system maintains a selected distance from the vehicle in front of you within the speed range of 0 to 90 mph (0 to 144 km/h) up to the set speed. The set speed can be selected by the driver between 20 to 90 mph (32 to 144 km/h). When the vehicle ahead slows to a stop, your vehicle gradually

decelerates to a standstill. When the vehicle is stopped, the ICC system maintains braking force to keep your vehicle stopped.

NOTE:
When your vehicle is stopped for less than 3 seconds and the vehicle ahead begins to move, your vehicle will start moving again automatically.

- When the vehicle ahead begins to move forward, push the RES+ switch on the steering-wheel-mounted control or lightly depress the accelerator pedal to release the brake. The ICC system will restart to maintain a selected distance from the vehicle in front of you.
- When no vehicle is detected ahead within the driver selected distance, the vehicle travels at the speed set by the driver. The speed must be above 20 mph (32 km/h) to use this function.

NOTE:
Even if the Automatic Emergency Braking (AEB) setting is turned off by the driver using the "Settings" menu in the vehicle information display, AEB will be automatically turned on when ICC is used.

2. **Steering Assist**

   The Steering Assist function controls the steering system to help keep your vehicle within the traveling lane.

   When there is no vehicle ahead, Steering Assist is not available at speeds under 37 mph (60 km/h).

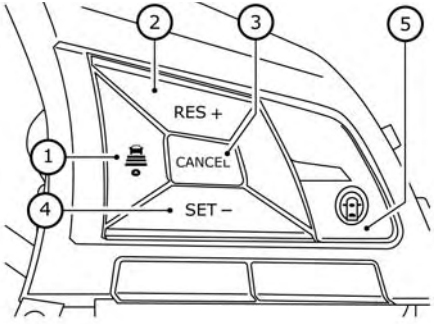

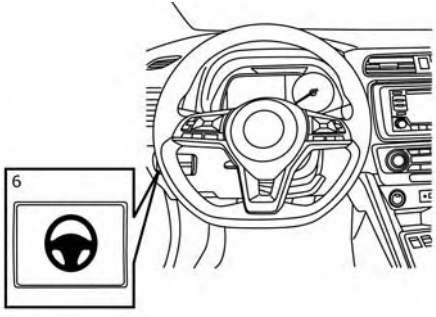

ProPILOT™ Assist switches

1. **DISTANCE switch:**
   - Long
   - Middle
   - Short
2. **RES+ switch:**

   Resumes set speed or increases speed incrementally
3. **CANCEL switch:**

   Deactivates the ProPILOT Assist system
4. **SET- switch:**

   Sets desired cruise speed or reduces speed incrementally
5. **ProPILOT Assist switch:**

   Turns the ProPILOT Assist system on or off
6. **Steering Assist switch:**

   Turns the Steering Assist function on or off

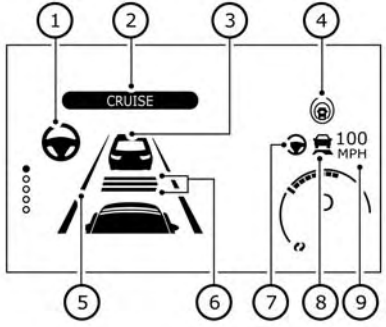

The ProPILOT™ Assist system display and indicators

1. **Steering Assist indicator**

   Indicates the status of the Steering Assist function by the color of the indicator
   - Steering Assist indicator (gray): Steering Assist standby
   - Steering Assist indicator (green): Steering Assist active
   - Steering Assist indicator (orange): Steering Assist malfunction

2. **ProPILOT Assist activation**

   Displays once the ProPILOT Assist system is activated

3. **Vehicle ahead detection indicator**

   Indicates whether the system detects a vehicle in front of you

4. **ProPILOT Assist status indicator**

   Indicates the status of the ProPILOT Assist system by the color of the indicator

   - ProPILOT Assist status indicator (white): ProPILOT Assist is on but in standby
   - ProPILOT Assist status indicator (blue): ProPILOT Assist active

5. **Lane marker indicator**

   Indicates whether the system detects lane markers

   - No lane markers displayed: Steering Assist is turned off
   - Lane marker indicator (gray): No lane markers detected
   - Lane marker indicator (green): Lane markers detected
   - Lane marker indicator (yellow): Lane departure is detected

6. **Set distance indicator**

   Displays the selected distance

7. **Steering Assist status indicator/warning**

   Displays the status of the Steering Assist by the color of the indicator/warning

   - No Steering Assist status indicator displayed: Steering Assist is turned off
   - Steering Assist indicator (gray): Steering Assist standby
   - Steering Assist indicator (green): Steering Assist active
   - Steering Assist indicator (yellow): Steering Assist malfunction

8. **Speed control status indicator/warning**

   Displays the status of speed control by the color and shape of the indicator/warning

   - Speed control status indicator/warning (gray): ICC standby
   - Speed control status indicator/warning (solid green): ICC (distance control mode) is active (vehicle detected ahead). Your vehicle matches the speed of the vehicle ahead.
   - Speed control status indicator/warning (green outline): ICC (maintain speed control mode) is active (no vehicle detected ahead). Your vehicle maintains the driver-selected set speed.
   - Speed control status indicator/warning (orange): Indicates an ICC malfunction

9. **Set vehicle speed indicator**

   Indicates the set vehicle speed

TURNING THE CONVENTIONAL (FIXED SPEED) CRUISE CONTROL MODE ON

NOTE:
ProPILOT™ Assist provides no approach warnings, automatic braking, or steering assist in the conventional (fixed speed) cruise control mode.

To choose the conventional (fixed speed) cruise control mode, push and hold the ProPILOT Assist switch for longer than approximately 1.5 seconds. For additional information, refer to "Conventional (fixed speed) cruise control mode" in this section.

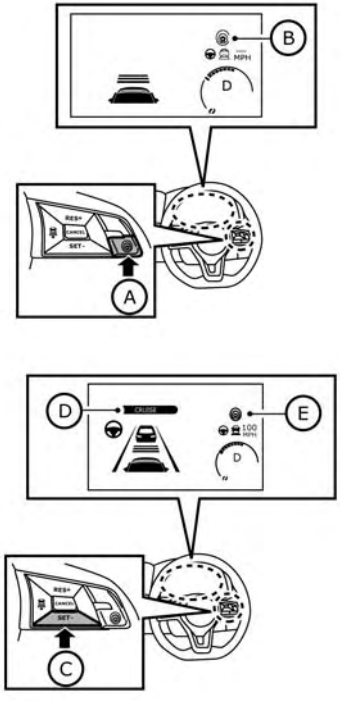

OPERATING PROPILOT™ ASSIST

1. Push the ProPILOT Assist switch Ⓐ. This turns on the ProPILOT Assist system and displays the status of the ProPILOT Assist system on the vehicle information display Ⓑ.
2. Accelerate or decelerate your vehicle to the desired speed.
3. Push the SET- switch Ⓒ. The ProPILOT Assist system begins to automatically maintain the set speed. The ProPILOT Assist activation indicator Ⓓ and ProPILOT Assist status indicator Ⓔ illuminate (blue). When a vehicle ahead is traveling at a speed of 20 mph (32 km/h) or below and the SET- switch is pushed, the set speed of your vehicle is 20 mph (32 km/h).

NOTE:
Turning the ProPILOT Assist system on will turn on the Intelligent Lane Intervention (I-LI) system at the same time. For additional information, refer to "Intelligent Lane Intervention (I-LI)" in this section.

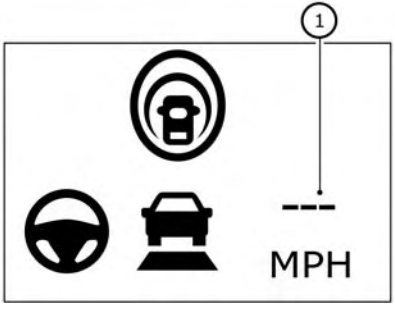

When the SET- switch is pushed under the following conditions, the ProPILOT Assist system cannot be set and the set vehicle speed indicator ① blinks for approximately 2 seconds:

- When traveling below 20 mph (32 km/h) and the vehicle ahead is not detected
- When the shift lever is not in the D (Drive) position or B mode
- When the parking brake is applied
- When the brakes are operated by the driver

- When the VDC system is off. For additional information, refer to "Vehicle Dynamic Control (VDC) system" in this section.
- When the VDC system (including the traction control system) is operating
- When a wheel is slipping
- When any door is open
- When the driver's seat belt is not fastened

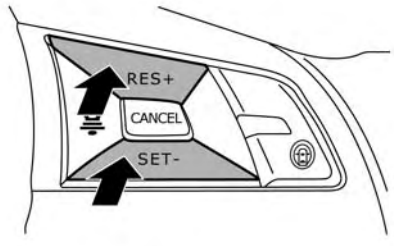

How to change the set vehicle speed

The set vehicle speed can be adjusted.

To change to a faster cruising speed:

- Push and hold the RES+ switch. The set vehicle speed increases by approximately 5 mph (5 km/h).
- Push, then quickly release, the RES+ switch. Each time you do this, the set speed increases by approximately 1 mph (1 km/h).

To change to a slower cruising speed:

- Push and hold the SET- switch. The set vehicle speed decreases by approximately 5 mph (5 km/h).
- Push, then quickly release, the SET- switch. Each time you do this, the set speed decreases by approximately 1 mph (1 km/h).

How to momentarily accelerate or decelerate

- Depress the accelerator pedal when acceleration is required. Release the accelerator pedal to resume the previously set vehicle speed.
- Depress the brake pedal when deceleration is required. Control by the ProPILOT™ Assist system is canceled. Push the RES+ switch to resume the previously set vehicle speed.

WARNING

When the accelerator pedal is depressed and you are approaching the vehicle ahead, the ICC system will neither control the brake nor warn the driver with the chime and display. The driver must manually control the vehicle speed to maintain a safe distance to the vehicle ahead. Failure to do so could result in severe personal injury or death.

NOTE:
When you accelerate by depressing the accelerator pedal or decelerate by pushing the SET- switch and the vehicle travels faster than the speed set by the driver, the set speed vehicle indicator will blink.

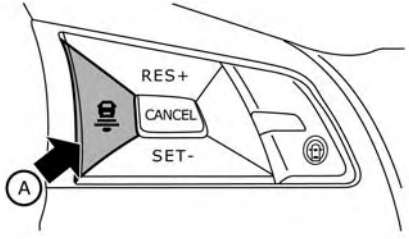

How to change the set distance to the vehicle ahead

The distance to the vehicle ahead can be selected at any time.

Each time the DISTANCE switch Ⓐ is pushed, the set distance will change to long, middle, short and back to long again in that sequence.

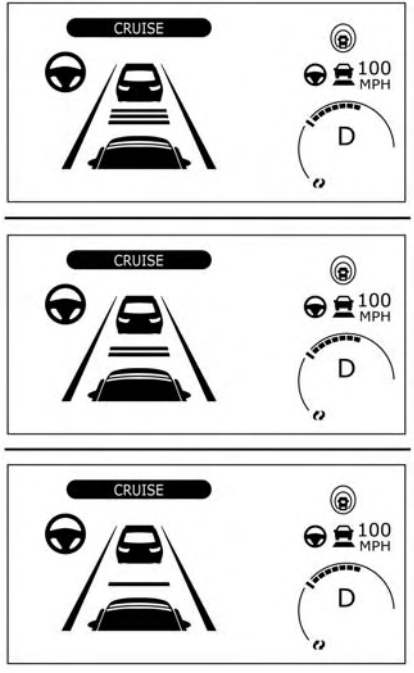

	Distance	Approximate distance at 60 mph (100 km/h) [ft (m)]
1.	Long	200 (60)
2.	Middle	150 (45)
3.	Short	90 (30)

- The distance to the vehicle ahead changes automatically according to the vehicle speed. The higher the vehicle speed, the longer the distance.
- If the EV system is stopped, the set distance becomes "long." (Each time the EV system is started, the initial setting becomes "long.")

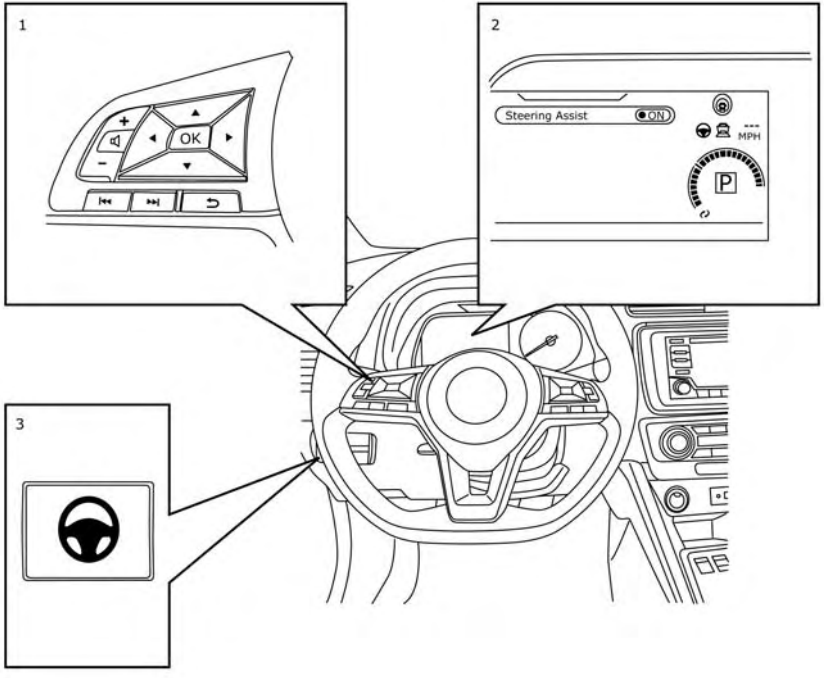

HOW TO ENABLE/DISABLE THE STEERING ASSIST

1. Steering-wheel mounted control (right)
2. Vehicle information display
3. Steering Assist switch

Use the following methods to enable or disable the Steering Assist.

Steering Assist switch:

To turn the Steering Assist on or off, push the Steering Assist switch ③ on the instrument panel.

NOTE:

- **When the Steering Assist switch is used to turn the system on or off, the system remembers the setting even if the power switch is cycled. The switch must be pushed again to change the setting to on or off.**
- **The Steering Assist switch changes the status of the "Steering Assist" selection made in the "Settings" screen in the vehicle information display.**

Setting in the vehicle information display:

1. Press the ◀▶ button on the steering wheel ① until "Settings" displays in the vehicle information display ② and then press the OK button ①.

2. Use the ▲▼ button ① to select "Driver Assistance." Then press the OK button ①.
3. Select "Steering Assist" and press the OK button ①.

NOTE:

- **When the Cruise screen is displayed on the vehicle information display, press the OK button on the steering wheel to call up the "Driver Assistance" setting display.**
- **When enabling/disabling the system through the vehicle information display or when pressing the Steering Assist switch, the system retains the current settings even if the EV system is restarted.**

How to cancel the ProPILOT™ Assist system

To cancel the ProPILOT Assist system, use one of the following methods:

- Push the CANCEL switch.
- Tap the brake pedal (except at a standstill).
- Push the ProPILOT Assist switch to turn the system off. The ProPILOT Assist status indicator will go out.

When the ProPILOT Assist system is canceled while the vehicle is stopped, the electronic parking brake is automatically activated.

WARNING

When you leave the vehicle, make sure to push the ProPILOT Assist switch to turn the system off, place the shift lever in the P (Park) position, and turn the EV system off.

INTELLIGENT CRUISE CONTROL (ICC) (FOR VEHICLES WITH PROPILOT™ ASSIST)

WARNING

Failure to follow the warnings and instructions for proper use of the ICC system could result in serious injury or death.

- **The ICC system is only an aid to assist the driver and is not a collision warning or avoidance device. It is for highway use only and it is not intended for congested areas or city driving. It is the driver's responsibility to stay alert, drive safely, and be in control of the vehicle at all times.**
- **There are limitations to the ICC system capability. The ICC system does not function in all driving, traffic, weather, and road conditions. It is the driver's responsibility to stay alert, drive safely, keep the vehicle in the traveling lane, and be in control of the vehicle at all times.**
- **Always observe posted speed limits and do not set the speed over them.**
- **The ICC system does not react to stationary and slow moving vehicles.**
- **Always drive carefully and attentively when using the ICC system. Read and understand the Owner's Manual thoroughly before using the ICC system. To avoid serious injury or death, do not rely on the system to prevent accidents or to control the**

vehicle's speed in emergency situations. Do not use the ICC system except in appropriate road and traffic conditions.

ICC system operation

The ICC system is designed to maintain a selected distance from the vehicle in front of you and can reduce the speed to match a slower vehicle ahead. The system decelerates the vehicle as necessary and if the vehicle ahead comes to a stop, the vehicle decelerates to a standstill. However, the ICC system can only apply up to 40% of the vehicle's total braking power. This system should only be used when traffic conditions allow vehicle speeds to remain fairly constant or when vehicle speeds change gradually. If a vehicle moves into the traveling lane ahead or if a vehicle traveling ahead rapidly decelerates, the distance between vehicles may become closer because the ICC system cannot decelerate the vehicle quickly enough. If this occurs, the ICC system sounds a warning chime and blinks the system display to notify the driver to take necessary action.

The ICC system cancels and a warning chime sounds if the speed is below approximately 15 mph (24 km/h) and a vehicle is not detected ahead.

The ICC system operates as follows:

- When there are no vehicles traveling ahead, the ICC system maintains the speed set by the driver. The set speed range is between approximately 20 and 90 mph (32 and 144 km/h).
- When there is a vehicle traveling ahead, the ICC system adjusts the speed to maintain the distance, selected by the driver, from the vehicle ahead. If the vehicle ahead comes to a stop, the vehicle decelerates to a standstill. Once your vehicle stops, the ICC system keeps the vehicle stopped.
- When your vehicle is at a standstill for more than 3 seconds and the vehicle ahead begins to accelerate, push the RES+ switch or lightly depress the accelerator pedal. The ICC system starts to follow the vehicle ahead.
- When the vehicle traveling ahead moves to a different traveling lane, the ICC system accelerates and maintains vehicle speed up to the set speed.

The ICC system does not control vehicle speed or warn you when you approach stationary and slow moving vehicles. You must pay attention to vehicle operation to maintain proper distance from vehicles ahead when approaching toll gates or traffic congestion.

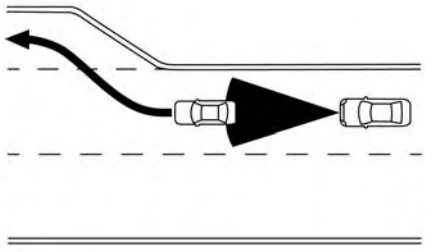

When driving on the freeway at a set speed and approaching a slower traveling vehicle ahead, the ICC system adjusts the speed to maintain the distance, selected by the driver, from the vehicle ahead. If the vehicle ahead changes lanes or exits the freeway, the ICC system accelerates and maintains the speed up to the set speed. Pay attention to the driving operation to maintain control of the vehicle as it accelerates to the set speed.

The vehicle may not maintain the set speed on winding or hilly roads. If this occurs, you will have to manually control the vehicle speed.

Normally when controlling the distance to a vehicle ahead, the system automatically accelerates or decelerates your vehicle according to the speed of the vehicle ahead.

Depress the accelerator to properly accelerate your vehicle when acceleration is required for a lane change. Depress the brake pedal when deceleration is required to maintain a safe distance to the vehicle ahead due to sudden braking or if a vehicle cuts in. Always stay alert when using the ICC system.

System set display with no vehicle detected ahead

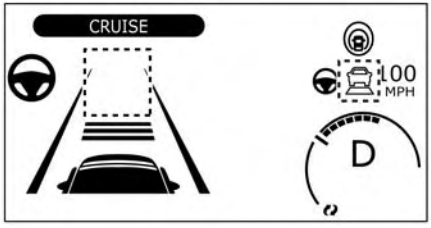

No vehicle detected ahead

The driver sets the desired vehicle speed based on the road conditions. The ICC system maintains the set vehicle speed, similar to standard cruise control, as long as no vehicle is detected in the lane ahead. The ICC system displays the set speed.

System set display with vehicle ahead

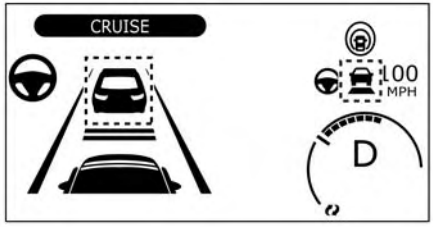

Vehicle detected ahead

When a vehicle is detected in the lane ahead, the ICC system decelerates the vehicle by controlling the throttle and applying the brakes to match the speed of a slower vehicle ahead. The ICC system then controls the vehicle speed based on the speed of the vehicle ahead to maintain the driver selected distance.

NOTE:

- **The stoplights of the vehicle come on when braking is performed by the ICC system.**
- **When the brake is applied by the system, a noise may be heard. This is not a malfunction.**

When the ICC system detects a vehicle ahead, the vehicle ahead detection indicator and the speed control status indicator (distance control mode) illuminates (solid green).

Vehicle ahead stops

When the vehicle ahead decelerates to stop, your vehicle decelerates to a standstill. Once your vehicle stops, the ICC system automatically applies the brakes to keep the vehicle stopped. When your vehicle is at a standstill, the "(RES+) Press to start" message is displayed on the vehicle information display.

NOTE:
When your vehicle stops for less than 3 seconds, your vehicle will automatically follow the vehicle as it accelerates from a stop.

Vehicle ahead accelerates

When your vehicle is stopped and the vehicle ahead begins to accelerate, push the RES+ switch or lightly depress the accelerator pedal. The ICC system starts to follow the vehicle ahead.

Vehicle ahead not detected

When a vehicle is no longer detected ahead, the ICC system gradually accelerates your vehicle to resume the previously set vehicle speed. The ICC system then maintains the set speed.

When a vehicle is no longer detected, the vehicle ahead detection indicator turns off and the speed control status indicator (maintain speed control mode) illuminates (green outline).

The ICC system gradually accelerates to the set speed, but you can depress the accelerator pedal to quickly accelerate. When a vehicle is no longer detected and your vehicle is traveling under approximately 15 mph (24 km/h), the ICC system automatically cancels.

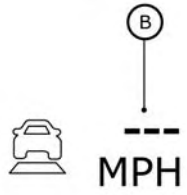

When passing another vehicle, the set speed indicator Ⓑ flashes when the vehicle speed exceeds the set speed. The vehicle ahead detection indicator turns off when the area ahead of the vehicle is open. When the pedal is released, the vehicle returns to the previously set speed. Even though your vehicle speed is set in the ICC system, you can depress the accelerator pedal when it is necessary to accelerate your vehicle rapidly.

Approach warning

If your vehicle comes closer to the vehicle ahead due to rapid deceleration of that vehicle or if another vehicle cuts in, the system warns the driver with the chime and ICC system display. Decelerate by depressing the brake pedal to maintain a safe vehicle distance if:

- The chime sounds.
- The vehicle ahead detection indicator and set distance indicator blink.
- You judge it necessary to maintain a safe distance.

The warning chime may not sound in some cases when there is a short distance between vehicles. Some examples are:

- When the vehicles are traveling at the same speed and the distance between vehicles is not changing.
- When the vehicle ahead is traveling faster and the distance between vehicles is increasing.
- When a vehicle cuts in near your vehicle.

The warning chime will not sound when:

- Your vehicle approaches other vehicles that are parked or moving slowly.
- The accelerator pedal is depressed, overriding the system.

NOTE:
The approach warning chime may sound and the system display may flash when the radar sensor detects objects on the side of the vehicle or on the side of the road. This may cause the ICC system to decelerate or accelerate the vehicle. The radar sensor may detect these objects when the vehicle is driven on winding, narrow, or hilly roads or when the vehicle is entering or exiting a curve. In these cases, you will have to manually control the proper distance ahead of your vehicle.
Also, the sensor sensitivity can be affected by vehicle operation (steering maneuver or driving position in the lane) or traffic or vehicle conditions (for example, if a vehicle is being driven with some damage).

ICC system limitations

WARNING

Listed below are the system limitations for the ICC system. Failure to operate the vehicle in accordance with these system limitations could result in serious injury or death:

- **The ICC system is primarily intended for use on straight, dry, open roads with light traffic. It is not advisable to use the ICC system in city traffic or congested areas.**
- **The ICC system will not adapt automatically to road conditions. This system should be used in evenly flowing traffic. Do not use the system on roads with sharp curves or on icy roads, in heavy rain or in fog.**
- **As there is a performance limit to the distance control function, never rely solely on the ICC system. This system does not correct careless, inattentive or absentminded driving or overcome poor visibility in rain, fog, or other bad weather. Decelerate the vehicle speed by depressing the brake pedal, depending on the distance to the vehicle ahead and the surrounding circumstances in order to maintain a safe distance between vehicles.**
- **When the ICC system automatically brings the car to a stop, your vehicle can automatically accelerate if the vehicle is stopped for less than approximately 3 seconds. Be prepared to stop your vehicle if necessary.**
- **Always pay attention to the operation of the vehicle and be ready to manually control the proper following distance. The ICC system may not be able to maintain the selected distance between vehicles (following distance) or selected vehicle speed under some circumstances.**
- **The system may not detect the vehicle in front of you in certain road or weather conditions. To avoid accidents, never use the ICC system under the following conditions:**
  - **On roads with heavy, high-speed traffic or sharp curves**
  - **On slippery road surfaces such as on ice or snow, etc.**
  - **During bad weather (rain, fog, snow, etc.)**
  - **When rain, snow or dirt adhere to the bumper around the distance sensor**
  - **On steep downhill roads (the vehicle may go beyond the set vehicle speed and frequent braking may result in overheating the brakes)**
  - **On repeated uphill and downhill roads**
  - **When traffic conditions make it difficult to keep a proper distance between vehicles because of frequent acceleration or deceleration**
  - **Interference by other radar sources**
- **Do not use the ICC system if you are towing a trailer. The system may not detect a vehicle ahead.**
- **In some road or traffic conditions, a vehicle or object can unexpectedly come into the sensor detection zone and cause automatic braking. Always stay alert and avoid using the ICC system where not recommended in this warning section.**

The ICC system will not detect the following objects:

- Stationary or slow moving vehicles
- Pedestrians or objects in the roadway
- Oncoming vehicles in the same lane
- Motorcycles traveling offset in the travel lane

The following are some conditions in which the radar sensor cannot properly detect a vehicle ahead and the system may not operate properly:

- When the sensor detection is reduced (conditions such as rain, snow, fog, dust storms, sandstorms, and road spray from other vehicles)
- Driving on a steep downhill slope or roads with sharp curves
- Driving on a bumpy road surface, such as an uneven dirt road
- If dirt, ice, snow or other material is covering the radar sensor area
- A complicated-shaped vehicle such as a car carrier trailer or flatbed truck/trailer is near the vehicle ahead
- Interference by other radar sources
- When your vehicle is towing a trailer, etc.
- When excessively heavy baggage is loaded in the rear seat or cargo area of your vehicle

The ICC system is designed to automatically check the radar sensor's operation within the limitations of the system.

The detection zone of the radar sensor is limited. A vehicle ahead must be in the detection zone for the ICC system to maintain the selected distance from the vehicle ahead. A vehicle ahead may move outside of the detection zone due to its position within the same lane of travel. Motorcycles may not be detected in the same lane ahead if they are traveling offset from the center line of the lane. A vehicle that is entering the lane ahead may not be detected until the vehicle has completely moved into the lane.

If this occurs, the ICC system may warn you by blinking the system indicator and sounding the chime. The driver may have to manually control the proper distance away from the vehicle traveling ahead.

The ICC system (with ProPILOT™ Assist) uses a multi-sensing front camera. The following are some conditions in which the camera may not properly detect a vehicle and detection of a vehicle ahead may be delayed:

- Poor visibility (conditions such as rain, snow, fog, dust storms, sandstorms, and road spray from other vehicles)
- The camera area of the windshield is fogged up or covered with dirt, water drops, ice, snow, etc.
- Strong light (for example, sunlight or high beams from oncoming vehicles) enters the front camera
- Strong light causes the area around the pedestrian to be cast in a shadow, making it difficult to see
- A sudden change in brightness occurs (for example, when the vehicle enters or exits a tunnel or shaded area or lightning flashes)

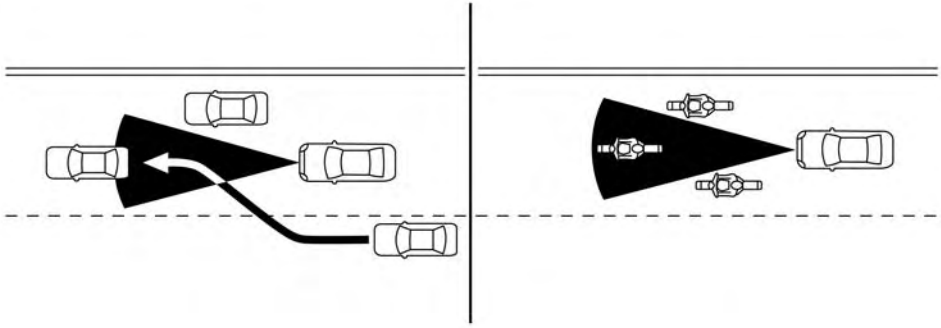

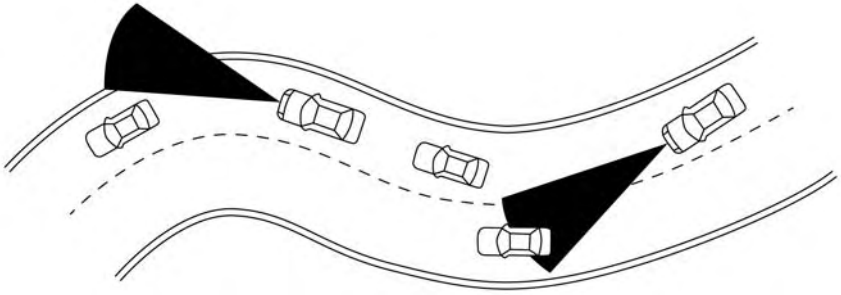

When driving on some roads, such as winding, hilly, curved, narrow roads, or roads which are under construction, the radar sensor may detect vehicles in a different lane, or may temporarily not detect a vehicle traveling ahead. This may cause the radar system to decelerate or accelerate the vehicle.

The detection of vehicles may also be affected by vehicle operation (steering maneuver or traveling position in the lane, etc.) or vehicle condition.

If this occurs, the ICC system may warn you by blinking the system indicator and sounding the chime unexpectedly. You will have to manually control the proper distance away from the vehicle traveling ahead.

Automatic cancellation

The following are conditions in which the ICC system may be temporarily unavailable. In these instances, the ICC system may not cancel and may not be able to maintain the selected following distance from the vehicle ahead.

Condition A

Under the following conditions, the ICC system is automatically canceled. A chime will sound and the system will not be able to be set:

- Any door is open.
- The driver's seat belt is not fastened.
- The vehicle ahead is not detected and your vehicle is traveling below the speed of 15 mph (24 km/h).
- Your vehicle has been stopped by the ICC system for approximately 3 minutes or longer.
- The shift lever is not in the D (Drive) position or B mode.
- The electronic parking brake is applied.
- The VDC system is turned off.
- The AEB applies harder braking.
- VDC (including the traction control system) operates.
- A wheel slips.
- When distance measurement becomes impaired due to adhesion of dirt or obstruction to the sensor.
- When the radar signal is temporarily interrupted.

Action to take:

When the conditions listed above are no longer present, turn the system off using the ProPILOT™ Assist switch. Turn the ProPILOT Assist system back on to use the system.

NOTE:
When the ICC system is canceled under the following conditions at a standstill, the electronic parking brake is automatically activated:

- **Any door is open.**
- **The driver's seat belt is not fastened.**
- **Your vehicle has been stopped by the ICC system for approximately 3 minutes or longer.**
- **The shift lever is not in the D (Drive) position or B mode.**
- **The VDC system is turned off.**
- **When distance measurement becomes impaired due to adhesion of dirt or obstruction to the sensor.**
- **When the radar signal is temporarily interrupted.**

Condition B

When the radar sensor of the front bumper is covered with dirt or is obstructed, the ICC system will automatically be canceled.

The chime will sound and the "Not Available: Front Radar Blocked" warning message will appear in the vehicle information display.

Action to take:

If the warning message appears, stop the vehicle in a safe place, place the shift lever in the P (Park) position, and turn the EV system off. When the radar signal is temporarily interrupted, clean the sensor area of the front bumper and restart the EV system. If the "Not Available: Front Radar Blocked" warning message continues to be displayed, have the system checked. It is recommended that you visit a NISSAN certified LEAF dealer for this service.

Condition C

When driving on roads with limited road structures or buildings (for example, long bridges, deserts, snowfields, driving next to long walls), the system may illuminate the system warning light and display the "Not Available: Front Radar Blocked" message.

Action to take:

When the above driving conditions no longer exist, turn the system back on.

ICC system malfunction

If the ICC system malfunctions, it will be turned off automatically, a chime will sound, and the speed control status warning (orange) will illuminate.

Action to take:

If the warning light comes on, stop the vehicle in a safe place. Turn the EV system off, restart the EV system and set the ICC system again. If it is not possible to set the ICC system or the indicator stays on, it may be a malfunction. Although the normal driving can be continued, the ICC system should be inspected. It is recommended that you visit a NISSAN certified LEAF dealer for this service.

ICC sensor maintenance

The radar sensor is located on the front of the vehicle.

To keep the ICC system operating properly, be sure to observe the following:

- Always keep the sensor area clean.
- Do not strike or damage the areas around the sensor.
- Do not attach a sticker (including transparent material) or install an accessory near the sensor. This could cause failure or malfunction.
- Do not attach metallic objects near the sensor area (brush guard, etc.). This could cause failure or malfunction.
- Do not alter, remove, or paint the front bumper.

Before customizing or restoring the front bumper, it is recommended that you visit a NISSAN certified LEAF dealer.

The camera sensor is located above the inside mirror.

To keep the proper operation of the systems and prevent a system malfunction, be sure to observe the following:

- Always keep the windshield clean.
- Do not attach a sticker (including transparent material) or install an accessory near the camera unit.
- Do not place reflective materials, such as white paper or a mirror, on the instrument panel. The reflection of sunlight may adversely affect the camera unit's capability of detecting the lane markers.
- Do not strike or damage the areas around the camera unit. Do not touch the camera lens or remove the screw located on the camera unit.

If the camera unit is damaged due to an accident, it is recommended that you visit a NISSAN certified LEAF dealer.

STEERING ASSIST

WARNING

Failure to follow the warnings and instructions for proper use of the Steering Assist could result in serious injury

or death.

- **The Steering Assist is not a replacement for proper driving procedures and is not designed to correct careless, inattentive or absent-minded driving. The Steering Assist will not always steer the vehicle to keep it in the lane. It is not designed to prevent loss of control. It is the driver's responsibility to stay alert, drive safely, keep the vehicle in the traveling lane, and be in control of the vehicle at all times.**
- **As there is a performance limit to the Steering Assist's capability, never rely solely on the system. The Steering Assist does not function in all driving, traffic, weather, and road conditions. Always drive safely, pay attention to the operation of the vehicle, and manually control your vehicle appropriately.**
- **The Steering Assist is intended for use on well-developed freeways or highways with gentle (moderate) curves. To avoid risk of an accident, do not use this system on local or non-highway roads.**
- **The Steering Assist only steers the vehicle to maintain its position in the center of a lane. The vehicle will not steer to avoid objects in the road in front of the vehicle or to avoid a vehicle moving into your lane.**
- **It is the driver's responsibility to stay alert, drive safely, keep the vehicle in the traveling lane, and be in control of the vehicle at all times. Never take your hands off the steering wheel when driving. Always keep your hands on the steering wheel and drive your vehicle safely.**
- **Always drive carefully and attentively when using the Steering Assist. Read and understand the Owner's Manual thoroughly before using the Steering Assist. To avoid serious injury or death, do not rely on the system to prevent accidents or to control the vehicle's speed in emergency situations. Do not use the Steering Assist except in appropriate road and traffic conditions.**

Steering Assist operation

The Steering Assist controls the steering system to help keep your vehicle near the center of the lane when driving. The Steering Assist is combined with the Intelligent Cruise Control (ICC) system. For additional information, refer to "Intelligent Cruise Control (ICC) (with ProPILOT™ Assist)" in this section.

The Steering Assist can be activated when the following conditions are met:

- The ICC system is activated.
- Lane markers on both sides are clearly detected.
- A vehicle ahead is detected (when the vehicle is driven at speeds under 37 mph [60 km/h]).
- The driver grips the steering wheel.
- The vehicle is driven at the center of the lane.
- The turn signals are not operated.
- The windshield wiper is not operated in the low (LO) or high (HI) speed operation (the steering assist function is disabled after the wiper operates for approximately 10 seconds).

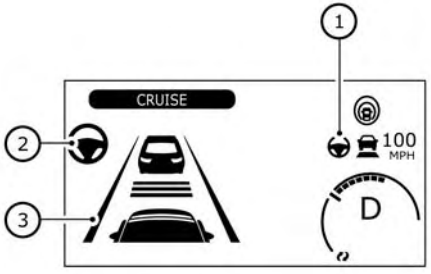

Steering Assist display and indicators

1. **Steering Assist status indicator/warning**

   Displays the status of the Steering Assist by the color of the indicator/warning

   - Steering Assist indicator (gray): Steering Assist standby
   - Steering Assist indicator (green): Steering Assist active
   - Steering Assist indicator (yellow): Steering Assist malfunction

2. **Steering Assist indicator**

   Indicates the status of the Steering Assist by the color of the indicator

   - Steering Assist indicator (gray): Steering Assist standby
   - Steering Assist indicator (green): Steering Assist active

3. **Lane marker indicator**

   Indicates whether the system detects the lane marker

   - Lane marker indicator (gray): Lane markers not detected
   - Lane marker indicator (green): Lane markers detected
   - Lane marker indicator (yellow): Lane departure is detected

When the Steering Assist is in operation, the Steering Assist status indicator ①, the Steering Assist indicator ②, and the lane marker indicator ③ on the vehicle information display turn green. A chime sounds when the Steering Assist initially activates.

When the Steering Assist deactivates, the Steering Assist status indicator ①, the Steering Assist indicator ②, and the lane marker indicator ③ on the vehicle information display turn gray and a chime sounds twice.

Intelligent Lane Intervention (I-LI)

When a curve or strong cross wind exceeds the capabilities of the Steering Assist and your vehicle approaches either the left or the right side of the traveling lane, a warning chime sounds and the I-LI indicator light (orange) on the instrument panel flashes to alert the driver. Then, the I-LI system automatically applies the brakes for a short period of time to help assist the driver to return the vehicle to the center of the traveling lane. This action is in addition to any Steering Assist actions.

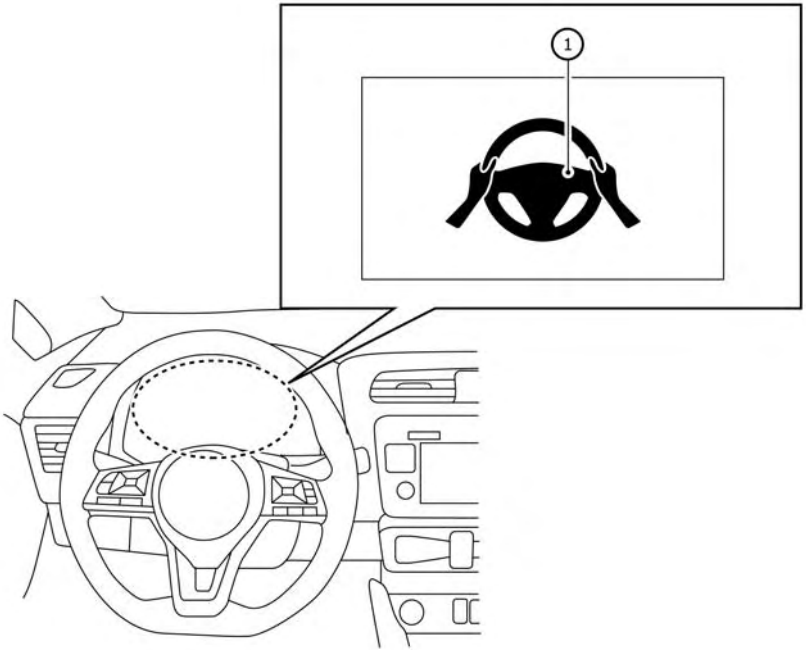

Hands on detection

When the Steering Assist is activated, it monitors the driver's steering wheel operation.

If the steering wheel is not operated or the driver takes his/her hands off the steering wheel for a period of time, the warning ① appears in the vehicle information display.

If the driver does not operate the steering wheel after the warning has been displayed, an audible alert sounds and the warning flashes in the vehicle information display, followed by a quick brake application to request the driver to take control of the vehicle again.

If the driver still does not respond, the ProPILOT™ Assist turns on the hazard flasher and slows the vehicle to a complete stop.

The driver can cancel the deceleration at any time by steering, braking, accelerating, or operating the ProPILOT Assist switch.

WARNING

Steering Assist is not a system for hands-free driving. Always keep your hands on the steering wheel and drive your vehicle safely. Failure to do so

could cause a collision resulting in serious personal injury or death.

NOTE:
If the driver softly touches (instead of firmly grips) the steering wheel, the Steering Assist may not detect the steering wheel operation and the warning may be displayed. When the driver holds and operates the steering wheel again, the warning turns off and the Steering Assist resumes automatically.

Steering Assist limitations

WARNING

- In the following situations, the camera may not detect lane markers correctly or may detect lane markers incorrectly and the Steering Assist may not operate properly:
  - When driving on roads where there are multiple parallel lane markers, lane markers that are faded or not painted clearly, nonstandard lane markers, or lane markers covered with water, dirt, snow, etc.
  - When driving on roads with discontinued lane markers
  - When driving on roads with a widening or narrowing lane width
  - When driving on roads where there are multiple lanes or unclear lane markers due to road construction
  - When driving on roads where there are sharply contrasting objects, such as shadows, snow, water, wheel ruts, seams, or lines remaining after road repairs (the Steering Assist could detect these items as lane markers)
  - When driving on roads where the traveling lane merges or separates
- Do not use the Steering Assist under the following conditions because the system may not properly detect lane markers. Doing so could cause a loss of vehicle control and result in an accident.
  - During bad weather (rain, fog, snow, dust, etc.)
  - When rain, snow, sand, etc., is thrown up by the wheels of other vehicles
  - When dirt, oil, ice, snow, water, or another object adheres to the camera unit
  - When the lens of the camera unit is foggy
  - When strong light (for example, sunlight or high beams from oncoming vehicles) shines on the camera
  - When the headlights are not bright due to dirt on the lens or the headlights are off in tunnels or in darkness
  - When a sudden change in brightness occurs (for example, when the vehicle enters or exits a tunnel or is under a bridge)
  - When driving on roads where the traveling lane merges or separates or where there are temporary lane markers because of road construction
  - When there is a lane closure due to road repairs
  - When driving on a bumpy road surface, such as an uneven dirt road

- **When driving on sharp curves or winding roads**
- **When driving on repeated uphill and downhill roads**

- **Do not use the Steering Assist under the following conditions because the system will not operate properly:**
  - **When driving with a tire that is not within normal tire conditions (for example, tire wear, abnormal tire pressure, installation of a spare tire, tire chains, nonstandard wheels)**
  - **When the vehicle is equipped with non-original brake or suspension parts**
  - **When an object such as a sticker or cargo obstructs the camera**
  - **When excessively heavy baggage is loaded in the rear seat or luggage area of your vehicle**
  - **When the vehicle load capacity is exceeded**
  - **When towing a trailer or other vehicle**
- **Excessive noise will interfere with the warning chime sound, and the beep may not be heard.**
- **For the ProPILOT™ Assist system to operate properly, the windshield in front of the camera must be clean. Replace worn wiper blades. The correct size wiper blades must be used to help make sure the windshield is kept clean. Only use Genuine NISSAN wiper blades, or equivalent wiper blades, that are specifically designed for use on your vehicle model and model year. It is recommended that you visit a NISSAN certified LEAF dealer for the correct parts for your vehicle.**

Steering Assist temporary standby

Automatic standby due to driving operation:

When the driver activates the turn signal, the Steering Assist is temporarily placed in a standby mode. (The Steering Assist restarts automatically when the operating conditions are met again.)

Automatic standby:

In the following cases, a warning message is displayed along with the chime, and the Steering Assist is placed in a temporary standby mode. (The Steering Assist restarts automatically when the operating conditions are met again.)

- When lane markers on both sides are no longer detected
- When a vehicle ahead is no longer detected under approximately 37 mph (60 km/h)

Steering Assist cancel

Under the following conditions, the Steering Assist cancels, and the Steering Assist status indicator and the Steering Assist indicator turn off:

- When unusual lane markers appear in the traveling lane or when the lane marker cannot be correctly detected for some time due to certain conditions (for example, a snow rut, the reflection of light on a rainy day, the presence of several unclear lane markers)
- When the windshield wiper operates in the low (LO) or high (HI) speed operation (the Steering Assist is disabled when the wiper operates for more than approximately 10 seconds)

Action to take:

Turn the ICC system off using the CANCEL switch. When the conditions listed above are no longer present, turn the ICC system on again.

Steering Assist malfunction

When the system malfunctions, it turns off automatically. The Steering Assist status warning illuminates (orange). A chime may sound depending on the situation.

Action to take:

Stop the vehicle in a safe location, place the vehicle in the P (Park) position, turn the EV system off, restart the EV system, resume driving, and set the Intelligent Cruise Control system again. If the warning (orange) continues to illuminate, the Steering Assist is malfunctioning. Although the vehicle is still drivable under normal conditions, have the system checked. It is recommended that you visit a NISSAN certified LEAF dealer for this service.

Steering Assist maintenance

The camera sensor is located above the inside mirror.

To keep the proper operation of the system and prevent a system malfunction, be sure to observe the following:

- Always keep the windshield clean.
- Do not attach a sticker (including transparent material) or install an accessory near the camera unit.
- Do not place reflective materials, such as white paper or a mirror, on the instrument panel. The reflection of sunlight may adversely affect the camera unit's capability of detecting the lane markers.
- Do not strike or damage the areas around the camera unit. Do not touch the camera lens or remove the screw located on the camera unit.

If the camera unit is damaged due to an accident, it is recommended that you visit a NISSAN certified LEAF dealer.

Radio frequency statement

For USA

FCC ID OAYARS4B

This device complies with Part 15 of the FCC Rules. Operation is subject to the following two conditions:

1. This device may not cause harmful interference, and
2. This device must accept any interference received, including interference that may cause undesired operation.

FCC Warning

Changes or modifications not expressly approved by the party responsible for compliance could void the user's authority to operate the equipment.

For Canada

Model: ARS4–B

IC: 4135A-ARS4B

FCC ID: OAYARS4B

This device complies with Part 15 of the FCC Rules and with Industry Canada licence-exempt RSS standard(s). Operation is subject to the following two conditions:

1. This device may not cause harmful interference, and
2. This device must accept any interference received, including interference that may cause undesired operation.

Le present appareil est conforme aux CNR d'Industrie Canada applicables aux appareils radio exempts de licence. L'exploitation est autorisee aux deux conditions suivantes:

1. L'appareil ne doit pas produire de brouillage, et
2. L'utilisateur de l'appareil doit accepter tout brouillage radioelectrique subi, meme si le brouillage est susceptible d'en compromettre le fonctionnement.

Radio Frequency Radiation Exposure Information:

This equipment complies with FCC radiation exposure limits set forth for an uncontrolled environment.

This equipment should be installed and operated with minimum distance of 30 cm between the radiator and your body.

The transmitter must not be co-located or operating in conjunction with any other antenna or transmitter.

Cet equipement est conforme aux limites d'exposition aux rayonnements IC etablies pour un environnement non controle. Cet equipement doit etre installe et utilise avec un minimum de 30 cm de distance entre la source de rayonnement et votre corps.

FCC Notice

Changes or modifications not expressly approved by the party responsible for compliance could void the user's authority to operate the equipment.

CONVENTIONAL (FIXED SPEED) CRUISE CONTROL MODE

NOTE:
ProPILOT™ Assist provides no approach warnings, automatic braking, or steering assist in the conventional (fixed speed) cruise control mode.

This mode allows driving at a speed between 25 to 90 mph (40 to 144 km/h) without keeping your foot on the accelerator pedal.

WARNING

- **In the conventional (fixed speed) cruise control mode, a warning chime does not sound to warn you if you are too close to the vehicle ahead, as neither the presence of the vehicle ahead nor the vehicle-to-vehicle distance is detected.**
- **Pay special attention to the distance between your vehicle and the vehicle ahead of you or a collision could occur.**
- **Always confirm the setting in the ICC system display.**
- **Do not use the conventional (fixed speed) cruise control mode when driving under the following conditions:**
  - **When it is not possible to keep the vehicle at a set speed**
  - **In heavy traffic or in traffic that varies in speed**
  - **On winding or hilly roads**
  - **On slippery roads (rain, snow, ice, etc.)**
  - **In very windy areas**
- **Doing so could cause a loss of vehicle control and result in an accident.**

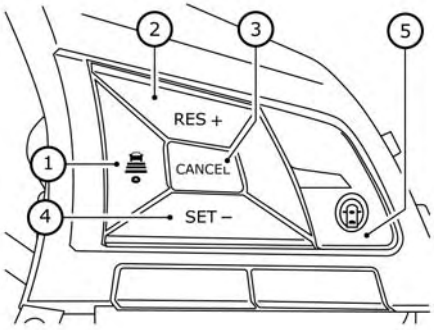

Conventional (fixed speed) cruise control switches

1. DISTANCE switch:
   - Long
   - Middle
   - Short
2. RES+ switch:

   Resumes set speed or increases speed incrementally
3. CANCEL switch:

   Deactivates the system without erasing the set speed
4. SET- switch:

   Sets desired cruise speed or reduces speed incrementally
5. ProPILOT™ Assist switch:

   Master switch to activate the system

Conventional (fixed speed) cruise control mode display and indicators

The display is located in the vehicle information display:

1. Cruise indicator:

   This indicator indicates the condition of the ICC system depending on a color.
   - Cruise control ON indicator (gray): Indicates that the ProPILOT™ Assist switch is on
   - Cruise control SET indicator (green): Indicates that the cruising speed is set
   - Cruise control warning (yellow): Indicates that there is a malfunction in the ICC system

2. Set vehicle speed indicator:

   This indicator indicates the set vehicle speed. For Canadian models, the speed is displayed in km/h.

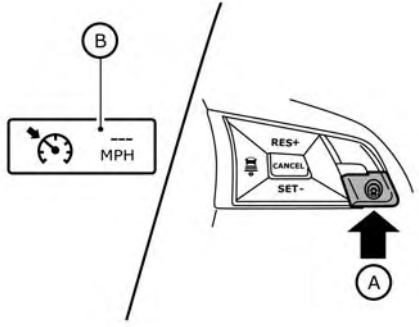

Operating conventional (fixed speed) cruise control mode

To turn on the conventional (fixed speed) cruise control mode, push and hold the ProPILOT™ Assist switch Ⓐ for longer than about 1.5 seconds.

When pushing the ProPILOT Assist switch on, the conventional (fixed speed) cruise control mode display and indicators Ⓑ are displayed in the vehicle information display. After you hold ProPILOT Assist switch on for longer than about 1.5 seconds, the ICC system display turns off. The cruise indicator appears. You can now set your desired cruising speed. Pushing the ProPILOT Assist switch again will turn the system completely off. When the power switch is placed in the OFF position, the system is also automatically turned off.

To use the ICC system again, quickly push and release the ProPILOT Assist switch (vehicle-to-vehicle distance control mode) or push and hold it (conventional cruise control mode) again to turn it on.

CAUTION

To avoid accidentally engaging cruise control, make sure to turn the ProPILOT Assist switch off when not using the ICC system.

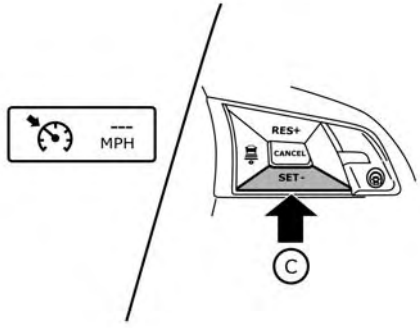

To set cruising speed, accelerate your vehicle to the desired speed, push the SET- Ⓒ switch and release it. (The color of the cruise indicator changes to green and set vehicle speed indicator comes on.) Take your foot off the accelerator pedal. Your vehicle will maintain the set speed.

- To pass another vehicle, depress the accelerator pedal. When you release the pedal, the vehicle will return to the previously set speed.
- The vehicle may not maintain the set speed when going up or down steep hills. If this happens, manually maintain vehicle speed.

To cancel the preset speed, use any of the following methods:

1. Push the CANCEL switch. The vehicle speed indicator will turn off.
2. Tap the brake pedal. The vehicle speed indicator will turn off.
3. Turn the ProPILOT Assist switch off. Both the cruise indicator and vehicle speed indicator will turn off.

To reset at a faster cruising speed, use one of the following three methods:

1. Depress the accelerator pedal. When the vehicle attains the desired speed, push and release the SET- switch.
2. Push and hold the RES+ switch. When the vehicle attains the desired speed, release the switch.
3. Push, then quickly release the RES+ switch. Each time you do this, the set speed will increase by about 1 mph (1.6 km/h).

To reset at a slower cruising speed, use one of the following three methods:

1. Lightly tap the brake pedal. When the vehicle attains the desired speed, push the SET- switch and release it.
2. Push and hold the SET- switch. Release the switch when the vehicle slows down to the desired speed.
3. Push, then quickly release the SET- switch. Each time you do this, the set speed will decrease by about 1 mph (1.6 km/h).

To resume the preset speed, push and release the RES+ switch. The vehicle will resume the last set cruising speed when the vehicle speed is over 25 mph (40 km/h).

AUTOMATIC EMERGENCY BRAKING (AEB) (IF SO EQUIPPED)

WARNING

Failure to follow the warnings and instructions for proper use of the AEB system could result in serious injury or death.

- **The AEB system is a supplemental aid to the driver. It is not a replacement for the driver's attention to traffic conditions or responsibility to drive safely. It cannot prevent accidents due to carelessness or dangerous driving techniques.**
- **The AEB system does not function in all driving, traffic, weather and road conditions.**

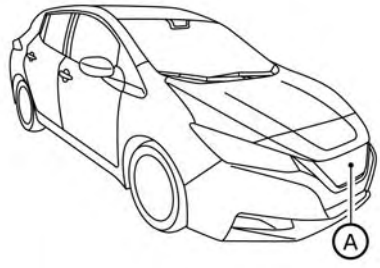

The AEB system can assist the driver when there is a risk of a forward collision with the vehicle ahead in the traveling lane.

The AEB system uses a radar sensor Ⓐ located on the front of the vehicle to measure the distance to the vehicle ahead in the same lane.

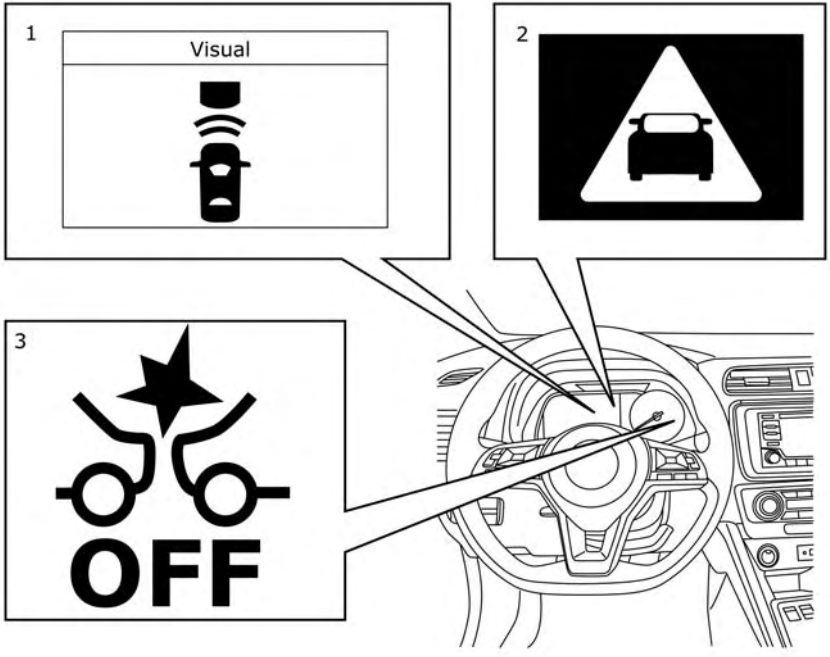

AEB SYSTEM OPERATION

1. Vehicle ahead detection indicator
2. AEB emergency warning indicator
3. AEB system warning light

The AEB system will function when your vehicle is driven at speeds above approximately 3 mph (5 km/h).

If a risk of a forward collision is detected, the AEB system will provide an initial warning to the driver by both a visual and audible alert.

If the driver applies the brakes quickly and forcefully after the warning, and the AEB system detects that there is still the possibility of a forward collision, the system will automatically increase the braking force. If the driver does not take action, the AEB system issues the second visual warning (red) and audible warning and also applies partial braking.

If the risk of a collision becomes imminent, the AEB system applies harder braking automatically.

NOTE:
The vehicle's brake lights come on when braking is performed by the AEB system.

Depending on vehicle speed and distance to the vehicle ahead, as well as driving and roadway conditions, the system may help the driver avoid a forward collision or may help mitigate the consequences of a collision, should one be unavoidable. If the driver is handling the steering wheel, accelerating or braking, the AEB system will function later or will not function.

The automatic braking will cease under the following conditions.

- When the steering wheel is turned as far as necessary to avoid a collision.
- When the accelerator pedal is depressed.
- When there is no longer a vehicle detected ahead.

If the AEB system has stopped the vehicle, the vehicle will remain at a standstill for approximately 2 seconds before the brakes are released.

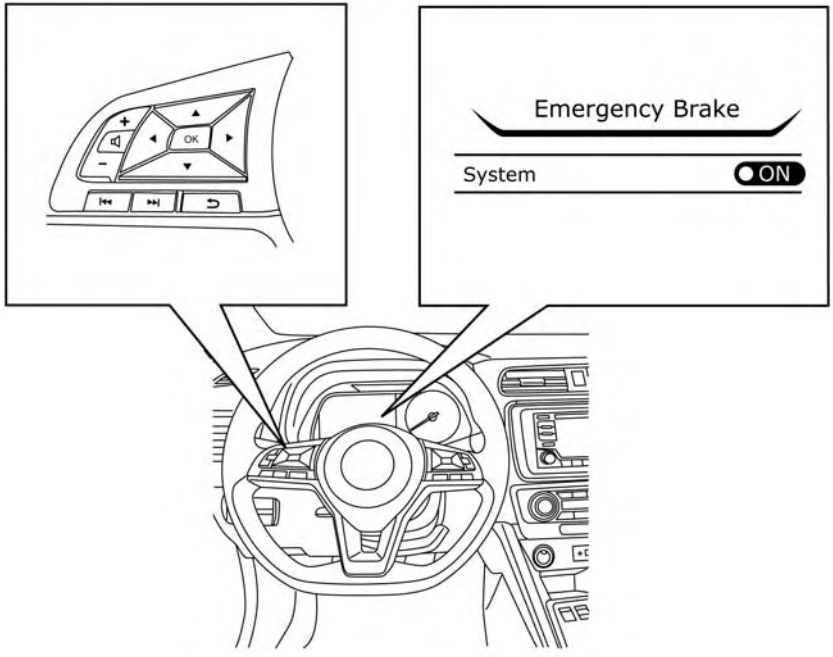

TURNING THE AEB SYSTEM ON/OFF

Perform the following steps to turn the AEB system ON or OFF:

1. Press the ◀▶ button until "Settings" displays in the vehicle information display. Use the ▲▼ button to select "Driver Assistance." Then press the OK button.
2. Select "Emergency Brake" and press the OK button.
3. Select "System" and use the OK button to turn the system on or off.

When the AEB system is turned off, the AEB system warning light illuminates.

NOTE:
The AEB system will be automatically turned on when the EV system is restarted.

AEB SYSTEM LIMITATIONS

WARNING

Listed below are the system limitations for the AEB system. Failure to operate the vehicle in accordance with these system limitations could result in serious injury or death.

- **The AEB system cannot detect all vehicles under all conditions.**
- **The radar sensor does not detect the following objects:**
  - **Pedestrians, animals or obstacles in the roadway.**
  - **Oncoming vehicles.**
  - **Crossing vehicles.**
- **The radar sensor has some performance limitations. If a stationary vehicle is in the vehicles's path, the AEB system will not function when the vehicle is driven at speeds over approximately 50 mph (80 km/h).**
- **The radar sensor may not detect a vehicle ahead in the following conditions:**
  - **Dirt, ice, snow or other material covering the radar sensor.**
  - **Interference by other radar sources.**
  - **Snow or road spray from traveling vehicles.**
  - **If the vehicle ahead is narrow (e.g. motorcycle).**
  - **When driving on a steep downhill slope or roads with sharp curves.**
- **In some road or traffic conditions, the AEB system may unexpectedly apply partial braking. When acceleration is necessary, continue to depress the accelerator pedal to override the system.**
- **Braking distances increase on slippery surfaces.**
- **The system is designed to automatically check the sensor's functionality, within certain limitations. The system may not detect some forms of obstructions of the sensor area such as ice, snow, stickers, etc. In these cases, the system may not be able to worn the driver properly. Be sure that you check, clean and clear the sensor area regularly.**
- **Excessive noise will interfere with the warning chime sound, and the chime may not be heard.**

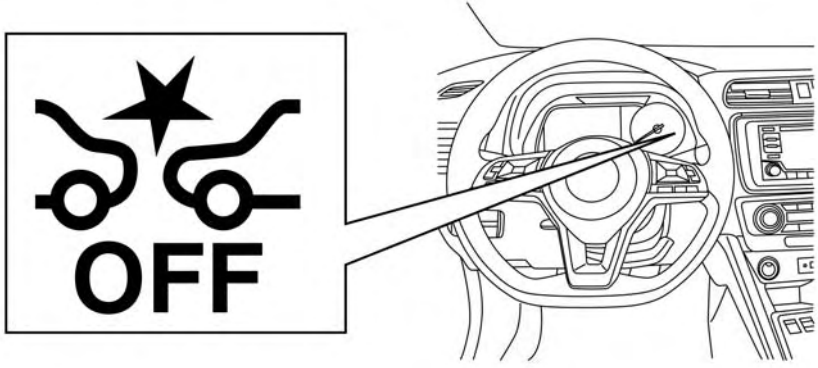

System temporarily unavailable

Condition A

When the radar sensor picks up interference from another radar source, making it impossible to detect a vehicle ahead, the AEB system is automatically turned off.

The AEB system warning light (orange) will illuminate.

Action to take

When the above conditions no longer exist, the AEB system will resume automatically.

Condition B

When the sensor area of the front bumper is covered with dirt or is obstructed, making it impossible to detect a vehicle ahead, the AEB system is automatically turned off.

The AEB system warning light (orange) will illuminate and the "Not Available: Front Radar Blocked" warning message will appear in the vehicle information display.

When driving on roads with limited road structures or buildings (for example, long bridges, deserts, snow fields, driving next to long walls), the system may illuminate the system warning light (orange) and display the "Not Available: Front Radar Blocked" message.

Action to take

If the warning light (orange) comes on, stop the vehicle in a safe place, place the shift lever in the P (Park) position and turn the EV system off. Clean the radar cover on the lower grille with a soft cloth, and restart the EV system. If the warning light continues to illuminate, have the AEB system checked. It is recommended that you visit a NISSAN certified LEAF dealer for this service.

SYSTEM MALFUNCTION

If the AEB system malfunctions, it will be turned off automatically, a chime will sound, the AEB system warning light (orange) will illuminate and the warning message [Malfunction] will appear in the vehicle information display.

Action to take:

If the warning light (orange) comes on, stop the vehicle in a safe location, turn the EV system off and restart the EV system. If the warning light continues to illuminate, have the AEB system checked. It is recommended that you visit a NISSAN certified LEAF dealer for this service

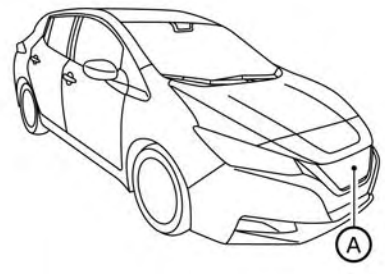

SYSTEM MAINTENANCE

The sensor Ⓐ is located on the front of the vehicle.

To keep the system operating properly, be sure to observe the following:

- Always keep the sensor area of the front bumper clean.
- Do not strike or damage the areas around the sensor.
- Do not cover or attach stickers or similar objects on the front bumper near the sensor area. This could cause failure or malfunction.

- Do not attach metallic objects near the sensor area (brush guard, etc.). This could cause failure or malfunction.
- Do not alter, remove or paint the front bumper. Before customizing or restoring the front bumper, it is recommended that you visit a NISSAN certified LEAF dealer.

Radio frequency statement

For USA

FCC ID OAYARS4B

This device complies with Part 15 of the FCC Rules. Operation is subject to the following two conditions:

1. **This device may not cause harmful interference, and**
2. **This device must accept any interference received, including interference that may cause undesired operation.**

FCC Warning

Changes or modifications not expressly approved by the party responsible for compliance could void the user's authority to operate the equipment.

For Canada

Model: ARS4–B

IC: 4135A-ARS4B

FCC ID: OAYARS4B

This device complies with Part 15 of the FCC Rules and with Industry Canada licence-exempt RSS standard(s). Operation is subject to the following two conditions:

1. **This device may not cause harmful interference, and**
2. **This device must accept any interference received, including interference that may cause undesired operation.**

Le présent appareil est conforme aux CNR d'Industrie Canada applicables aux appareils radio exempts de licence. L'exploitation est autorisée aux deux conditions suivantes:

1. **L'appareil ne doit pas produire de brouillage, et**
2. **L'utilisateur de l'appareil doit ac- cepter tout brouillage radioélectrique subi, même si le brouillage est susceptible d'en compromettre le fonctionnement.**

Radio frequency radiation exposure information:

This equipment complies with FCC and IC radiation exposure limits set forth for an uncontrolled environment.

This equipment should be installed and operated with minimum distance of 30 cm between the radiator and your body.

This transmitter must not be co-located or operating in conjunction with any other antenna or transmitter.

Cet équipement est conforme aux limites d'exposition aux rayonnements IC établies pour un environnement non contrôlé.

Cet équipement doit être installé et utilisé avec un minimum de 30 cm de distance entre la sourcederayonnement et votre corps.

FCC Notice

Changes or modifications not expressly approved by the party responsible for compliance could void the user's authority to operate the equipment.

AUTOMATIC EMERGENCY BRAKING (AEB) WITH PEDESTRIAN DETECTION (IF SO EQUIPPED)

WARNING

Failure to follow the warnings and instructions for proper use of the AEB with Pedestrian Detection system could result in serious injury or death.

- **The AEB with Pedestrian Detection system is a supplemental aid to the driver. It is not a replacement for the driver's attention to traffic conditions or responsibility to drive safely. It cannot prevent accidents due to carelessness or dangerous driving techniques.**
- **The AEB with Pedestrian Detection system does not function in all driving, traffic, weather and road conditions.**

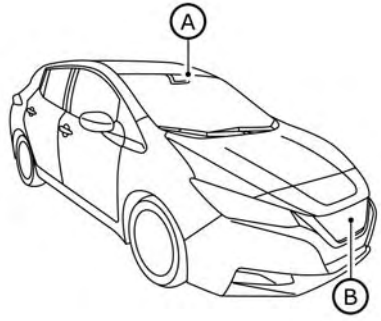

The AEB with Pedestrian Detection system can assist the driver when there is a risk of a forward collision with the vehicle ahead in the traveling lane or with a pedestrian.

The AEB with Pedestrian Detection system uses a radar sensor located on the front of the vehicle Ⓑ to measure the distance to the vehicle ahead in the same lane. For pedestrians, the AEB with Pedestrian Detection system uses a camera installed behind the windshield Ⓐ in addition to the radar sensor.

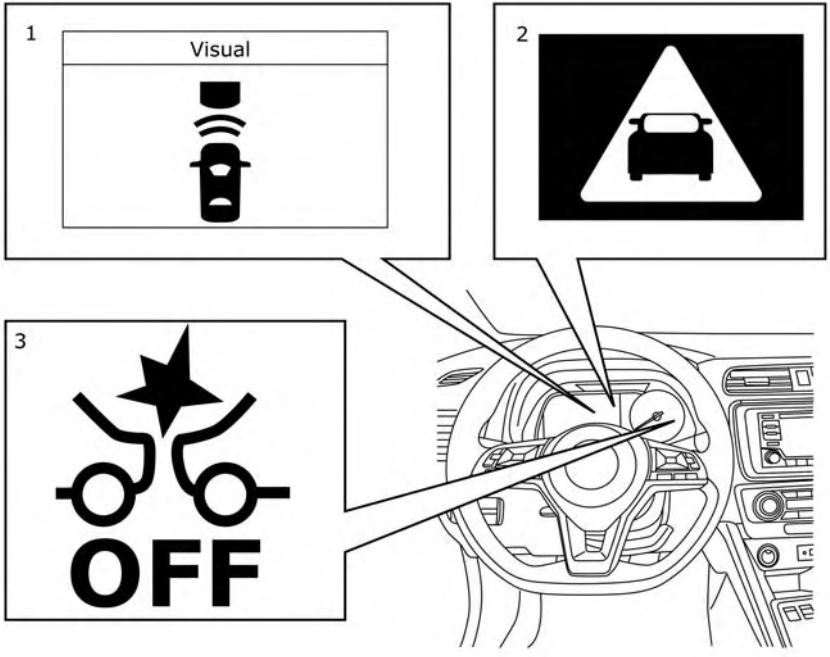

1. Vehicle ahead detection indicator
2. AEB emergency warning indicator
3. AEB system warning light

The AEB with Pedestrian Detection system operates at speeds above approximately 3 mph (5 km/h). For the pedestrian detection function, the AEB with Pedestrian Detection system operates at speeds between 6 – 37 mph (10 – 60 km/h).

If a risk of a forward collision with a vehicle is detected, the AEB with Pedestrian Detection system will first provide a warning to the driver by flashing the vehicle ahead detection indicator and providing an audible alert. In addition, the AEB with Pedestrian Detection system applies partial braking. If the driver applies the brakes quickly and forcefully, but the AEB with Pedestrian Detection system detects that there is still the possibility of a forward collision, the system will automatically increase the braking force.

If the risk of a collision becomes imminent and the driver does not take action, the AEB with Pedestrian Detection system issues the second warning to the driver by flashing the AEB with Pedestrian Detection

emergency warning indicator (red), providing an audible warning, and then automatically applies harder braking.

If a risk of a forward impact with a pedestrian is detected, the AEB with Pedestrian Detection system will provide a warning to the driver by flashing the AEB with Pedestrian Detection emergency warning indicator (red), provides an audible alert and the system will apply partial braking. If the driver applies the brakes quickly and forcefully but the AEB with Pedestrian Detection system detects that there is still the possibility of a forward impact with a pedestrian, the system will automatically increase the braking force. If the risk of collision becomes imminent and the driver does not take action, the AEB with Pedestrian Detection system automatically applies harder braking.

NOTE:
The vehicle's brake lights come on when any braking is performed by the AEB with Pedestrian Detection system.

Depending on vehicle speed and distance to the vehicle or pedestrian ahead, as well as driving and roadway conditions, the system may help the driver avoid a forward collision or may help mitigate the consequences if a collision should be unavoidable. If the driver is handling the steering wheel, accelerating or braking, the AEB with Pedestrian Detection system will function later or will not function.

The automatic braking will cease under the following conditions:

- When the steering wheel is turned to avoid a collision.
- When the accelerator pedal is depressed.
- When there is no longer a vehicle or a pedestrian detected ahead.

If the AEB with Pedestrian Detection system has stopped the vehicle, the vehicle will remain at a standstill for approximately 2 seconds before the brakes are released.

TURNING THE AEB WITH PEDESTRIAN DETECTION SYSTEM ON/OFF

Perform the following steps to enable or disable the AEB with Pedestrian Detection system:

1. Press the ◀▶ button until "Settings" displays in the vehicle information display. Use the ▲▼ button to select "Driver Assistance." Then press the OK button.
2. Select "Emergency Brake" and press the OK button.
3. Select "System" and use the OK button to turn the system on or off.

When the AEB with Pedestrian Detection system is turned off, the AEB with Pedestrian Detection system warning light illuminates.

NOTE:
The AEB with Pedestrian Detection system will be automatically turned on when the EV system is restarted.

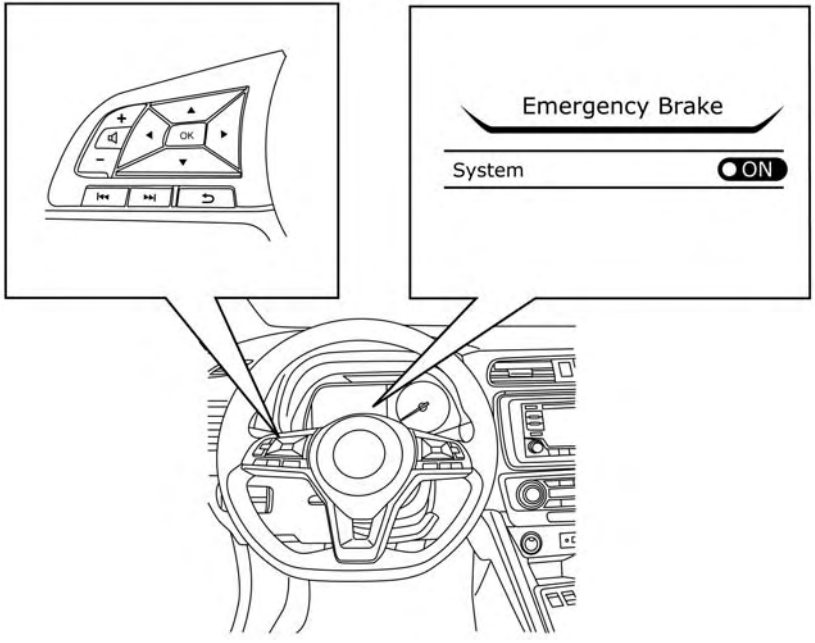

AEB WITH PEDESTRIAN DETECTION SYSTEM LIMITATIONS

WARNING

Listed below are the system limitations for the AEB with Pedestrian Detection system. Failure to operate the vehicle in accordance with these system limitations could result in serious injury or death.

- **The AEB with Pedestrian Detection system cannot detect all vehicles or pedestrians under all conditions.**
- **The AEB with Pedestrian Detection system does not detect the following objects:**
  - **Small pedestrians (including small children), animals and cyclists.**
  - **Pedestrians in wheelchairs or using mobile transport such as scooters, child-operated toys, or skateboards.**
  - **Pedestrians who are seated or otherwise not in a full upright standing or walking position.**
  - **Oncoming vehicles**
  - **Crossing vehicles**
  - **Obstacles on the roadside**
- **The AEB with Pedestrian Detection system has some performance limitations.**
  - **If a stationary vehicle is in the vehicle's path, the AEB with Pedestrian Detection system will not function when the vehicle is driven at speeds over approximately 50 mph (80 km/h).**
  - **For pedestrian detection, the AEB with Pedestrian Detection system will not function when the vehicle is driven at speeds over approximately 37 mph (60 km/h) or below approximately 6 mph (10 km/h).**
- **The AEB with Pedestrian Detection system will not function for pedestrians in darkness or in tunnels, even if there is street lighting in the area.**
- **The AEB with Pedestrian Detection system may not function if the vehicle ahead is narrow (for example, a motorcycle).**
- **The AEB with Pedestrian Detection system may not function if speed difference between the two vehicles is too small.**
- **The radar sensor AEB with Pedestrian Detection system may not function properly or detect a vehicle ahead in the following conditions:**
  - **Poor visibility (conditions such as rain, snow, fog, dust storms, sandstorms, and road spray from other vehicles)**
  - **Driving on a steep downhill slope or roads with sharp curves.**
  - **Driving on a bumpy road surface, such as an uneven dirt road.**
  - **If dirt, ice, snow or other material is covering the radar sensor area.**
  - **Interference by other radar sources.**
  - **The camera area of windshield is fogged up, or covered with dirt, water drops, ice, snow, etc.**
  - **Strong light (for example, sunlight or high beams from oncoming vehicles) enters the front camera. Strong light causes the area around the pedestrian to be cast in a shadow, making it difficult to see.**
  - **A sudden change in brightness occurs (for example, when the vehicle enters or exits a tunnel or a shaded area or lightning flashes).**
  - **The poor contrast of a person to the background, such as having clothing color or pattern which is similar to the background.**

- The pedestrian's profile is partially obscured or unidentifiable due to the pedestrian transporting luggage, wearing bulky or very loose fitting clothing or accessories.

- The system performance may degrade in the following conditions:
  - The vehicle is driven on a slippery road.
  - The vehicle is driven on a slope.
  - Excessively heavy baggage is loaded in the rear seat or the trunk room of your vehicle.
- The system is designed to automatically check the sensor's (radar and camera) functionality, within certain limitations. The system may not detect blockage of sensor areas covered by ice, snow or stickers, for example. In these cases, the system may not be able to warn the driver properly. Be sure that you check, clean and clear sensor areas regularly.
- In some road and traffic conditions, the AEB with Pedestrian Detection system may unexpectedly apply partial braking. When acceleration is necessary, depress the accelerator pedal to override the system.
- Excessive noise will interfere with the warning chime sound, and the chime may not be heard.

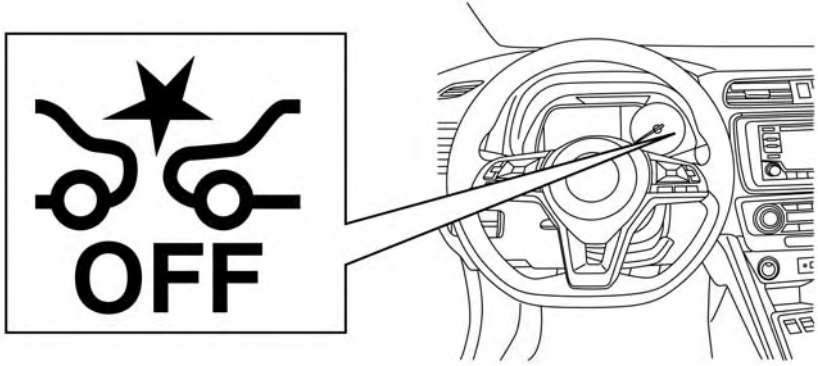

SYSTEM TEMPORARILY
UNAVAILABLE

Condition A

In the following conditions, the AEB with Pedestrian Detection system warning light blinks and the system will be turned off automatically:

- The radar sensor picks up interference from another radar source.
- The camera area of windshield is misted or frozen.
- Strong light is shining from the front.
- The cabin temperature is over approximately 104°F (40°C) in direct sunlight.
- The camera area of windshield glass is continuously covered with dirt, etc.

Action to take

When the above conditions no longer exist, the AEB with Pedestrian Detection system will resume automatically.

NOTE:
When the inside of the windshield on camera area is misted or frozen, it will take a period of time to remove it after the A/C turns on. If dirt appears on this area, it is recommended that you visit a NISSAN certified LEAF dealer.

Condition B

In the following conditions, the AEB with Pedestrian Detection system warning light will illuminate and the system will be turned off automatically and the "Not Available: Front Radar Blocked" warning message will appear in the vehicle information display:

- The sensor area of the front bumper is covered with dirt or is obstructed.

Action to take

If the warning light (orange) comes on, stop the vehicle in a safe place, place the shift lever in the P (Park) position and turn the EV system off. Clean the radar sensor area of front bumper or the camera area of windshield with a soft cloth, and restart the EV system. If the warning light continues to illuminate, have the AEB with Pedestrian Detection system checked. It is recommended that you visit a NISSAN certified LEAF dealer for this service.

SYSTEM MALFUNCTION

If the AEB with Pedestrian Detection system malfunctions, it will be turned off automatically, a chime will sound, the AEB with Pedestrian Detection system warning light (orange) will illuminate and the warning message [Malfunction] will appear in the vehicle information display.

Action to take

If the warning light (orange) comes on, stop the vehicle in a safe location, turn the EV system off and restart the EV system. If the warning light continues to illuminate, have the AEB with Pedestrian Detection system checked. It is recommended that you visit a NISSAN certified LEAF dealer for this service.

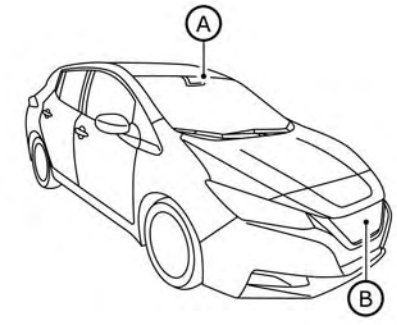

SYSTEM MAINTENANCE

The radar sensor is located on the front of the vehicle Ⓑ. The camera is located on the upper side of the windshield Ⓐ.

To keep the AEB with Pedestrian Detection system operating properly, be sure to observe the following:

- Always keep sensor areas of the front bumper and windshield clean.
- Do not strike or damage the areas around the sensors (e.g., bumper, windshield).
- Do not cover or attach stickers, or install any accessory near the sensors. This

could block sensor signals, and/or cause failure or malfunction.

- Do not attach metallic objects near the radar sensor (brush guard, etc.). This could cause failure or malfunction.
- Do not place reflective materials, such as white paper or a mirror, on the instrument panel. The reflection of sunlight may adversely affect the camera unit's detection capability.
- Do not alter, remove or paint the front bumper. Before customizing or restoring the front bumper, it is recommended that you visit a NISSAN certified LEAF dealer.

Radio frequency statement

For USA

FCC ID OAYARS4B

This device complies with Part 15 of the FCC Rules. Operation is subject to the following two conditions:

1. **This device may not cause harmful interference, and**
2. **This device must accept any interference received, including interference that may cause undesired operation.**

FCC Warning

Changes or modifications not expressly approved by the party responsible for compliance could void the user's authority to operate the equipment.

For Canada

Model: ARS4-B

IC: 4135A-ARS4B

FCC ID: OAYARS4B

This device complies with Part 15 of the FCC Rules and with Industry Canada licence-exempt RSS standard(s). Operation is subject to the following two conditions:

1. **This device may not cause interference, and**
2. **This device must accept any interference received, including interference that may cause undesired operation of the device.**

Le présent appareil est conforme aux CNR d'Industrie Canada applicables aux appareils radio exempts de licence. L'exploitation est autorisée aux deux conditions suivantes:

1. **L'appareil ne doit pas produire de brouillage, et**
2. **L'utilisateur de l'appareil doit accepter tout brouillage radioélectrique subi, même si le brouillage est susceptible d'en compromettre le fonctionnement.**

Radio frequency radiation exposure information:

This equipment complies with FCC and IC radiation exposure limits set forth for an uncontrolled environment.

This equipment should be installed and operated with minimum distance of 30 cm between the radiator and your body.

This transmitter must not be co-located or operating in conjunction with any other antenna or transmitter.

Cet équipement est conforme aux limites d'exposition aux rayonnements IC

établies pour un environnement non contrôlé.

Cet équipement doit être installé et utilisé avec un minimum de 30 cm de distance entre la source de rayonnement et votre corps.

FCC Notice

Changes or modifications not expressly approved by the party responsible for compliance could void the user's authority to operate the equipment.

INTELLIGENT DRIVER ALERTNESS (I-DA) (IF SO EQUIPPED)

WARNING

Failure to follow the warnings and instructions for proper use of the I-DA system could result in serious injury or death.

- **The I-DA system is only a warning to inform the driver of a potential lack of driver attention or drowsiness. It will not steer the vehicle or prevent loss of control.**
- **The I-DA system does not detect and provide an alert of the driver's lack of attention or fatigue in every situation.**
- **It its the driver's responsibility to:**
  - **stay alert,**
  - **drive safely,**
  - **keep the vehicle in the traveling lane,**
  - **be in control of the vehicle at all times,**
  - **avoid driving when tired,**
  - **avoid distractions (texting, etc.).**

The I-DA system helps alert the driver if the system detects a lack of attention or driving fatigue.

The system monitors driving style and steering behavior over a period of time, and it detects changes from the normal pattern. If the system detects that driver attention is decreasing over a period of time, the system uses audible and visual warnings to suggest that the driver take a break.

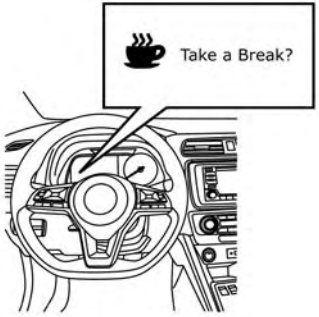

I-DA SYSTEM OPERATION

If the system detects driver fatigue or that driver attention is decreasing, the message "Take a break?" appears in the vehicle information display and a chime sounds when the vehicle is driven at speeds above 37 mph (60 km/h).

The system continuously monitors driver attention and can provide multiple warnings per trip.

The system resets and starts reassessing driving style and steering behavior when the power switch is cycled from the ON to the OFF position and back to the ON position.

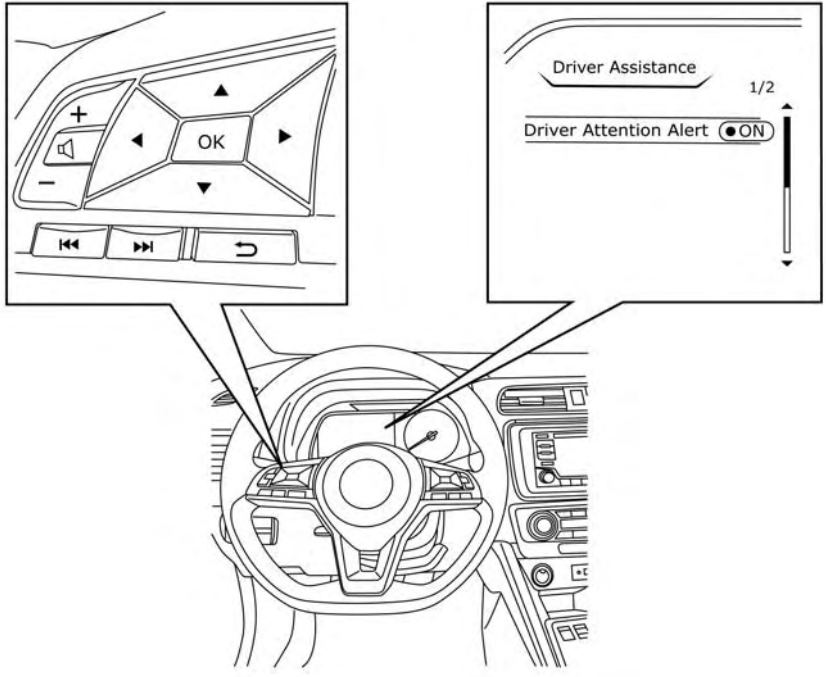

HOW TO ENABLE/DISABLE THE I-DA SYSTEM

Perform the following steps to enable or disable the I-DA system.

1. Press the ◀▶ button until "Settings" displays in the vehicle information display. Use the ▲▼ button to select "Driver Assistance." Then press the OK button.
2. Select "Driver Attention Alert" and use the OK button to turn the system on or off.

NOTE:
The setting will be retained even if the EV system is restarted.

I-DA SYSTEM LIMITATIONS

WARNING

Listed below are the system limitations for the I-DA system. Failure to operate the vehicle in accordance with these system limitations could result in serious injury or death.

- **The I-DA system may not operate properly and may not provide an alert in the following conditions:**
  - **Poor road conditions such as an uneven road surface or pot holes.**
  - **Strong side wind.**

- **If you have adopted a sporty driving style with higher cornering speeds or higher rates of acceleration.**
- **Frequent lane changes or changes to vehicle speed.**

▪ **The I-DA system will not provide an alert in the following conditions:**
- **Vehicle speeds lower than 37 mph (60 km/h).**
- **Short lapses of attention.**
- **Instantaneous distractions such as dropping an object.**

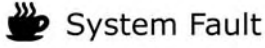

System malfunction

If the Intelligent Driver Alertness system malfunctions, the system warning message will appear in the vehicle information display and the function will be stopped automatically.

Action to take

Stop the vehicle in a safe location, place the vehicle in P (Park) position, turn the EV system off and restart the EV system. If the system warning message continues to appear, have the system checked. It is recommended that you visit a NISSAN certified LEAF dealer for this service.

INCREASING POWER ECONOMY

The vehicle range varies depending upon the following factors:

- Speed
- Vehicle load
- Electrical load from vehicle accessories
- Traffic and road conditions

NISSAN recommends the following driving habits to help maximize vehicle range:

Before driving:

- Follow the recommended periodic maintenance.
- Keep tires inflated to the correct pressure.
- Keep wheels in correct alignment.
- Pre-heat or pre-cool the interior cabin while the vehicle is charging.
- Remove unnecessary cargo from the vehicle.

While driving:

- Drive in ECO mode.
  - The ECO mode helps reduce power consumption by reducing acceleration when compared to the same accelerator pedal position in the D (Drive) position.
- Drive at a constant speed. Maintain cruising speeds with a constant accelerator position or by using cruise control when appropriate.
- Accelerate slowly and smoothly. Gently press and release the accelerator pedal for acceleration and deceleration.
- Drive at moderate speeds on the highway.
- Avoid frequent stopping and braking. Maintain a safe distance behind other vehicles.
- Turn off the air conditioner/heater when it is not necessary.
- Select a moderate temperature setting for heating or cooling to help reduce power consumption.
- Use the air conditioner/heater and close windows to reduce drag when cruising at a highway speed.
- Release the accelerator pedal to slow down and do not apply the brakes when traffic and road conditions allow.
  - This vehicle is equipped with a regenerative brake system. The primary purpose of the regenerative brake system is to provide some power to recharge the Li-ion battery and extend driving range. A secondary benefit is “engine braking” that operates based on Li-ion battery conditions. In the D (Drive) position, when the accelerator pedal is released, the regenerative brake system provides some deceleration and some power to the Li-ion battery.

ECO DRIVE REPORT

The ECO Drive Report appears for approximately 30 seconds after placing the power switch in the OFF position, driving the vehicle for more than 0.3 miles (500 m), and pressing the ▲▼ button on the steering wheel.

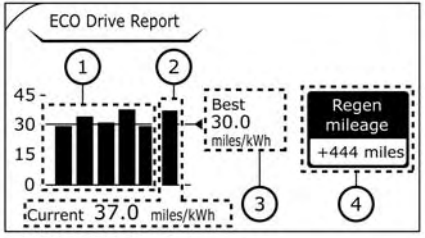

1. Previous 5 times (History)

   Displays the average energy economy for the previous 5 times

2. Current energy economy

   Displays the most recent average energy economy

3. Best energy economy

   Displays the best energy economy of the past history

4. Regenerated energy (mileage)

   Displays the amount of regenerated energy stored in the Li-ion battery in one trip in terms of distance

If the vehicle has been driven mostly on downhill roads, more energy is regenerated. This may cause the regenerated energy (mileage) ④ to show a longer distance than the vehicle was driven or the current energy economy ② to show "99.9 miles/kWh."

When the ▲▼ button is pressed while the ECO Drive Report is shown, the display switches to the timer display. Either display will continue to show for another 30 seconds after the button is pressed. If the doors are locked after placing the power switch in the OFF position, the display turns off before the preset time.

In the "Settings" menu, you can program the ECO Drive Report to not appear when the power switch is placed in the OFF position. For additional information, refer to "Vehicle information display" in the "Instruments and controls" section of this manual.

PARKING/PARKING ON HILLS

WARNING

- **Do not stop or park the vehicle over flammable materials such as dry grass, waste paper or rags. They may ignite and cause a fire.**
- **Never leave the vehicle in the READY to drive mode while the vehicle is unattended.**
- **Do not leave children unattended inside the vehicle. They could unknowingly activate switches or controls. Unattended children could become involved in serious accidents.**
- **Safe parking procedures require that both the parking brake be applied and the vehicle placed in the park position. Failure to do so could cause the vehicle to move unexpectedly or roll away and result in an accident.**
- **To help avoid risk of injury or death through unintended operation of the vehicle and/or its systems, do not leave children, people who require the assistance of others or pets unattended in your vehicle. Additionally, the temperature inside a closed vehicle on a warm day can quickly become high enough to cause a significant risk of injury or death to people and pets.**

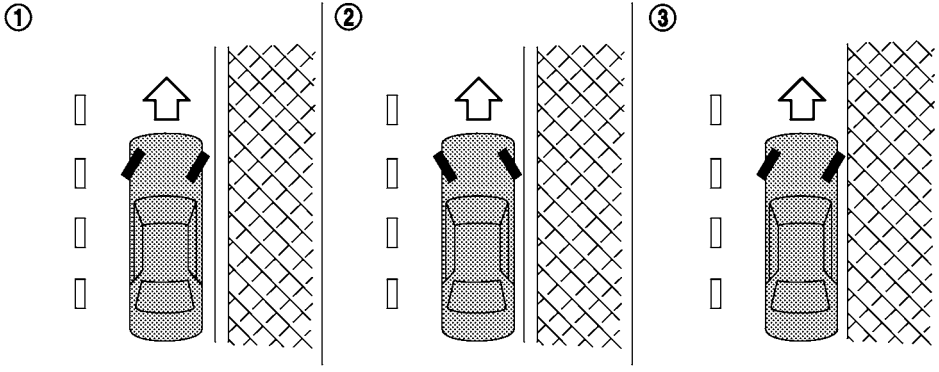

1. Firmly apply the parking brake.
2. Push the P (Park) position switch on the shift lever.
3. To help prevent the vehicle from rolling into the street when parked on a slope, it is a good practice to turn the wheels as illustrated.

HEADED DOWNHILL WITH CURB ①:

Turn the wheels into the curb and move the vehicle forward until the curb side wheel gently touches the curb.

HEADED UPHILL WITH CURB ②:

Turn the wheels away from the curb and move the vehicle back until the curb side wheel gently touches the curb.

HEADED UPHILL OR DOWNHILL, NO CURB ③:

Turn the wheels toward the side of the road so the vehicle will move away from the center of the road if it moves.

4. Place the power switch in the OFF position.

POWER STEERING SYSTEM

WARNING

- **If the READY to drive indicator light is off while driving, the power assist for the steering will not work. Steering will be harder to operate.**
- **When the power steering warning light illuminates while the READY to drive indicator light is on, the power assist for the steering will cease operation. You will still have control of the vehicle but the steering will be harder to operate.**

The power steering system is designed to provide power assistance while driving to operate the steering wheel with less effort.

When the steering wheel is operated repeatedly or continuously while parking or driving at a very low speed, the power assist for the steering wheel will be reduced. This is to prevent overheating of the power steering system and help protect it from getting damaged. When the power assistance is reduced, steering wheel operation will become harder. When the temperature of the power steering system goes down, the power assistance level will return to normal. Avoid repeating such steering

wheel operations that could cause the power steering system to overheat.

You may hear a noise when the steering wheel is operated quickly. However, this is not a malfunction.

If the power steering warning light illuminates while the READY to drive indicator light is on, it may indicate the power steering system is not functioning properly and may need servicing. Have the power steering system checked. It is recommended that you visit a NISSAN certified LEAF dealer for this service. For additional information, refer to "Power steering warning light" in the "Instruments and controls" section of this manual.

The power assist for steering stops operating when both the power steering warning light and READY to drive indicator light are illuminated. You will still have control of the vehicle. However, greater steering effort is needed, especially in sharp turns and at low speeds.

BRAKE SYSTEM

BRAKE PRECAUTIONS

This vehicle is equipped with two braking systems:

1. Hydraulic brake system
2. Regenerative brake system

Hydraulic brake system

The hydraulic brake system is similar to the brakes used on conventional vehicles.

The brake system has two separate hydraulic circuits. If one circuit malfunctions, you will still have braking at two wheels.

Regenerative brake system

The primary purpose of the regenerative brake system is to provide some power to help recharge the Li-ion battery and extend driving range. A secondary benefit is "engine braking" that operates based on battery conditions.

In the D (Drive) range, when the accelerator is released, the regenerative brake system provides some deceleration and generates power for the Li-ion battery. Power is also generated when the brake pedal is applied.

When you put the shift lever in the B mode and take your foot off the accelerator pedal, more regenerative brake is applied than in the D (Drive) position. However, during high-speed driving you may feel that regenerative brake provides less deceleration than the engine braking in an ordinary vehicle. This is normal.

Less deceleration is provided by the regenerative brake system when the Li-ion battery is fully charged. Regenerative brake is automatically reduced when the Li-ion battery is fully charged to prevent the Li-ion battery from becoming overcharged. Regenerative brake is also automatically reduced when the battery temperature is high/low (indicated by the red/blue zones on the battery temperature gauge) to prevent Li-ion battery damage.

The brake pedal should be used to slow or stop the vehicle depending on traffic or road conditions. The vehicle brakes are not affected by regenerative brake system operation.

NOTE:

- **When applying the regenerative brakes, you may hear a sound coming from the regenerative brake system. This is a normal operating characteristic of an EV.**
- **If the power switch position is in a position other than ON or READY to drive, you can stop the vehicle by depressing the brake pedal. However, greater foot pressure on the brake pedal will be required to stop the vehicle, and the stopping distance will be longer.**
- **When depressing the brake pedal, the brake pedal feel will not be smooth or may change when the cooperative regenerative brake system activates. However, the electronically controlled brake system is operating normally and this does not indicate a malfunction.**

Using the brakes

Avoid resting your foot on the brake pedal while driving. This will cause overheating of the brakes, wearing out of the brake pads and shoes faster, and will reduce driving range.

To help reduce brake wear, and to prevent the brakes from overheating, reduce speed and select B mode before going down a slope or long grade. Overheated brakes may reduce braking performance and could result in loss of vehicle control.

WARNING

- **While driving on a slippery surface, be careful when braking or accelerating. Abrupt braking or accelerating could cause the wheels to skid, which could result in an accident.**
- **If the brake pedal is depressed with the EV system OFF, you may feel an increased brake pedal effort and a decreased pedal stroke. If the BRAKE warning light does not illuminate and the brake pedal feels like it has returned to its normal state after the EV system is started, this indicates that there is no malfunction and the vehicle can be operated normally.**

Wet brakes

When the vehicle is washed or driven through water, the brakes may get wet. As a result, the braking distance will be longer and the vehicle may pull to one side during braking.

To dry brakes, drive the vehicle at a safe speed while lightly tapping the brake pedal to heat up the brakes. Do this until the brakes return to normal. Avoid driving the vehicle at high speeds until the brakes have dried.

Parking brake break-in

Break in the parking brake shoes whenever the stopping effect of the parking brake is weakened or whenever the parking brake shoes and/or drums/rotors are replaced, in order to assure the best braking performance.

This procedure is described in the Genuine NISSAN Service Manual, and it can be performed by a certified repair facility. It is recommended that you visit a NISSAN certified LEAF dealer.

ANTI-LOCK BRAKING SYSTEM (ABS)

WARNING

- **The ABS is a sophisticated device, but it cannot prevent accidents resulting from careless or dangerous driving techniques. It can help maintain vehicle control during braking on slippery surfaces. Remember that stopping distances on slippery surfaces will be longer than on normal surfaces even with ABS. Stopping distances may also be longer on rough, gravel or snow covered roads, or if you are using tire chains. Always maintain a safe distance from the vehicle in front of you. Ultimately, the driver is responsible for safety.**
- **Tire type and condition may also affect braking effectiveness.**
  - **When replacing tires, install the specified size of tires on all four wheels.**
  - **For additional information, refer to "Wheels and tires" in the "Maintenance and do-it-yourself" section of this manual.**

The ABS controls the brakes so the wheels do not lock during hard braking or when braking on slippery surfaces. The system detects the rotation speed at each wheel and varies the brake fluid pressure to prevent each wheel from locking and sliding. By preventing each wheel from locking, the system helps the driver maintain steering control and helps to minimize swerving and spinning on slippery surfaces.

Using the system

Depress the brake pedal and hold it down. Depress the brake pedal with firm steady pressure, but do not pump the brakes. The Anti-lock Braking System will operate to prevent the wheels from locking up. Steer the vehicle to avoid obstacles.

WARNING

Do not pump the brake pedal. Doing so may result in increased stopping distances.

Self-test feature

The Anti-lock Braking System (ABS) includes electronic sensors, electric pumps, hydraulic solenoids and a computer. The computer has a built-in diagnostic feature that tests the system each time you push the power switch in the READY to drive position and move the vehicle at a low speed in forward or reverse. When the self-test occurs, you may hear a "clunk" noise and/or feel a pulsation in the brake pedal. This is normal and does not indicate a malfunction. If the computer senses a malfunction, it switches the ABS off and illuminates the ABS warning light on the instrument panel. The brake system then operates normally, but without anti-lock assistance.

If the ABS warning light illuminates during the self-test or while driving, have the vehicle checked. It is recommended that you visit a NISSAN certified LEAF dealer for this service.

Normal operation

The Anti-lock Braking System (ABS) operates at speeds above 3 to 6 mph (5 to 10 km/h). The speed varies according to road conditions.

When the ABS senses that one or more wheels are close to locking up, the actuator

rapidly applies and releases hydraulic pressure. This action is similar to pumping the brakes very quickly. You may feel a pulsation in the brake pedal and hear a noise from under the hood or feel a vibration from the actuator when it is operating. This is normal and indicates that the ABS is operating properly. However, the pulsation may indicate that road conditions are hazardous and extra care is required while driving.

VEHICLE DYNAMIC CONTROL (VDC) SYSTEM

The VDC system uses various sensors to monitor driver inputs and vehicle motion. Under certain driving conditions, the VDC system helps to perform the following functions.

- Controls brake pressure to reduce wheel slip on one slipping drive wheel so power is transferred to a drive wheel on the same axle that is not slipping.
- Controls brake pressure and traction motor output to reduce drive wheel slip based on vehicle speed (traction control function).
- Controls brake pressure at individual wheels and traction motor output to help the driver maintain control of the vehicle in the following conditions:
- Understeer (vehicle tends to not follow the steered path despite increased steering input).
- Oversteer (vehicle tends to spin due to certain road or driving conditions).

The VDC system can help the driver maintain control of the vehicle, but it cannot prevent loss of vehicle control in all driving situations.

When the VDC system operates, the indicator light in the instrument panel flashes. When the indicator light flashes, note the following items:

- The road may be slippery or the system may determine some action is required to help keep the vehicle on the steered path.
- You may feel a pulsation in the brake pedal and hear a noise or vibration from under the hood. This is normal and indicates that the VDC system is working properly.
- Adjust your speed and driving according to the road conditions.

For additional information, refer to "Slip indicator light" and "Vehicle Dynamic Control (VDC) OFF indicator light" in the "Instruments and controls" section of this manual.

If a malfunction occurs in the system, the indicator light illuminates in the vehicle information display. The VDC system automatically turns off when this indicator light is lit.

The vehicle information display is used to turn off the VDC system. The VDC OFF indicator light OFF illuminates to indicate that the VDC system is off. When the vehicle

information display is used to turn off the system, the VDC system still operates to prevent one drive wheel from slipping by transferring power to a non-slipping wheel. The indicator light flashes if this occurs. All other VDC functions are off and the indicator light will not flash. The VDC system is automatically reset to on when the power switch is placed in the OFF position then back to the ON position. For additional information, refer to "Vehicle information display" in the "Instruments and controls" section of this manual.

The computer has a built-in diagnostic feature that tests the system each time you start the EV and move the vehicle forward or in reverse at a slow speed. When the self-test occurs, you may hear a "clunk" noise and/or feel a pulsation in the brake pedal. This is normal and is not an indication of a malfunction.

WARNING

- **The VDC system is designed to help the driver maintain stability but does not prevent accidents due to abrupt steering operation at high speeds or by careless or dangerous driving techniques. Reduce vehicle speed and be especially careful when driving and cornering on slippery surfaces and always drive carefully.**
- **Do not modify the vehicle's suspension. If suspension parts such as shock absorbers, struts, springs, stabilizer bars, bushings and wheels are not NISSAN recommended for your vehicle or are extremely deteriorated the VDC system may not operate properly. This could adversely affect vehicle handling performance, and the indicator light may flash or the OFF indicator light may illuminate.**
- **If brake related parts such as brake pads, rotors and calipers are not NISSAN recommended or are extremely deteriorated, the VDC system may not operate properly and the indicator light may illuminate.**
- **If traction motor control related parts are not NISSAN recommended or are extremely deteriorated, the indicator light may illuminate.**
- **When driving on extremely inclined surfaces such as higher banked corners, the VDC system may not operate properly and the indicator light may illuminate. Do not drive on these types of roads.**
- **When driving on an unstable surface such as a turntable, ferry, elevator or ramp, the indicator light may illuminate. This is not a malfunction. Restart the EV system after driving onto a stable surface.**
- **If wheels or tires other than the NISSAN recommended ones are used, the VDC system may not operate properly and the OFF indicator light may illuminate.**
- **The VDC system is not a substitute for winter tires or tire chains on a snow covered road.**

CHASSIS CONTROL

The chassis control is an electric control module that includes the following functions:

- Intelligent Trace Control

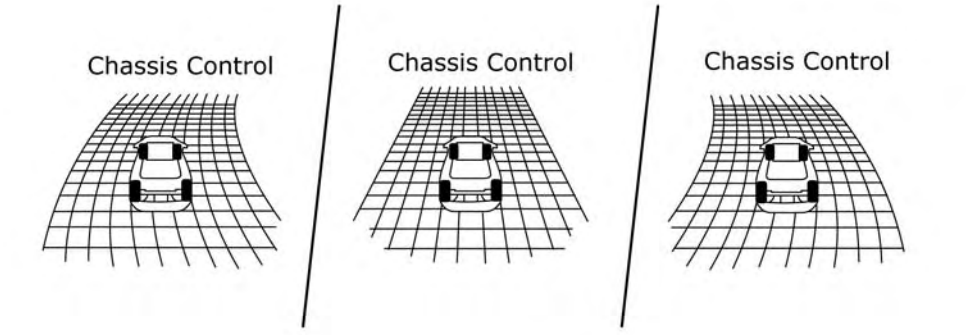

INTELLIGENT TRACE CONTROL (I-TC)

This system senses driving based on the driver's steering and acceleration/braking patterns, and controls brake pressure at individual wheels to aid tracing at corners and help smooth vehicle response.

The I-TC can be set to on (enabled) or off (disabled) through the vehicle information display "Settings" page. For additional information, refer to "Vehicle information display" in the "Instruments and controls" section of this manual.

When the Vehicle Dynamic Control (VDC) OFF switch is used to turn off the VDC system, the I-TC is also turned off.

When the I-TC is operated and the "Chassis Control" mode is selected in the vehicle information display, the I-TC graphics are shown in the vehicle information display. For additional information, refer to "Vehicle information display" in the "Instruments and controls" section of this manual.

If the "Chassis Control System Error: See Owner's Manual" warning message appears in the vehicle information display, it

may indicate that the I-TC is not functioning properly. Have the system checked as soon as possible. It is recommended that you visit a NISSAN certified LEAF dealer for this service.

WARNING

The I-TC may not be effective depending on the driving condition. Always drive carefully and attentively.

When the I-TC is operating, you may feel a pulsation in the brake pedal and hear a noise. This is normal and indicates that the I-TC is operating properly.

Even if the I-TC is turned off, some functions will remain on to assist the driver (for example, avoidance scenes).

HILL START ASSIST SYSTEM

WARNING

- **Never rely solely on the hill start assist system to prevent the vehicle from moving backward on a hill. Always drive carefully and attentively. Depress the brake pedal when the vehicle is stopped on a steep hill. Be especially careful when stopped on a hill on frozen or muddy roads. Failure to prevent the vehicle from rolling backwards may result in a loss of control of the vehicle and possible serious injury or death.**
- **The hill start assist system is not designed to hold the vehicle at a standstill on a hill. Depress the brake pedal when the vehicle is stopped on a steep hill. Failure to do so may cause the vehicle to roll backwards and may result in a collision or serious personal injury.**
- **The hill start assist may not prevent the vehicle from rolling backwards on a hill under all load or road conditions. Always be prepared to depress the brake pedal to prevent the vehicle from rolling backwards. Failure to do so may result in a collision or serious personal injury.**

The hill start assist system automatically keeps the brakes applied to help prevent the vehicle from rolling backwards in the time it takes the driver to release the brake pedal and apply the accelerator when the vehicle is stopped on a hill.

Hill start assist will operate automatically under the following conditions:

- The shift lever is placed in the D (Drive), B mode, or R (Reverse) position.
- The vehicle is stopped completely on a hill by applying the brake.

The maximum holding time is 2 seconds. After 2 seconds the vehicle will begin to roll back and hill start assist will stop operating completely.

Hill start assist will not operate when the shift lever is placed in the N (Neutral) or P (Park) position or on a flat and level road.

COLD WEATHER DRIVING

CAUTION

To prevent damage to the Li-ion battery: Do not store the vehicle in temperatures below -13˚F (-25˚C) for over seven days. If the outside temperature is -13˚F (-25˚C) or less, the Li-ion battery may freeze and it cannot be charged or provide power to run the vehicle. Move the vehicle to a warm location.

NOTE:

- **Connect the charger to the vehicle and place the power switch in the OFF position when parking the vehicle if temperatures may go below -4˚F (-20˚C). This provides external power to the Li-ion battery warmer (if so equipped) when it operates and does not discharge the Li-ion battery. Vehicle driving range is reduced if the Li-ion battery warmer (if so equipped) operates (Li-ion battery temperature approximately -4˚F (-20˚C) or colder) while driving the vehicle. You may need to charge the Li-ion battery sooner than in warmer temperatures.**
- **The Li-ion battery requires more time to charge when the Li-ion battery warmer (if so equipped) operates.**
- **The predicted charging time displayed on the meter and navigation system increases when the Li-ion battery warmer (if so equipped) operates.**
- **Vehicle range may be substantially reduced in extremely cold conditions (for example under -4˚F (-20˚C)).**
- **Using the climate control system to heat the cabin when outside temperature is below 32˚F (0˚C) uses more electricity and affects vehicle range more than when using the heater when the temperature is above 32˚F (0˚C).**
- **Climate control performance is reduced when using the Climate Ctrl. Timer or Remote Climate Control while the Li-ion battery warmer (if so equipped) operates. Set only the charging timer [End Time] when charging in cold weather. The vehicle automatically determines when to start charging to fully charge the Li-ion battery, even if the Li-ion battery warmer operates. Charging ends before the set end time if the Li-ion battery is fully charged.**

FREEING A FROZEN DOOR LOCK

To prevent a door lock from freezing, apply deicer through the key hole. If the lock becomes frozen, heat the key before inserting it into the key hole or use the remote keyless entry key fob.

ANTIFREEZE

In the winter when it is possible that the outside temperature will drop below 32˚F (0˚C), check the antifreeze to ensure proper winter protection. For additional information, refer to "Cooling system" in the "Maintenance and do-it-yourself" section of this manual.

12-VOLT BATTERY

If the 12-volt battery is not fully charged during extremely cold weather conditions, the 12-volt battery fluid may freeze and damage the 12-volt battery. To maintain maximum efficiency, the 12-volt battery should be checked regularly. For additional information, refer to "12-volt battery" in the

"Maintenance and do-it-yourself" section of this manual.

DRAINING OF COOLANT WATER

If the vehicle is to be left outside without antifreeze, drain the cooling system. Refill before operating the vehicle. For additional information, refer to "Cooling system" in the "Maintenance and do-it-yourself" section of this manual.

TIRE EQUIPMENT

SUMMER tires have a tread designed to provide superior performance on dry pavement. However, the performance of these tires will be substantially reduced in snowy and icy conditions. If you operate your vehicle on snowy or icy roads, NISSAN recommends the use of MUD & SNOW or ALL SEASON tires on all four wheels. It is recommended that you visit a NISSAN certified LEAF dealer for the tire type, size, speed rating and availability information.

For additional traction on icy roads, studded tires may be used. However, some U.S. states and Canadian provinces prohibit their use. Check local, state and provincial laws before installing studded tires.

Skid and traction capabilities of studded snow tires, on wet or dry surfaces, may be poorer than that of non-studded snow tires.

Tire chains may be used. For additional information, refer to "Tire chains" in the "Maintenance and do-it-yourself" section of this manual.

SPECIAL WINTER EQUIPMENT

It is recommended that the following items be carried in the vehicle during winter:

- A scraper and stiff-bristled brush to remove ice and snow from the windows and wiper blades.
- A shovel to dig the vehicle out of snow-drifts.
- Extra windshield-washer fluid to refill the reservoir tank.

DRIVING ON SNOW OR ICE

WARNING

- **Wet ice (32°F, 0°C and freezing rain), very cold snow or ice can be slick and very hard to drive on. The vehicle will have much less traction or "grip" under these conditions. Try to avoid driving on wet ice until the road is salted or sanded.**
- **Whatever the conditions, drive with caution. Accelerate and slow down with care. If accelerating too fast, the drive wheels will lose even more traction.**
- **Allow more stopping distance under these conditions. Braking should be started sooner than on dry pavement.**
- **Allow greater following distances on slippery roads.**
- **Watch for slippery spots (glare ice). These may appear on an otherwise clear road in shaded areas. If a patch of ice is seen ahead, brake before reaching it. Try not to brake while on the ice, and avoid any sudden steering maneuvers.**
- **Do not use cruise control on slippery roads.**

FREEING A FROZEN CHARGE PORT LID

When the charge port is frozen, melt the ice using a hair dryer.

PARKING BRAKE

CAUTION

When parking in an area where the outside temperature is below 32°F (0°C), do not apply the parking brake to prevent it from freezing.
For safe parking, place the shift lever in the P (Park) position and securely block the wheels.

NOTES

6 In case of emergency

Hazard warning flasher switch 6-2
Roadside assistance program 6-2
Emergency EV (Electric Vehicle) shut off 6-3
Flat tire 6-3
Tire Pressure Monitoring System (TPMS). 6-3
Repairing flat tire 6-4
Jump starting 6-10
If the Li-ion battery becomes completely discharged 6-13
Push starting 6-14
Towing your vehicle. 6-14
Towing recommended by NISSAN 6-15
Vehicle recovery (freeing a stuck vehicle). . . .6-15

HAZARD WARNING FLASHER SWITCH

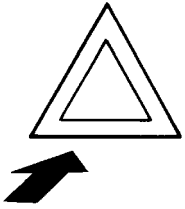

Push the switch on to warn other drivers when you must stop or park under emergency conditions. All turn signal lights will flash.

WARNING

- **If stopping for an emergency, be sure to move the vehicle well off the road.**
- **Do not use the hazard warning flashers while moving on the highway unless unusual circumstances force you to drive so slowly that your vehicle might become a hazard to other traffic.**
- **Turn signals do not work when the hazard warning flasher lights are on.**

The flasher can be actuated with the power switch in any position.

Some jurisdictions may prohibit the use of the hazard warning flasher switch while driving.

ROADSIDE ASSISTANCE PROGRAM

In the event of a roadside emergency, Roadside Assistance Service is available to you. For additional information, please refer to your Warranty Information Booklet (U.S.) or Warranty & Roadside Assistance Information Booklet (Canada) for details.

EMERGENCY EV (ELECTRIC VEHICLE) SHUT OFF

To shut off the EV system in an emergency situation while driving, perform the following procedure.

- Rapidly push the power switch three consecutive times in less than 1.5 seconds, or
- Push and hold the power switch for more than 2 seconds.

FLAT TIRE

TIRE PRESSURE MONITORING SYSTEM (TPMS)

This vehicle is equipped with TPMS. It monitors tire pressure of all tires. When the low tire pressure warning light is lit, and the "Tire Pressure Low — Add Air" warning appears on the vehicle information display, one or more of your tires is significantly underinflated. If the vehicle is being driven with low tire pressure, the TPMS will activate and warn you of it by the low tire pressure warning light. This system will activate only when the vehicle is driven at speeds above 16 mph (25 km/h). For additional information, refer to "Warning lights, indicator lights and audible reminders" in the "Instruments and controls" section and "Tire Pressure Monitoring System (TPMS)" in the "Starting and driving" section of this manual.

WARNING

- **Radio waves could adversely affect electric medical equipment. Those who use a pacemaker should contact the electric medical equipment manufacturer for the possible influences before use.**
- **If the low tire pressure warning light illuminates while driving, avoid sudden steering maneuvers or abrupt braking, reduce vehicle speed, pull off the road to a safe location and stop the vehicle as soon as possible. Driving with underinflated tires may permanently damage the tires and increase the likelihood of tire failure. Serious vehicle damage could occur and may lead to an accident and could result in serious personal injury. Check the tire pressure for all four tires. Adjust the tire pressure to the recommended COLD tire pressure shown on the Tire and Loading Information label to turn the low tire pressure warning light OFF. If the light still illuminates while driving after adjusting the tire pressure, a tire may be flat. If you have a flat tire, repair it as soon as possible.**
- **When replacing a wheel without the TPMS such as the spare tire, TPMS will not function and the low tire pressure warning light will flash for approximately 1 minute. The light will remain on after 1 minute. Have your tires replaced and/or TPMS system reset as soon as possible. It**

is recommended that you visit a NISSAN certified LEAF dealer for these services.

- **Replacing tires with those not originally specified by NISSAN could affect the proper operation of the TPMS.**
- **The Genuine NISSAN Emergency Tire Repair Sealant or equivalent can be used for temporarily repairing a tire. Do not inject any other tire liquid or aerosol tire sealant into the tires, as this may cause a malfunction of tire pressure sensors.**
- **NISSAN recommends using only NISSAN Genuine Emergency Tire Sealant provided with your vehicle. Other tire sealants may damage the valve stem seal which can cause the tire to lose air pressure. It is recommended that you visit a NISSAN certified LEAF dealer as soon as possible after using tire repair sealant (for models equipped with the emergency tire puncture repair kit).**

REPAIRING FLAT TIRE

WARNING

- **After using Emergency Tire Sealant to repair a minor tire puncture, do not drive the vehicle at speeds faster than 50 mph (80 km/h).**
- **Immediately after using the Emergency Tire Sealant to repair a minor tire puncture, it is recommended that you visit a NISSAN certified LEAF dealer. The Emergency Tire Sealant cannot permanently seal a punctured tire. Continuing operation of the vehicle without a permanent tire repair can lead to a crash.**
- **If you used the Emergency Tire Sealant to repair a minor tire puncture, it is recommended that you visit a NISSAN certified LEAF dealer to replace the TPMS sensor in addition to repairing or replacing the tire.**
- **NISSAN recommends using only NISSAN Genuine Emergency Tire Sealant provided with your vehicle. Other tire sealants may damage the valve stem seal which can cause the tire to lose air pressure.**

This vehicle does not have a spare tire. The emergency tire puncture repair kit (Emergency Tire Sealant) is supplied with the vehicle instead of a spare tire. It can be used to temporarily repair minor tire punctures.

If possible, have the vehicle towed to a facility that can repair or replace the flat tire. Using the emergency tire puncture repair kit may cause a malfunction of the tire pressure sensor and cause the low tire pressure warning light to illuminate.

CAUTION

- **To avoid the emergency tire puncture kit being damaged during storage or use:**
  - **Only use the emergency tire puncture repair kit on your vehicle. Do not use it on other vehicles.**

- **Only use the kit to inflate the tires of your vehicle and to check the vehicle's tire pressure.**
- **Only plug the compressor into a 12-volt DC car power point.**
- **Keep the kit free of water and dirt.**
- **Do not disassemble or modify the kit.**
- **Do not drop the kit or allow hard impacts to the kit.**

▪ **Do not use the emergency tire puncture repair kit under the following conditions. It is recommended that you visit a NISSAN certified LEAF dealer or professional road assistance.**
- **when the sealant has passed its expiration date (shown on the label attached to the bottle)**
- **when the cut or the puncture is approximately 0.25 in (6 mm) or longer**
- **when the tire sidewall is damaged**
- **when the vehicle has been driven with extremely low tire pressure**
- **when the tire has come off the inside or the outside of the wheel**
- **when the tire wheel is damaged**
- **when two or more tires are flat**

If you have a flat tire, follow the instructions below.

Stopping the vehicle

1. Safely move the vehicle off the road and away from traffic.
2. Turn on the hazard warning flashers.
3. Park on a level surface and apply the parking brake.
4. Push the P (Park) position switch on the shift lever to the P (Park) position.
5. Turn off the EV system.
6. Raise the hood to warn other traffic and to signal professional road assistance personnel that you need assistance.
7. Have all passengers get out of the vehicle and stand in a safe place, away from traffic and clear of the vehicle.

WARNING

- **Make sure the parking brake is securely applied and the vehicle is placed into the P (Park) position.**
- **Never repair tires when the vehicle is on a slope, ice or slippery areas. This is hazardous.**
- **Never repair tires if oncoming traffic is close to your vehicle. Wait for professional road assistance.**

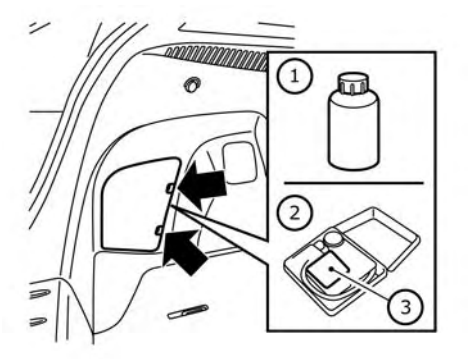

Getting emergency tire puncture repair kit

Take out the emergency tire puncture repair kit located in the cargo area. The repair kit consists of the following items:

① Tire sealant bottle
② Air compressor*
③ Speed restriction sticker

* The compressor shape may differ depending on the models.

Before using emergency tire puncture repair kit

- If any foreign object (for example, a screw or nail) is embedded in the tire, do not remove it.
- Check the expiration date of the sealant (shown on the label attached to the bottle). Never use a sealant whose expiration date has passed.

Repairing tire:

WARNING

Observe the following precautions when using the tire repair compound.

- **Swallowing the compound is dangerous. Immediately drink as much water as possible and seek prompt medical assistance.**
- **Rinse well with lots of water if the compound comes into contact with skin or eyes. If irritation persists, seek prompt medical attention.**
- **Keep the repair compound out of the reach of children.**
- **The emergency repair compound may cause a malfunction of the tire pressure sensors and cause the low tire pressure warning light to illuminate. Have the tire pressure sensor replaced as soon as possible.**

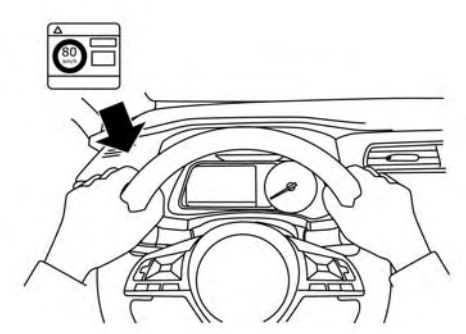

1. Take out the speed restriction sticker from the air compressor, then put it in a location where the driver can see it while driving.

CAUTION

Do not put the speed restriction label on the steering wheel pad, the speedometer or the warning light locations.

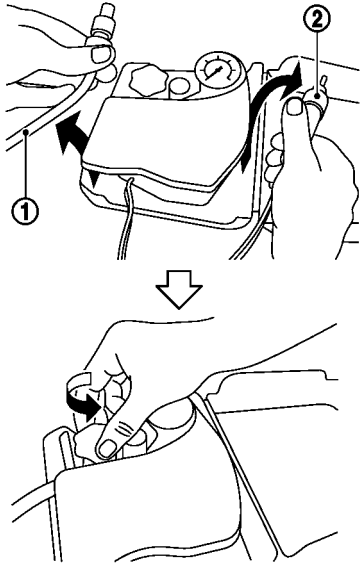

2. Take the hose ① and the power plug ② out of the air compressor. Remove the cap of the bottle holder from the air compressor.

3. Remove the cap from the tire sealant bottle. Leave the bottle seal intact. Screw the bottle clockwise into the bottle holder to pierce the seal of the bottle.

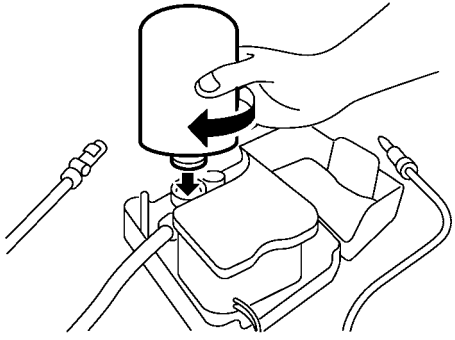

4. Remove the cap from the tire valve on the flat tire.

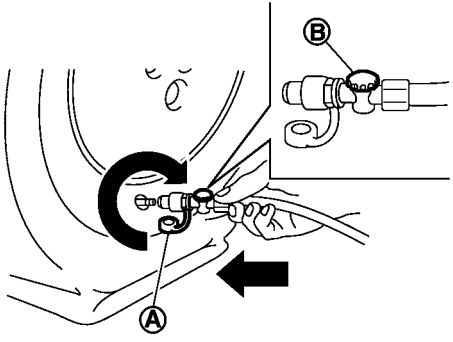

5. Remove the protective cap Ⓐ of the hose and screw the hose securely onto the tire valve. Make sure that the pressure release valve Ⓑ is securely tightened. Make sure that the air compressor switch is in the OFF (O) position, and then insert the power plug into the power outlet in the vehicle.

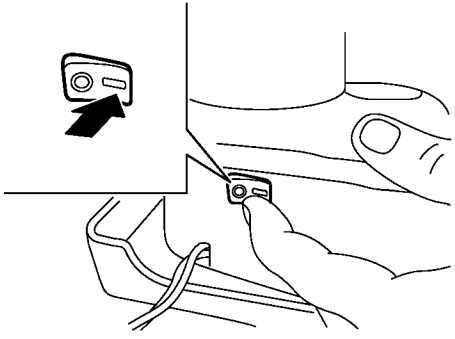

6. Push the power switch to the ACC position. Then turn the compressor switch to the ON (–) position and inflate the tire up to the pressure that is specified on the Tire and Loading Information label affixed to the driver's side center pillar if possible, or to the minimum of 26 psi (180 kPa). Turn the air compressor off briefly in order to check the tire pressure with the pressure gauge.

If the tire is inflated to higher than the specified pressure, lower the tire pressure by releasing air with the pressure release valve.

NOTE:
The compressor tire pressure gauge may show a pressure reading of 87 psi (600 kPa) for about 30 seconds while inflating the tire. The pressure gauge is indicating the pressure inside the sealant can. When the sealant has been injected into the tire the pressure gauge will drop and indicate actual tire pressure.

WARNING

To avoid serious personal injury while using the emergency tire puncture repair kit:

- **Securely tighten the compressor hose to the tire valve. Failure to do so can cause the sealant to spray into the air and get into your eyes or on the skin.**
- **Do not stand directly beside the damaged tire while it is being inflated because of the risk of the rupture. If there are any cracks or bumps, turn the compressor off immediately.**

If the tire pressure does not increase to **26 psi (180 kPa) within 10 minutes**, the tire may be seriously damaged and **the tire cannot be repaired with this tire repair kit.** It is recommended that you visit a NISSAN certified LEAF dealer.

7. When the tire pressure is at the specified amount, turn the air compressor off. If the tire cannot be inflated to the specified amount, the air compressor can be turned off at the minimum of 26 psi (180 kPa). Remove the power plug from the power outlet and quickly remove the hose from the tire valve. Attach the protective cap and valve cap. Properly stow the emergency tire puncture repair kit in the cargo area.

CAUTION

To avoid serious personal injury when stowing the emergency tire puncture repair kit:

- **Keep the sealant bottle screwed into the compressor. Failure to do so can cause the sealant to spray into the air and get into your eyes or on the skin.**

8. Immediately drive the vehicle for 10 minutes or 2 miles (3 km) at a speed below 50 mph (80 km/h).
9. After driving, make sure that the air compressor switch is in the OFF position, then screw the hose securely onto the tire valve. Check the tire pressure with the pressure gauge. Temporary repair is completed if the tire pressure does not drop.

   Make sure the pressure is adjusted to the pressure that is specified on the Tire and Loading Information label before driving.

10. If the tire pressure drops, repeat the steps from 5 to 9. If the pressure drops again or under 19 psi (130 kPa), **the tire cannot be repaired with this tire repair kit**. If the tire cannot be repaired, the driver should not drive on it any further. The car should be towed to the nearest dealership.

The sealant bottle and hose cannot be reused to repair another punctured tire. It is recommended that you visit a NISSAN certified LEAF dealer to purchase replacements.

After repairing tire:

It is recommended that you visit a NISSAN certified LEAF dealer for tire repair/replacement as soon as possible.

WARNING

- **After using Emergency Tire Sealant to repair a minor tire puncture, do not drive the vehicle at speeds faster than 50 mph (80 km/h).**
- **Immediately after using Emergency Tire Sealant to repair a minor tire puncture, it is recommended that you visit a NISSAN certified LEAF dealer. The Emergency Tire Sealant cannot permanently seal a punctured tire. Continuing operation of the vehicle without a permanent tire repair can lead to a crash.**
- **Do not inject any tire liquid or aerosol tire sealant into the tires, as this may cause a malfunction of the tire pressure sensors.**
- **If you used the Emergency Tire Sealant to repair a minor tire puncture, it is recommended that you visit a NISSAN certified LEAF dealer to replace the TPMS sensor in addition to repairing or replacing the tire.**
- **NISSAN recommends using only NISSAN Genuine Emergency Tire Sealant provided with your vehicle. Other tire sealants may damage the valve stem seal which can cause the tire to lose air pressure.**

JUMP STARTING

To start your EV system with a booster battery, the instructions and precautions below must be followed.

Jump starting provides power to the 12-volt system to allow the electrical systems to operate. The electrical systems must be operating to allow the Li-ion battery to be charged. Jump starting does not charge the Li-ion battery. The Li-ion battery must be charged before the vehicle can be driven.

WARNING

- **If done incorrectly, jump starting can lead to a 12-volt battery explosion, resulting in severe injury or death. It could also damage your vehicle.**
- **Explosive hydrogen gas is always present in the vicinity of the 12-volt battery. Keep all sparks and flames away from the 12-volt battery.**
- **Do not allow battery fluid to come into contact with eyes, skin, clothing or painted surfaces. Battery fluid is a corrosive sulfuric acid solution that can cause severe burns. If the fluid comes into contact with anything,**

immediately flush the contacted area with water.

- Keep the 12-volt battery out of the reach of children.
- The booster battery must be rated at 12 volt. Use of an improperly rated battery can damage your vehicle.
- Whenever working on or near a 12-volt battery, always wear suitable eye protectors (for example, goggles or industrial safety spectacles) and remove rings, metal bands, or any other jewelry. Do not lean over the 12-volt battery when jump starting.
- Do not attempt to jump start a frozen battery. It could explode and cause serious injury.
- Your vehicle has an automatic cooling fan. It could come on at any time. Keep hands and other objects away from it.

WARNING

- Always follow the instructions below. Failure to do so could result in damage to the DC/DC converter and cause personal injury.
- Do not attempt to perform a jump start on the 12-volt battery at the same time that the Li-ion battery is being charged. Doing so may damage the vehicle or charging equipment and could cause an injury.

CAUTION

LEAF cannot be used as a booster vehicle because it cannot supply enough power to start a gasoline engine. However, a gasoline engine vehicle can be used to jump start LEAF's 12-volt battery.

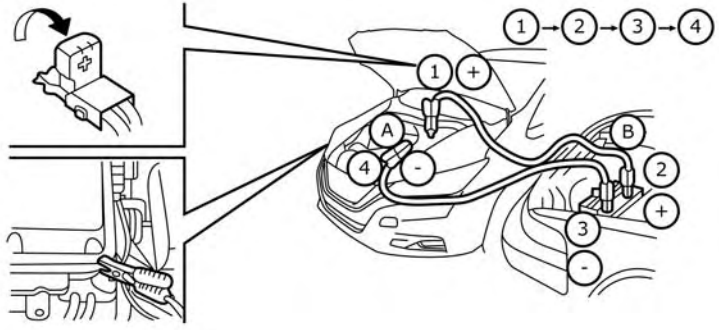

1. If the booster battery is in another vehicle Ⓑ, position the two vehicles (Ⓐ and Ⓑ) to bring their 12-volt batteries into close proximity to each other.

   Do not allow the two vehicles to touch.

2. Apply the parking brake.

   If the 12-volt battery is discharged, the power switch cannot be moved from the OFF position. Connect the jumper cables to the booster vehicle Ⓑ before pushing the power switch.

3. Push the P (Park) position switch to place the vehicle in the P (Park) position.
4. Switch off all unnecessary electrical systems (headlights, heater, air conditioner, etc.).
5. Place the power switch in the OFF position.
6. Ensure vent caps are level and tight.
7. Connect jumper cables in the sequence as illustrated (① → ② → ③ → ④).

CAUTION

- **Always connect positive (+) to positive (+) and negative (–) to body ground (for example, as illustrated), not to the 12-volt battery.**
- **Make sure the jumper cables do not touch moving parts in the motor compartment and that the cable clamps do not contact any other metal.**

8. Start the engine of the booster vehicle Ⓑ.
9. While the booster vehicle Ⓑ engine is running, place the EV system in the READY to drive position.

CAUTION

If the system does not start right away, push the power switch to the OFF position and wait 10 seconds before trying again.

10. After starting your EV system, carefully disconnect the negative cable and then the positive cable (④ → ③ → ② → ①) and keep in the READY to drive position over 20 minutes to charge the 12-volt battery.

11. If necessary, connect the vehicle to a charging station or EVSE (Electric Vehicle Supply Equipment) to charge the Li-ion battery. For additional information, refer to the "Charging" section. The vehicle cannot be driven until the Li-ion battery is charged.

NOTE:
If it is not possible to turn the system ON by following this procedure, it is recommended that you visit a NISSAN certified LEAF dealer immediately.

IF THE LI-ION BATTERY BECOMES COMPLETELY DISCHARGED

If the power limitation indicator light illuminates, the traction motor output is limited resulting in reduced vehicle speed. Stop the vehicle in a safe location before the Li-ion battery becomes completely discharged and no power is available to drive the vehicle. Contact Roadside assistance; refer to a NISSAN Warranty Information Booklet.

If possible, place the power switch in the OFF position while waiting for assistance to prevent discharging the 12-volt battery.

NOTE:
If the Li-ion battery becomes completely discharged:

- **The vehicle is automatically placed in the ON position and it will not be possible to switch to the READY to drive position.**
- **The vehicle is automatically switched to the N (Neutral) position and it will not be possible to drive the vehicle.**

WARNING

If the vehicle is in the N (Neutral) position and the Li-ion battery and the 12-volt battery become completely discharged, the vehicle cannot be placed in the P (Park) position. If this occurs, place suitable blocks at both the front and back of a wheel to prevent the vehicle from moving. Failure to block a wheel may allow the vehicle to move unexpectedly which may result in serious personal injury or death.

To place the vehicle in the READY to drive position so the vehicle can be driven, charge the Li-ion battery until the driving range on the instrument panel changes from "---" to a numeric distance.

NOTE:

- **Some vibration may occur when the vehicle is stopped in case the Li-ion battery becomes completely discharged. This is not the malfunction of the system.**
- **If the Li-ion battery is completely discharged, it is required to charge until the low battery charge warning light turns off (white) from on (yellow).**

PUSH STARTING

Do not attempt to start the system by pushing the vehicle.

CAUTION

An EV cannot be push-started or tow-started. Attempting to do so may cause traction motor damage.

TOWING YOUR VEHICLE

When towing your vehicle, all State (Provincial in Canada) and local regulations for towing must be followed. Incorrect towing equipment could damage your vehicle. Towing instructions are available from a NISSAN certified LEAF dealer. Local service operators are familiar with the applicable laws and procedures for towing. To assure proper towing and to prevent accidental damage to your vehicle, NISSAN recommends that you have a service operator tow your vehicle. It is advisable to have the service operator carefully read the following precautions.

WARNING

- **Never ride in a vehicle that is being towed.**
- **Never get under your vehicle after it has been lifted by a tow truck.**

CAUTION

- **When towing, make sure that the axles, steering system and power train are in working condition. If any unit is damaged, dollies must be used.**
- **Always attach safety chains before towing.**

For additional information about towing your vehicle behind a Recreational Vehicle (RV), refer to "Flat towing" in the "Technical and consumer information" section of this manual.

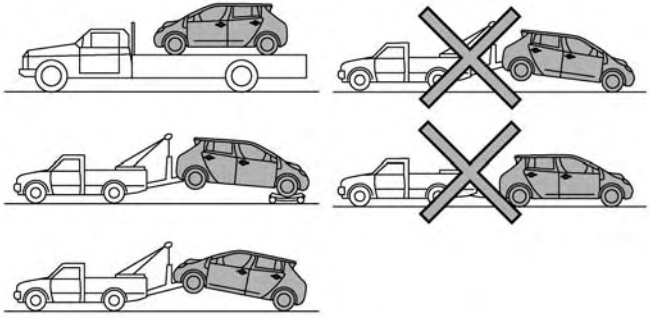

TOWING RECOMMENDED BY NISSAN

NISSAN recommends that your vehicle be towed with the driving (front) wheels off the ground or that the vehicle be placed on a flatbed truck as illustrated.

CAUTION

- **Never tow with the front wheels on the ground or four wheels on the ground (forward or backward), as this may cause serious and expensive damage to the motor.**
- **When towing this vehicle with the rear wheels on the ground (if you do not use towing dollies): Always release the parking brake.**

NOTE:

If your vehicle cannot be moved because the vehicle cannot be shifted to the N (Neutral) position, please refer to the LEAF Roadside Assistance Guide which is located at www.NISSANUSA.com. If your vehicle cannot be moved because the parking brake cannot be released, refer to "Parking brake" in the "Starting and driving" section of this manual.

VEHICLE RECOVERY (FREEING A STUCK VEHICLE)

WARNING

To avoid vehicle damage, serious personal injury or death when recovering a stuck vehicle:

- **Contact a professional towing service to recover the vehicle if you have any questions regarding the recovery procedure.**
- **Tow chains or cables must be attached only to main structural members of the vehicle.**
- **Do not use the vehicle tie-downs to tow or free a stuck vehicle.**
- **Only use devices specifically designed for vehicle recovery and follow the manufacturer's instructions.**
- **Always pull the recovery device straight out from the front of the vehicle. Never pull at an angle.**
- **Route recovery devices so they do not touch any part of the vehicle except the attachment point.**

If your vehicle is stuck in sand, snow, mud, etc., use a tow strap or other device designed specifically for vehicle recovery. Always follow the manufacturer's instructions for the recovery device.

Rocking a stuck vehicle

If the vehicle is stuck in sand, snow, mud, etc., try to free it by following the procedure below.

1. Turn off the Vehicle Dynamic Control (VDC) system.
2. Make sure the area in front and behind the vehicle is clear of obstructions.
3. Turn the steering wheel left and right to clear an area around the front tires.
4. Slowly rock the vehicle forward and backward.
   - Shift back and forth between the R (Reverse) and D (Drive) positions.
   - Apply the accelerator as little as possible to maintain the rocking motion.
   - Release the accelerator pedal before shifting between R (Reverse) and D (Drive).
   - Do not spin the tires above 35 mph (55 km/h).
5. If the vehicle cannot be freed after a few tries, contact a professional towing service to remove the vehicle.

7 Appearance and care

Cleaning exterior 7-2
Washing 7-2
Waxing 7-2
Removing spots 7-3
Underbody 7-3
Glass 7-3
Wheels 7-3
Chrome parts 7-4
Tire dressing 7-4
Cleaning interior 7-4
Air fresheners 7-5
Floor mats 7-5
Seat belts 7-7
Corrosion protection 7-7
Most common factors contributing to vehicle corrosion 7-7
Environmental factors influence the rate of corrosion 7-7
Protect your vehicle from corrosion 7-7

CLEANING EXTERIOR

In order to maintain the appearance of your vehicle, it is important to take proper care of it.

To protect the paint surfaces, wash your vehicle as soon as you can:

- After a rainfall to prevent possible damage from acid rain.
- After driving on coastal roads.
- When contaminants such as soot, bird droppings, tree sap, metal particles or bugs get on the paint surface.
- When dust or mud builds up on the surface.

Whenever possible, store or park your vehicle inside a garage or in a covered area.

When it is necessary to park outside, park in a shady area or protect the vehicle with a body cover.

Be careful not to scratch the paint surface when putting on or removing the body cover.

WASHING

Wash dirt off the vehicle with a wet sponge and plenty of water. Clean the vehicle thoroughly using a mild soap, a special vehicle soap or general purpose dishwashing liquid mixed with clean, lukewarm (never hot) water.

CAUTION

- **Do not use car washes that use acid in the detergent. Some car washes, especially brushless ones, use some acid for cleaning. The acid may react with some plastic vehicle components, causing them to crack. This could affect their appearance, and also could cause them not to function properly. Always check with your car wash to confirm that acid is not used.**
- **Do not wash the vehicle with strong household soap, strong chemical detergents, gasoline or solvents.**
- **Do not wash the vehicle in direct sunlight or while the vehicle body is hot, as the surface may become water-spotted.**
- **Avoid using tight-napped or rough cloths, such as washing mitts. Care must be taken when removing caked-on dirt or other foreign substances so the paint surface is not scratched or damaged.**

Rinse the vehicle thoroughly with plenty of clean water.

Inside flanges, seams and folds on the doors, hatches and hood are particularly vulnerable to the effects of road salt. Therefore, these areas must be regularly cleaned. Make sure that the drain holes in the lower edge of the door are open. Spray water under the body and in the wheel wells to loosen the dirt and wash away road salt.

Avoid leaving water spots on the paint surface by using a damp chamois to dry the vehicle.

WAXING

Regular waxing protects the paint surface and helps retain new vehicle appearance. Polishing is recommended to remove built-up wax residue and to avoid a weathered appearance before reapplying wax.

A NISSAN certified LEAF dealer can assist you in choosing the proper product.

- Wax your vehicle only after a thorough washing. Follow the instructions supplied with the wax.

- Do not use a wax containing any abrasives, cutting compounds or cleaners that may damage the vehicle finish.

Machine compound or aggressive polishing on a base coat/clear coat paint finish may dull the finish or leave swirl marks.

REMOVING SPOTS

Remove tar and oil spots, industrial dust, insects, and tree sap as quickly as possible from the paint surface to avoid lasting damage or staining. Special cleaning products are available at a NISSAN certified LEAF dealer or any automotive accessory stores.

UNDERBODY

In areas where road salt is used in winter, the underbody must be cleaned regularly. This will prevent dirt and salt from building up and causing the acceleration of corrosion on the underbody and suspension. Before the winter period and again in the spring, the underseal must be checked and, if necessary, re-treated.

GLASS

Use glass cleaner to remove smoke and dust film from the glass surfaces. It is normal for glass to become coated with a film after the vehicle is parked in the hot sun. Glass cleaner and a soft cloth will easily remove this film.

CAUTION

When cleaning the inside of the windows, do not use sharp-edged tools, abrasive cleaners or chlorine-based disinfectant cleaners. They could damage the electrical conductors, radio antenna elements or rear window defroster elements.

WHEELS

Wash the wheels when washing the vehicle to maintain their appearance.

- Clean the inner side of the wheels when the wheel is changed or the underside of the vehicle is washed.
- Inspect wheel rims regularly for dents or corrosion. Such damage may cause loss of pressure or poor seal at the tire bead.
- NISSAN recommends that the road wheels be waxed to protect against road salt in areas where it is used during winter.

CAUTION

Do not use abrasive cleaners when washing the wheels.

Aluminum alloy wheels (if so equipped)

Wash regularly with a sponge dampened in a mild soap solution, especially during winter months in areas where road salt is used. Salt could discolor the wheels if not removed.

CAUTION

Follow the directions below to avoid staining or discoloring the wheels:

- **Do not use a cleaner that uses strong acid or alkali contents to clean the wheels.**
- **Do not apply wheel cleaners to the wheels when they are hot. The wheel temperature should be the same as ambient temperature.**
- **Rinse the wheel to completely remove the cleaner within 15 minutes after the cleaner is applied.**

CHROME PARTS

Clean chrome parts regularly with a non-abrasive chrome polish to maintain the finish.

TIRE DRESSING

NISSAN does not recommend the use of tire dressings. Tire manufacturers apply a coating to the tires to help reduce discoloration of the rubber. If a tire dressing is applied to the tires, it may react with the coating and form a compound. This compound may come off the tire while driving and stain the vehicle paint.

If you choose to use a tire dressing, take the following precautions:

- Use a water-based tire dressing. The coating on the tire dissolves more easily with an oil-based tire dressing.
- Apply a light coat of tire dressing to help prevent it from entering the tire tread/grooves (where it would be difficult to remove).
- Wipe off excess tire dressing using a dry towel. Make sure the tire dressing is completely removed from the tire tread/grooves.
- Allow the tire dressing to dry as recommended by the tire dressing manufacturer.

CLEANING INTERIOR

Occasionally remove loose dust from the interior trim, plastic parts and seats using a vacuum cleaner or soft bristled brush. Wipe the vinyl and leather surfaces (if so equipped) with a clean, soft cloth dampened in mild soap solution, then wipe clean with a dry soft cloth.

Regular care and cleaning is required in order to maintain the appearance of the leather (if so equipped).

Before using any fabric protector, read the manufacturer's recommendations. Some fabric protectors contain chemicals that may stain or bleach the seat material.

Use a cloth dampened only with water to clean the meter and gauge lens.

WARNING

Do not use water or acidic cleaners (hot steam cleaners) on the seat. This can damage the seat or occupant classification sensor (weight sensor). This can also affect the operation of the air bag system and result in serious personal injury.

CAUTION

- **Never use benzine, thinner, or any similar material.**
- **Small dirt particles can be abrasive and damaging to the leather surfaces (if so equipped) and should be removed promptly. Do not use saddle soap, car waxes, polishes, oils, cleaning fluids, solvents, detergents or ammonia-based cleaners as they may damage the leather's natural finish.**
- **Never use fabric protectors unless recommended by the manufacturer.**
- **Do not use glass or plastic cleaner on meter or gauge lens covers. It may damage the lens cover.**

AIR FRESHENERS

Most air fresheners use a solvent that could affect the vehicle interior. If you use an air freshener, take the following precautions:

- Hanging-type air fresheners can cause permanent discoloration when they contact vehicle interior surfaces. Place the air freshener in a location that allows it to hang free and not contact an interior surface.
- Liquid-type air fresheners typically clip on the vents. These products can cause immediate damage and discoloration when spilled on interior surfaces.

Carefully read and follow the manufacturer's instructions before using air fresheners.

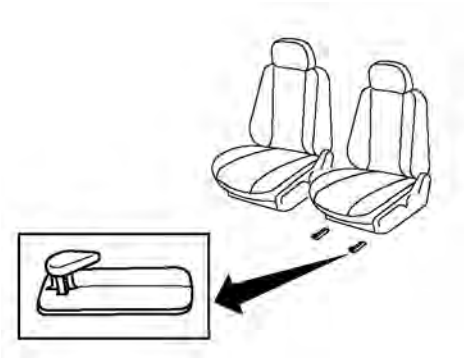

FLOOR MATS

WARNING

To avoid potential pedal interference that may result in a collision, injury or death:

- **NEVER place a floor mat on top of another floor mat in the driver front position or install them upside down or backwards.**
- **Use only Genuine NISSAN floor mats, or equivalent floor mats, that are specifically designed for use in your vehicle model and model year.**

- **Properly position the mats in the floorwell using the floor mat positioning hook. For additional information, refer to "Floor mat installation" in this section.**
- **Make sure the floor mat does not interfere with pedal operation.**
- **Periodically check the floor mats to make sure they are properly installed.**
- **After cleaning the vehicle interior, check the floor mats to make sure they are properly installed.**

The use of Genuine NISSAN floor mats can extend the life of your vehicle carpet and make it easier to clean the interior. Mats should be maintained with regular cleaning and replaced if they become excessively worn.

Floor mat installation

Your vehicle is equipped with floor mat positioning hook(s). The number and shape of the floor mat positioning hooks for each seating position varies depending on the vehicle.

When installing Genuine NISSAN floor mats, follow the installation instructions provided with the mat and the following:

1. Position the floor mat in the floorwell so that the floor mat grommet holes are aligned with the hook(s).
2. Secure the grommet holes into the hook(s) and ensure that the floor mat is properly positioned.
3. Make sure the floor mat does not interfere with pedal operation. With the ignition in the OFF position, the selector lever in the P (Park) position fully apply and release all pedals. The floor mat must not interfere with pedal operation or prevent the pedal from returning to its normal position.

It is recommended that you visit a NISSAN certified LEAF dealer for details about installing the floor mats in your vehicle.

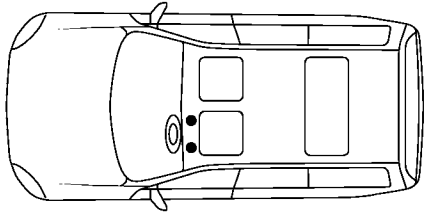

Positioning hooks

The illustration shows the location of floor mat positioning hooks.

SEAT BELTS

The seat belts can be cleaned by wiping them with a sponge dampened in a mild soap solution. Allow the belts to dry completely in the shade before using them.

For additional information, refer to "Seat belts" in the "Safety—Seats, seat belts and supplemental restraint system" section of this manual.

WARNING

Do not allow wet seat belts to roll up in the retractor. NEVER use bleach, dye, or chemical solvents to clean the seat belts, since these materials may severely weaken the seat belt webbing.

CORROSION PROTECTION

MOST COMMON FACTORS CONTRIBUTING TO VEHICLE CORROSION

- The accumulation of moisture-retaining dirt and debris in body panel sections, cavities, and other areas.
- Damage to paint and other protective coatings caused by gravel and stone chips or minor traffic accidents.

ENVIRONMENTAL FACTORS INFLUENCE THE RATE OF CORROSION

Moisture

Accumulation of sand, dirt and water on the vehicle body underside can accelerate corrosion. Wet floor coverings will not dry completely inside the vehicle, and should be removed for drying to avoid floor panel corrosion.

Relative humidity

Corrosion will be accelerated in areas of high relative humidity, especially those areas where the temperatures stay above freezing, where atmospheric pollution exists, or where road salt is used.

Temperature

A temperature increase will accelerate the rate of corrosion to those parts which are not well ventilated.

Air pollution

Industrial pollution, the presence of salt in the air in coastal areas, or heavy road salt use will accelerate the corrosion process. Road salt will also accelerate the disintegration of paint surfaces.

PROTECT YOUR VEHICLE FROM CORROSION

- Wash and wax your vehicle often to keep the vehicle clean.
- Always check for minor damage to the paint and repair it as soon as possible.
- Keep drain holes at the bottom of the doors open to avoid water accumulation.
- Check the underbody for accumulation of sand, dirt or salt. If present, wash with water as soon as possible.

CAUTION

- **NEVER remove dirt, sand or other debris from the passenger compartment by washing it out with a hose. Remove dirt with a vacuum cleaner.**
- **Never allow water or other liquids to come in contact with electronic components inside the vehicle as this may damage them.**

Chemicals used for road surface deicing are extremely corrosive. They accelerate corrosion and deterioration of underbody components such as the brake lines, brake cables, floor pan and fenders.

In winter, the underbody must be cleaned periodically.

For additional protection against rust and corrosion, which may be required in some areas, it is recommended that you consult a NISSAN certified LEAF dealer.

8 Maintenance and do-it yourself

Maintenance requirement 8-2
Scheduled maintenance 8-2
General maintenance 8-2
Where to go for service 8-2
General maintenance 8-3
Explanation of maintenance items 8-3
Maintenance precautions 8-5
Motor compartment check locations 8-8
Cooling system 8-8
Checking coolant level 8-9
Changing coolant 8-10
Reduction gear fluid 8-10
Brake fluid 8-11
Windshield-washer fluid 8-11
12-volt battery 8-12
Jump starting 8-14
Windshield wiper blades 8-14
Cleaning 8-14
Replacing 8-14
Rear window wiper blade 8-16
Brakes 8-16
Brake pad wear warning 8-16
Fuses 8-17
Motor compartment 8-17
Passenger compartment 8-20
Nissan Intelligent Key® battery replacement . . . 8-21
Lights 8-24
Headlights 8-24
Fog lights (if so equipped) 8-25
Exterior and interior lights 8-26
Wheels and tires 8-28
Tire pressure 8-28
Tire labeling 8-32
Types of tires 8-34
Tire chains 8-35
Changing wheels and tires 8-36
Emergency tire puncture repair kit 8-38

MAINTENANCE REQUIREMENT

Your new NISSAN has been designed to have minimum maintenance requirements with long service intervals to save you both time and money. However, some day-to-day and regular maintenance is essential to maintain your NISSAN's fine mechanical condition, and its Electric Vehicle (EV) system performance.

It is the owner's responsibility to make sure that the scheduled maintenance, and general maintenance, is performed.

As the vehicle owner, you are the only one who can ensure that your vehicle receives the proper maintenance care. You are a vital link in the maintenance chain.

SCHEDULED MAINTENANCE

For your convenience, both required and optional scheduled maintenance items are described and listed in your "NISSAN Service and Maintenance Guide". You must refer to that guide to ensure that necessary maintenance is performed on your NISSAN at regular intervals.

GENERAL MAINTENANCE

General maintenance includes those items which should be checked during normal day-to-day operation. They are essential for proper vehicle operation. It is your responsibility to perform these procedures regularly as prescribed.

Performing general maintenance checks requires minimal mechanical skill and only a few general automotive tools.

These checks or inspections can be done by yourself, a qualified technician or, if you prefer, a NISSAN certified LEAF dealer.

WHERE TO GO FOR SERVICE

If maintenance service is required or your vehicle appears to malfunction, have the systems checked and serviced. It is recommended that you visit a NISSAN certified LEAF dealer for this service.

NISSAN technicians are well-trained specialists and are kept up-to-date with the latest service information through technical bulletins, service tips, and in-dealership information systems. They are completely qualified to work on NISSAN vehicles **before** work begins.

You can be confident that a NISSAN certified LEAF dealer's service department performs the best job to meet the maintenance requirements on your vehicle — in a reliable and economical way.

GENERAL MAINTENANCE

During the normal day-to-day operation of the vehicle, general maintenance should be performed regularly as prescribed in this section. If you detect any unusual sounds, vibrations or smell, be sure to check for the cause or have a NISSAN certified LEAF dealer do it promptly. In addition, it is recommended that you visit a NISSAN certified LEAF dealer if you think that repairs are required.

When performing any checks or maintenance work, refer to "Maintenance precautions" in this section.

EXPLANATION OF MAINTENANCE ITEMS

Additional information on the following items with "*" is found in this section.

Outside vehicle

The maintenance items listed here should be performed from time to time, unless otherwise specified.

Doors and motor hood: Check that all doors and the motor hood operate properly. Also ensure that all latches lock securely. Lubricate hinges, latches, latch pins, rollers and links if necessary. Make sure that the secondary latch keeps the motor hood from opening when the primary latch is released.

When driving in areas using road salt or other corrosive materials, check lubrication frequently.

Lights*: Clean the headlights on a regular basis. Make sure that the headlights, stop lights, tail lights, turn signal lights and other lights are all operating properly and installed securely. Also check the aim of the headlights.

Road wheel nuts (lug nuts)*: When checking the tires, make sure that no wheel nuts are missing, and check for any loose wheel nuts. Tighten if necessary.

Tire rotation*: Tires should be rotated every 5,000 miles (8,000 km).

Tires*: Check the pressure with a gauge often and always prior to long distance trips. If necessary, adjust the pressure in all tires to the pressure specified. Check carefully for damage, cuts or excessive wear.

Tire Pressure Monitoring System (TPMS) transmitter components: Replace the TPMS transmitter grommet seal, valve core and cap when the tires are replaced due to wear or age.

Wheel alignment and balance: If the vehicle pulls to either side while driving on a straight and level road, or if you detect uneven or abnormal tire wear, there may be a need for wheel alignment.

If the steering wheel or seat vibrates at normal highway speeds, wheel balancing may be needed.

For additional information regarding tires, refer to "Important Tire Safety Information" (US) or "Tire Safety Information" (Canada) in the Warranty Information Booklet.

Windshield: Clean the windshield on a regular basis. Check the windshield at least every six months for cracks or other damage. Have a damaged windshield repaired by a qualified repair facility.

Wiper blades*: Check for cracks or wear if they do not wipe properly.

Inside vehicle

The maintenance items listed here should be checked on a regular basis, such as

when performing scheduled maintenance, cleaning the vehicle, etc.

Accelerator pedal: Check the pedal for smooth operation and make sure that the pedal does not catch or require uneven effort. Keep the floor mat away from the pedal.

Brake pedal: Check the pedal for smooth operation. If the brake pedal suddenly goes down further than normal, the pedal feels spongy or the vehicle seems to take longer to stop, it is recommended that you visit a NISSAN certified LEAF dealer immediately. Keep the floor mat away from the pedal.

Brakes: Check that the brakes do not pull the vehicle to one side when applied.

Electric shift P (Park) position mechanism: On a steep hill, check that the vehicle is held securely while the vehicle is in the P (Park) position without applying the brakes.

Parking brake: Check the parking brake operation regularly. The vehicle should be securely held on a steep hill with only the parking brake applied. If the parking brake cannot keep a vehicle position, it is recommended that you visit a NISSAN certified LEAF dealer for this service.

Seat: Check seat position controls such as the seat adjusters, seatback recliners, etc. to ensure that they operate smoothly and that all latches lock securely in every position. Check that the head restraints/headrests move up and down smoothly and that the locks (if so equipped) hold securely in all latched positions.

Seat belts: Check that all parts of the seat belt system (for example, buckles, anchors, adjusters and retractors) operate properly and smoothly, and are installed securely. Check the belt webbing for cuts, fraying, wear or damage.

Steering wheel: Check for changes in the steering conditions, such as excessive free play, hard steering or strange noises.

Warning lights and chimes: Make sure that all warning lights and chimes are operating properly.

Windshield defroster: Check that the air emits from the defroster outlets properly and in sufficient quantity when operating the heater or air conditioner.

Windshield wiper and washer*: Check that the wipers and washers operate properly and that the wipers do not streak.

Under hood and vehicle

The maintenance items listed here should be checked periodically.

12-volt battery (for serviceable battery)*:

Check the fluid level in each cell. The fluid should be at the bottom of the filler opening. Vehicles operated in high temperatures or under severe conditions require frequent checks of the 12-volt battery fluid level.

NOTE:
Care should be taken to avoid situations that can lead to potential battery discharge and potential no-start conditions such as:

1. **Installation or extended use of electronic accessories that consume battery power when the EV system is not running (Phone chargers, GPS, DVD players, etc.)**
2. **Vehicle is not driven regularly and/or only driven short distances.**

In these cases, the battery may need to be charged to maintain battery health.

Brake fluid level*: Make sure that the brake fluid level is between the "MAX" and "MIN" lines on the reservoir.

Coolant level*: Check the coolant level when the motor compartment is cold.

Fluid leaks: Check under the vehicle for water or other fluid leaks after the vehicle has been parked for a while. Water dripping from the air conditioner after use is normal. If you should notice any leaks, check for cause and have it corrected immediately.

Radiator and hoses: Check the front of the radiator and clean off any dirt, insects, leaves, etc., that may have accumulated. Make sure that the hoses have no cracks, deformation, rot or loose connections.

Underbody: The underbody is frequently exposed to corrosive substances such as those used on icy roads or to control dust. It is very important to remove these substances, otherwise rust will form on the floor pan and frame. At the end of winter, the underbody should be thoroughly flushed with plain water, being careful to clean those areas where mud and dirt may accumulate. For additional information, refer to "Cleaning exterior" in the "Appearance and care" section of this manual.

Windshield-washer fluid*: Check that there is an adequate amount of fluid in the reservoir.

MAINTENANCE PRECAUTIONS

When performing any inspection or maintenance work on your vehicle, always take care to prevent serious accidental injury to yourself or damage to the vehicle. The following are general precautions that should be closely observed.

WARNING

- **The EV system uses high voltage up to approximately DC 400 volt. The system can be hot during and after starting and when the vehicle is shut off. Be careful of both the high voltage and the high temperature. Obey the labels that are attached to the vehicle.**
- **Never disassemble, remove or replace high-voltage parts and cables as well as their connectors. High-voltage cables are colored orange.**
- **Disassembling, removing or replacing those parts or cables can cause severe burns or electric shock that may result in serious injury or death. The vehicle high-voltage system has no user serviceable parts. It is recommended that you visit a NISSAN certified LEAF dealer for any necessary maintenance.**

- **Park the vehicle on a level surface, apply the parking brake securely and chock the wheels to prevent the vehicle from moving. Push the P (Park) position switch on the shift lever or place the vehicle into the N (Neutral) position.**
- **If you must work with the EV (Electric vehicle) system is turned on, keep hands, clothing, hair and tools away from moving fans and any other moving parts.**
- **Make sure that the power switch is in the OFF or LOCK position when performing any part replacement or repairs.**
- **It is advisable to secure or remove any loose clothing and remove any jewelry, such as rings, watches, etc. before working on your vehicle.**
- **Always wear eye protection whenever you work on your vehicle.**
- **Never get under the vehicle while it is supported only by a jack. If it is necessary to work under the vehicle, support it with safety stands.**
- **Keep smoking materials, flames and sparks away from the 12-volt battery.**

CAUTION

- **Do not work under the hood while the motor compartment is hot. Push the power switch in the OFF position and wait until it cools down.**
- **Avoid direct contact with used coolant. Improperly disposed coolant and/or other vehicle fluids can damage the environment. Always conform to local regulations for the disposal of vehicle fluids.**
- **Never connect or disconnect the battery or any transistorized component while the power switch is in the ON position.**
- **Your vehicle is equipped with an automatic cooling fan. It may come on at any time without warning, even if the power switch is not in the ACC, ON or READY to drive position. To avoid injury, always disconnect the negative 12-volt battery cable before working near the fan.**
- **Before performing any electrical maintenance work on the vehicle such as the battery, fuses or bulb replacement, confirm the following:**
  - **The charge connector is removed from the vehicle.**
  - **The Climate Ctrl. Timer is not active or operating. For additional information, refer to "Climate Ctrl. Timer" in the "Monitor, climate, audio, phone and voice recognition systems" section of this manual.**
  - **The 12-volt battery is not being charged by the Li-ion battery and that all charging status indicator lights are off. For additional information, refer to "Charging the 12-volt battery" in the "EV overview" section and "Charging status indicator lights" in the "Charging" section of this manual.**
- **The power switch is in the OFF position. Place the power switch in the ON position and then in the OFF position to prevent the 12-volt battery automatically being charged by the Li-ion battery. For additional information, refer to "Charging the 12-volt battery" in the "EV overview" section of this manual.**

The "Maintenance and do-it-yourself" section gives instructions regarding only those items that are relatively easy for an owner to perform.

A Genuine NISSAN Service Manual is also available. For additional information, refer to "Owner's manual/service manual order information" in the "Technical and consumer information" section of this manual.

You should be aware that incomplete or improper servicing may result in operating difficulties and could affect your warranty coverage. **If in doubt about any servicing, it is recommended that you visit a NISSAN certified LEAF dealer.**

MOTOR COMPARTMENT CHECK LOCATIONS

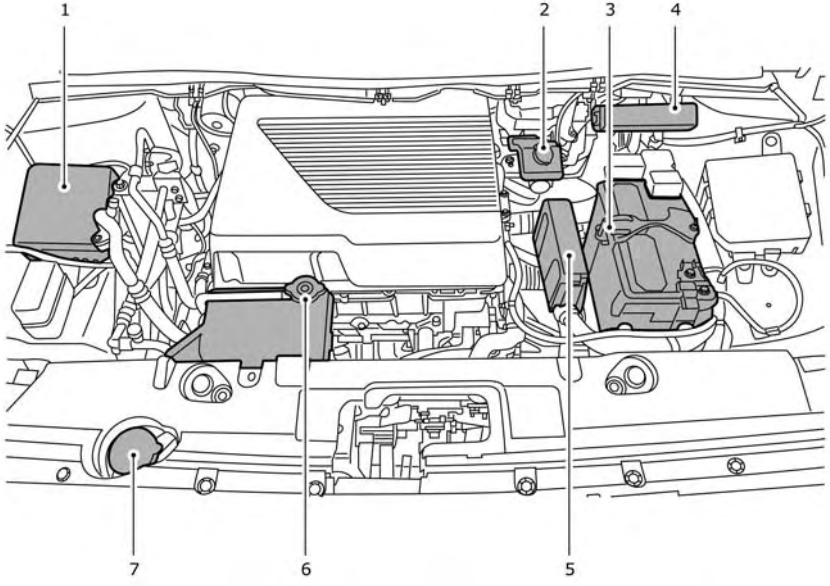

1. Fuse/Fusible link holder
2. Brake fluid reservoir
3. 12-volt battery
4. Fuse holder
5. Fuse/Fusible link holder
6. Coolant reservoir cap
7. Windshield-washer fluid reservoir

COOLING SYSTEM

The cooling system is filled at the factory with a pre-diluted mixture of 50% Genuine NISSAN Long Life Antifreeze/Coolant (blue) and 50% water to provide year-round anti-freeze and coolant protection. The anti-freeze solution contains rust and corrosion inhibitors. Additional cooling system additives are not necessary.

WARNING

- **Never remove the coolant tank cap when the motor compartment is hot. Wait until the motor compartment cool down.**
- **The coolant tank is equipped with a special type coolant tank cap. To prevent damage to the motor compartment, use only a Genuine NISSAN coolant tank cap.**

CAUTION

- **Never use any additives in the coolant such as radiator sealer in the cooling system. This may cause damage to electrical equipment such as the motor and inverter.**

- **When adding or replacing coolant, be sure to use only a Genuine NISSAN Long Life Antifreeze/ Coolant (blue) or equivalent. Genuine NISSAN Long Life Antifreeze/ Coolant (blue) is pre-diluted to provide antifreeze protection to −34°F (−37°C) . If additional freeze protection is needed due to the weather conditions where you operate your vehicle, add Genuine NISSAN Long Life Antifreeze/ Coolant (blue) concentrate following the directions on the container. If and equivalent coolant other than Genuine NISSAN Long Life Antifreeze/Coolant (blue) is used, follow the coolant manufacture's instructions to maintain minimum antifreeze protection to −34°F (−37°C). The use of other types of coolant solutions other than Genuine NISSAN Long Life Antifreeze/Coolant (blue) or equivalent may damage the cooling system.**

- **The life expectancy of the factory-fill coolant is 125,000 miles (200,000 km) or 15 years. Mixing any other type of coolant other than Genuine NISSAN Long Life Antifreeze/Coolant (blue), including Genuine NISSAN Long Life Antifreeze/Coolant (green), or the use of non-distilled water will reduce the life expectancy of the factory-filled coolant. For additional information, refer to the NISSAN Service and Maintenance Guide.**

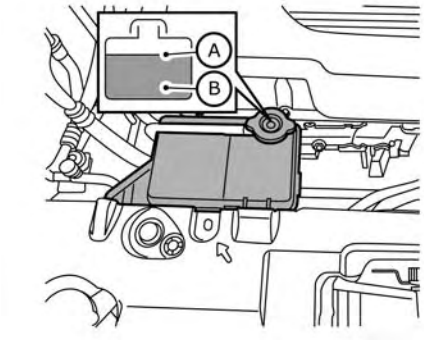

CHECKING COOLANT LEVEL

Check the coolant level **in the reservoir when the high-voltage parts are cold.** If the coolant level is below the MIN level Ⓑ, open the reservoir cap and add coolant up to the MAX level Ⓐ. If the reservoir is empty, check the coolant level in the coolant reservoir **when the high-voltage parts are cold.** If there is insufficient coolant in the coolant reservoir, fill the coolant reservoir with coolant up to the reservoir cap opening and also add it to the reservoir up to the MAX level Ⓐ.

Tighten the cap securely after adding coolant.

For additional information on the location of the coolant reservoir, refer to "Motor compartment check locations" in this section.

If the cooling system frequently requires coolant, it is recommended that you visit a NISSAN certified LEAF dealer.

CHANGING COOLANT

It is recommended that major cooling system repairs should be performed by a NISSAN certified LEAF dealer. The service procedures can be found in the appropriate NISSAN Service Manual.

Improper servicing can result in reduced heater performance.

WARNING

- **To avoid the danger of being scalded, never change the coolant when the motor compartment is hot.**
- **Never remove the coolant reservoir cap when the motor compartment is hot. Serious burns could be caused by high-pressure fluid escaping from the radiator.**
- **Avoid direct skin contact with used coolant. If skin contact is made, wash thoroughly with soap or hand cleaner as soon as possible.**
- **Keep coolant out of reach of children and pets.**

Coolant must be disposed of properly. Check your local regulations.

REDUCTION GEAR FLUID

When checking or replacement is required, it is recommended that you visit a NISSAN certified LEAF dealer for this service.

CAUTION

- **Use only Genuine NISSAN Matic S ATF. Do not mix with other fluids.**
- **Using reduction gear fluid other than Genuine NISSAN Matic S ATF will cause deterioration in driveability and reduction gear durability, and may damage the reduction gear, which is not covered by the NISSAN New Vehicle Limited Warranty.**

BRAKE FLUID

For additional brake fluid information, refer to "Recommended fluids/lubricants and capacities" in the "Technical and consumer information" section of this manual.

WARNING

- **Use only new fluid from a sealed container. Old, inferior or contaminated fluid may damage the brake system. The use of improper fluids can damage the brake system, and affect the vehicle's stopping ability.**
- **Clean the filler cap before removing.**
- **Brake fluid is poisonous and should be stored carefully in marked containers out of the reach of children.**

CAUTION

Do not spill the fluid on any painted surfaces. This will damage the paint. If fluid is spilled, immediately wash the surface with water.

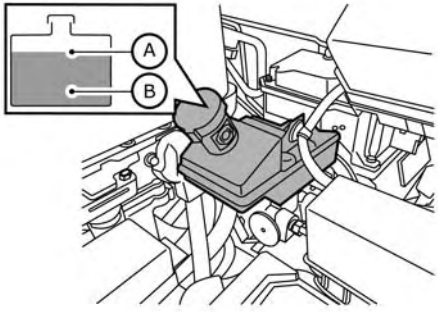

Check the fluid level in the reservoir. If the fluid is below the MIN line Ⓑ or the brake warning light illuminates, add Genuine NISSAN Super Heavy Duty Brake Fluid or equivalent **DOT 3** fluid up to the MAX line Ⓐ. If fluid must be added frequently, the system should be checked. It is recommended that you visit a NISSAN certified LEAF dealer for this service.

WINDSHIELD-WASHER FLUID

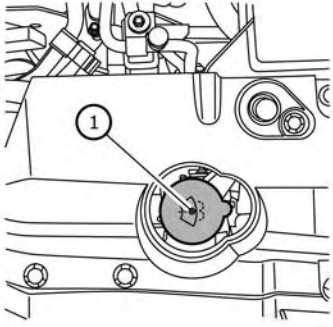

Except for Canada

To check the fluid level, use your finger to plug the center hole ① of the cap/tube assembly, then remove it from the reservoir. If there is no fluid in the tube, add fluid.

For Canada

Fill the windshield-washer fluid reservoir periodically. Add windshield-washer fluid when the "Low Washer Fluid" message appears on the vehicle information display. For additional information, refer to "Vehicle

information display warnings and indicators" in the "Instruments and controls" section of this manual.

To fill the windshield-washer fluid reservoir, lift the cap ① and pour the windshield-washer fluid into the reservoir opening.

Add a windshield-washer solvent to the reservoir for better cleaning. In the winter season, add a windshield-washer anti-freeze. Follow the manufacturer's instructions for the mixture ratio.

Refill the reservoir more frequently when driving conditions require an increased amount of windshield-washer fluid.

Recommended fluid:

Genuine NISSAN Windshield-Washer Concentrate Cleaner & Antifreeze or equivalent

CAUTION

- **Do not substitute antifreeze coolant for windshield-washer solution. This may result in damage to the paint.**
- **Do not fill the windshield-washer reservoir with windshield-washer fluid concentrates at full strength. Some methyl alcohol based windshield-washer fluid concentrates may permanently stain the grille if spilled while filling the windshield-washer reservoir.**
- **Pre-mix windshield-washer fluid concentrates with water to the manufacturer's recommended levels before pouring the fluid into the windshield-washer reservoir. Do not use the windshield-washer reservoir to mix the windshield-washer fluid concentrate and water.**

12-VOLT BATTERY

- Keep the 12-volt battery surface clean and dry. Clean the 12-volt battery with a solution of baking soda and water.
- Make certain the terminal connections are clean and securely tightened.

NOTE:

Care should be taken to avoid situations that can lead to potential battery discharge and potential no-start conditions such as:

1. **Installation or extended use of electronic accessories that consume battery power when the EV system is not running (Phone chargers, GPS, DVD players, etc.)**
2. **Vehicle is not driven regularly and/or only driven short distances.**

In these cases, the battery may need to be charged to maintain battery health

WARNING

- **Do not expose the 12-volt battery to flames or electrical sparks. Hydrogen gas generated by the 12-volt battery is explosive. Do not allow 12-volt battery fluid to contact your**

skin, eyes, fabrics or painted surfaces. After touching a 12-volt battery or 12-volt battery cap, do not touch or rub your eyes. Thoroughly wash your hands. If the acid contacts your eyes, skin or clothing, immediately flush with water for at least 15 minutes and seek medical attention.

- **Do not operate the vehicle if the fluid in the 12-volt battery is low. Low 12-volt battery fluid can cause a higher load on the 12-volt battery which can generate heat, reduce battery life, and in some cases lead to an explosion.**
- **When working on or near a 12-volt battery, always wear suitable eye protection and remove all jewelry.**
- **12-volt battery posts, terminals and related accessories contain lead and lead compounds. Wash hands after handling.**
- **Keep the 12-volt battery out of the reach of children.**

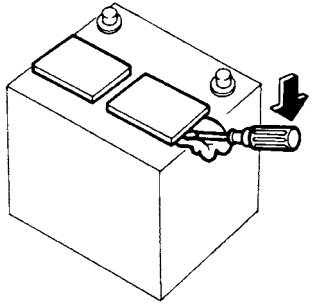

1. Remove the vent caps with a screwdriver as shown. Use a cloth to protect the battery case.

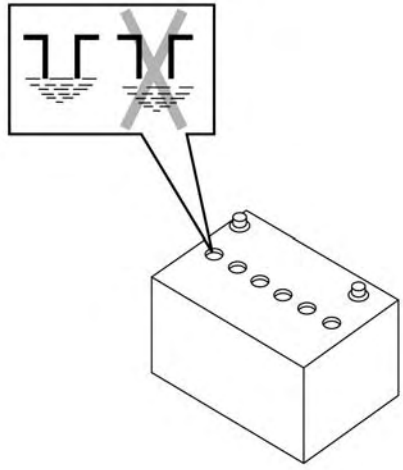

2. Check the fluid level in each cell. If it is necessary to add fluid, add only distilled water to bring the level up to the bottom of the filler opening. **Do not overfill.** Reinstall the vent caps.

Vehicles operated in high temperatures or under severe conditions require frequent checks of the 12-volt battery fluid level.

JUMP STARTING

Jump starting provides power to the 12 volt system to allow the electrical systems to operate. The electrical systems must be operating to allow the Li-ion battery to be charged. Jump starting does not charge the Li-ion battery. The Li-ion battery must be charged before the vehicle can be driven.

For additional information, refer to "Jump starting" in the "In case of emergency" section of this manual. If the power switch does not switch to the READY to drive position by jump starting, the 12-volt battery may have to be replaced. It is recommended that you visit a NISSAN certified LEAF dealer for this service.

WINDSHIELD WIPER BLADES

CLEANING

If your windshield is not clear after using the windshield washer or if a wiper blade chatters when running, wax or other material may be on the blade or windshield.

Clean the outside of the windshield with a washer solution or a mild detergent. Your windshield is clean if beads do not form when rinsing with clear water.

Clean each blade by wiping it with a cloth soaked in a washer solution or a mild detergent. Then rinse the blade with clear water. If your windshield is still not clear after cleaning the blades and using the wiper, replace the blades.

CAUTION

Worn windshield wiper blades can damage the windshield and impair driver vision.

REPLACING

Replace the wiper blades if they are worn.

Pulling up the wiper arm

The wiper arm should be in the up position when replacing the wiper.

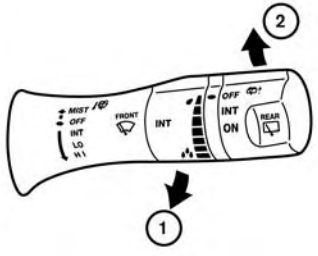

Pull up the wiper arm manually or using the wiper rise-up function (if so equipped).

Wiper rise-up function (if so equipped):

To pull up the wiper arm, pull the lever ① within 1 minute after the power switch is turned off. The wiper operation stops in mid-operation and wiper arm can be pulled up.

To lower the wiper arm, place the wiper arm in the down position and then push the lever ② up once after the power switch is turned on.

CAUTION

Do not operate the windshield wiper while arm is pulled up. The wiper arm or hood may be damaged.

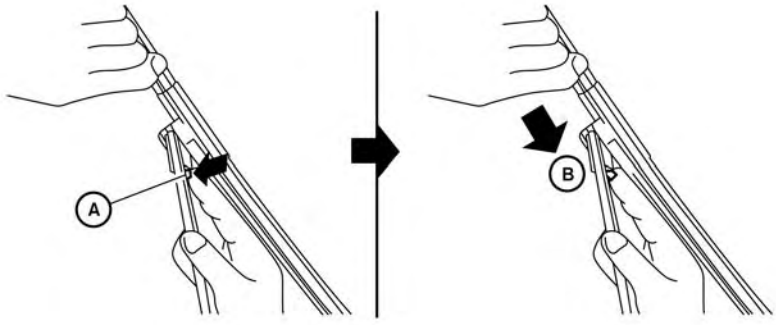

Replacing

1. Push the release tab Ⓐ, and move the wiper blade down the wiper arm Ⓑ while pushing the release tab to remove.
2. Insert the new wiper blade onto the wiper arm until a click sounds.
3. Rotate the wiper blade so that the dimple is in the groove.

CAUTION

- **After wiper blade replacement, return the wiper arm to its original position; otherwise it may be damaged when the hood is opened.**
- **Make sure the wiper blades contact the glass; otherwise the arm may be damaged from wind pressure.**

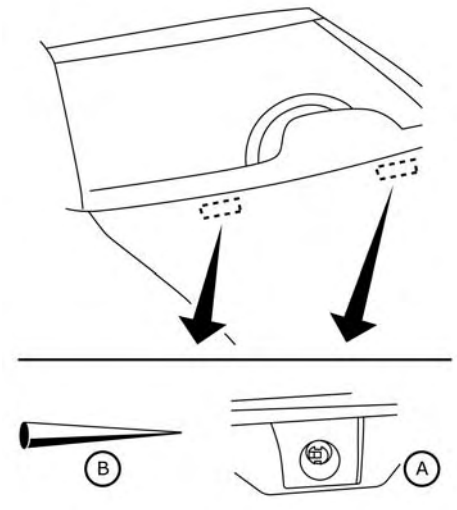

Be careful not to clog the washer nozzle Ⓐ. This may cause improper windshield washer operation. If the nozzle is clogged, remove any objects with a needle or small pin Ⓑ. Be careful not to damage the nozzle.

REAR WINDOW WIPER BLADE

It is recommended that you visit a NISSAN certified LEAF dealer if checking or replacement is required.

BRAKES

If the brakes do not operate properly, have the brakes checked. It is recommended that you visit a NISSAN certified LEAF dealer for this service.

WARNING

Do not adjust the height of the brake pedal. Doing so could alter the effectiveness of the brakes, which could result in a serious accident and personal injury. If adjustment is required, it is recommended that you visit a NISSAN certified LEAF dealer for this service.

BRAKE PAD WEAR WARNING

The disc brake pads have audible wear warnings. When a brake pad requires replacement, it will make a high pitched scraping sound when the vehicle is in motion. This scraping sound will first occur only when the brake pedal is depressed. After more wear of the brake pad, the sound will always be heard even if the brake pedal is not depressed. Have the brakes checked as soon as possible if the wear warning sound is heard.

Under some driving or climate conditions, occasional brake squeak, squeal or other

noise may be heard. Occasional brake noise during light to moderate stops is normal and does not affect the function or performance of the brake system.

Proper brake inspection intervals should be followed. For additional information, refer to the maintenance log section of your NISSAN Service and Maintenance Guide.

FUSES

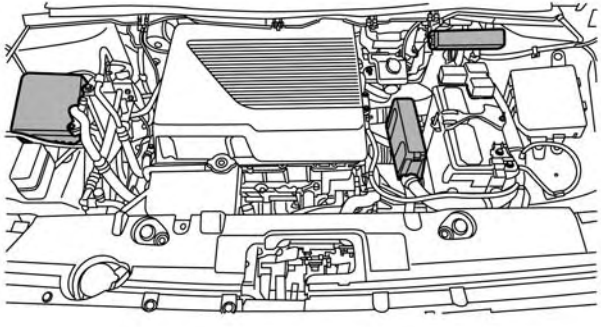

MOTOR COMPARTMENT

WARNING

- **Never touch, disassemble, remove or replace the high-voltage parts and cables, as well as their connectors. High-voltage cables are colored orange. Touching, disassembling, removing or replacing those parts and cables can cause severe burns or electric shock that may result in serious injury or death.**
- **Never use a fuse of a higher or lower amperage rating than that specified on the fuse box cover. This could damage the electrical system or electronic control units or cause a fire.**

If any electrical equipment does not operate, check for an open fuse.

1. Confirm that the power switch and the headlight switch are turned off.
2. Open the hood.
3. Remove the fuse/fusible link holder cover by pushing the tab and lifting the

cover from the right side, and then the left side.

4. Locate the fuse that needs to be replaced.
5. Remove the fuse using the fuse puller located in the passenger compartment fuse box.

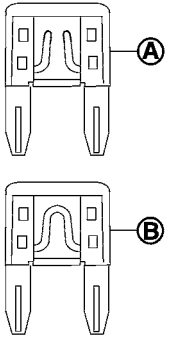

6. If the fuse is open Ⓐ, replace it with a new fuse Ⓑ.
7. If a new fuse also opens, have the electrical system checked, and if necessary, repaired. It is recommended that you visit a NISSAN certified LEAF dealer for this service.

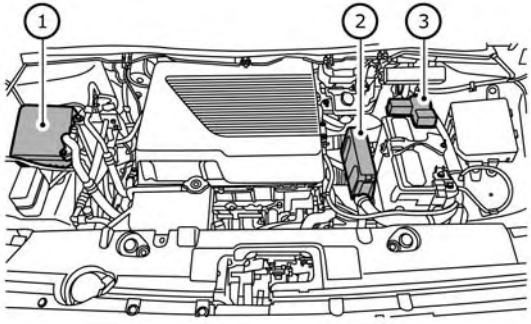

Fusible links

If any electrical equipment does not operate and the fuses are in good condition, check the fusible links in the holders ①, ② and ③. If any of these fusible links are melted, replace only with Genuine NISSAN parts.

For checking and replacing the fusible links in the holders ①, ② and ③, it is recommended that you visit a NISSAN certified LEAF dealer for this service.

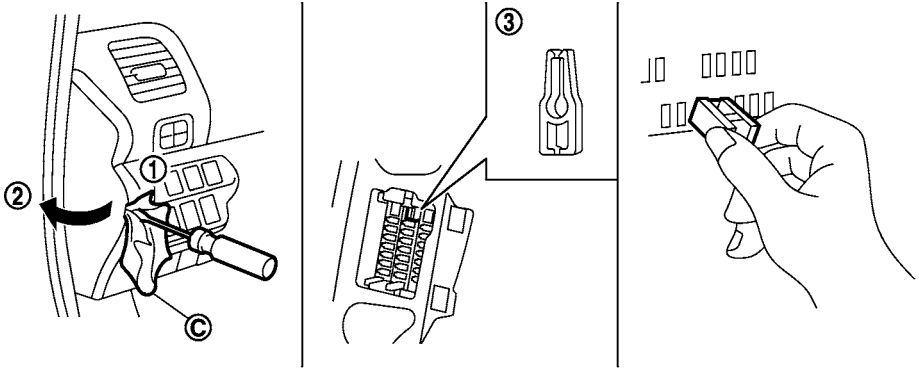

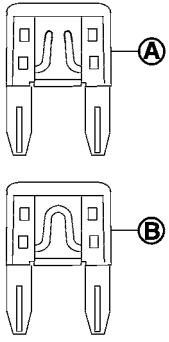

PASSENGER COMPARTMENT

WARNING

Never use a fuse of a higher or lower amperage rating than that specified on the fuse box cover. This could damage the electrical system or electronic control units or cause a fire.

If any electrical equipment does not operate, check for an open fuse.

1. Make sure that the power switch and the headlight switch are turned off.
2. Insert a screwdriver wrapped with the cloth Ⓒ into the slit ①.

   Use a cloth Ⓒ to protect the fuse box cover.
3. Then pull to remove the fuse box cover ②.
4. Remove the fuse with the fuse puller ③.
5. If the fuse is open Ⓐ, replace it with a new fuse Ⓑ.
6. If a new fuse also opens, have the electrical system checked, and if necessary repaired. It is recommended that you visit a NISSAN certified LEAF dealer for this service.

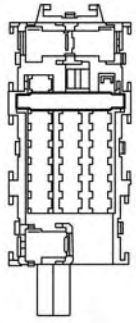

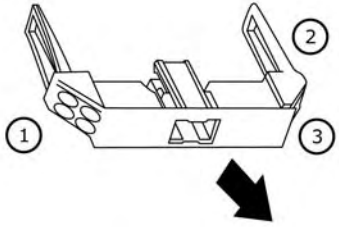

Extended storage switch

If any electrical equipment does not operate, remove the extended storage switch and check for an open fuse.

NOTE:
The extended storage switch is used for long term vehicle storage. Even if the extended storage switch is broken it is not necessary to replace it. Replace only the open fuse in the switch with a new one.

How to replace the extended storage switch:

1. To remove the extended storage switch, be sure the ignition switch is in the OFF position.
2. Be sure the headlight switch is in the OFF position.
3. Remove the fuse box cover.
4. Pinch the locking tabs ① and ② found on each side of the storage switch.
5. Pull the storage switch straight out from the fuse box ③.

NISSAN INTELLIGENT KEY® BATTERY REPLACEMENT

CAUTION

- **Be careful not to allow children to swallow the battery and removed parts.**
- **An improperly disposed battery can harm the environment. Always confirm local regulations for battery disposal.**
- **When changing batteries, do not let dust or oil get on the components.**
- **There is danger of explosion if the lithium battery is incorrectly replaced. Replace only with the same or equivalent type.**

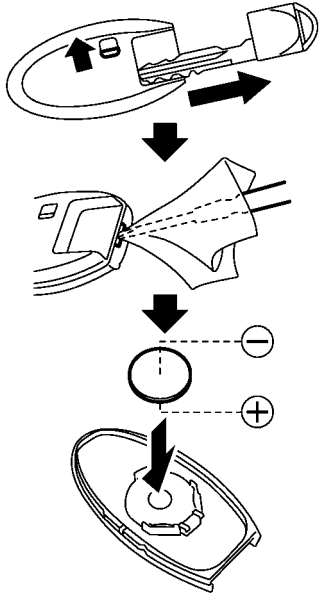

Replace the battery in the Intelligent Key as follows:

1. Remove the mechanical key from the Intelligent Key.
2. Insert a small screwdriver into the slit of the corner and twist it to separate the upper part from the lower part. Use a cloth to protect the casing.
3. Replace the battery with a new one.

   Recommended battery:

   CR2025 or equivalent

   - Do not touch the internal circuit and electric terminals as doing so could cause a malfunction.
   - Hold the battery by the edges. Holding the battery across the contact points will seriously deplete the storage capacity.
   - Make sure that the ⊕ side faces the bottom of the case.

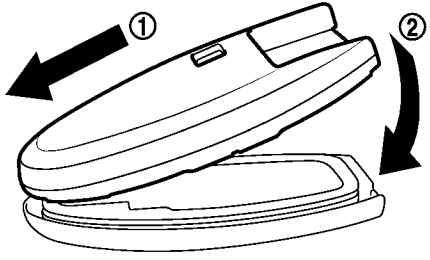

4. Align the tips of the upper and lower parts ①, and then push them together ② until it is securely closed.
5. Operate the buttons to check that it is functioning properly.

It is recommended that you visit a NISSAN certified LEAF dealer for this service.

FCC Notice:

For USA:

This device complies with Part 15 of the FCC Rules. Operation is subject to the following two conditions: (1) This device may not cause harmful interference, and (2) this device must accept any interference received, including interference that may cause undesired operation.

NOTE:
Changes or modifications not expressly approved by the party responsible for compliance could void the user's authority to operate the equipment.

For Canada:

This device complies with Industry Canada licence-exempt RSS standard(s). Operation is subject to the following two conditions: (1) this device may not cause interference, and (2) this device must accept any interference, including interference that may cause undesired operation of the device.

LIGHTS

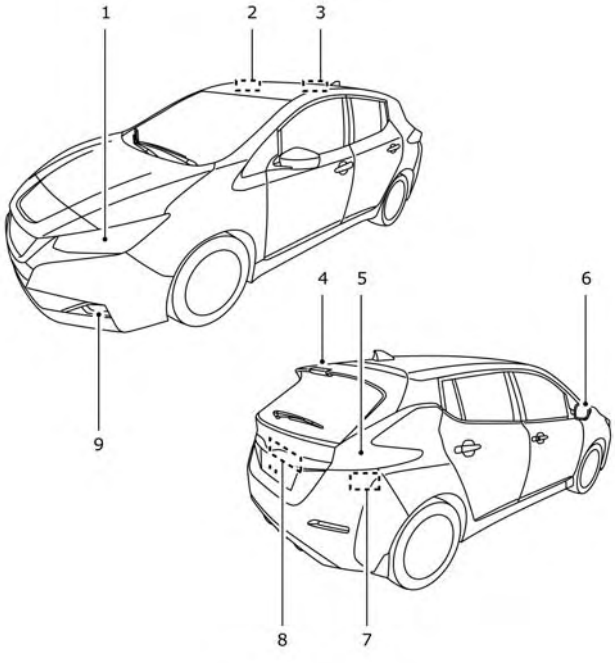

1. Headlight assembly
2. Map light
3. Room light
4. High-mounted stop light
5. Rear combination light
6. Door mirror turn signal
7. Cargo light
8. License plate light
9. Fog light (if so equipped)

Fog may temporarily form inside the lens of the exterior lights in the rain or in a car wash. A temperature difference between the inside and the outside of the lens causes the fog. This is not a malfunction. If large drops of water collect inside the lens, it is recommended that you visit a NISSAN certified LEAF dealer for this service.

HEADLIGHTS

If headlight bulb replacement is required, it is recommended that you visit a NISSAN certified LEAF dealer for this service.

Replacing

Halogen headlight (high-beam):

The headlight high-beam is a semi-sealed beam type that uses a replaceable headlight (halogen) bulb.

CAUTION

- **Do not leave the bulb out of the headlight reflector for a long period of time. Dust, moisture, smoke, etc. entering the headlight body may affect bulb performance.**
- **High-pressure halogen gas is sealed inside the halogen bulb. The bulb may break if the glass envelope is scratched or the bulb is dropped.**
- **Only touch the base when handling the bulb. Never touch the glass envelope. Touching the glass envelope could significantly affect bulb life and/or headlight performance.**
- **Aiming is not necessary after replacing the bulb. When aiming adjustment is necessary, it is recommended that you visit a NISSAN certified LEAF dealer for this service.**
- **Fog may temporarily form inside the lens of the exterior lights in the rain or in a car wash. A temperature difference between the inside and the outside of the lens causes the fog. This is not a malfunction. If large drops of water collect inside the lens, it is recommended that you visit a NISSAN certified LEAF dealer for this service.**

Use the same number and wattage as originally installed as shown in the chart.

FOG LIGHTS (IF SO EQUIPPED)

If fog light bulb replacement is required, it is recommended that you visit a NISSAN certified LEAF dealer for this service.

EXTERIOR AND INTERIOR LIGHTS

Item	Wattage (W)	Bulb No.
Headlight assembly (Type A) (if so equipped)*		
High*	60	HB3
Low*	55	H11
Park/Turn signal*	28/8	7444NA
Side marker*	—	—
Headlight assembly (Type B) (if so equipped)*		
High*	—	—
Low*	—	—
Daytime running (if so equipped)*	—	—
Park/Turn signal*	28/8	7444NA
Side marker*	—	—
Front fog light (if so equipped)*	35	H8
Charge port lid light*	—	—
Rear combination light		
Turn signal	21	WY21W
Stop/Tail*	—	—
Back-up	16	W16W
Side marker*	—	—
License plate light*	5	W5W
Map light*	—	—
Door mirror turn signal light (if so equipped)*	—	—
High-mounted stop light*	—	—
Vanity mirror light*	1.4	—
Glove box light*	1.4	—
Room light*	8	—
Cargo light	5	W5W

*It is recommended that you visit a NISSAN certified LEAF dealer for replacement.

NOTE:
Always check with the Parts Department at a NISSAN certified LEAF dealer for the latest information about parts.

Replacement procedures

All other lights are either type A, B, C, D or E. When replacing a bulb, first remove the lens and/or cover.

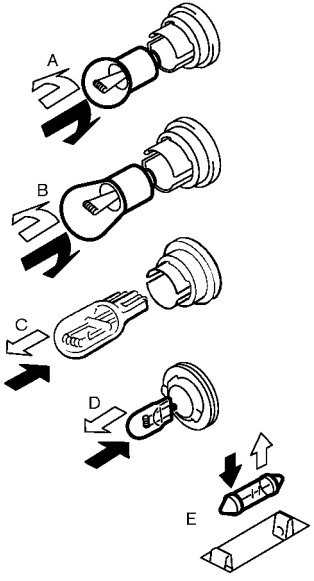

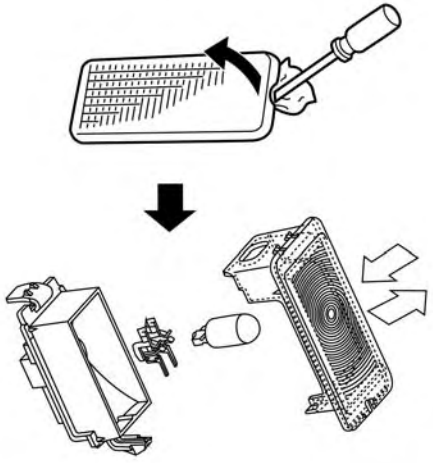

Cargo light

⇨ : REMOVE

➡ : INSTALL

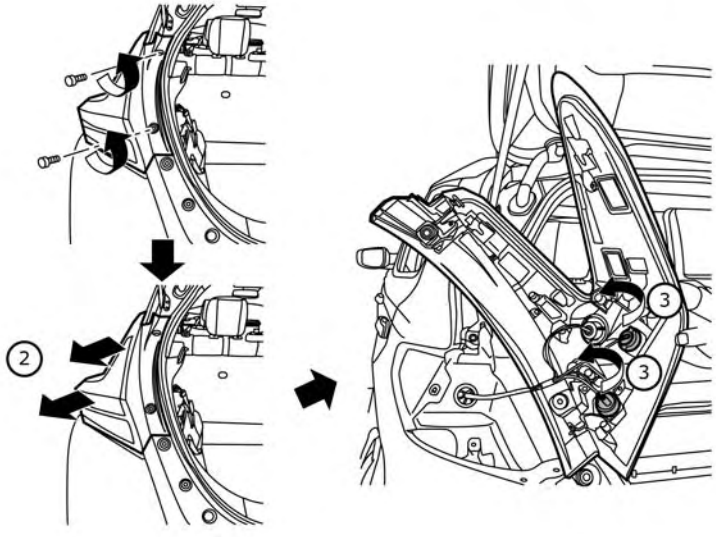

Rear combination light

1. Remove the rear combination attachment bolts ①.
2. Pull the rear combination assembly as shown in the illustration ②.
3. Turn the bulb sockets and then remove the bulbs ③.

WHEELS AND TIRES

If you have a flat tire, refer to "Flat tire" in the "In case of emergency" section.

TIRE PRESSURE

Tire Pressure Monitoring System (TPMS)

WARNING

Radio waves could adversely affect electric medical equipment. Those who use a pacemaker should contact the electric medical equipment manufacturer for the possible influences before use.

This vehicle is equipped with the Tire Pressure Monitoring System (TPMS). It monitors tire pressure of all tires. When the low tire pressure warning light is lit, and the CHECK TIRE PRESSURE warning appears on the vehicle information display, one or more of your tires is significantly under-inflated.

The TPMS will activate only when the vehicle is driven at speeds above

16 mph (25 km/h). Also, this system may not detect a sudden drop in tire pressure (for example a flat tire while driving).

For additional information, refer to "Low tire pressure warning light" in the "Instruments and controls" section, "Tire Pressure Monitoring System (TPMS)" in the "Starting and driving" section and "Tire Pressure Monitoring System (TPMS)" in the "In case of emergency" section of this manual.

Tire inflation pressure

Check the pressure of the tires often and always prior to long distance trips. The recommended tire pressure specifications are shown on the F.M.V.S.S/C.M.V.S.S certification label or Tire and Loading Information label under the "Cold Tire Pressure" heading. The Tire and Loading Information label is affixed to the driver side center pillar. Tire pressures should be checked regularly because:

- Most tires naturally lose air over time.
- Tires can lose air suddenly when driven over potholes or other objects or if the vehicle strikes a curb while parking.

The tire pressures should be checked when the tires are cold. The tires are considered COLD after the vehicle has been parked for 3 or more hours, or driven less than 1 mile (1.6 km) at moderate speeds.

The TPMS with Easy-Fill Tire Alert also provides visual and audible signals outside the vehicle for inflating the tires to the recommended COLD tire pressure. For additional information, refer to "TPMS with Easy-Fill Tire Alert" in the "Starting and driving" section of this manual.

Incorrect tire pressure, including under inflation, may adversely affect tire life and vehicle handling.

WARNING

- **Improperly inflated tires can fail suddenly and cause an accident.**
- **The Gross Vehicle Weight rating (GVWR) is located on the F.M.V.S.S./C.M.V.S.S certification label. The vehicle weight capacity is indicated on the Tire and Loading Information label. Do not load your vehicle beyond this capacity. Overloading your vehicle may result in reduced tire life, unsafe operating conditions due to premature tire failure, or unfavorable handling characteristics and could also lead to a serious accident. Loading beyond the specified capacity**

may also result in failure of other vehicle components.

- **Before taking a long trip, or whenever you heavily load your vehicle, use a tire pressure gauge to ensure that the tire pressures are at the specified level.**
- **For additional information regarding tires, refer to "Important Tire Safety Information" (US) or "Tire Safety Information" (Canada) in the Warranty Information Booklet.**

Tire and Loading Information label

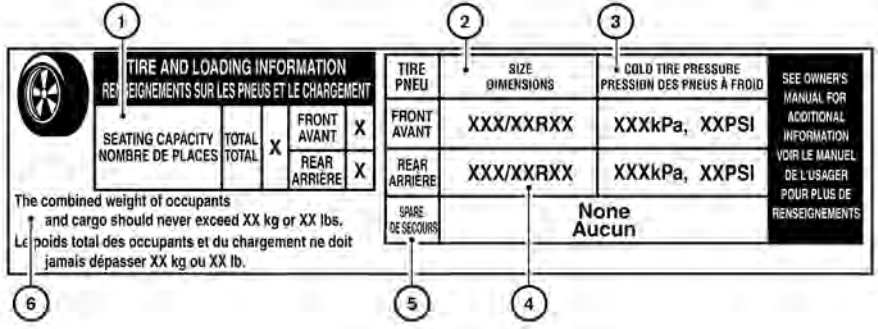

① Seating capacity: The maximum number of occupants that can be seated in the vehicle.

② Original size: The size of the tires originally installed on the vehicle at the factory.

③ Cold tire pressure: Inflate the tires to this pressure when the tires are cold. Tires are considered COLD after the vehicle has been parked for 3 or more hours, or driven less than 1 mile (1.6 km) at moderate speeds. The recommended cold tire inflation is set by the manufacturer to provide the best balance of tire wear, vehicle handling, driveability, tire noise, etc., up to the vehicle's GVWR.

④ Tire size — refer to "Tire labeling" in this section.

⑤ Spare tire size or compact spare tire size (if so equipped)

⑥ Vehicle load limit: For additional information, refer to "Vehicle loading information" in the "Technical and consumer information" section of this manual.

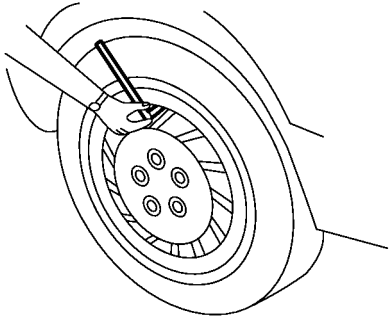

Checking tire pressure

1. Remove the valve stem cap from the tire.
2. Press the pressure gauge securely onto the valve stem. Do not press too hard or force the valve stem sideways, otherwise air will escape. If the hissing sound of air escaping from the tire is heard while checking the pressure, reposition the gauge to eliminate this leakage.
3. Remove the gauge.
4. Read the tire pressure on the gauge stem and compare it to the specification shown on the Tire and Loading Information label.
5. Add air to the tire as necessary. If too much air is added, press the core of the valve stem briefly with the tip of the gauge stem to release pressure. Recheck the pressure and add or release air as necessary.
6. Install the valve stem cap.
7. Check the pressure of all of the tires.

	SIZE	COLD TIRE INFLATION PRESSURE
FRONT ORIGINAL TIRE	P205/55R16 89H	250 kPa, 36 PSI
FRONT ORIGINAL TIRE	P215/50R17 90V	250 kPa, 36 PSI
REAR ORIGINAL TIRE	P205/55R16 89H	250 kPa, 36 PSI
REAR ORIGINAL TIRE	P215/50R17 90V	250 kPa, 36 PSI

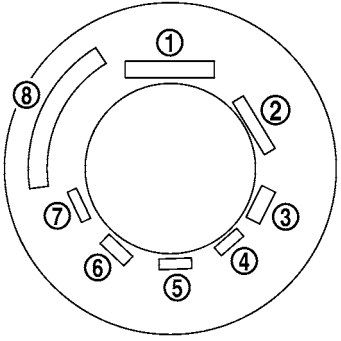

Example

TIRE LABELING

Federal law requires tire manufacturers to place standardized information on the sidewall of all tires. This information identifies and describes the fundamental characteristics of the tire and also provides the tire identification number (TIN) for safety standard certification. The TIN can be used to identify the tire in case of a recall.

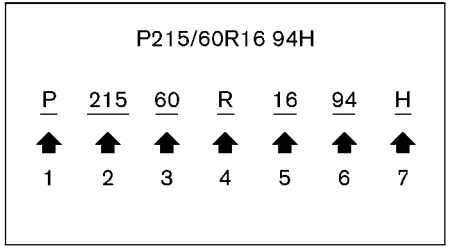

Example

① Tire size (example: P215/60R16 94H)

1. P. The "P" indicates the tire is designed for passenger vehicles. (Not all tires have this information.)
2. Three-digit number (215): This number gives the width in millimeters of the tire from sidewall edge to sidewall edge.
3. Two-digit number (60): This number, known as the aspect ratio, gives the tire's ratio of height to width.
4. R: The "R" stands for radial.
5. Two-digit number (16): This number is the wheel or rim diameter in inches.
6. Two- or three-digit number (94): This number is the tire's load index. It is a measurement of how much weight each tire can support. You may not find this information on all tires because it is not required by law.
7. H: Tire speed rating. You should not drive the vehicle faster than the tire speed rating.

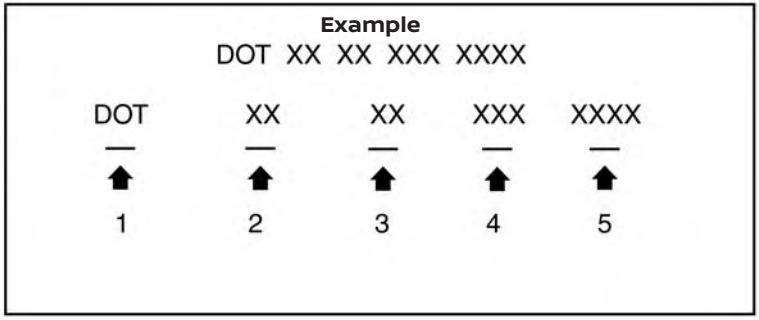

② TIN (Tire Identification Number) for a new tire (example: DOT XX XX XXX XXXX)

1. DOT: Abbreviation for the "Department of Transportation". The symbol can be placed above, below or to the left or right of the Tire Identification Number.
2. Two-digit code: Manufacturer's identification mark
3. Two-digit code: Tire size
4. Three-digit code: Tire type code (Optional)
5. Four numbers represent the week and year the tire was built. For example, the numbers 3103 means the 31st week of 2003. If these numbers are missing, then look on the other sidewall of the tire.

③ Tire ply composition and material

The number of layers or plies of rubber-coated fabric in the tire. Tire manufacturers also must indicate the materials in the tire, which include steel, nylon, polyester, and others.

④ Maximum permissible inflation pressure

This number is the greatest amount of air pressure that should be put in the tire. Do not exceed the maximum permissible inflation pressure.

⑤ Maximum load rating

This number indicates the maximum load in kilograms and pounds that can be carried by the tire. When replacing the tires on the vehicle, always use a tire that has the same load rating as the factory installed tire.

⑥ Term of "tubeless" or "tube type"
Indicates whether the tire requires an inner tube ("tube type") or not ("tubeless").

⑦ The word "radial"
The word "radial" is shown, if the tire has radial structure.

⑧ Manufacturer or brand name
Manufacturer or brand name is shown.

Other tire-related terminology:

In addition to the many terms that are defined throughout this section, Intended Outboard Sidewall is (1) the sidewall that contains a whitewall, bears white lettering or bears manufacturer, brand and/or model name molding that is higher or deeper than the same molding on the other sidewall of the tire, or (2) the outward facing sidewall of an asymmetrical tire that has a particular side that must always face outward when mounted on a vehicle.

TYPES OF TIRES

WARNING

- **When changing or replacing tires, be sure all four tires are of the same type (Example: Summer, All Season or Snow) and construction. A NISSAN certified LEAF dealer may be able to help you with information about tire type, size, speed rating and availability.**
- **Always use tires of the same type, size, brand, construction and tread pattern on all four wheels. Failure to do so may result in a circumference difference between tires on the front and rear axles which can cuase the VDC system to malfunction resulting in personal injury or death, excessive tie wear and may damage the transmission and differential gears.**
- **Replacement tires may have a lower speed rating than the factory equipped tires, and may not match the potential maximum vehicle speed. Never exceed the maximum speed rating of the tire.**
- **Replacing tires with those not originally specified by NISSAN could affect the proper operation of the TPMS.**
- **For additional information regarding tires, refer to "Important Tire Safety Information" (US) or "Tire Safety Information" (Canada) in the Warranty Information Booklet.**

All season tires

NISSAN specifies all season tires on some models to provide good performance all year, including snowy and icy road conditions. All Season tires are identified by ALL SEASON and/or M&S (Mud and Snow) on the tire sidewall. Snow tires have better snow traction than All Season tires and may be more appropriate in some areas.

Summer tires

NISSAN specifies summer tires on some models to provide superior performance on dry roads. Summer tire performance is substantially reduced in snow and ice. Summer tires do not have the tire traction rating M&S on the tire sidewall.

If you plan to operate your vehicle in snowy or icy conditions, NISSAN recommends the use of SNOW tires or ALL SEASON tires on all four wheels.

Snow tires

If snow tires are needed, it is necessary to select tires equivalent in size and load rating to the original equipment tires. If you do not, it can adversely affect the safety and handling of your vehicle.

Generally, snow tires will have lower speed ratings than factory equipped tires and may not match the potential maximum vehicle speed. Never exceed the maximum speed rating of the tire.

If you install snow tires, they must be the same size, brand, construction and tread pattern on all four wheels.

For additional traction on icy roads, studded tires may be used. However, some U.S. states and Canadian provinces prohibit their use. Check local, state and provincial laws before installing studded tires. Skid and traction capabilities of studded snow tires, on wet or dry surfaces, may be poorer than that of non-studded snow tires.

TIRE CHAINS

Use of tire chains may be prohibited according to location. Check the local laws before installing tire chains. When installing tire chains, make sure they are the proper size for the tires on your vehicle and are installed according to the chain manufacturer's suggestions.

Use only SAE Class S chains. Class "S" chains are used on vehicles with restricted tire to vehicle clearance. Vehicles that can use Class "S" chains are designed to meet the SAE standard minimum clearances between the tire and the closest vehicle suspension or body component required to accommodate the use of a winter traction device (tire chains or cables). The minimum clearances are determined using the factory equipped tire size. Other types may damage your vehicle.

Use chain tensioners when recommended by the tire chain manufacturer to ensure a tight fit. Loose end links of the tire chain must be secured or removed to prevent the possibility of whipping action damage to the fenders or underbody. If possible, avoid fully loading your vehicle when using tire chains. In addition, drive at a reduced speed. Otherwise, your vehicle may be damaged and/or vehicle handling and performance may be adversely affected.

Tire chains must be installed only on the front wheels and not on the rear wheels.

Do not use tire chains on dry roads. Driving with tire chains in such conditions can cause damage to the various mechanisms of the vehicle due to some overstress.

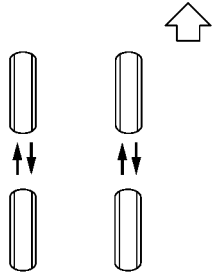

CHANGING WHEELS AND TIRES

Tire rotation

NISSAN recommends rotating the tires every 5,000 miles (8,000 km).

As soon as possible, tighten the wheel nuts to the specified torque using a torque wrench.

Wheel nut tightening torque:
83 ft-lb (112 N·m)

The wheel nuts must be kept tightened to the specification at all times. It is recommended that wheel nuts be tightened to the specification at each tire rotation interval.

WARNING

- **After rotating the tires, check and adjust the tire pressure.**
- **Retighten the wheel nuts when the vehicle has been driven for 600 miles (1,000 km) (also in cases of a flat tire, etc.).**
- **For additional information regarding tires, refer to "Important Tire Safety Information" (US) or "Tire Safety Information" (Canada) in the Warranty Information Booklet.**

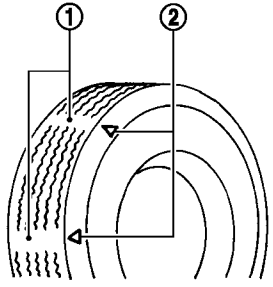

Tire wear and damage

1. Wear indicator
2. Wear indicator location mark

WARNING

- **Tires should be periodically inspected for wear, cracking, bulging or objects caught in the tread. If excessive wear, cracks, bulging or deep cuts are found, the tire(s) should be**

replaced.

- **The original tires have built-in tread wear indicators. When wear indicators are visible, the tire(s) should be replaced.**
- **Tires degrade with age and use. Have tires, over 6 years old checked by a qualified technician, because some tire damage may not be obvious. Replace the tires as necessary to prevent tire failure and possible personal injury.**
- **For additional information regarding tires, refer to "Important Tire Safety Information" (US) or "Tire Safety Information" (Canada) in the Warranty Information Booklet.**

Replacing wheels and tires

When replacing a tire, use the same size, tread design, speed rating and load carrying capacity as originally equipped. For additional information, refer to "Specifications" in the "Technical and consumer information" section of this manual for recommended types and sizes of tires and wheels.

WARNING

- **The use of tires other than those recommended or the mixed use of tires of different brands, construction (bias, bias-belted or radial), or tread patterns can adversely affect the ride, braking, handling, Vehicle Dynamic Control (VDC) system, ground clearance, body-to-tire clearance, tire chain clearance, speedometer calibration, headlight aim and bumper height. Some of these effects may lead to accidents and could result in serious personal injury.**
- **If your vehicle was originally equipped with four tires that were the same size and you are only replacing two of the four tires, install the new tires on the rear axle. Placing new tires on the front axle may cause loss of vehicle control in some driving conditions and cause an accident and personal injury.**
- **If the wheels are changed for any reason, always replace with wheels which have the same off-set dimension. Wheels of a different off-set could cause premature tire wear, degrade vehicle handling characteristics, affect the VDC system and/or interference with the brake discs. Such interference can lead to decreased braking efficiency and/or early brake pad/shoe wear. For additional information on wheel-off set dimensions, refer to "Wheels and tires" in the "Technical and consumer information" section of this manual.**
- **When replacing a wheel without the TPMS such as the spare tire, the TPMS will not function when a wheel is replaced, the TPMS will not function and the low tire pressure warning light will flash for approximately 1 minute. The light will remain on after 1 minute. It is recommended that you visit a NISSAN certified LEAF dealer for this service.**
- **Replacing tires with those not originally specified by NISSAN could affect the proper operation of the TPMS.**

- **The TPMS sensor may be damaged if it is not handled correctly. Be careful when handling the TPMS sensor.**
- **When replacing the TPMS sensor, the ID registration may be required. It is recommended that you visit a NISSAN certified LEAF dealer for ID registration.**
- **Do not use a valve stem cap that is not specified by NISSAN. The valve stem cap may become stuck.**
- **Be sure that the valve stem caps are correctly fitted. Otherwise the valve may be clogged up with dirt and cause a malfunction or loss of pressure.**
- **Do not install a damaged or deformed wheel or tire even if it has been repaired. Such wheels or tires could have structural damage and could fail without warning.**
- **The use of retread tire is not recommended.**
- **For additional information regarding tires, refer to "Important Tire Safety Information" (US) or "Tire Safety Information" (Canada) in the Warranty Information Booklet.**

Wheel balance

Unbalanced wheels may affect vehicle handling and tire life. Even with regular use, wheels can get out of balance. Therefore, they should be balanced as required.

Wheel balance service should be performed with the wheels off the vehicle. Spin balancing the wheels on the vehicle could lead to mechanical damage.

For additional information regarding tires, refer to "Important Tire Safety Information" (US) or "Tire Safety Information" (Canada) in the Warranty Information Booklet.

Care of wheels

For additional information on care of wheels, refer to "Cleaning exterior" in the "Appearance and care" section of this manual.

EMERGENCY TIRE PUNCTURE REPAIR KIT

The emergency tire puncture repair kit (Emergency Tire Sealant) is supplied with the vehicle instead of a spare tire. It can be used to temporarily repair minor tire punctures.

If possible, have the vehicle towed to a facility that can repair or replace the flat tire. Using the emergency tire puncture repair kit may cause a malfunction of the tire pressure sensor and cause the low tire pressure warning light to illuminate.

For additional information, refer to "Flat tire" in the "In case of emergency" section of this manual.

9 Technical and consumer information

Recommended fluids/lubricants and capacities . . . 9-2
Air conditioning system refrigerant and lubricant recommendations . . . 9-3
Specifications . . . 9-4
Charging system . . . 9-4
Motor . . . 9-5
Wheels and tires . . . 9-5
Dimensions and weights . . . 9-5
When traveling or registering in another country . . . 9-6
Vehicle identification . . . 9-6
Vehicle Identification Number (VIN) plate . . . 9-6
Vehicle identification number (chassis number) . . . 9-6
Traction motor serial number . . . 9-7
F.M.V.S.S./C.M.V.S.S certification label . . . 9-7
Emission control information label . . . 9-7
Tire and Loading Information label . . . 9-8
Air conditioner specification label . . . 9-8
Installing front license plate . . . 9-8
Vehicle loading information . . . 9-9
Terms . . . 9-9
Vehicle load capacity . . . 9-10
Loading tips . . . 9-12
Measurement of weights . . . 9-12
Towing a trailer . . . 9-13
Flat towing . . . 9-13
Uniform tire quality grading . . . 9-13
Treadwear . . . 9-13
Traction AA, A, B and C . . . 9-14
Temperature A, B and C . . . 9-14
Reporting safety defects . . . 9-14
Telematics overview (models with Navigation System) . . . 9-15
Telematic Control Unit Gen2K . . . 9-17
Event Data Recorders (EDR) . . . 9-19
Additional Data Recording (on vehicles equipped with optional ProPILOT™ Assist) . . . 9-20
Owner's Manual/Service Manual order information . . . 9-20
Charging information . . . 9-21
Cold tire pressures . . . 9-22

RECOMMENDED FLUIDS/ LUBRICANTS AND CAPACITIES

The following are approximate capacities. The actual refill capacities may be slightly different. When refilling, follow the procedure that is described in the "Maintenance and do-it-yourself" section to determine the proper refill capacity.

Fluid type		Capacity (approximate)			Recommended Fluids/Lubricants
		Metric Measure	US Measure	Imperial Measure	
Cooling system coolant	With reservoir	5.3 L	5-5/8 qt	4-5/8 qt	• Pre-diluted Genuine NISSAN Long Life Antifreeze/Coolant (blue) or equivalent
	Reservoir	0.5 L	1/2 qt	1/2 qt	
Reduction gear fluid		1.4 L	1-1/2 qt	1-1/4 qt	• Genuine NISSAN Matic S ATF • Using reduction gear fluid other than Genuine NISSAN Matic S ATF will cause deterioration in driveability and reduction gear durability, and may damage the reduction gear, which is not covered by the NISSAN's New Vehicle Limited Warranty.
Brake fluid		Refill to the proper level according to the instructions in the "Maintenance and do-it-yourself" section.			• Genuine NISSAN Super Heavy Duty Brake Fluid (Available in mainland U.S.A. through a NISSAN certified LEAF dealer) or equivalent DOT 3
Multi-purpose grease		—	—	—	• NLGI No. 2 (Lithium soap base)
Air conditioning system refrigerant		—	—	—	• HFC-134a (R-134a) • For additional information, refer to "Air conditioner specification label" in this section.
Air conditioning system lubricants		—	—	—	• With heater pump use NISSAN A/C System Oil ND-OIL11 or equivalent. • Without heater pump use NISSAN A/C System Oil AE10 or equivalent.
Windshield washer fluid (US)		2.5 L	5/8 gal	1/2 gal	• Genuine NISSAN Windshield Washer Concentrate Cleaner & Antifreeze fluid or equivalent
Windshield washer fluid (Canada)		4.5 L	1–1/4 gal	1 gal	• Genuine NISSAN Windshield Washer Concentrate Cleaner & Antifreeze fluid or equivalent

AIR CONDITIONING SYSTEM REFRIGERANT AND LUBRICANT RECOMMENDATIONS

The air conditioning system in your NISSAN vehicle must be charged with the refrigerant, HFC-134a (R-134a), and the compressor oil, ND-OIL11 (with heater pump), AE10 (without heater pump) or the equivalent.

CAUTION

The use of any other refrigerant or oil will cause severe damage to the air conditioning system and will require the replacement of all air conditioner system components.

The refrigerant, HFC-134a (R-134a), in your NISSAN vehicle will not harm the earth's ozone layer. Although this refrigerant does not affect the earth's atmosphere, certain governmental regulations require the recovery and recycling of any refrigerant during automotive air conditioning system service. A NISSAN certified LEAF dealer has the trained technicians and equipment needed to recover and recycle your air conditioning system refrigerant.

It is recommended that you visit a NISSAN certified LEAF dealer when servicing your air conditioning system.

SPECIFICATIONS

CHARGING SYSTEM

Rated input voltage	AC120V (single phase), AC240V (single phase)
Rated input frequency	60Hz
Maximum rated current	30A
Charging modes/Types of connection	Mode 2/ Case B (EVSE) Mode 3/ Case B/C (charging device, public charging stand) Mode 4/ Case C (Quick charge)
Required installation (over current protection)	The methods of protection against over current and over voltage shall be in accordance with national codes. Suitable over current protection devices for the wiring of houses or buildings shall be installed.
IP Degree	IP44: When the Genuine NISSAN EVSE is connected to the charging port
Operating temperature	Same as vehicle operating temperature
Storage temperature	Same as vehicle storage temperature
Rated input voltage Rate input frequency	AC220V (single phase), AC240V (single phase) 60Hz
Applicable standards	SAE J1772: 2010 EN61851-1: 2011 EN61851-21: 2002 IEC61851-1: 2010 IEC61851-21: 2001 EN61000-6-1: 2007 EN61000-6-3: 2007
Adapters	Do not use an extension cable or electrical adaptor except for Nissan Genuine Adapter.

MOTOR

Model	EM57

WHEELS AND TIRES

Road wheel

Type	Size	Offset in (mm)
Steel	16 × 6 1/2JJ	1.57 (40)
Aluminum	17 × 6 1/2J	1.77 (45)

Tire

Tire	Size
All season	P205/55R16 89H
All season	P215/50R17 90V

DIMENSIONS AND WEIGHTS

Overall length	in (mm)	176.3 (4,478)
Overall length W/Lic Plate	in (mm)	176.8 (4,490)
Overall width	in (mm)	70.4 (1,789)
Overall width W/OS Mirrors	in (mm)	79.9 (2,029)
Overall height(Roof)		
16 inch wheels	in (mm)	60.6 (1,539)
17 inch wheels	in (mm)	60.8 (1,545)
Overall height(Antenna)		
16 inch wheels	in (mm)	61.5 (1,561)
17 inch wheels	in (mm)	61.7 (1,567)
Front tread		
16 inch wheels	in (mm)	60.6 (1,540)
17 inch wheels	in (mm)	60.2 (1,530)
Rear tread		
16 inch wheels	in (mm)	61.2 (1,555)
17 inch wheels	in (mm)	60.8 (1,545)
Wheelbase	in (mm)	106.3 (2,700)
	lbs. (kg)	Refer to the F.M.V.S.S. or C.M.V.S.S. certification label on the driver's side center pillar.
Front	lbs. (kg)	
Rear	lbs. (kg)	

WHEN TRAVELING OR REGISTERING IN ANOTHER COUNTRY

When planning to travel in another country, you should first find out if the charging equipment is compatible with that country's electrical system.

When transferring the registration of your vehicle to another country, state, province or district, it may be necessary to modify the vehicle to meet local laws and regulations.

The laws and regulations for motor vehicle safety standards vary according to the country, state, province or district; therefore, vehicle specifications may differ.

When any vehicle is to be taken into another country, state, province or district and registered, its modifications, transportation, and registration are the responsibility of the user. NISSAN is not responsible for any inconvenience that may result.

VEHICLE IDENTIFICATION

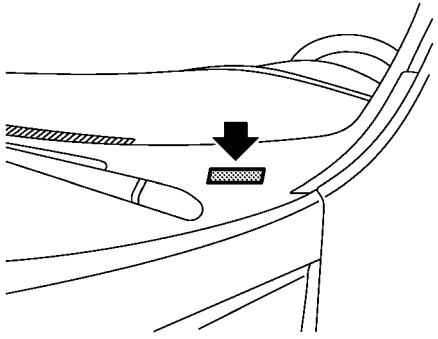

VEHICLE IDENTIFICATION NUMBER (VIN) PLATE

The vehicle identification number plate is attached as shown. This number is the identification for your vehicle and is used in the vehicle registration.

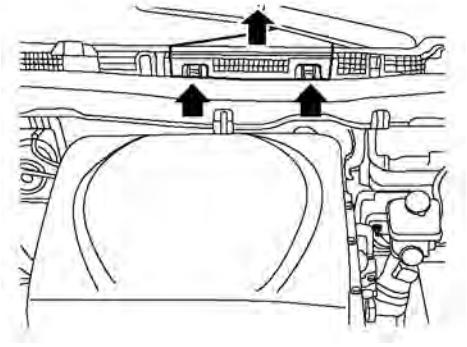

VEHICLE IDENTIFICATION NUMBER (CHASSIS NUMBER)

The vehicle identification number is located as shown.

Remove the cover to access the number.

TRACTION MOTOR SERIAL NUMBER

The serial number of the traction motor is stamped on the traction motor as shown.

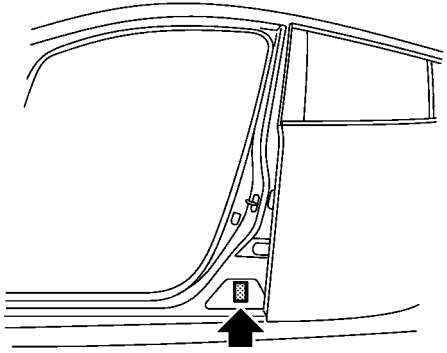

F.M.V.S.S./C.M.V.S.S CERTIFICATION LABEL

The Federal/Canadian Motor Vehicle Safety Standards (F.M.V.S.S./C.M.V.S.S.) certification label is affixed as shown. This label contains valuable vehicle information, such as: Gross Vehicle Weight Ratings (GVWR), Gross Axle Weight Rating (GAWR), month and year of manufacture, Vehicle Identification Number (VIN), etc. Review it carefully.

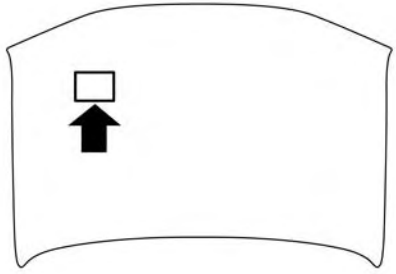

EMISSION CONTROL INFORMATION LABEL

The emission control information label is attached to the underside of the hood as shown in the illustration.

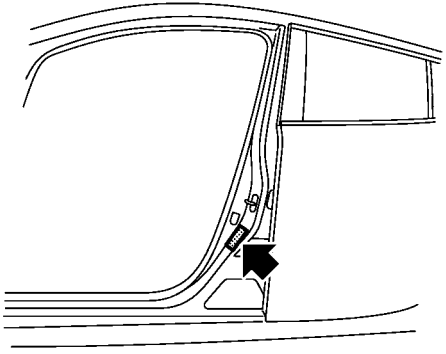

TIRE AND LOADING INFORMATION LABEL

The cold tire pressure is shown on the Tire and Loading Information label affixed to the driver's side center pillar as shown.

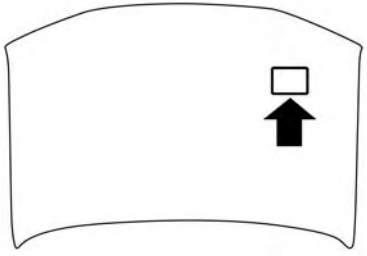

AIR CONDITIONER SPECIFICATION LABEL

The air conditioner specification label is attached to the underside of the hood as shown in the illustration.

INSTALLING FRONT LICENSE PLATE

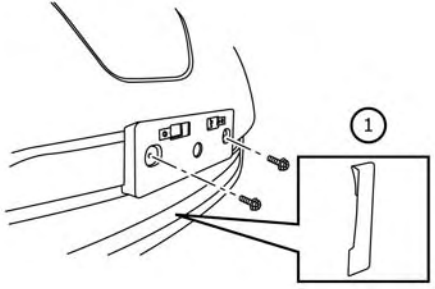

Perform the following procedure to mount the license plate.

Before mounting the license plate, confirm that the following parts are enclosed in the plastic bag.

- License plate bracket ①
- Screw ×2

1. Adjust the license plate bracket ① at the location (small dimples).
2. Mark along both sides of the mounting holes and license plate screw holes using a felt-tip pen.

3. Remove the license plate bracket ① and connect the arcs from the ovals. Mark the point in the center of each oval. These are the screw installation locations.
4. Install the license plate with two 0.39 in (10 mm) screws.

VEHICLE LOADING INFORMATION

WARNING

- **It is extremely dangerous to ride in the cargo area inside the vehicle. In a collision, people riding in these areas are more likely to be seriously injured or killed.**
- **Do not allow people to ride in any area of your vehicle that is not equipped with seats and seat belts.**
- **Be sure everyone in your vehicle is in a seat and using a seat belt properly.**

TERMS

It is important to familiarize yourself with the following terms before loading your vehicle:

- Curb Weight (actual weight of your vehicle) - vehicle weight including: standard and optional equipment, fluids and emergency tools. This weight **does not** include passengers and cargo.
- GVW (Gross Vehicle Weight) - curb weight plus the combined weight of passengers and cargo.
- GVWR (Gross Vehicle Weight Rating) - maximum total combined weight of the unloaded vehicle, passengers, luggage, hitch, trailer tongue load and any other optional equipment. This information is located on the F.M.V.S.S./C.M.V.S.S. label.
- GAWR (Gross Axle Weight Rating) - maximum weight (load) limit specified for the front or rear axle.
- This information is located on the F.M.V.S.S./C.M.V.S.S. label.
- GCWR (Gross Combined Weight Rating) - The maximum total weight rating of the vehicle, passengers, cargo, and trailer.
- Vehicle Capacity Weight, Load limit, Total load capacity - maximum total weight limit specified of the load

(passengers and cargo) for the vehicle. This is the maximum combined weight of occupants and cargo that can be loaded into the vehicle. If the vehicle is used to tow a trailer, the trailer tongue weight must be included as part of the cargo load. This information is located on the Tire and Loading Information label.

- Cargo capacity - permissible weight of cargo, the subtracted weight of occupants from the load limit.

VEHICLE LOAD CAPACITY

Do not exceed the load limit of your vehicle shown as "The combined weight of occupants and cargo" on the Tire and Loading Information label. Do not exceed the number of occupants shown as "Seating Capacity" on the Tire and Loading Information label.

To get "the combined weight of occupants and cargo", add the weight of all occupants, then add the total luggage weight. Examples are shown in the following illustration.

Steps for determining correct load limit

Example

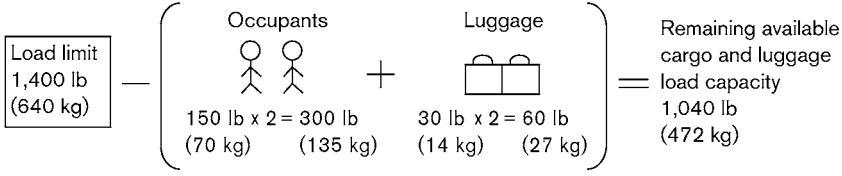

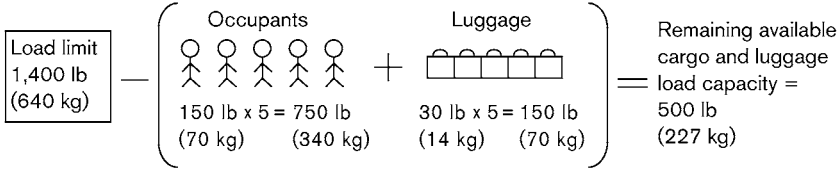

1. Locate the statement "The combined weight of occupants and cargo should never exceed XXX kg or XXX lbs." on your vehicle's Tire and Loading Information label.
2. Determine the combined weight of the driver and passengers that will be riding in your vehicle.
3. Subtract the combined weight of the driver and passengers from XXX kg or XXX lbs.
4. The resulting figure equals the available amount of cargo and luggage load capacity. For example, if the XXX amount equals 1400 lbs. and there will be five 150 lbs. passengers in your vehicle, the amount of available cargo and luggage load capacity is 650 lbs. (1400 – 750 (5 x 150) = 650 lbs.) or (640 – 340 (5 x 70) = 300 kg.)
5. Determine the combined weight of luggage and cargo being loaded on the vehicle. That weight may not safely exceed the available cargo and luggage load capacity calculated in Step 4.

Before driving a loaded vehicle, confirm that you do not exceed the Gross Vehicle Weight Rating (GVWR) or the Gross Axle Weight Rating

(GAWR) for your vehicle. For additional information, refer to "Measurement of weights" in this section.

Also check tires for proper inflation pressures. For additional information, refer to "Tire and Loading Information label" in this section.

LOADING TIPS

- The GVW must not exceed the GVWR or GAWR as specified on the F.M.V.S.S./C.M.V.S.S. certification label.
- Do not load the front and rear axle to the GAWR. Doing so will exceed the GVWR.

WARNING

- **Properly secure all cargo with ropes or straps to help prevent it from sliding or shifting. Do not place cargo higher than the seatbacks. In a sudden stop or collision, unsecured cargo could cause personal injury.**
- **Do not load your vehicle any heavier than the GVWR or the maximum front and rear GAWRs. If you do, parts of your vehicle can break, tire damage could occur, or it can change the way your vehicle handles. This could result in loss of control and cause personal injury.**
- **Overloading not only can shorten the life of your vehicle and the tire, but can cause unsafe vehicle handling and longer braking distances. This may cause a premature tire failure, which could result in a serious accident and personal injury. Failures caused by overloading are not covered by the vehicle's warranty.**

MEASUREMENT OF WEIGHTS

Secure loose items to prevent weight shifts that could affect the balance of your vehicle. When the vehicle is loaded, drive to a scale and weigh the front and the rear wheels separately to determine axle loads. Individual axle loads should not exceed either of the Gross Axle Weight Ratings (GAWR). The total of the axle loads should not exceed the Gross Vehicle Weight Rating (GVWR). These ratings are given on the vehicle certification label. If weight ratings are exceeded, move or remove items to bring all weights below the ratings.

TOWING A TRAILER

Do not tow a trailer with your vehicle.

FLAT TOWING

Towing your vehicle with all four wheels on the ground is sometimes called flat towing. This method is typically used when towing a vehicle behind a recreational vehicle, such as a motor home.

CAUTION

- **Failure to follow these guidelines can result in severe reduction gear damage.**
- **DO NOT tow this vehicle with all four wheels on the ground (flat towing).**
- **For emergency towing procedures refer to "Towing your vehicle" in the "In case of emergency" section of this manual.**

UNIFORM TIRE QUALITY GRADING

DOT (Department Of Transportation) Quality Grades: All passenger car tires must conform to federal safety requirements in addition to these grades.

Quality grades can be found where applicable on the tire sidewall between tread shoulder and maximum section width. For example:

Treadwear 200 Traction AA Temperature A

TREADWEAR

The treadwear grade is a comparative rating based on the wear rate of the tire when tested under controlled conditions on a specified government test course. For example, a tire graded 150 would wear one and one-half (1 1/2) times as well on the government course as a tire graded 100. The relative performance of tires depends upon actual conditions of their use however, and may depart significantly from the norm due to variations in driving habits, service practices and differences in road characteristics and climate.

TRACTION AA, A, B AND C

The traction grades, from highest to lowest, are AA, A, B and C. Those grades represent the tire's ability to stop on wet pavement as measured under controlled conditions on specified government test surfaces of asphalt and concrete. A tire marked C may have poor traction performance.

WARNING

The traction grade assigned to this tire is based on straight-ahead braking traction tests, and does not include acceleration, cornering, hydroplaning, or peak traction characteristics.

TEMPERATURE A, B AND C

The temperature grades A (the highest), B, and C, representing the tire's resistance to the generation of heat and its ability to dissipate heat when tested under controlled conditions on a specified indoor laboratory test wheel. Sustained high temperature can cause the material of the tire to degenerate and reduce tire life, and excessive temperature can lead to sudden tire failure. The grade C corresponds to a level of performance which all passenger car tires must meet under the Federal Motor Vehicle Safety Standard No. 109. Grades B and A represent higher levels of performance on the laboratory test wheel than the minimum required by law.

WARNING

The temperature grade for this tire is established for a tire that is properly inflated and not overloaded. Excessive speed, under-inflation, or excessive loading, either separately or in combination, can cause heat build-up and possible tire failure.

REPORTING SAFETY DEFECTS

For USA

If you believe that your vehicle has a defect which could cause a crash or could cause injury or death, you should immediately inform the National Highway Traffic Safety Administration (NHTSA) in addition to notifying NISSAN.

If NHTSA receives similar complaints, it may open an investigation, and if it finds that a safety defect exists in a group of vehicles, it may order a recall and remedy campaign. However, NHTSA cannot become involved in individual problems between you, your dealer, or NISSAN.

To contact NHTSA, you may call the Vehicle Safety Hotline toll-free at 1-888-327-4236
(TTY: 1-800-424-9153);
go to http://www.safercar.gov; or write to: Administrator, NHTSA, 400 Seventh Street, SW., Washington, D.C. 20590. You can also obtain other

information about motor vehicle safety from http://www.safercar.gov.

You may notify NISSAN by contacting our Consumer Affairs Department, toll-free, at 1-800-NISSAN-1.

For Canada

If you believe that your vehicle has a defect which could cause a crash or could cause injury or death, you should immediately inform Transport Canada in addition to notifying NISSAN.

If Transport Canada receives complaints, it may open an investigation, and if it finds that a safety defect exists in a group of vehicles, it may request that NISSAN conduct a recall campaign. However, Transport Canada cannot become involved in individual problems between you, your dealer, or NISSAN.

You may contact Transport Canada's Defect Investigations and Recalls Division toll free at 1-800-333-0510. You may also report safety defects online at: https://wwwapps.tc.gc.ca/ Saf-Sec-Sur/7/PCDB-BDPP/fc-cp.aspx?lang=eng (English speakers) or https://wwwapps.tc.gc.ca/Saf-Sec-Sur/7/PCDB-BDPP/fc-cp.aspx?lang=fra (French speakers)

Additional information concerning motor vehicle safety may be obtained from Transport Canada's Road Safety Information Centre at 1-800-333-0371 or online at www.tc.gc.ca/roadsafety (English speakers) or www.tc.gc.ca/securiteroutiere (French speakers).

To notify NISSAN of any safety concerns please contact our Consumer Information Centre toll free at 1-800-387-0122.

TELEMATICS OVERVIEW (MODELS WITH NAVIGATION SYSTEM)

In addition to Event Data Recorders (EDRs) mentioned in this Owner's Manual, this vehicle is equipped with electronic modules that monitor, control and record data concerning various vehicle systems, including the motor, batteries, braking and electrical systems. Other electronic modules record information concerning driving conditions, including idling, braking, acceleration, trip and other related data, information about your use of the car and its features such as air conditioner or headlight usage, diagnostic trouble codes, vehicle charging, vehicle speed, direction and/or location.

Some of this data is stored by the vehicle for use during vehicle servicing. Other data concerning your vehicle's operation and performance is wirelessly transmitted by cellular connection through the vehicle onboard telematics system upon vehicle start-up or at other intervals to NISSAN. This data may be used by NISSAN for various purposes, including: to provide you with NissanConnect® EV & Services (For additional information, refer to "NissanConnect® Manual (for Leaf)".);

troubleshooting; evaluation of your vehicle's quality, functionality and performance; analysis and research by NISSAN designed to, among other things, optimize performance of future electric vehicles including improvements in future battery life; to offer you new or additional products or services; and as otherwise may be required by law. Such data may be shared with NISSAN's parents, subsidiaries, affiliates, successors or assignees; authorized NISSAN certified LEAF dealers; NISSAN's marketing partners; your fleet company, if your vehicle is a fleet vehicle; your rental company, if your vehicle is a rental vehicle; and third party service providers such as cellular, information systems and data management providers.

State and provincial laws allow access and use of data recorded by vehicle devices with the consent of the vehicle owner or pursuant to subscription agreement. While you are not required to allow such access and use, if you do not so agree NISSAN may be unable under applicable law to activate the vehicle telematics system in your vehicle, and certain features of your vehicle which are dependent on vehicle telematics will not operate as intended or designed. These may include features such as automatic charging station map updates, remote battery state of charge check, charging complete notice, remote plug in reminder, remote charging on, remote climate control on, drive route planning, driving tips to improve range, driving history, billing simulation, ECO ranking, ECO forest, maintenance reminders, etc. Other features that may be developed and offered by NISSAN in the future may also not function without telematics data transmission.

NissanConnect® EV & Services telematics services are provided by NISSAN pursuant to a subscription services agreement covering your vehicle. This agreement is necessary for all owners. This agreement, and an explanation of its terms and conditions, can be found at the NISSAN Owner's Portal webpage. Further, the operator of the vehicle must also touch [OK] on the Navi screen to indicate assent each time he or she starts the car. If you decide at any time that you do not want your vehicle to transmit data to NISSAN, you can deactivate the telematics account associated with this vehicle by canceling the subscription services agreement by visiting the NISSAN Owner's Portal Webpage or calling NISSAN at 1-877-NOGASEV (1-877-664-2738). The service can be reactivated later upon request if you choose. Simply visit the same website or call the number above. Alternatively, you can turn off the transmission of certain categories of data through the use of settings found in the navigation system under Menu, NissanConnect® EV & Services, Vehicle Information Sharing with NISSAN. Note, turning off "Vehicle Information Sharing with NISSAN" will only disable the automatic sharing of information at vehicle start-up. Certain categories of data may still be transmitted if vehicle telematics features are accessed either in the vehicle or remotely.

Your agreement to the transmission and use of data by NISSAN can be provided in various ways. The vehicle is equipped with a "pop up" screen on the vehicle navigation system that will ask for your consent to this data transfer. A version of the following message will appear: "Pursuant to subscription agreement, your vehicle wirelessly transmits recorded vehicle data to NISSAN for various purposes, including NissanConnect® EV & Services, product evaluation, research and development. By

touching OK, you consent to the transmission and use of your vehicle data. See Owner's Manual or NISSAN Owner's portal webpage for terms and details." If you touch [OK], your vehicle will transmit data as designed in connection with the vehicle telematics system. If you touch [Decline] your vehicle will not transmit data. However, the telematics features referenced above, and perhaps others, will not be available to you. The vehicle's static navigation system will remain operational, and you will be able to access your radio and climate controls.

Telematics features are dependent on cellular data transmission. Some areas may have limited or no cellular connectivity, resulting in a loss or interruption of data transmission and, as a result, certain features may be temporarily unavailable. Even if areas with good signal reception, cellular connectivity can be adversely affected by things such as tall buildings, apartments, tunnels, underground parking, mountainous areas, etc. Even if the signal strength bar of the in-vehicle data communication module indicates good reception, connectivity may be disrupted. This does not indicate a malfunction. Operate the system again after a few minutes to restore connectivity. NissanConnect® EV & Services telematics features are offered as a convenience to the vehicle owner. NISSAN is not responsible for, and owner assumes all risk of, interruptions in service or errors based on incomplete or inaccurate data. NissanConnect® EV & Services communications may be received at a verified e-mail address or by SMS/text messaging-enabled mobile phone. Standard text rates and/or data usage may apply depending on your carrier.

If your vehicle's telematics account is active, and you are not the original owner, please contact NISSAN at the website or phone number above as soon as possible to update the telematics enrollment information. Upon sale of the vehicle, please contact NISSAN at the website or phone number above so that NISSAN's records may be updated. NissanConnect® EV & Services subscription services will automatically terminate at the end of the initial free term if you do not wish to renew your subscription agreement at the prices then in effect.

TELEMATIC CONTROL UNIT GEN2K

A. INTRODUCTION

This product Telematic Control Unit Gen2K incorporates the following software:

1. the software developed by, or developed for, Ficosa International, S.A. ("Ficosa"),
2. the software owned by third party and licensed to Ficosa,the software owned by third party and licensed to Ficosa,
3. the software licensed under the GNU GENERAL PUBLIC LICENSE, Version 2 ("GPL"),the software licensed under the GNU GENERAL PUBLIC LICENSE, Version 2 ("GPL"),
4. the software licensed under the GNU LIBRARY GENERAL PUBLIC LICENSE, Version 2.0 or the GNU LESSER GENERAL PUBLIC LICENSE, Version 2.1 (collectively "LGPL"), the Mozilla Public license v2 ("MPL"), the GPL-2.0 license with-OpenSSL-exception ("GPLOpenSSL") and GNU GENERAL PUBLIC LICENSE, Version 3 with GCC exception (together with the GPL software, jointly "Copyleft Software"), and/or
5. open sourced software licensed under terms and conditions other than Copyleft Software.

For the software classified as (3) or (4) above, a copy of the license text is included with the source code in the URL indicated below, and please also refer to the terms and conditions of Copyleft Software licenses at the websites listed below:

GPL: http://www.gnu.org/licenses/old-licenses/gpl-2.0.html
and https://www.gnu.org/licenses/gpl-3.0.en.html

LGPL: http://www.gnu.org/licenses/old-licenses/lgpl-2.1.html and http://www.gnu.org/licenses/old-licenses/lgpl-2.0.html

MPL:
https://www.mozilla.org/en-US/MPL/2.0/

GPL-2.0-with-OpenSSL-exception:
https://gitlab.com/cryptsetup/cryptsetup/blob/master/COPYING

GPLv3 GCC Exception:
https://www.gnu.org/licenses/gcc-exception-3.1.en.html

The software classified as (3) and (4) above are copyrighted by multiple people.

Please refer to the websites below regarding the copyright notices of those people.

https://www.ficosa.com/software/opensource/

The software licensed under the licenses indicated in (3) and (4) above ("Copyleft Software") is distributed in the hope that it will be useful, but WITHOUT ANY WARRANTY, without even the implied warranty of MERCHANTABILITY or FITNESS FOR A PARTICULAR PURPOSE.

For at least three (3) years from delivery of a device embedding the above product, Ficosa will give to any third party who contacts us at the Contact Information provided below, for a charge no more than our cost of physically performing source code distribution, a complete machine-readable copy of the source code corresponding to the Copyleft Software indicated above. When requesting this source code, please specify Product: Telematic Control Unit Gen2K and version Cx9.

Furthermore, source code and licenses corresponding to the Copyleft Software listed above is freely available to you and any member of the public at the website listed below:

https://www.ficosa.com/software/opensource/

Contact Information

For enquiries about open source software at FICOSA, please contact Ficosa's Compliance Officer by email: FOSS@ficosa.com

Please note that we are unable to answer any queries regarding source code details, etc.

In addition, it is necessary for end users to provide their own internet connection.

The end user is responsible for any connection or line charges incurred through browsing websites or downloading.

B. LICENSING ANC COPYRIGHT NOTICE INFORMATION

The software classified as (5) above contains various open sourced software ("OSS") listed in the below website. Please see the website indicted next for the terms and conditions of the licenses (OSS Licenses) and other information regarding the OSS contained this Product:

https://www.ficosa.com/software/opensource/

EVENT DATA RECORDERS (EDR)

This vehicle is equipped with an Event Data Recorder (EDR). The main purpose of an EDR is to record, in certain crash or near crash-like situations, such as an air bag deployment or hitting a road obstacle, data that will assist in understanding how a vehicle's systems performed. The EDR is designed to record data related to vehicle dynamics and safety systems for a short period of time, typically 30 seconds or less. The EDR in this vehicle is designed to record such data as:

- How various systems in your vehicle were operating;
- Whether or not the driver and passenger safety belts were buckled/fastened;
- How far (if at all) the driver was depressing the accelerator and/or brake pedal; and,
- How fast the vehicle was traveling.
- Sounds are not recorded.

These data can help provide a better understanding of the circumstances in which crashes and injuries occur.

NOTE:

EDR data are recorded by your vehicle only if a nontrivial crash situation occurs; no data are recorded by the EDR under normal driving conditions and no personal data (for example, name, gender, age and crash location) are recorded. However, other parties, such as law enforcement, could combine the EDR data with the type of personally identifying data routinely acquired during a crash investigation.

To read data recorded by an EDR, special equipment is required and access to the vehicle or the EDR is needed. In addition to the vehicle manufacturer and NISSAN certified LEAF dealer, other parties, such as law enforcement, that have the special equipment, can read the information if they have access to the vehicle or the EDR. EDR data will only be accessed with the consent of the vehicle owner or lessee or as otherwise required or permitted by law.

ADDITIONAL DATA RECORDING (ON VEHICLES EQUIPPED WITH OPTIONAL PROPILOT™ ASSIST)

If your vehicle is equipped with the optional ProPILOT Assist, it will also be equipped with supplemental data recording function intended to assist in understanding how ProPILOT Assist performs in certain non-trival crash or near-crash scenarios. Specifically, supplemental recording is designed to capture the following:

- Driver operational status of the accelerator, brakes, steering, etc.
- Detection status of a vehicle ahead and lane markers
- Vehicle information including distance to vehicle ahead and lateral position
- Information on the operation of the ProPILOT Assist and other crash avoidance features
- ProPILOT Assist malfunction diagnosis information
- External images from the multi-sensing front camera (Available only when the SRS air bag or IEB system is activated)

The ProPILOT Assist does not record conversations, sounds or images of the inside of the vehicle.

To read this supplemental data, special equipment is required and access to the vehicle or the recording unit is needed. This supplemental data will only be accessed with the consent of the vehicle owner or lessee or as otherwise required or permitted by law. If downloaded, NISSAN and third parties entrusted by

NISSAN may use the data recorded for the purpose of improving NISSAN's vehicle safety performance.

NISSAN and third parties entrusted by NISSAN will not disclose/provide the recorded data to a third party except:

- With the consent of the vehicle owner or with the consent of the lessee

- In response to an official request from law enforcement, court order, governmental agency, or other legally enforceable request.

- For research purposes after the data is modified such that it is no longer tied to a specific vehicle or vehicle owner (anonymized)

OWNER'S MANUAL/SERVICE MANUAL ORDER INFORMATION

Genuine NISSAN Service Manuals for this model year and prior can be purchased. A Genuine NISSAN Service Manual is the best source of service and repair information for your vehicle. This manual is the same one used by the factory trained technicians working at a NISSAN certified LEAF dealer. Genuine NISSAN Owner's Manuals can also be purchased.

For USA:

For current pricing and availability of Genuine **NISSAN Service Manuals,** contact:

www.nissan-techinfo.com

For current pricing and availability of Genuine **NISSAN Owner's Manuals,** contact:

1-800-247-5321

For Canada:

To purchase a copy of a Genuine NISSAN Service Manual or Owner's Manual for this model year and prior, please contact a NISSAN certified LEAF dealer. For the phone number and location of a NISSAN certified LEAF dealer in your area, call the NISSAN Information Center at 1-800-387-0122 and a bilingual NISSAN representative will assist you.

CHARGING INFORMATION

	Charge port	Charge connector	Control box	Power	Charging
NORMAL CHARGE (AC 220-240 volt)	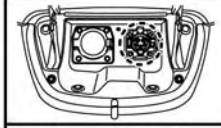	Normal charge connector			Use the charging device (AC 220-240 volt) that is installed in your home.
	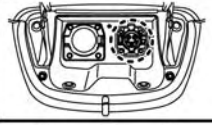	Normal charge connector			Use the L1 & L2-EVSE. Use only a 220-240 volt, 50 amp, dedicated outlet installed by a qualified electrician.
TRICKLE CHARGE (AC 110-120 volt)	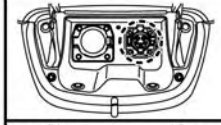	Normal charge connector			Use the L1 & L2-EVSE. Use only a 110-120 volt, 15 amp, dedicated outlet installed by a qualified electrician.
	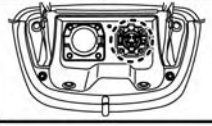	Normal charge connector	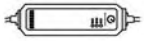		Use the L1-EVSE. Use only a 110-120 volt, 15 amp, dedicated outlet installed by a qualified electrician.
QUICK CHARGE (If so equipped) See "CH. How to quick charge" in the "CH. Charging" section.		Quick charge connector			Public charging stations

COLD TIRE PRESSURES

The label is typically located on the driver side center pillar or on the driver's door. For additional information, refer to "Wheels and tires" in the "Maintenance and do-it-yourself" section of this manual.

NOTES

NOTES

10 Index

1

12-volt battery 8-12

A

ABS (Anti-lock Braking System) 5-136
ADDITIONAL DATA RECORDING (on vehicles equipped with optional ProPILOT Assist) 9-20
Advanced air bag system 1-50
Air bag system. 1-50, 1-52, 1-58
Air bag warning labels 1-61
Air bag warning light 1-61, 2-22
Air conditioner. 4-30, 9-3, 9-8
Air conditioner specification label 9-8
Air conditioning system refrigerant and lubricant recommendations 9-3
Alarm, How to stop alarm (refer to, vehicle security system). 2-47
Alcohol, drugs and driving 5-9
Antenna 4-66
Anti-lock Braking System (ABS) 5-136
Anti-lock braking system (ABS) warning light 2-17
Anti-lock Braking System (ABS) warning light 2-17
Antifreeze 5-141
Appearance care. 7-2, 7-4
At home after driving EV-18
Audible reminders 2-25
Audio System (models without Navigation System). 4-45
Autolight switch 2-52
Autolight system 2-52
Automatic 3-6
Automatic climate control (models with Navigation System) 4-37
Automatic climate control (models without Navigation System) 4-33
Automatic door locks 3-6
Automatic Emergency Braking (AEB) . . .5-110
Automatic Emergency Braking (AEB) with Pedestrian Detection 5-117
Avoiding collision and rollover 5-7

B

Battery EV-2, 2-8, 2-56, 8-12, 8-21
Battery saver system. 2-56
Before driving your vehicle (models with navigation system) EV-12
Before starting system 5-14
Blind Spot Warning (BSW) 5-37
Bluetooth® hands-free phone system without navigation system 4-67
Bluetooth® streaming audio 4-64
Booster seats 1-40
Brake. . .2-18, 2-19, 5-20, 5-134, 5-136, 8-11, 8-16
Brake fluid 8-11
Brake precautions 5-134
Brake system 5-134
BRAKE system warning light (yellow). . . .2-18
BRAKE warning light (red) 2-19
Brakes 8-16
Bulb replacement. 8-24

C

Car phone or CB radio 4-67
Care of wheels 7-3
Ceiling light 2-71
Changing coolant 8-10
Charge 2-61
Charge port lid 3-19
Charge port lid switch 2-61
Charge timer OFF switch 2-61
Charging. . . .CH-2, CH-8, CH-9, CH-15, CH-22, CH-29, CH-42, 3-19, 9-4
Charging methods CH-35
Charging related indicator light CH-42
Charging related remote function CH-41
Charging status indicator light CH-42
Charging the Li-ion battery EV-10

Charging troubleshooting guide CH-47
Chassis control 5-139
Checking 2-16, 8-9
Checking bulbs 2-16
Checking coolant level 8-9
Child restraints 1-22, 1-26, 1-40
Child safety. 1-19
Child safety rear door lock 3-6
Child seat belts 1-19
Circuit breaker, Fusible link 8-19
Cleaning 7-3
Cleaning aluminum alloy wheels 7-3
Cleaning exterior and interior. 7-2, 7-4
Climate control. 4-44
Climate control operation 4-30
Climate control service 4-44
Climate control system 4-30
Climate control system refrigerant and lubricant recommendations. 4-44
Climate Ctrl. Timer 4-40
Clock 2-12
Clock setting (models without Navigation System) 4-55
Cold weather driving 5-141
Console box. 2-64
coolant 8-8
Coolant 8-9, 8-10, 9-2
Cooling system 8-8
Corrosion protection 7-7
Cruise control. 5-54
Cup holders 2-65

D

Defroster switch, Rear window and outside mirror defroster switch 2-51
Dimensions and weights. 9-5
Display, vehicle information. 2-27
Door locks 3-4, 3-6
Doors 3-4
Driving 5-4, 5-15, 5-141
Driving range 2-10
Driving the vehicle EV-15
Driving vehicle. 5-15
e-Pedal 2-13
e-Pedal system. 5-22

E

ECO. 2-58
ECO drive report 5-131
ECO mode 2-12
ECO switch 2-58
Efficient use of your vehicle EV-19
Electric shift control system 5-15
Electronic parking brake 5-20
Emergency charge. CH-9, CH-15, CH-22
Emergency EV (Electric Vehicle) shut off 5-12, 6-3
Emergency shutoff system EV-8
Emission control information label 9-7
EV Characteristics EV-9
EV system EV-2
EV unique information EV-21
Event Data Recorder (EDR) 9-19
EVSE (Electric Vehicle Supply Equipment) CH-9, CH-15, CH-22
Exterior appearance care 7-2

F

F.M.V.S.S./C.M.V.S.S. certification label 9-7
Flashers (Refer to hazard warning flasher switch). 6-2
Flat tire 6-3
Flat towing. 9-13
Floor mat cleaning 7-5
Fluid. 8-8, 8-10, 8-11, 9-2
FM/AM/SAT Radio with Compact Disc (CD) Player. 4-54
Fog light switch 2-58
For Intelligent Key system 3-6
Front passenger air bag and status light 1-52
Front-seat mounted side-impact supplemental air bag system 1-58
Fuses 8-17
Fusible links 8-19

G

Garage door open, HomeLink®
Universal 2-72
Gauge 2-7, 2-8, 2-9, 2-10
General maintenance 8-2, 8-3
Glove box 2-64

H

Hazard warning flasher switch 6-2
Headlight switch 2-52
Headlights 2-52, 8-24
Headlights bulb replacement 8-24
Heated seat switch 2-59
Heated seats 2-59
Heated steering wheel 2-60
Heated steering wheel switch 2-60
Heater 4-30
High voltage precautions. EV-7
Hill Start. 5-140
Hill Start Assist. 5-140
Home charge CH-8
HomeLink® universal transceiver 2-72
Hood release 3-16
Horn 2-58
How to normal charge CH-8
How to quick charge CH-29
How to trickle charge
(if so equipped) CH-9, CH-15, CH-22

I

Identification number (VIN) 9-6
If the Li-ion battery becomes completely
discharged. 6-13
Immediate charge. CH-40
Immobilizer system 2-47, 5-13
Indicator lights 2-23
Indicators for maintenance 2-40
Indicators for operation. 2-36
Infants 1-20
Injured persons 1-14
Inside rearview mirror 3-23
Inside vehicle 8-3
Instrument brightness control. 2-57
Intelligent Around View Monitor 4-13
Intelligent Cruise Control (ICC) (for vehicles
without ProPILOT™ Assist) 5-56
Intelligent Driver Alertness (I-DA) 5-126
Intelligent Key battery 8-21
Intelligent Key system 3-13
Intelligent Lane Intervention (I-LI) 5-31
Interior appearance care 7-4
Interior light replacement 8-26
Interior lights 2-70
iPod® player operation 4-61
ISOFIX child restraint 1-24

J

Jump starting 6-10

K

Key operating range of the door lock/unlock
function 3-8
Key operation 3-9
Keyless entry 3-13
Keys 3-2, 3-6

L

Labels 1-61, 8-30, 9-6, 9-7, 9-8
Lane Departure Warning (LDW) 5-26
Larger children 1-20
LATCH system. 1-24
Li-ion battery EV-2
Li-ion battery available charge gauge . . .2-10
Li-ion battery status check. CH-41
Li-ion battery temperature gauge 2-8
Li-ion battery warmer. EV-5
License plate, Installing front license
plate 9-8
Light .1-61, 2-16, 2-23, 2-52, 2-58, 2-70, 2-71, 8-24
Lights, Exterior and interior light
replacement 8-26
Loading information 9-9

Loading information (Refer to vehicle loading information) 9-9
Lock 3-4, 3-6, 3-17
Low tire pressure warning light 2-20
Low tire pressure warning system 5-4
Low tire pressure warning system (Refer to Tire Pressure Monitoring System (TPMS)) . .5-4

M

Maintenance. 1-19, 2-40, 8-2, 8-3, 8-5, 8-12
Maintenance precautions 8-5
Maintenance requirements 8-2
Map lights 2-71
Mechanical key (Intelligent Key system) . . .3-3
Mirror. 3-23, 3-24
Motor 5-14, 9-5
Motor compartment 8-8
Motor serial number 9-7
Moving Object Detection 4-25

N

NISSAN Intelligent Key® system 3-6, 3-8, 3-9, 5-10
NISSAN Vehicle Immobilizer System .2-47, 5-13
NissanConnect® Manual (for Leaf) 4-3
Normal charge. CH-8

O

Occasional charge CH-8
Odometer 2-7
Off-road recovery 5-8
Oil. 9-2
Opening rear hatch. 3-11
Outside air temperature 2-11
Outside mirrors. 3-24
Outside vehicle. 8-3
Owner's Manual/Service Manual order information 9-20

P

Panic alarm 3-14
Parking 5-19, 5-20, 5-132
Parking brake 5-19
Parking brake break-in 5-135
Parking on hills. 5-132
Power 2-68, 3-4, 5-133
Power door lock 3-4
Power door lock switch. 3-5
Power economy. 5-130
Power meter 2-9
Power Meter 2-9
Power outlet 2-62
Power steering system. 5-133
Power switch 5-10, 5-11
Power windows 2-68
Precautions . . .EV-7, EV-8, CH-2, 1-11, 1-22, 1-43, 5-4, 5-54, 5-134, 8-5
Precautions on charging. CH-2
Precautions on child restraints. 1-22
Precautions on seat belt usage. 1-11
Precautions on supplemental restraint system 1-43
Precautions when starting and driving . . .5-4
Pregnant women 1-14
ProPILOT™ Assist 5-79
Public charge CH-8
Pulling up the wiper arm 8-14
Push starting 6-14

Q

Quick charge CH-29

R

Rapid air pressure loss 5-8
Rear center seat belt 1-17
Rear Cross Traffic Alert (RCTA) 5-46
Rear door lock, Child safety rear door lock .3-6
Rear hatch 3-17
Rear hatch lock 3-17
Rear seats 1-6
Rear window and outside mirror defroster switch. 2-51
Rear window wiper and washer switch . .2-50

Rear window wiper and washer switch . .2-50
Rear window wiper blade 8-16
RearView Monitor 4-4
Recommended fluids/lubricants and capacities 9-2
Reduction gear fluid 8-10
Remote charge CH-41
Remote climate control 4-43
Remote keyless entry function, For Intelligent Key system 3-13
Remote keyless operation 3-13
Repairing flat tire 6-4
Repairing tire 6-6
Replacement 8-24
Reporting safety defects 9-14
Road accident precautions EV-8
Roadside assistance program 6-2
Rollover 5-7
Roof-mounted curtain side-impact supplemental air bag system 1-58

S

Safety 1-19, 9-14
Scene guide . .EV-10, EV-12, EV-14, EV-15, EV-18
Seat belt cleaning 7-7
Seat belt extenders 1-18
Seat belt hook 1-18
Seat belt maintenance 1-19
Seat belt usage 1-11
Seat belt warning light 2-22
Seat belt(s) 1-11, 1-14, 1-17, 1-18, 1-19, 1-20, 1-59, 2-22, 7-7
Seat belts 1-11
Seat belts with pretensioners 1-59
Seat(s), Seats 1-2, 2-59
Security system 2-46
Security system (NISSAN Vehicle Immobilizer System), EV system start 2-47, 5-13
Servicing climate control 4-44
Shifting 5-15
Shoulder belt height adjustment 1-17
Shoulder belt height adjustment, For front seats 1-17
Small children 1-20
Specifications 9-4
Speedometer 2-7
Starting 5-4, 5-14, 6-10, 6-14
Starting your vehicle EV-14
Status light, Front passenger air bag 1-52
Steering 2-60, 3-21, 5-133
Steering wheel switch for audio control . .4-65
Stopping the vehicle 6-5
Storage 2-63
Stowing golf bags 2-68
Sun visors 3-22
Supplemental air bag warning labels 1-61
Supplemental air bag warning light . .1-61, 2-22
Supplemental restraint system 1-43
Switch 2-51, 2-52, 2-57, 2-58, 2-61, 3-5, 6-2

T

Telematic Control Unit Gen2K 9-17
Telematics overview 9-15
Temperature 2-8
Tether strap child restraints 1-26
Theft (NISSAN Vehicle Immobilizer System), traction motor start 2-47, 5-13
Three-point type 1-14
Tilt steering column 3-21
Tilting steering column 3-21
Tire 2-20
Tire and Loading information label 9-8
Tire and Loading Information label 8-30
Tire chains 8-35
Tire dressing 7-4
Tire pressure 8-31
Tire pressure monitoring system (TPMS) . .6-3
Tire Pressure Monitoring System (TPMS) . .5-4
Tire rotation 8-36
Tires . . .5-4, 6-3, 7-4, 8-28, 8-30, 8-31, 8-34, 8-35, 8-36, 9-5, 9-8, 9-13
tonneau cover 2-66
Top 1-26
Top tether strap 1-26
Tow truck towing 6-14
Towing 6-14, 9-13
Towing a trailer 9-13
TPMS, Tire Pressure Monitoring System . . .5-4
TPMS, Tire pressure warning system 6-3
Traction motor 9-7

Traction motor serial number 9-7
Trailer towing 9-13
Transceiver 2-72
Transceiver, HomeLink® Universal 2-72
Transmitter, With Intelligent Key system (Refer to Intelligent Key system) 3-13
Trickle charge CH-9, CH-15, CH-22
Turn signal switch 2-57
Type of charge and how to charge the Li-ion battery CH-5
Types of tires 8-34

U

Underbody cleaning. 7-3
Uniform tire quality grading. 9-13
Unplugged status CH-41
USB (Universal Serial Bus) connection port. 4-60

V

Vanity mirror 3-23
Vehicle. 2-46, 5-137, 9-5, 9-6, 9-9
Vehicle dynamic control (VDC) system . .5-137
Vehicle identification number (VIN). 9-6
Vehicle information display. 2-27
Vehicle security system. 2-46
Vents 4-29

W

Warning. 2-14, 2-16, 2-36, 5-4, 6-2, 6-3
Warning and indicator lights 0-11
Warning labels, Air bag warning labels . . .1-61
Warning light . . .1-61, 2-17, 2-18, 2-19, 2-20, 2-22
Warning lights 2-16
Warning lights, indicator lights and audible reminders 2-14
Washer switch 2-49, 2-50
Washing 7-2
Waxing 7-2
Weights (Refer to Dimensions and weights) 9-5
Wheel/tire size 9-5
Wheels and tires. 7-3, 8-28
When starting and driving 5-4
When traveling or registering your vehicle in another country 9-6
Window(s). 2-68, 7-3
Windshield wiper and washer switch. . . .2-49
Windshield-washer fluid 8-11
Wiper 2-49, 2-50, 8-14, 8-15, 8-16
Wiper blades 8-14, 8-15
With Intelligent Key system (Refer to Intelligent Key system) 3-13

Printing : November 2017
Publication No.: OM18EA 0ZE1U0
Printed in U.S.A.

'18 ZE1-D