Safety Precaution

Precautions to take before servicing high voltage system

DANGER

- Since hybrid vehicles contain a high voltage battery, if the high voltage system or vehicles are handled incorrectly, this might lead to a serious accidents like electric shock and electric leakage.

WARNING

- Be sure to shut off the high voltage by removing the safety plug before performing inspection or repairing the high voltage system.
  (Refer to "High Voltage Shut-off Procedures")
- The responsible worker keeps the removed safety plug to prevent the plug from being connected by mistake.
- Do not keep any metal objects (watch, ring etc.) while working on the high voltage system, which it can cause serious accidents like electric shock.
- Before beginning work on the high voltage system, the worker should wear personal protective equipment to prevent safety accidents.
  (Refer to "Personal Protective Equipment")
- Never allow workers who are not wear personal protective equipment to touch the high voltage system. High voltage components should be covered with an insulation sheet to prevent safety accidents.
- Use insulation tools when working on the high voltage system.
- Put the removed high voltage components on the insulation mat.

Information

- All the high voltage wiring and connectors are orange.
- A caution label for high voltage is attached to the high voltage components.
- High voltage components :
  High Voltage Battery Pack Assembly, Power Relay Assembly (PRA), BMS ECU, Hybrid Power Control Unit (HPCU), Hybrid Drive Motor, HSG, Electric A/C Compressor, Low DC/DC Converter (LDC), Power Cable, Electric Compressor etc.

CAUTION

- Inform of danger of high voltage by putting the "high voltage caution" on the vehicle as image below.

SAMPLE

DANGER

High Voltage : Do not touch during operation.

Person in charge : _____

Copy this page and put it after folding on the roof of the vehicle in service.

DANGER

High Voltage : Do not touch during operation.

Person in charge : _____

Personal Protective Equipment

Name	Illustration	Description
Insulation glove		Used when inspecting or working on the high voltage components [Insulation performance : 1000V / 300A or above]
Insulation shoes		Used when inspecting or working on the high voltage components

Insulation clothes		Used in the case below • During Removal & installation or inspection of the high voltage battery terminals or wiring, which spark might happen. • During working on the high voltage battery pack assembly.
Insulation helmet	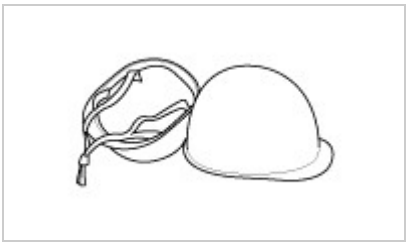	
Safety glasses		
Face shield		
Insulation mat	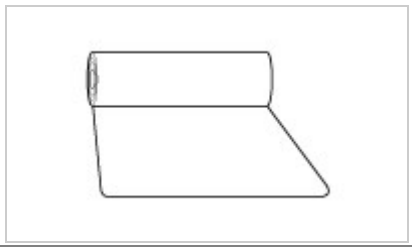	Putting the removed high voltage components on the insulation mat to prevent safety accidents.
Insulation sheet	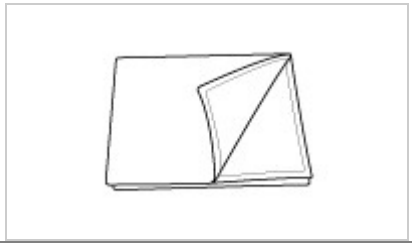	Covering the high voltage components with insulation sheet to prevent people who don’t wear the personal protective equipment from safety accidents.

Precautions to take when handling power cable

- Immediately insulate the high voltage terminal after reconnecting the terminal (use insulation tape).
- Tighten the high voltage terminal screw to spec torque.
- Be careful that (+) and (-) terminals do not come in contact when connecting or disconnecting power cable and busbar.

Precautions to take when handling high voltage battery

- When transporting high voltage battery, be sure to keep it flat and leveled. Failure to do so may decrease the battery performance and/or its life-span.
- High voltage battery"s performance may decrease if it is exposed to high temperature for a lengthy period. As a result, heat-treatment after painting must not exceed 70°C/ 30 minutes, or 80°C/ 20 minutes.

Precautions in case of fire on high voltage battery system

- If the fire occurs indoor, ventilate the area to let out hydrogen gas.
- ACB fire extinguisher is recommended for putting out the fire. (water may also be used).

Precautions in case of high voltage battery gas or electrolyte leakage

-

Turn OFF the Start button. Keep the Smart Key at least 2 meters away from the vehicle to prevent unintended engine start.

- Gas is hydrogen and alkaline vapor. If the leakage is indoor, ventilate the area immediately and evacuate to a safe location.
- If the leaked liquid comes in contact with skin, immediately neutralize the affected area with boric acid solution, then clean with tap water or saline solution.
- If the leaked vapor or liquid gets in the eye, immediately clean the affected eye with water then get medical attention.
- If the gas leakage is caused by high temperature, then do NOT use the battery until the high voltage battery fully cools down to room temperature.

Precautions when handling the vehicle after an accident

- Be sure to wear insulated gloves (or rubber gloves), protective goggles, insulated suite, and insulated boots.
- Do NOT touch bare cable under any condition.
  (Refer to "Precautions when handling power cable")
- In case of vehicle fire, put out the fire with ABC extinguisher. Do NOT use water (usage of large volume of water is okay, but small volume can worsen the situation).
- If more than half of the vehicle is submerged, then do NOT go near the Safety Switch or other high voltage related components. If such a component must be accessed, then move the vehicle to the safe location first before handling the component.
- Gas is hydrogen and alkaline vapor. If the leakage is indoor, ventilate the area immediately and evacuate to a safe location.
- If the leaked liquid comes in contact with skin, immediately neutralize the affected area with boric acid solution, then clean with tap water or saline solution.
- Refer to "High voltage cut-off procedure" if the high voltage needs to be cut off.

Preparations when servicing the accident vehicle

- Be sure to wear insulated gloves (or rubber gloves), protective goggles, insulated suite, and insulated boots.
- Boric Acid Power or Solution
- ABC Extinguisher
- Towel for cleaning electrolyte
- Vinyl tape (for insulating terminal)
- Mega ohm tester (for checking high voltage)

Precautions in case HEV is left unattended for a lengthy period

- Turn OFF the Start button. Keep the Smart Key at least 2 meters away from the vehicle to prevent unintended engine start.
- We recommend that HEV is driven at least 1 time for over 30 minutes every 2 months to protect and manage the high voltage battery (inquire at relevant team in HMC).
- When inspecting or exchanging the auxiliary battery, check high voltage battery SOC reset related problems.

Hybrid Vehicle Refrigerant Recovery / Charging Precautions

- Since the electric compressor uses high-voltage, you should use POE oil which have high Volumetric Resistivity.
- Do not use the same A/C recovery / charging station as conventional belt-driven compressors.

WARNING

- If the POE oil of the system gets mixed with PAG oil, then dielectric breakdown due to decreased volumetric Resistivity can occur and inoperative A/C compressor may result, A/C compressor may not work

High Voltage Shut-off Procedures

WARNING

- Be sure to read and follow the "General Safety Information and Caution" before doing any work related with the high voltage system. Failure to follow the safety instructions may result in serious electrical injuries.
- Be sure to read and follow the "High Voltage Shut-off Procedures" before doing any work related with the high voltage system. Failure to follow the safety instructions may result in serious electrical injuries.

Information

- High voltage components :
  High Voltage Battery Pack Assembly, Power Relay Assembly (PRA), BMS ECU, Hybrid Power Control Unit (HPCU), Hybrid Drive Motor, HSG, Electric A/C Compressor, Low DC/DC Converter (LDC), Power Cable, Electric Compressor etc.

1. Turn the ignition switch OFF and disconnect the auxiliary 12V battery negative (-) terminal.

2. Remove the safety plug cover (A).

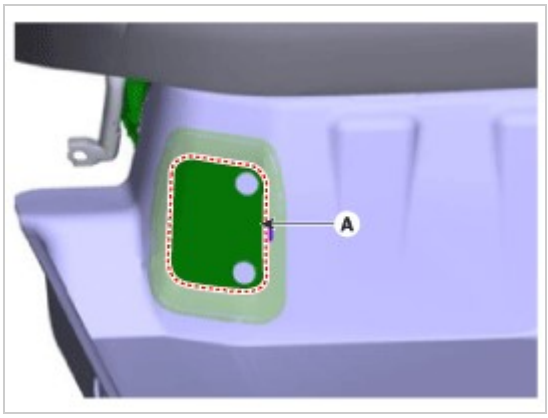

3. Unfasten the hook (A) and then remove the safety plug (C) by pulling the lever (B) to the direction of arrow.

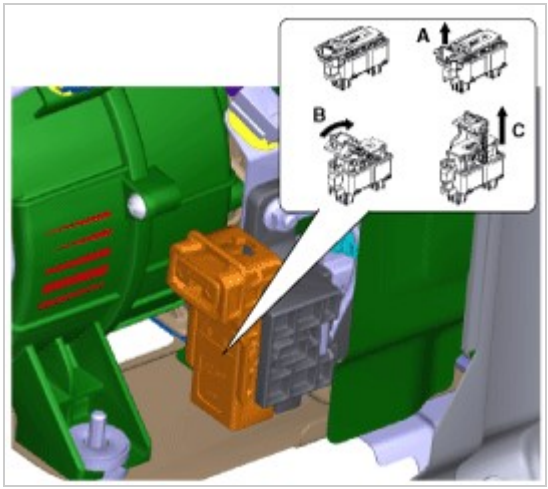

4. Wait for more than 5 minutes so that the capacitor in the high voltage system can be fully discharged.
5. Measure the voltage between the inverter terminals to check that the capacitor in the inverter is discharged completely.
   (1) Remove air cleaner assembly and air duct.
   (Refer to Engine Mechanical System - "Air Cleaner")
   (2) Disconnect the inverter power cable (A).

Information

- Disconnect the inverter power cable as the procedures below.

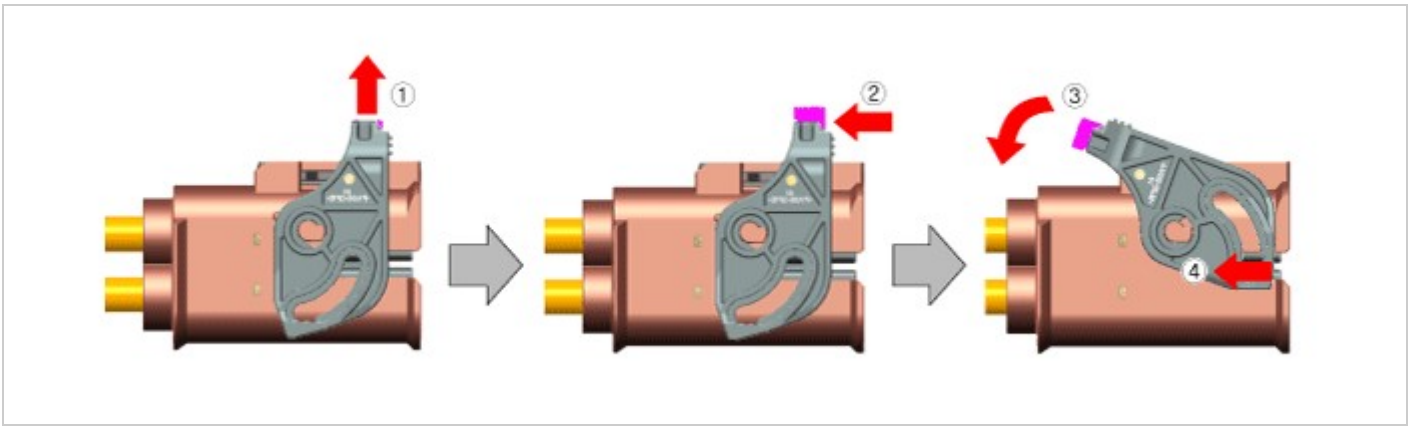

(3) Measure the voltage between the inverter (+) terminal and the inverter (-) terminal.

Less than 30V : High voltage circuit properly shut
More than 30V : Fault on high voltage circuit

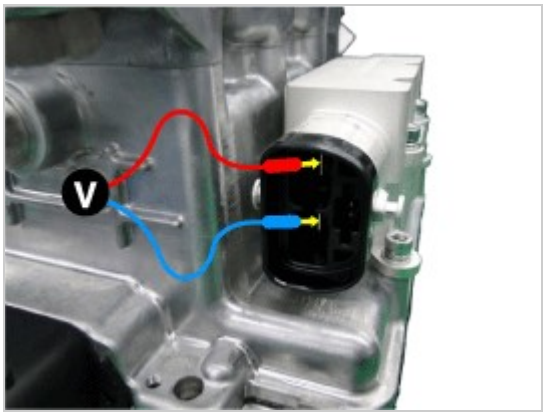

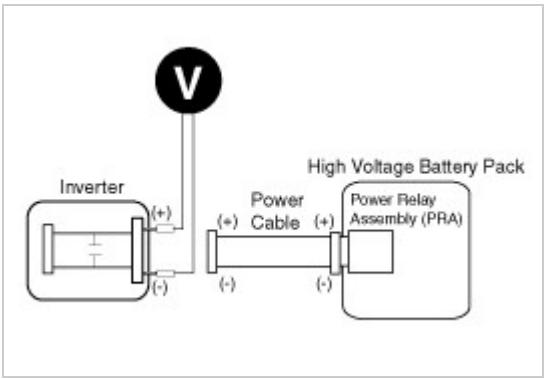

WARNING

- If measured more than 30V, check if the safety plug is removed completely.If measured more than 30V despite the safety plug is removed, there can be serious problems on the high voltage circuit. In this case, check DTC and never touch the high voltage system circuits.

DCT (Dual Clutch Transmission) System

Specifications

Transmission type		D6KF1
Engine Type		Kappa 1.6 GDI
Transmssion fluid	Quantity	1.6 - 1.7 L
	Specified lubricant	API Service GL-4, SAE 70W • Recommended oil – SHELL: SPIRAX S6 GHME 70W DCTF – SK: HK DCTF 70W – GS CALTEX: GS DCTF HD 70W
Gear ratio	1st	3.867
	2nd	2.217
	3rd	1.371
	4th	0.930
	5th	0.956
	6th	0.767
	Reverse	5.351
Final gear ratio	1st, 2nd, 3rd, 4th	4.188
	5th, 6th, R	3.045

Clutch Actuator

Item	Condition	Specifications
Resistance (line to line)	Motor 1	57 mΩ ±10 %
	Motor 2	57 mΩ ± 10 %
Rated voltage		12V
Max. current		60 A
Operation condition (°C)°F		-40 to 257 °F (-40 to 125 °C)

Gear Actuator

Item		Specifications
Resistance (line to line)	Shift motor 1/2	126.4 mΩ ± 10 %
	Select solenoid 1/2	0.7 mΩ ± 10 %
Max. current	Shift motor 1/2	45 A
	Select solenoid 1/2	20 A
Select solenoid sensor output	PULL	4.0 ± 0.15 V
	PUSH	1.0 ± 0.15 V
Operation condition (°C)°F		-40 to 257 °F (-40 to 125 °C)
Rated voltage		13V
Sensor supply voltage		8.75 V

Inhibitor Switch

Item	Specification
Output type	Combination of output signals
Power supply	12V

Input Shaft Speed Sensor 1,2

Item	Specification
Type	Hall effect sensor
Operation condition (°C)°F	-86 to 257 °F (-30 to 125 °C)
Output signal (mA)	High: 11.8 - 16.8
	Low: 5.9 - 8.4

Tightening Torques

Item	N.m	kgf.m	lb-ft
Clutch actuator motor mounting bolts	3.9 - 5.9	0.4 - 0.6	2.9 - 4.3
Clutch actuator mounting bolt	19.6 - 26.5	2.0 - 2.7	14.5 - 19.5
Fork cover mounting bolt	3.9 - 5.9	0.4 - 0.6	2.9 - 4.3
Gear actuator mounting bolt	19.6 - 26.5	2.0 - 2.7	14.5 - 19.5
	9.8 - 11.8	1.0 - 1.2	7.2 - 8.7
Input shaft speed sensor mounting bolt	9.8 - 11.8	1.0 - 1.2	7.2 - 8.7
Inhibitor swtich mounting bolt	9.8 - 11.8	1.0 - 1.2	7.2 - 8.7
Manual Lever mounting nut	17.4 - 24.5	1.8 - 2.5	13.0 - 18.1
Oil drain plug	58.8 - 78.5	6.0 - 8.0	43.4 - 57.9
Oil filler plug	58.8 - 78.5	6.0 - 8.0	43.4 - 57.9
Shift cable bracket mounting bolt	19.6 - 26.5	2.0 - 2.7	14.5 - 19.5
Shift cable mounting nut	9.8 - 13.7	1.0 - 1.4	7.2 - 10.1
Shift lever assembly mounting bolt	8.8 - 13.7	0.9 - 1.4	9.4 - 10.8
Stater motor mounting bolt	49.0 - 63.7	5.0 - 6.5	36.2 - 47.0
Transmission support bracket mounting bolt	88.3 - 107.9	9.0 - 11.0	65.1 - 79.6
Transmission support bracket bolt	58.9 - 78.5	6.0 - 8.0	43.4 - 57.8
Transmission upper mounting bolt (Transmission → Hybrid motor)	58.9 - 78.5	6.0 - 8.0	43.4 - 57.8
Transmission lower mounting bolt (Hybrid motor → Transmission)			
Hybrid motor mounting bolts (Hybrid motor ↔ Engine)	39.2 - 48.1	4.0 - 4.9	28.9 - 35.4
	48.1 - 53.9	4.9 - 5.5	35.4 - 39.8
TCM bracket mounting nut	9.8 - 11.8	1.0 - 1.2	7.2 - 8.7
Clutch engagement bearing and sleeve mounting bolt	9.8 - 11.8	1.0 - 1.2	7.2 - 8.7

Lubricants

Item	Specified lubricant	Quantity
Input shaft 1/2 spline	Extreme pressure grease for vehicle	0.15 - 0.25 g
Clutch Engagement Fork	Extreme pressure grease for vehicle	0.1 - 0.2 g

Special Service Tools

Tool (Number and Name)	Illustration	Use
09200-3N000 Engine support fixture (Beam)	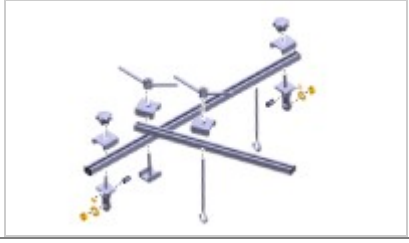	Removal and installation of the transaxle. Use this beam (SST No. : 09200-3N000) with the supporter (SST No. : 09200-2S000). ※Permit operating with 09200-38001. ※Refer to the engine support fixture assembly drawing below.
A : 09200-2S000 B : 09200-2S100 C : 09200-2S200 Engine support fixture (Supporter)	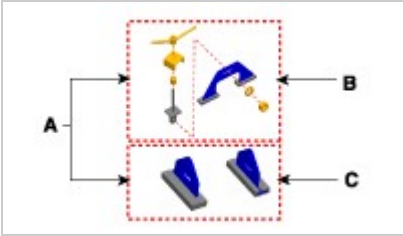	Removal and installation of the transaxle. Use this beam (SST No. : 09200-38001/3N000) with the supporter (SST No. : 09200-2S000). ※Refer to the engine support fixture assembly drawing below.
09430-C1190 Oil seal installer		Used for installing differential oil seal of both side Used with the handle (09231-H1100)
09231-H1100 Handle	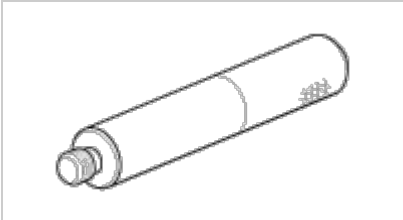	Used with the oil seal installer when installing oil seal
09480-A3800 Inhibitor switch neutral fixed pin		When installing the manual control lever on the inhibitor switch, used to align the neutral position.
09430-C1180 Dual clutch remover		Used for removing dual clutch assembly
09430-2A240 Dual clutch Installer		Used for installing dual clutch assembly
09430-G2100 Clutch actuator remover		Used for removing clutch actuator assembly
09430-F0100 Actuator fixing jig & Motor shaft reset tool		Used for adjusting clutch actuator Used with the Clutch actuator adjuster (09430-C1300)

	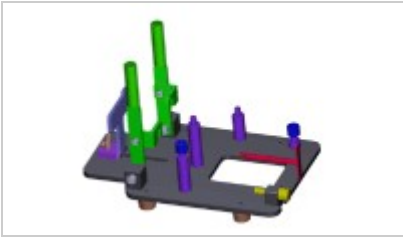	
09430-C1300 Clutch abrasion compensation tool		Used for adjusting clutch actuator Used with the Clutch actuator adjustment jig (09430-F0100)

※ Engine support fixture special tool assembly drawing

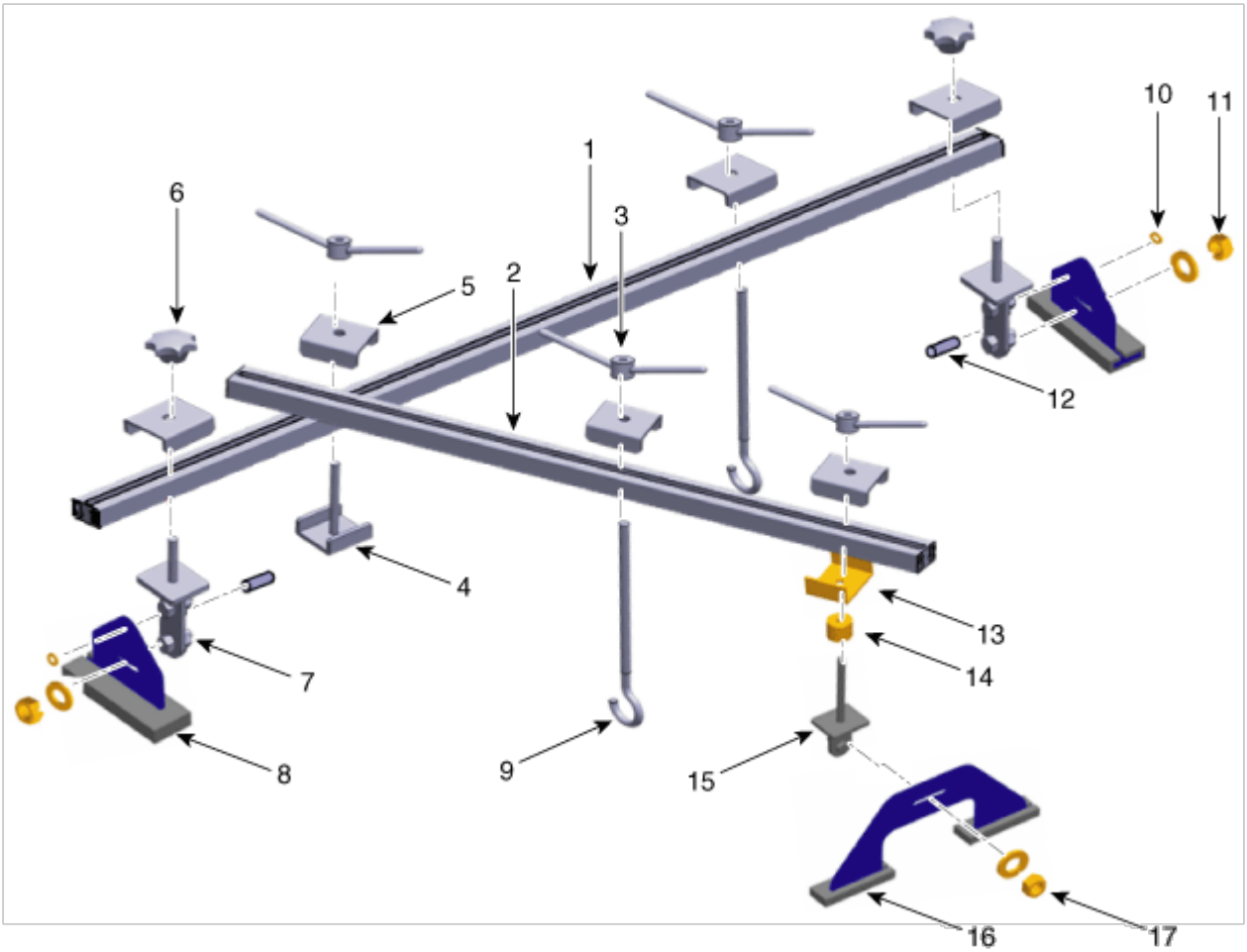

1. 09200-3N000(Main bar)
2. 09200-3N000(Sub bar)
3. 09200-3N000(Handle)
4. 09200-3N000(Stopper)
5. 09200-3N000(Stopper)
6. 09200-3N000(Knobe)
7. 09200-3N000(Adaptor)
8. 09200-2S000(Supporter)
9. 09200-3N000(Hanger)
10. 09200-3N000(Clip)
11. 09200-3N000(Nut)
12. 09200-3N000(Pin)
13. 09200-2S000(Stopper)
14. 09200-2S000(Spacer)
15. 09200-2S000(Adaptor)
16. 09200-2S000(Supporter)
17. 09200-2S000(Nut)

Troubleshooting

Trouble symptom	Probable cause	Remedy
Displayed the warning lamp "E" (Driving is only possible with 1/ R gear)	Not performed DCT learning	Perform the DCT manual learning procedure.
Impossible to driving with odd gear	Clutch actuator (Clutch motor 1 or position sensor 1 failure)	Replace the clutch actuator assembly.
	Gear actuator (Shift motor 1 or position sensor 1 failure, select solenoid 1 or position sensor 1 failure)	Replace the gear actuator assembly.
	Input speed sensor 1 failure	Replace the input speed sensor.
	Faulty gears (1, 3, 5)	Replace the gear.
	Faulty clutch 1	Replace the dual clutch assembly.
	Faulty engagement bearing 1	Replace the Engagement Bearing Assembly
Impossible to driving with even gear	Clutch actuator (Clutch motor 2 or position sensor 2 failure)	Replace the clutch actuator assembly.
	Gear actuator (Shift motor 2 or position sensor 2 failure, select solenoid 2 or position sensor 2 failure)	Replace the gear actuator assembly.
	Input speed sensor 2 failure	Replace the input speed sensor.
	Faulty gears (2, 4, 6, R)	Replace the gear.
	Faulty clutch 2	Replace the dual clutch assembly.
	Faulty engagement bearing 2	Replace the Engagement Bearing Assembly
Impossible to driving	TCM failure	Replace the TCM.
	Odd / even system simultaneous failure	Replace the dual clutch assembly or gear.
	Inhibitor switch / shift lever sensor simultaneous failure	Replace the inhibitor switch.
Impossible to manual mode	Inhibitor switch failure	Replace the inhibitor switch.
	Shift lever sensor failure	Replace the shift lever.
	Manual mod switch failure	Replace the manual mod switch housing.
noise	Oil level (Low)	Refill the oil with transmission after inspecting the parts (Oil seal, Drain plug, Filler plug).
	Oil (Wrong)	Replace the oil.
	Synchronizer ring (Worn or damaged)	Replace the synchronizer ring.
	Gear (Worn or damaged)	Replace the gear.
	Bearing (Worn or damaged)	Replace the bearing.
Oil leak	Oil level (High)	Inspect the oil level.
	Gasket (Damaged)	Replace the gasket.
	Oil seal (Worn or damaged)	Replace the oil seal.
Hard shifting or impossible to shift	Oil (Wrong)	Replace the oil.
	Shift fork (Worn)	Replace the shift fork.
	Synchronizer ring (Worn or damaged)	Replace the synchronizer ring.
	Gear (Worn or damaged)	Replace the gear.
	Hub sleeve (Worn or damaged)	Replace the hub sleeve.

Components (1)

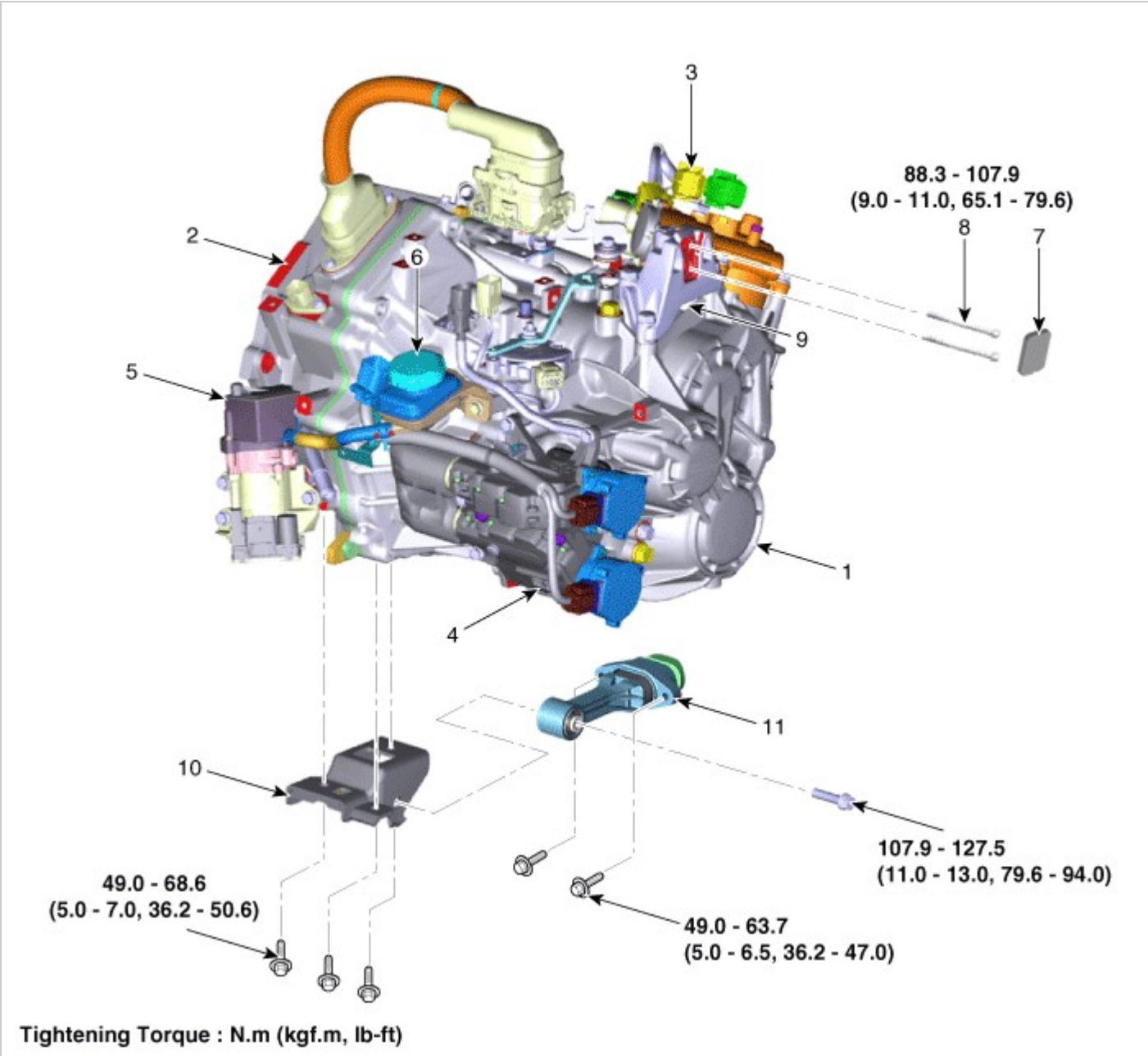

1. Dual clutch transmission assembly
2. Hybrid motor assembly
3. Gear actuator
4. Clutch actuator
5. Engine clutch actuator
6. Reserver
7. Dust cover
8. Support bracket mounting bolt
9. DCT (Dual Clutch Transmission) support bracket
10. Roll rod support bracket
11. Roll rod barcket

Components (2)

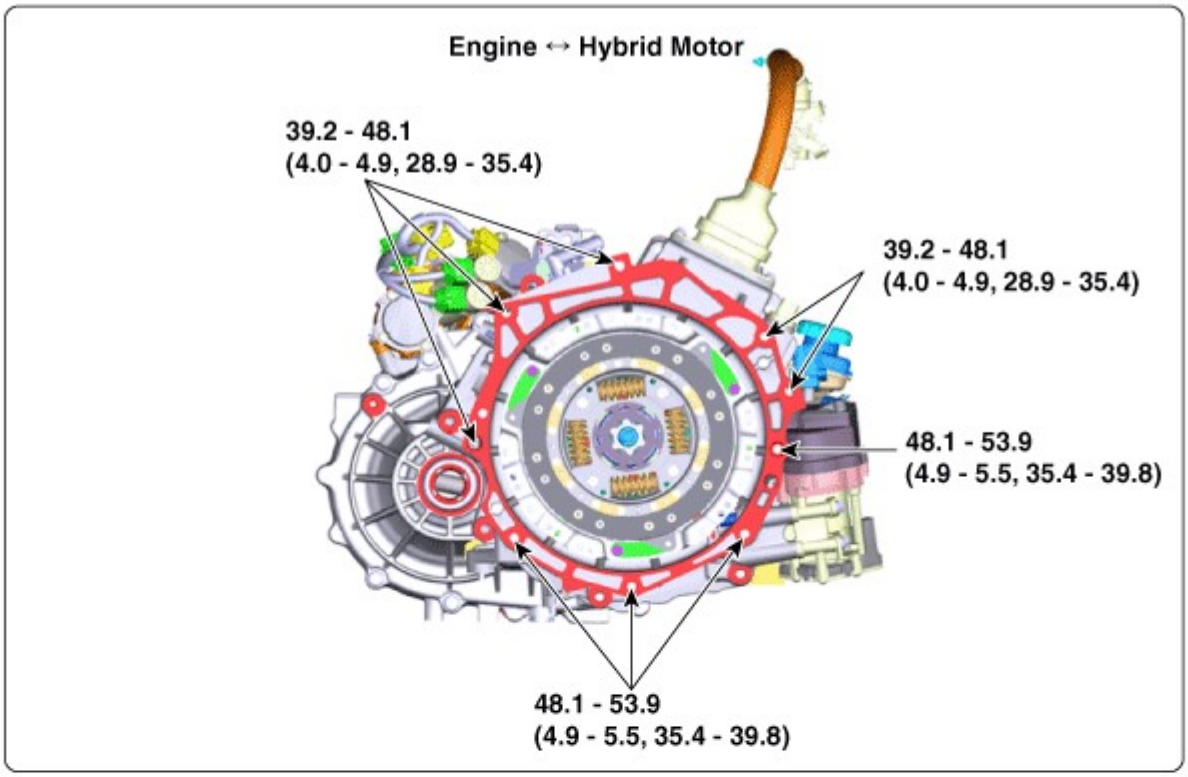

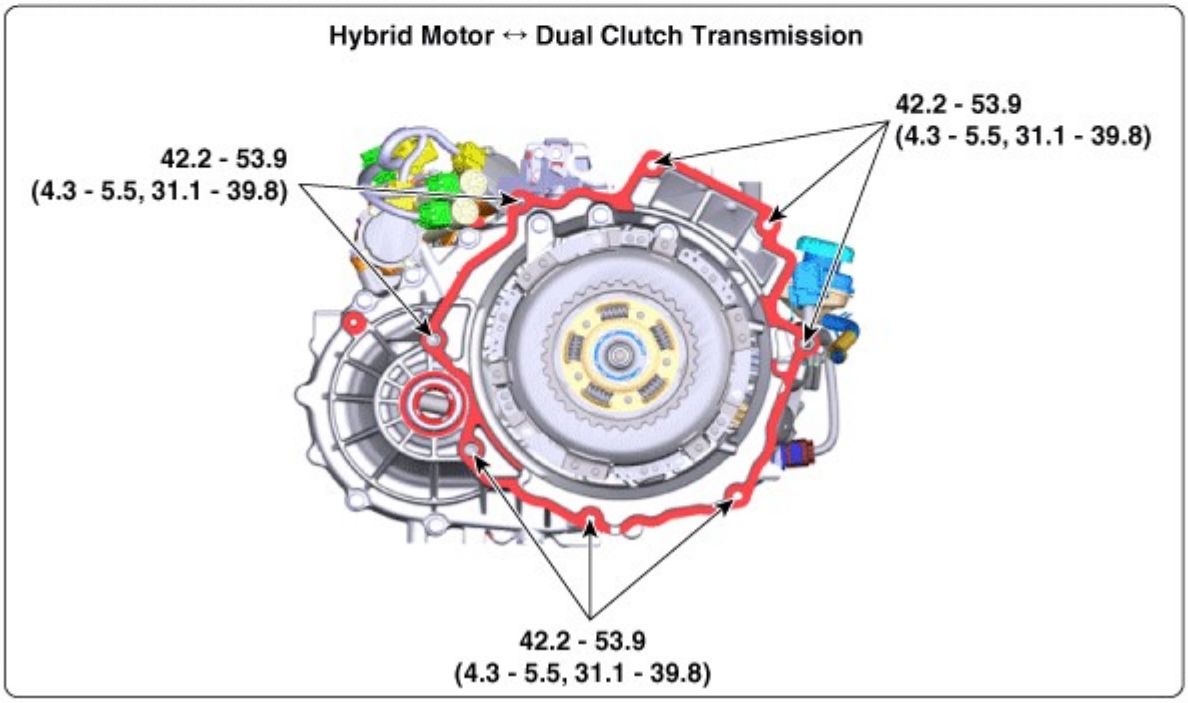

Tightening Torque : N.m (kgf.m, lb-ft)

Removal

WARNING

- Be sure to read and follow the "General Safety Information and Caution" before doing any work related with the high voltage system. Failure to follow the safety instructions may result in serious electrical injuries.

NOTICE

- Use fender covers to avoid damaging painted surfaces.
- To avoid damage, unplug the wiring connectors carefully while holding the connector portion.

1. Shut off the High Voltage circuit.
   (Refer to General Information - "High Voltage Shutoff Procedure")
2. Remove the engine room under cover.
   (Refer to Engine And Transaxle Assembly - "Engine Room Under Cover")

3. Loosen the drain plug, and drain the inverter coolant. Remove the reservoir cap to help drain the coolant faster.
   (Refer to Hybrid Motor System - "Coolant")
4. Remove the HPCU (Hybrid Power Control Unit).
   (Refer to Hybrid Control System - "Hybrid Power Control Unit (HPCU)")
5. Remove the ECM (Engine Control Module) and TCM (Transmssion Control Module).
   (Refer to Engine Control/Fuel System - "Engine Control Module (ECM)")
   (Refer to Dual Clutch Control System - "DCT Control Module (TCM)")
6. Remove the HPCU (Hybrid Power Control Unit) tray.
   (Refer to Hybrid Control System - "Hybrid Power Control Unit (HPCU)")
7. Disconnect the gear actuator motor connector (A) and solenoid connector (B).

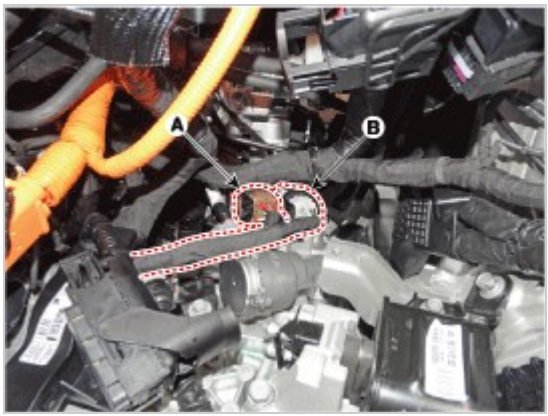

8. Disconnect the hybrid motor connector (A) and engine clutch actuator connector (B).
9. Disconnect the DCT clutch actuator connector (C).

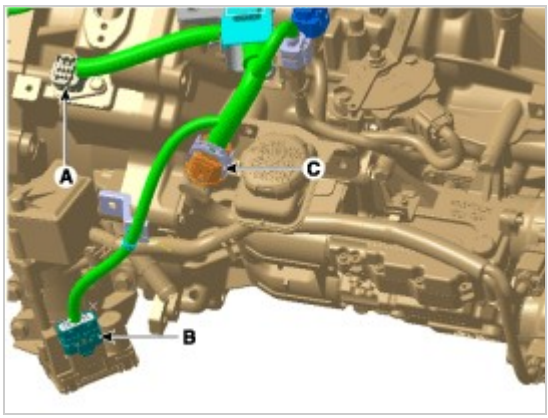

10. Disconnect the inhibitor switch connector (A) and input shaft speed sensor connector (B).
11. Remove the ground bolt (C) and wiring bracket bolt (D).

Tightening torque :
9.8 - 11.8 N.m (1.0 - 1.2kgf.m, 7.2 - 8.7 lb-ft)

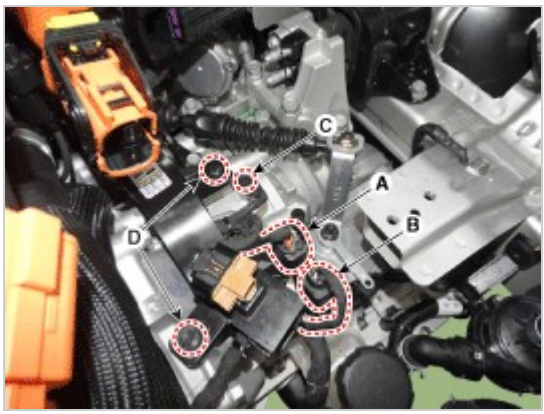

12. Remove the nut (A) and shift cable bracket bolt (B-2ea).

Tightening torque :
(A) 9.8 - 13.7 N.m (1.0 - 1.4 kgf.m, 7.2 - 10.8 lb-ft)
(B) 19.6 - 26.5 N.m (2.0 - 2.7 kgf.m, 14.5 - 19.5 lb-ft)

13. Remove the ground bolts (A).

14. Remove the hybrid motor cooling hose (A).

15. Remove the hybrid motor upper mounting bolt (A-3ea).

Tightening torque :
39.2 - 48.1 N.m (4.0 - 4.9kgf.m, 28.9 - 35.4 lb-ft)

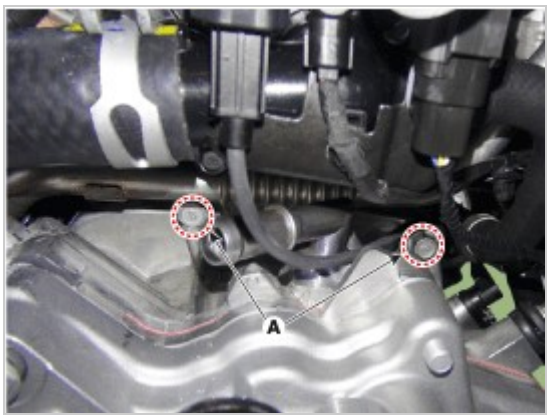

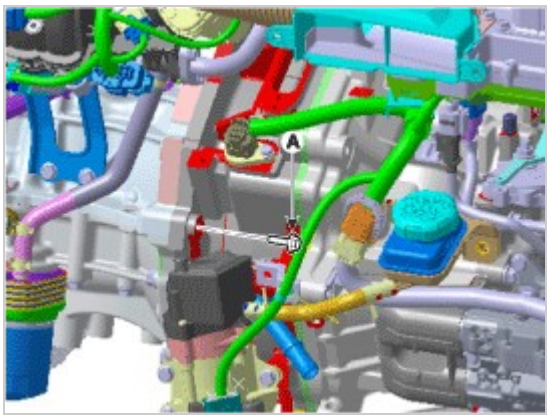

16. Assemble the engine support fixture (beam No.: 09200-38001 or 09200-3N000, supporter No.: 09200-2S000). (Refer to Special Service Tools - "Engine Support Fixture Assembly Drawing")
17. Using the engine support fixture(A), hold the engine and transaxle assembly safely.

18. Remove the dust cover (A).

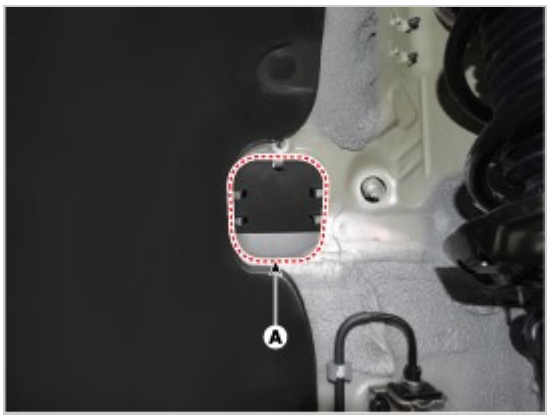

19. Remove the transmission support bracket mounting bolt (A-2ea).

Tightening torque :
88.3 - 107.9 N.m (9.0 - 11.0 kgf.m, 65.1 - 79.8 lb-ft)

20. Remove the transmission support bracket (A).

Tightening torque :
58.8 - 78.5 N.m (6.0 - 8.0 kgf.m, 43.4 - 57.9 lb-ft)

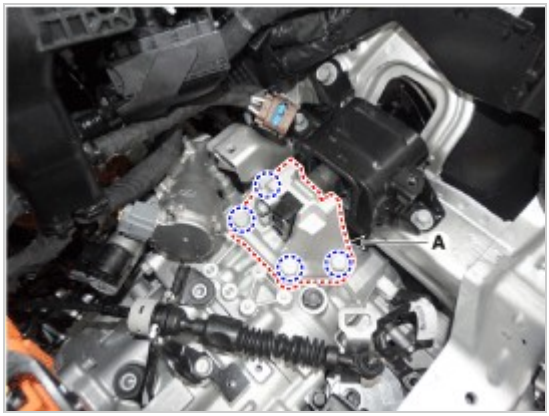

21. Remove the sub frame.
    (Refer to Suspension System - "Sub Frame")
22. Remove the front drive shaft assembly.
    (Refer to Driveshaft and Axle - "Front Driveshaft")
23. Remove the AWEP (Auxiliary Electronic water pump).
    (Refer to Heating, Ventilation and Air Conditioning - "AWEP (Auxiliary Electronic water pump)")
24. Remove the crankshaft position sensor.
    (Engine Control / Fuel System - "Crankshaft Position Sensor (CKPS)")
25. Remove the roll rod support bracket (A).

    Tightening torque :
    49.0 - 68.6 N.m (5.0 - 7.0 kgf.m, 36.2 - 50.6 lb-ft)

26. Support the hybrid motor and transmission safely by using the jack.
27. Remove the hybird motor lower mounting bolts (A, B).

    Tightening torque :
    (A) 39.2 - 48.1 N.m (4.0 - 4.9kgf.m, 28.9 - 35.4 lb-ft)
    (B) 48.1 - 53.9 N.m (4.9 - 5.5kgf.m, 35.4 - 39.8 lb-ft)

28. After separating the hybrid motor and transmission from the engine, remove the transmission by lowering the jack slowly.

> **⚠ CAUTION**
> • Be careful not to damage other system or parts near by when removing the hybrid motor and transmission assembly.

29. Remove the hybrid motor assembly from the dual clutch transmission.

Installation

1. Install in the reverse order of removal.

> **⚠ CAUTION**
> Matters that require attention when installing the dual clutch transmission (DCT) to hybrid motor.
> 1) Check the pilot bearing (A) and connector on the side of motor for any dents, damages and deformations before installing the DCT.
>
>
>
>
> 2) Align the connector on the side of motor (A) with the dual clutch spline (B).
>
> 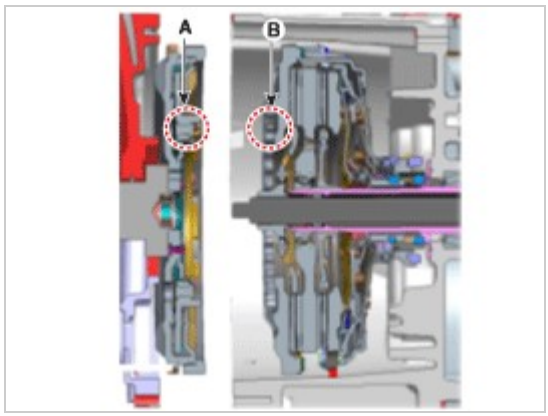
>
>
> 3) Insert the input shaft (A) to the engine pilot bearing (B) and then assemble the DCT to the knock bushing on the hybrid motor side.

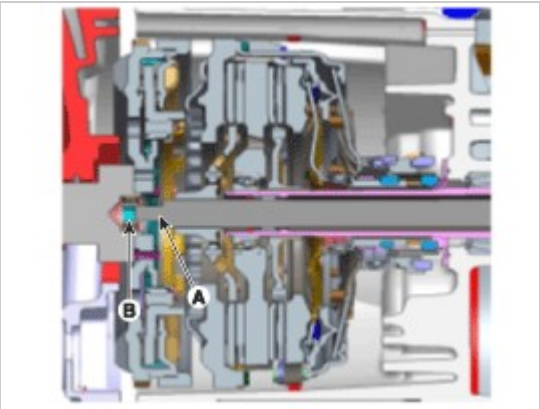

4) After adhering the DCT with hybrid motor by pushing the DCT, tighten the mounting bolts after checking that there is no gap (less than 2mm) between the clutch housing and the hybrid motor housing.
(If the bolt is tightened while there is a gap, then the spline of external damper or clutch will be damaged or broken.)

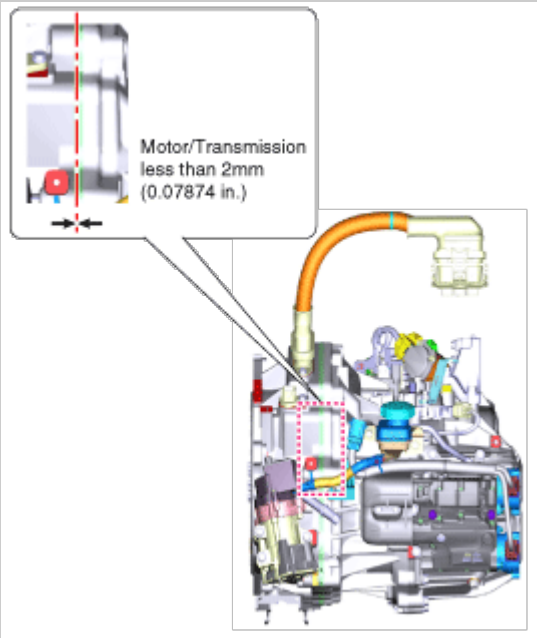

2. Observe each separate procedure below for reinstallation or replacement with a new dual clutch transmission.

When reinstalling

1. If the differential oil seal is damaged and oil is leaking, replace the oil seal with a new one. When installing a new oil seal, use the special tool (09430-C1190, 09231-H1100).
2. After installing the DCT, check the oil level after refilling the DCT with oil.
   (Refer to Dual Clutch Transmission System - "Transmission Gear oil")
3. Bleed air from the hybrid motor cooling system using GDS.
   (Refer to Hybrid Motor System- "Coolant")
4. Clear the diagnostic trouble codes (DTC) using the KDS/GDS. Disconnecting the battery negative terminal will not clear the DTCs. Clear the DTCs using the KDS/GDS at all times.

When replacing with a new dual clutch transmission

1. After replacing the new DCT, it need not oil refill & level check procedure because oil is already filled with specified quantity inside new DCT.
2. Clear the diagnostic trouble codes (DTC) using the KDS/GDS. Disconnecting the battery negative terminal will not clear the DTCs. Clear the DTCs using the KDS/GDS at all times.
3. Bleed air from the hybrid motor cooling system using the GDS.
   (Refer to Hybrid Motor System- "Coolant")
4. Perform initialization of the engine clutch inspection line learning and diagnostic information using the GDS.

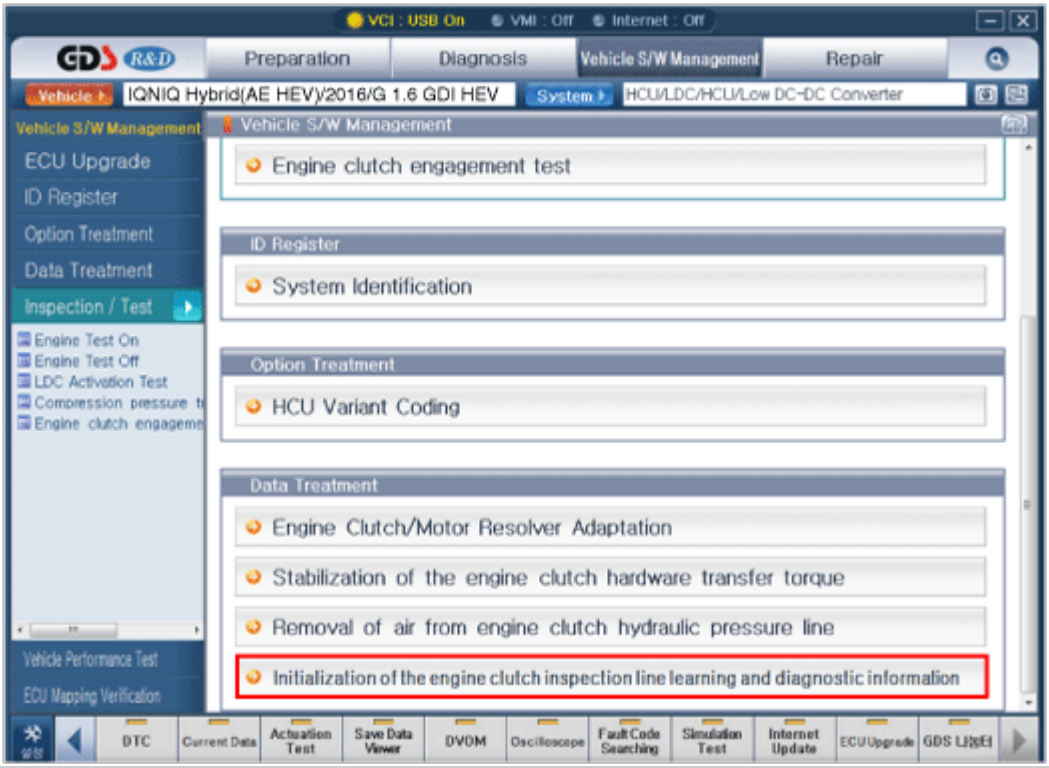

5. Perform of the removal of air from engine clutch hydraulic pressure line using the GDS.

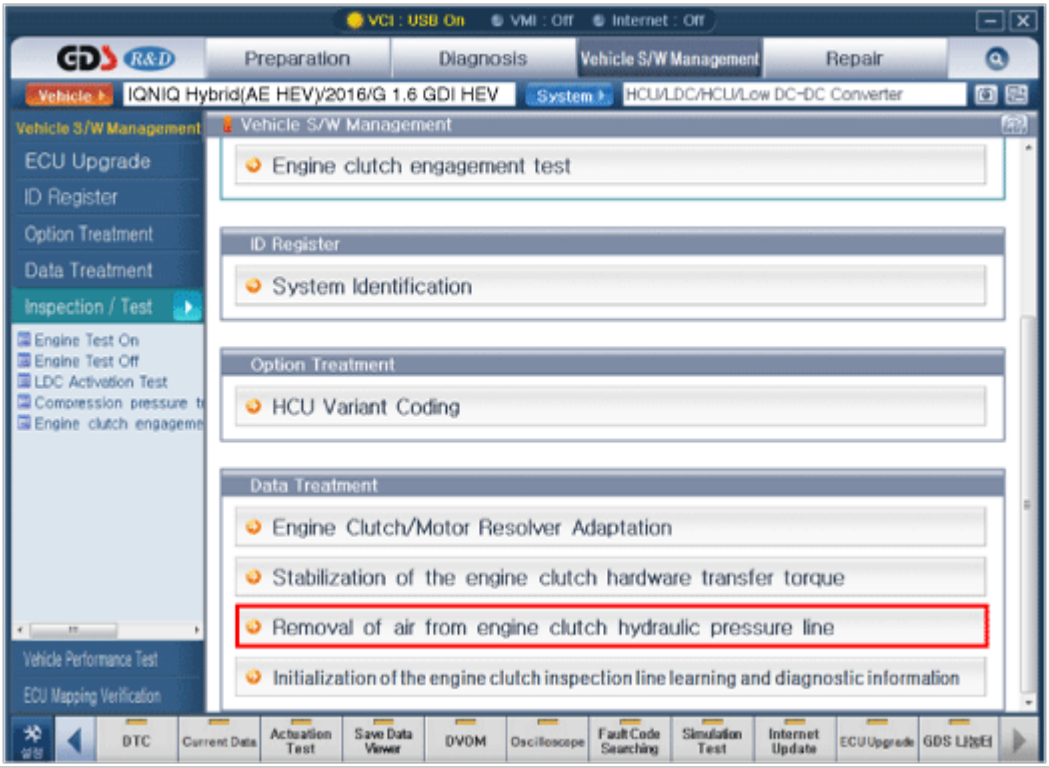

6. Perform of the engine clutch/motor resolver adaptation using the GDS.

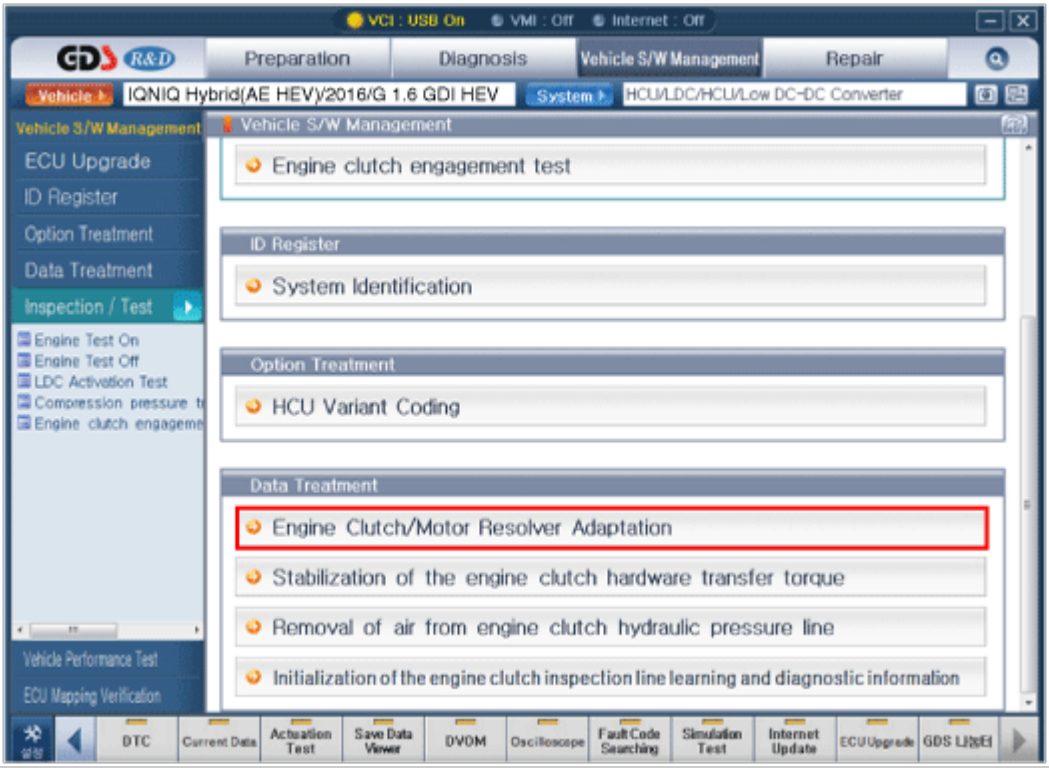

7. Perform of the stabilization of the engine clutch hardware transfer torque using the GDS.

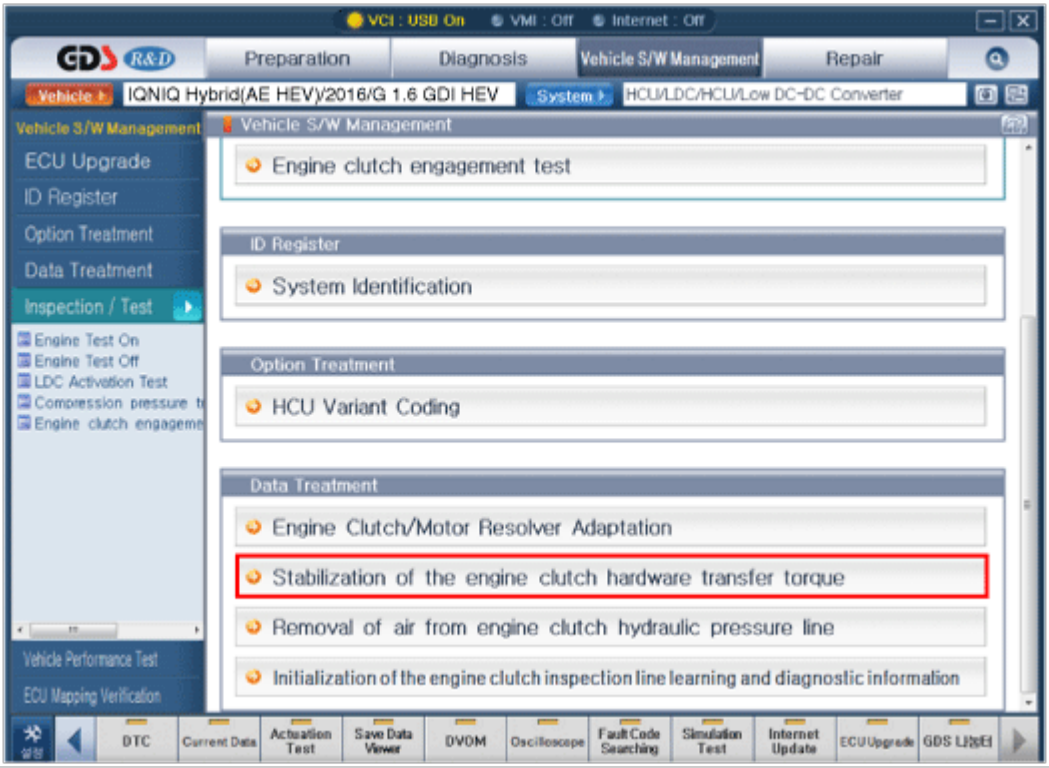

8. Perform clutch characteristics input procedure using the GDS. (One of two procedures must be performed.)
   - Clutch characteristics input (Manual Teaching)

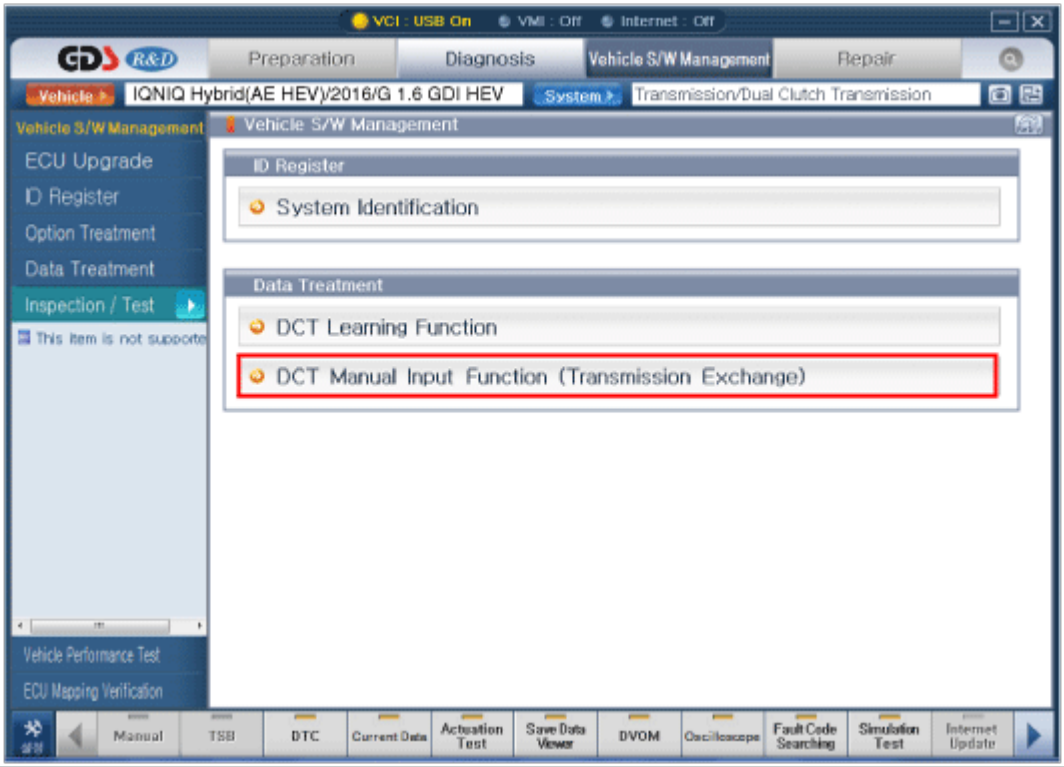

• Clutch touch point learning

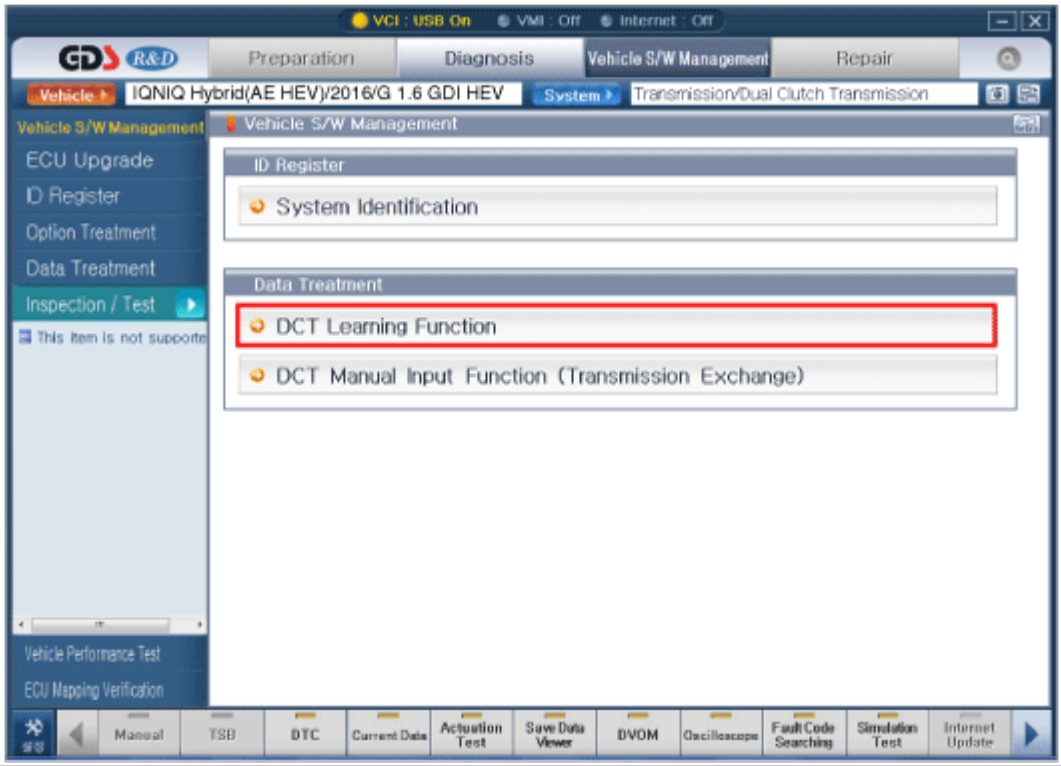

DCT (Dual Clutch Transmission) System

General Information

1. Check & Change intervals

Check & Replenishment	Change		Capacity	Oil specification
	Normal Use	Severe Use		
60000 km /4 years (40000 miles / 4years)	No service required	120000 km (80000 miles)	1.6 - 1.7 L (0.42 - 0.44 U.S gal., 1.69 - 1.79 U.S.qt., 1.41 - 1.49 Imp qt.)	API Service GL-4, SAE 70W • Recommended oil - SHELL : SPIRAX S6 GHME 70W DCTF - SK : HK SYN DCTF 70W - GS CALTEX : GS DCTF HD 70W

Information

Severe usage is defined as

- Driving in dusty, rough roads
- Driving in areas using salt or other corrosive materials or in very cold weather
- Driving in sandy areas
- Driving in mountainous areas
- Driving for patrol car, taxi, commercial car or vehicle towing
- Driving over 170 Km
- Driving in veavy traffic area over 90°F (32°C)
- Driving in areas using salt or other corrosive materials or in very cold weather
- Towing a trailer, or using a camper or roof rack

Inspection

NOTICE

- In principle, the transmission oil is maintenance-free, and no exchange is required.
  But it must be inspected and replenished every 4 years or 40,000 miles.

1. Park the vehicle on flat ground and turn off the engine.
2. Remove the under cover.
   (Refer to Engine Mechanical System - "Engine Room Under Cover")
3. Remove the oil filler plug (A), and check the oil state and oil level.

NOTICE

- Oil level must be up to fill the hole, if not, add oil until it runs over.

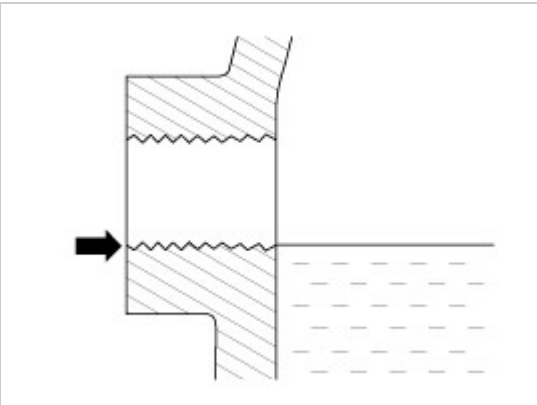

4. Install the filler plug bolt (A) with new gasket.

   Tightening torque :
   58.9 - 78.5 N.m (6.0 - 8.0 kgf.m, 43.4 - 57.8 lb-ft)

5. Install the under cover.
   (Refer to Engine Mechanical System - "Engine Room Under Cover")

Replacement

NOTICE

In principle, the Dual Clutch Transmission (DCT) oil is not changed under normal driving conditions.
However, under harsh driving conditions, it must be changed every 80,000 miles.
Harsh driving conditions are as follows:

- High frequency driving on rough roads (bumpy roads, sand and gravel roads, snow-covered roads, and unpaved roads)
- Frequent driving on mountain trails and inclines
- In case the vehicle is used as a police vehicle, taxi, or for commercial or towing purposes
- Frequent high speed driving (over 170 km/h)
- In case of driving 50% or more of the total mileage in hot temperatures above 32°C and congested traffic

1. Remove the under cover.
   (Refer to Engine Mechanical System - "Engine Room Under Cover")
2. Remove the drain plug (A) and drain all the oil. Then install the drain plug with a new gasket.
   Tightening torque :
   58.9 - 78.5 N.m (6.0 - 8.0 kgf.m, 43.4 - 57.8 lb-ft)

3. Add new oil through the filler plug hole (A) and, fill it just below the plug opening.
   Standard oil :API Service GL-4, SAE 70W
   Recommnend oil
   (SHELL : SPIRAX S6 GHME 70W DCTF, SK : HK SYN DCTF 70W, GS CALTEX : GS DCTF HD 70W)
   Oil capacity :1.6 - 1.7 L (0.42 - 0.44 U.S gal., 1.69 - 1.79 U.S.qt., 1.41 - 1.49 Imp qt.)

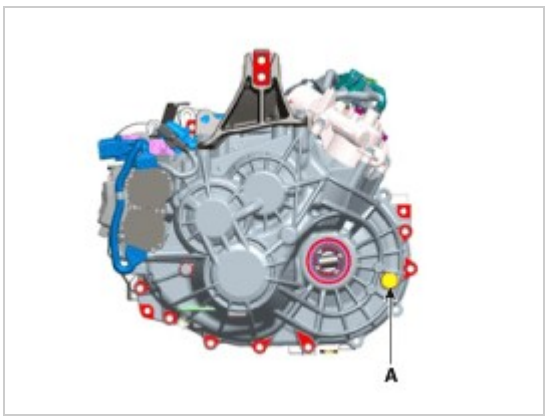

4. Install the filler plug bolt (A) with new gasket.
   Tightening torque :
   58.9 - 78.5 N.m (6.0 - 8.0 kgf.m, 43.4 - 57.8 lb-ft)
5. Install the under cover.
   (Refer to Engine Mechanical System - "Engine Room Under Cover")

DCT (Dual Clutch Transmission) System

Description

The Dual Clutch Transmission (DCT) control system measures required data to identify the state of the control target and computes the appropriate compensation value if adjustment is necessary. The actuator is controlled according to the computed compensation value to obtain desired output.

If transmission or driving-performance-related failure is detected, first perform self-diagnosis and basic transmission inspection (oil check).

Then use the diagnostic tool to inspect the transmission control system components.

Operation principle

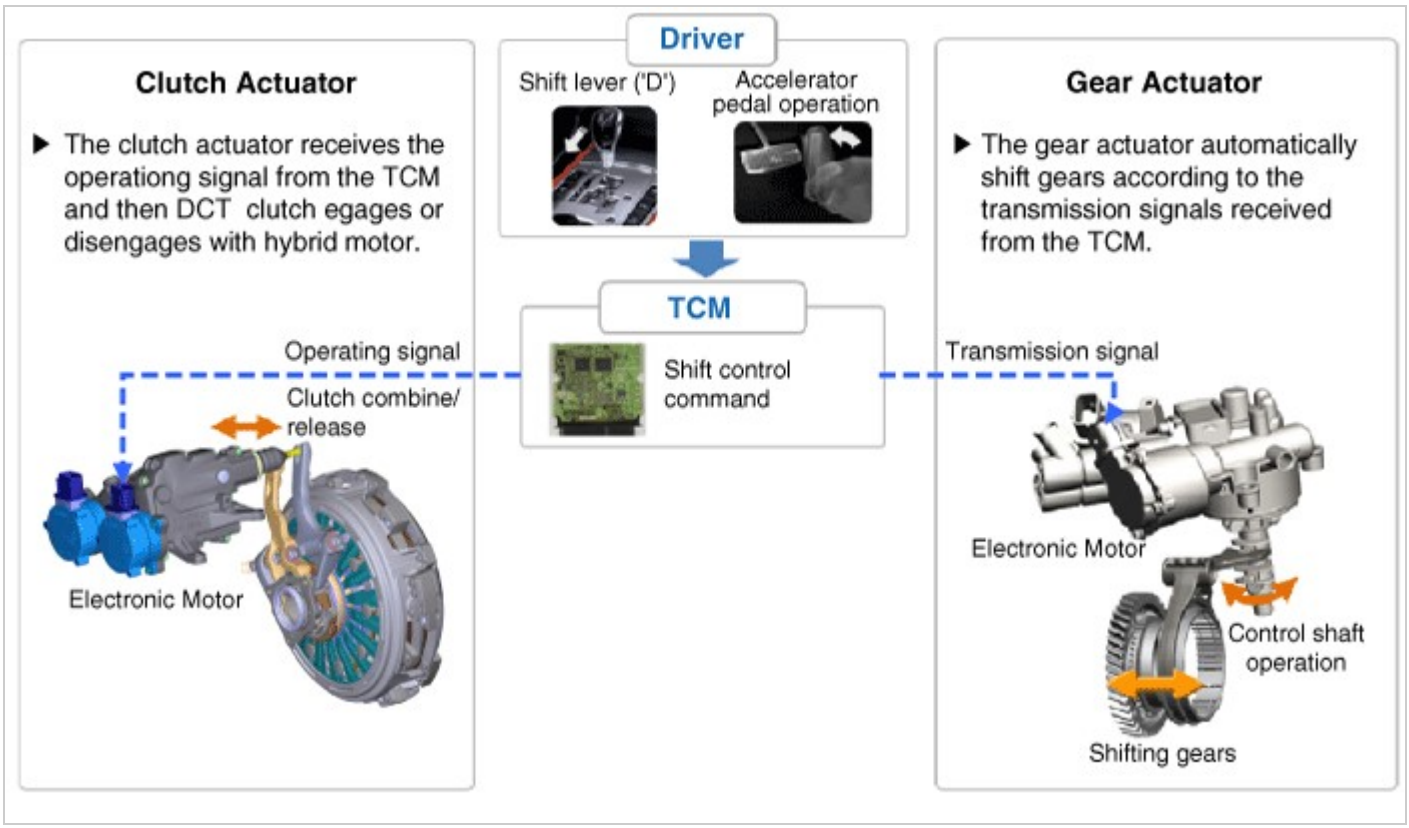

Control System Logic

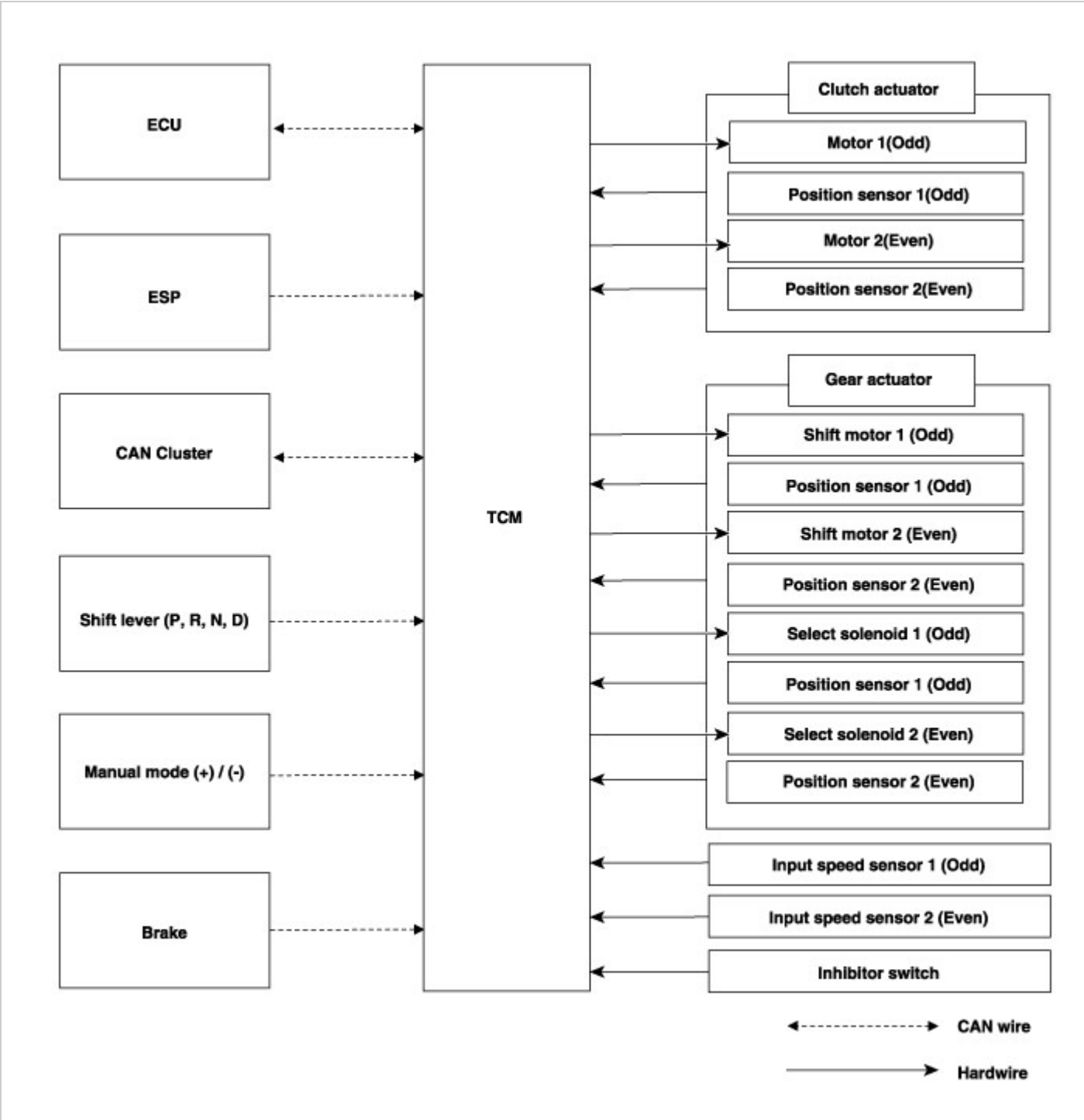

DCT (Dual Clutch Transmission) System

Components

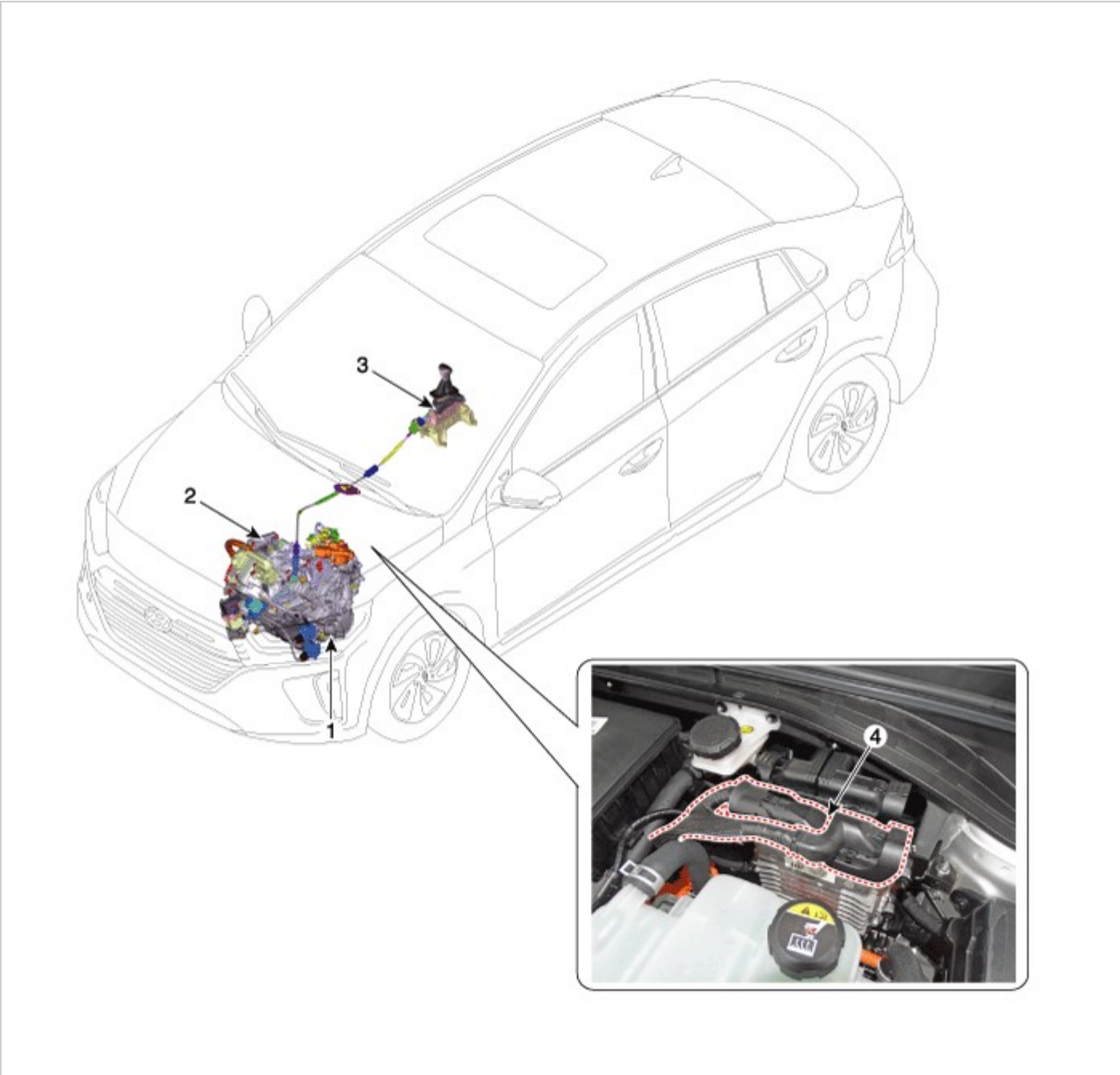

1. Dual Clutch Transmission (DCT) Assembly
2. Hybrid Motor Assembly
3. Shift Lever
4. DCT Control Module (TCM)

DCT (Dual Clutch Transmission) System

Description

- **Function**

  The Transmission Control Module (TCM) is like the brain for the Dual Clutch Transmission (DCT). It receives information from various sensors for a wide range of transmission controls to provide an optimal driving environment for the driver. The TCM is programmed for optimal operation in all driving conditions. If the TCM malfunctions, store the failure information in memory and provide the error information to a mechanic for fast and accurate repair.

DCT (Dual Clutch Transmission) System

1. TCM Connector and Terminal Function

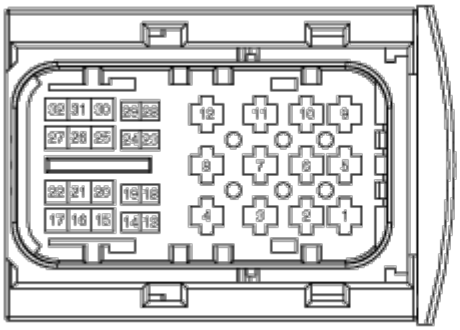

Connector [A]

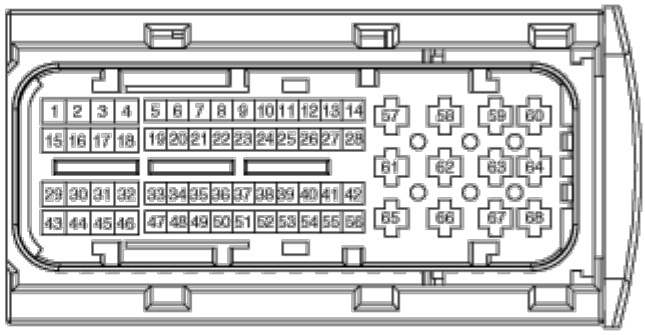

Connector [B]

2. TCM Terminal Function

Connector [A]

Pin	Description	Pin	Description
1	Clutch Actuator (Clutch Motor 1 (ODD)_Phase V)	17	-
2	Clutch actuator (Clutch Motor 2 (EVEN) Phase V)	18	Clutch Actuator (Clutch Motor 1 (ODD)_HALL 1)
3	Select Actuator (Shift Solenoid 2 (EVEN)_Ground)	19	Clutch Actuator (Clutch Motor 1 (ODD)_Supply)
4	Select Actuator (Shift Solenoid 1 (ODD) Push)	20	Select Actuator (Shift Solenoid 1 (ODD)_Sensor Supply)
5	Clutch Actuator (Clutch Motor 1 (ODD)_Phase U)	21	Select Actuator (Shift Solenoid 2 (EVEN)_Sensor Supply)
6	Clutch Actuator (Clutch Motor 2 (EVEN)_Phase U)	22	Select Actuator (Shift Solenoid 2 (EVEN)_Sensor Ouput)
7	Select Actuator (Shift Solenoid 1 (ODD)_Ground)	23	Clutch Actuator (Clutch Motor 2 (EVEN)_HALL 2)
8	Select Actuator (Shift Solenoid 2 (EVEN)_ Pull)	24	Clutch Actuator (Clutch Motor 2 (EVEN)_HALL 3)
9	Clutch Actuator (Clutch Motor1 (ODD)_Phase W)	25	Clutch Actuator (Clutch Motor 2 (EVEN)_Ground)
10	Clutch Actuator (Clutch Motor 2 (EVEN)_Phase W)	26	Select Actuator (Shift Solenoid 1 (ODD)_Sensor Output)
11	Select Actuator (Shift Solenoid 1 (ODD) Pull)	27	-
12	Select Actuator (Shift Solenoid 2 (EVEN) Push)	28	Clutch Actuator (Clutch Motor 2 (EVEN)_HALL 1)
13	Clutch Actuator (Clutch Motor 1 (ODD)_HALL 2)	29	Clutch Actuator (Clutch Motor 2 (EVEN)_Supply)
14	Clutch Actuator (Clutch Motor (ODD)_HALL 3)	30	Select Actuator (Select Solenoid 1 (ODD)_Sensor Ground)
15	Clutch Actuator (Clutch Motor 1 (ODD)_Ground)	31	Select Actuator Select Solenoid 2 (EVEN)_Sensor Ground)
16	-	32	-

Connector [B]

Pin	Description	Pin	Description
1	-	35	-
2	-	36	-
3	ON / START Input	37	-
4	Paddle Shift (Up) Switch signal	38	-
5	Inhibitor Switch "P" Input signal	39	-
6	Inhibitor Switch "R" Input signal	40	-
7	Inhibitor Switch "D" Input signal	41	Shift Actuator (Shift Motor 2 (EVEN) _HALL 2)
8	Sports mode "Down" shift	42	Shift Actuator (Shift Motor 2 (EVEN) _HALL 3)
9	Clutch Speed Sensor (EVEN) Ground	43	Inhibitor Switch "M" Input signal
10	-	44	CAN1 Communication Port1 High
11	-	45	CAN1 Communication Port1 Low
12	-	46	-
13	Shift Actuator (Shift Motor 1 (ODD) _HALL 2)	47	-
14	Shift Actuator (Shift Motor 1 (ODD) _HALL 3)	48	Flex ray High (BP)
15	-	49	Input Speed Supply 1 (ODD)
16	-	50	Input Speed Signal 1 (ODD)
17	Battery Power Low VBD	51	-
18	Paddle Shift Down signal	52	-
19	Shift Lever Select Switch	53	-
20	Inhibitor Switch "N" Input signal	54	Shift Actuator (Shift Motor 2 (EVEN) _Supply)
21	Sports mode "Up" shift	55	Shift Actuator (Shift Motor 2 (EVEN) _HALL 1)
22	-	56	Shift Actuator (Shift Motor 2 (EVEN) _Sensor Ground)
23	Input Speed Supply 2 (EVEN)	57	Power Ground 1 for High Current Modules

24	5V spare supply output	58	Power Ground 2 for High Current Modules
25	-	59	Shift Actuator (Shift Motor 2 (EVEN)_Phase W)
26	Shift Solenoid 1 Position Sensor Output	60	Shift Actuator (Shift Motor 1 (ODD)_Phase W)
27	Select Actuator (Shift Motor 1 (ODD)_HALL 1)	61	Power Ground 3 for High Current Modules
28	Select Actuator (Shift Motor 1 (ODD)_Sensor Ground)	62	-
29	-	63	Shift Actuator (Shift Motor 2 (EVEN)_Phase V)
30	CAN2 Communication Port2 High	64	Shift Actuator (Shift Motor 1 (ODD)_Phase V)
31	CAN2 Communication Port2 Low	65	Motor Supply Voltage 1 from Direct Battery
32	-	66	Motor Supply Voltage 2 from Direct Battery
33	-	67	Shift Actuator (Shift Motor 2 (EVEN)_Phase U)
34	Flex ray bus, BM	68	Shift Actuator (Shift Motor 1 (ODD)_Phase U)

3. Terminal input/output signal

Connector [A]

Pin	Description	Condition	Input / output value	
			Type	Level
1	Clutch Actuator (Clutch Motor 1 (ODD)_Phase V)	Low	Output	0V
		PWM		0V - Battery voltage
2	Clutch actuator (Clutch Motor 2 (EVEN) Phase V)	Low	Output	0V
		PWM		0V - Battery voltage
3	Select Actuator (Shift Solenoid 2 (EVEN) _Ground)	Static on	Output	0V
4	Select Actuator (Shift Solenoid 1 (ODD) Push)	On	Output	9V
		Off		0V
5	Clutch Actuator (Clutch Motor 1 (ODD)_Phase U)	Low	Output	0V
		PWM		0V - Battery voltage
6	Clutch Actuator (Clutch Motor 2 (EVEN)_Phase U)	Low	Output	0V
		PWM		0V - Battery voltage
7	Select Actuator (Shift Solenoid 1 (ODD) Ground)	Static on	Output	0V
8	Select Actuator (Shift Solenoid 2 (EVEN)_ Pull)	On	Output	9V
		Off		0V
9	Clutch Actuator (Clutch Motor1 (ODD)_Phase W)	Low	Output	0V
		PWM		0V - Battery voltage
10	Clutch Actuator (Clutch Motor 2 (EVEN)_Phase W)	Low	Output	0V
		PWM		0V - Battery voltage
11	Select Actuator (Shift Solenoid 1 (ODD) Pull)	On	Output	9V
		Off		0V
12	Select Actuator (Shift Solenoid 2 (EVEN) Push)	On	Output	9V
		Off		0V
13	Clutch Actuator (Clutch Motor 1 (ODD)_HALL 2)	High	Input	4.5V
		Low		0V
14	Clutch Actuator (Clutch Motor 1 (ODD)_HALL 3)	High	Input	4.5V
		Low		0V
15	Clutch Actuator (Clutch Motor 1 (ODD)_Ground)	Ground	Ground	0V
16	-			
17	-			
18	Clutch Actuator (Clutch Motor 1 (ODD)_HALL 1)	High	Input	4.5V
		Low		0V
19	Clutch Actuator (Clutch Motor 1 (ODD)_Supply)	-	Power	8.75V
20	Select Actuator (Shift Solenoid 1 (ODD)_Sensor Supply)	-	Power	8.75V
21	Select Actuator (Shift Solenoid 2 (EVEN)_Sensor Supply)	-	Power	8.75V
22	Select Actuator (Shift Solenoid 2 (EVEN)_Sensor Ouput)	High	Input	4V
		Low		1V
23	Clutch Actuator (Clutch Motor 2 (EVEN)_HALL 2)	High	Input	4.5V
		Low		0V

24	Clutch Actuator (Clutch Motor 2 (EVEN)_HALL 3)	High	Input	4.5V
		Low		0V
25	Clutch Actuator (Clutch Motor 2 (EVEN)_Ground)	Ground	Ground	0V
26	Select Actuator (Shift Solenoid 1 (ODD)_Sensor Output)	High	Input	4V
		Low		1V
27	-			
28	Clutch Actuator (Clutch Motor 2 (EVEN)_HALL 1)	High	Input	4.5V
		Low		0V
29	Clutch Actuator (Clutch Motor 2 (EVEN)_Supply)	-	Power	9V < Battery voltage < 16V
30	Select Actuator (Shift Solenoid 1 (ODD)_Sensor Ground)	Ground	Ground	0V
31	Select Actuator (Shift Solenoid 2 (EVEN)_Sensor Ground)	Ground	Ground	0V
32	-			

Connector [B]

Pin	Description	Condition	Input / output value	
			Type	Level
1				
2				
3	ON / START Input	-	Power	9V < Battery voltage < 16V
4	Paddle Shift (Up) Switch signal	High	Input	9V < Battery voltage < 16V
		Low		0V
5	Inhibitor Switch "P" Input signal	High	Input	9V < Battery voltage < 16V
		Low		0V
6	Inhibitor Switch "R" Input signal	High	Input	9V < Battery voltage < 16V
		Low		0V
7	Inhibitor Switch "D" Input signal	High	Input	9V < Battery voltage < 16V
		Low		0V
8	Sports mode "Down" shift	High	Input	9V < Battery voltage < 16V
		Low		0V
9	Clutch Speed Sensor (EVEN) Ground	High	Input	0.448V
		Low		0.224V
10	-			
11	-			
12	-			
13	Shift Actuator (Shift Motor 1 (ODD) _HALL 2)	High	Input	4.5V
		Low		0.8
14	Shift Actuator (Shift Motor 1 (ODD) _HALL 3)	High	Input	4.5V
		Low		0.8
15	-			
16	-			
17	Battery Power Low VBD	-	Power	9V < Battery voltage < 16V
18	Paddle Shift Down signal	High	Input	9V < Battery voltage < 16V
		Low		0V
19	Shift Lever Select Switch	High	Input	9V < Battery voltage < 16V
		Low		0V
20	Inhibitor Switch "N" Input signal	High	Input	9V < Battery voltage < 16V
		Low		0V
21	Sports mode "Up" shift	High	Input	9V < Battery voltage < 16V
		Low		0V

22	-			
23	Input Speed Supply 2 (EVEN)	-	Power	8.75V
24	5V spare supply output	-	Power	5V
25	-			
26	Shift Solenoid 1 Position Sensor Output		Power	8.75V
27	Select Actuator (Shift Motor 1 (ODD)_HALL 1)	High	Input	4.5V
		Low		0V
28	Select Actuator (Shift Motor 1 (ODD)_Sensor Ground)			
29	-			
30	CAN2 Communication Port2 High	Rec./Dom	CAN Line	Recessive : 2.5V
				Dominant : 3.5V
31	CAN2 Communication Port2 Low	Rec./Dom	CAN Line	Recessive : 2.5V
				Dominant : 1.5V
32	-			
33	-			
34	Flex ray bus, BM	Idle	CAN Line	Idle : 2.5V
		Differential		Differential : 2.0 V / 3.0 V
35	-			
36	-			
37	-			
38	-			
39	-			
40	-			
41	Shift Actuator (Shift Motor 2 (EVEN) _HALL 2)	High	Input	4.5V
		L:ow		0.8V
42	Shift Actuator (Shift Motor 2 (EVEN) _HALL 3)	High	Input	4.5V
		L:ow		0.8V
43	Inhibitor Switch "M" Input signal	High	Input	9V < Battery voltage < 16V
		Low		0V
44	CAN1 Communication Port1 High	Idle	CAN Line	
		Differential		
45	CAN1 Communication Port1 Low	Idle./DiFF	Rec./Dom	Recessive : 2.5V Dominant : 3.5V
46	-			
47	-			
48	Flex ray High (BP)	Idle./DiFF	CAN Line	Idle : 2.5V
				Differenital : 2.0V / 3.0V
49	Input Speed Supply 1 (ODD)	-	Power	8.75V
50	Input Speed Signal 1 (ODD)	High	Input	0.448V
		Low		0.224V
51	-			
52	-			
53	-			

54	Shift Actuator (Shift Motor 2 (EVEN) _Supply)	-	Power	8.75V
55	Shift Actuator (Shift Motor 2 (EVEN) _HALL 1)	High	Input	4.5V
		Low		0.8V
56	Shift Actuator (Shift Motor 2 (EVEN) _Sensor Ground)	Ground	Ground	Ground
57	Power Ground 1 for High Current Modules	Ground	Ground	Ground
58	Power Ground 2 for High Current Modules	Ground	Ground	Ground
59	Shift Actuator (Shift Motor 2 (EVEN)_Phase W)	Low	Output	0V
		PWM		0V - Battery voltage
60	Shift Actuator (Shift Motor 1 (ODD)_Phase W)	Low	Output	0V
		PWM		0V - Battery voltage
61	Power Ground 3 for High Current Modules	Ground	Ground	Ground
62	-			
63	Shift Actuator (Shift Motor 2 (EVEN)_Phase V)	Low	Output	0V
		PWM		0V - Battery voltage
64	Shift Actuator (Shift Motor 1 (ODD)_Phase V)	Low	Output	0V
		PWM		0V - Battery voltage
65	Motor Supply Voltage 1 from Direct Battery	-	Power	9V < Battery voltage < 16V
66	Motor Supply Voltage 2 from Direct Battery	-	Power	9V < Battery voltage < 16V
67	Shift Actuator (Shift Motor 2 (EVEN)_Phase U)	Low	Output	0V
		PWM		0V - Battery voltage
68	Shift Actuator (Shift Motor 1 (ODD)_Phase U)	Low	Output	0V
		PWM		0V - Battery voltage

Inspection

Transmission Control Module (TCM) Inspection Procedure

1. Inspecting TCM ground circuit: Measure the resistance between the TCM and chassis ground.
   (Check the terminal connected to the chassis ground while using the back of the harness connector as the base point for TCM.)
   Normal reading (resistance) : Below 1Ω
2. Inspecting the TCM connector: Disconnect the TCM connector and visually inspect to see whether there is a bend on the ground terminal of the harness connector. Also visually check the connection pressure.
3. If no problem is found during inspection in step 1 and step 2, then the problem is with the TCM itself. In this case, replace the TCM and inspect the vehicle again.
4. Re-inspecting TCM: Install the TCM that was determined to have malfunctioned from step 3 in another vehicle. Reset the error code and then check the operation in that vehicle. If the vehicle operates without any problems, then inspect the first vehicle with the initial problem again.

Removal

1. Turn ignition switch OFF and disconnect the battery negative (-) terminal.
2. Disconnect the TCM connector (A).

3. Remove the TCM from the vehicle after loosen the bolts (A-4ea).

Installation

1. Install in the reverse order of removal.

> **NOTICE**
> Perform the clutch touch point learning procedure using the GDS after replacing TCM.

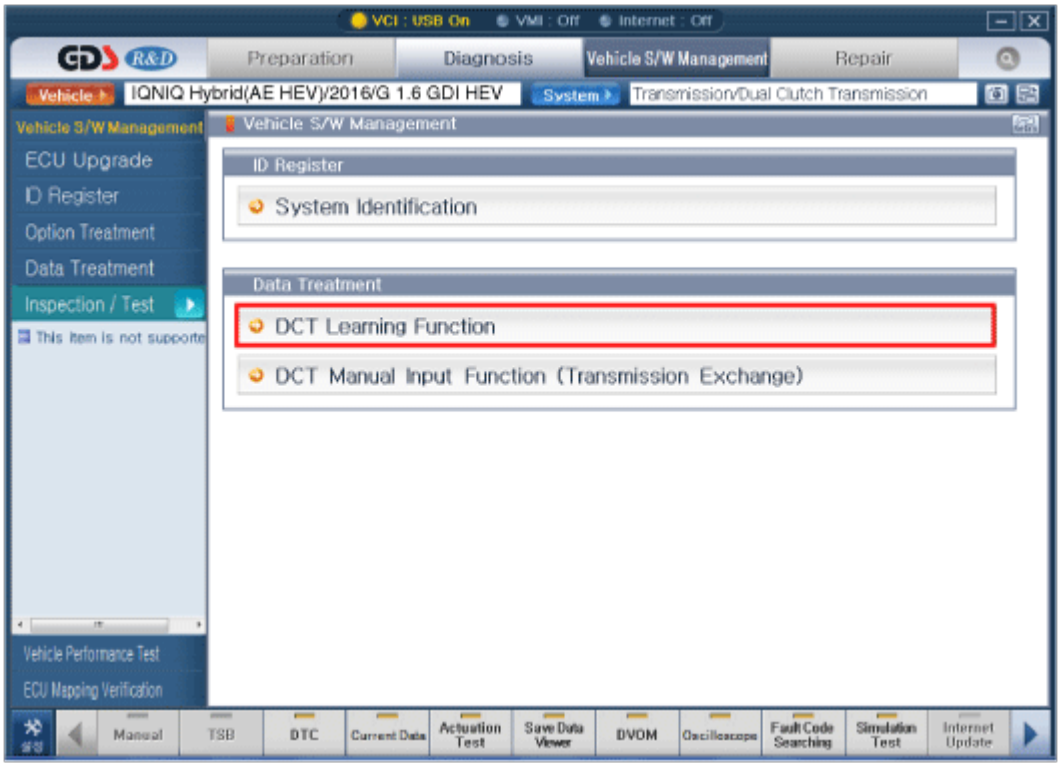

DCT (Dual Clutch Transmission) System

Components

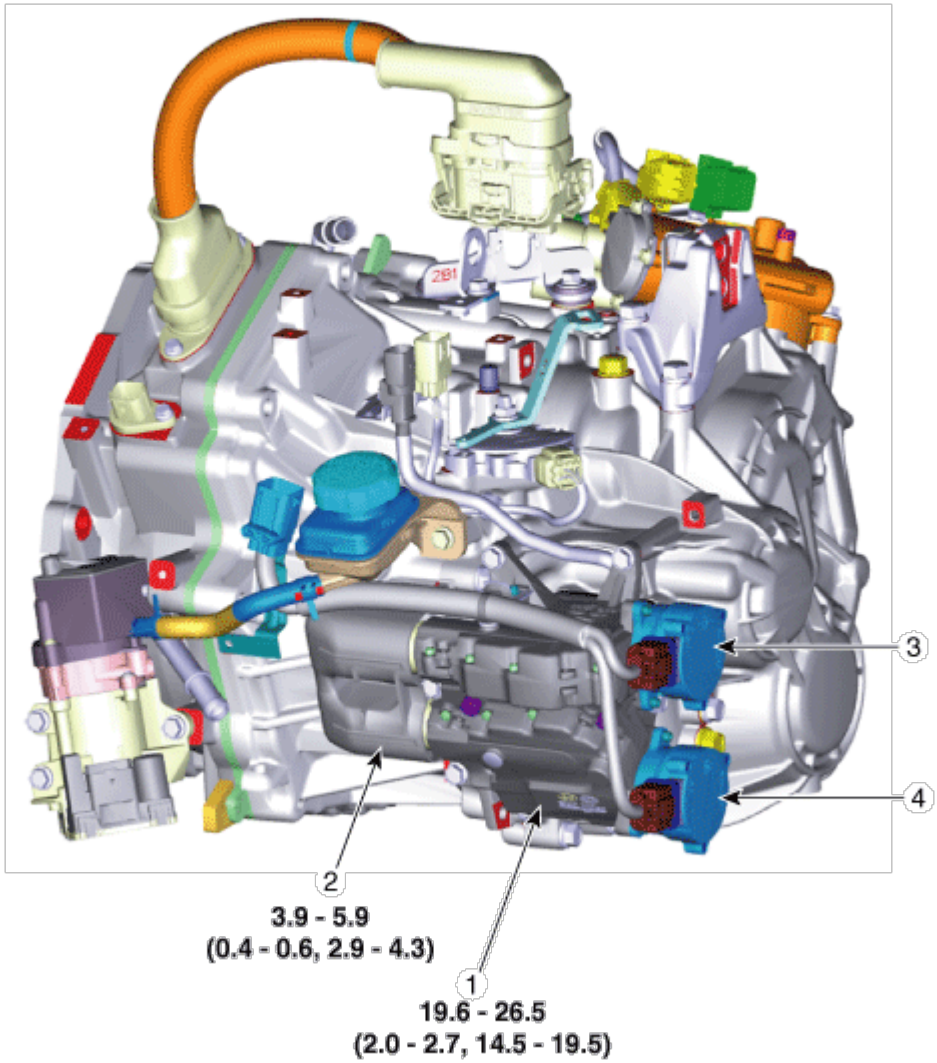

Tightening Torque : N.m (kgf.m, lb-ft)

1. Clutch Actuator Assembly
2. Fork Cover
3. Clutch Actuator Motor (Odd)
4. Clutch Actuator MOtor (Even)

DCT (Dual Clutch Transmission) System

Specification

Item	Condition	Specifications
Resistance (line to line)	Motor 1	57 mΩ ±10 %
	Motor 2	57 mΩ ± 10 %
Rated voltage		12 V
Max. current		60 A
Operation condition (°C)°F		-40 to 257 °F (- 40 to 125 °C)

DCT (Dual Clutch Transmission) System

Description

- **Components location :**DCT (Dual Clutch Transmission)

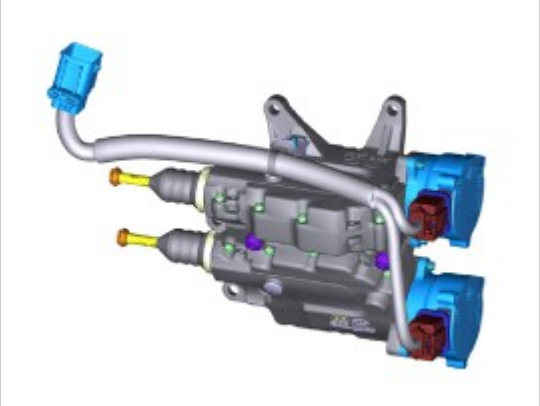

- **Function**

  The clutch actuator receives signals from the Transmission Control Module (TCM) and controls the clutch.

DCT (Dual Clutch Transmission) System

Circuit Diagram

[Circuit Diagram]

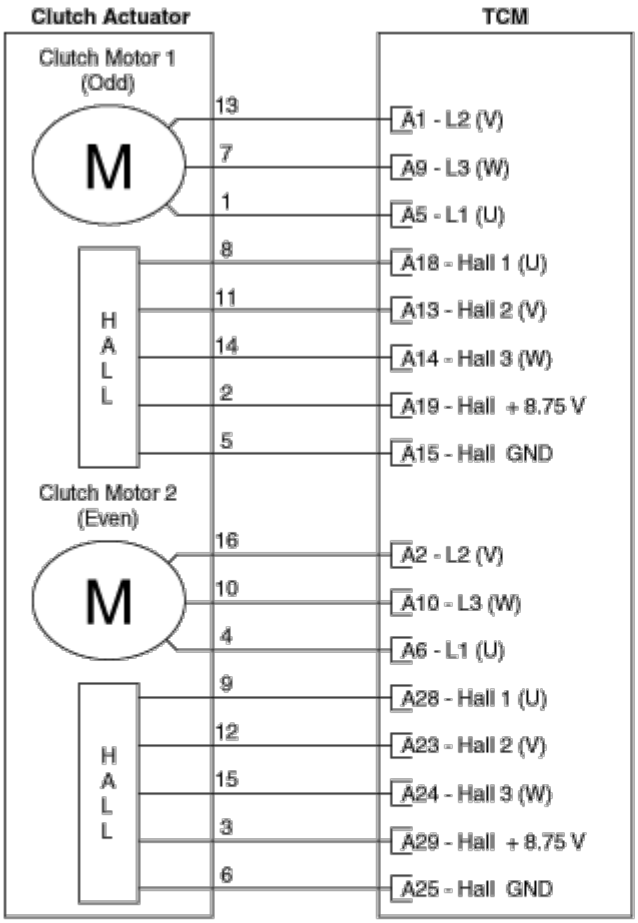

[Connection Information]

Terminal	Connected to	Function
1	TCM(A5)	Phase "U" (Clutch 1)
2	TCM(A19)	Hall supply (Clutch 1)
3	TCM(A29)	Hall supply (Clutch 2)
4	TCM(A6)	Phase "U" (Clutch 2)
5	TCM(A15)	Hall GND (Clutch 1)
6	TCM(A25)	Hall GND (Clutch 2)
7	TCM(A9)	Phase "W" (Clutch 1)
8	TCM(A18)	Hall 1 (Clutch 1)
9	TCM(A28)	Hall 1 (Clutch 2)
10	TCM(A10)	Phase "W" (Clutch 2)
11	TCM(A13)	Hall 2 (Clutch 1)
12	TCM(A23)	Hall 2 (Clutch 2)
13	TCM(A1)	Phase "V" (Clutch 1)
14	TCM(A14)	Hall 3 (Clutch 1)
15	TCM(A24)	Hall 3 (Clutch 2)
16	TCM(A2)	Phase "V" (Clutch 2)

[Harness Connector]

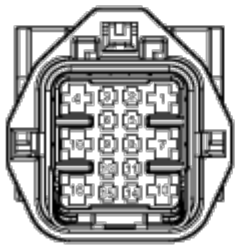

Clutch Actuator Connector

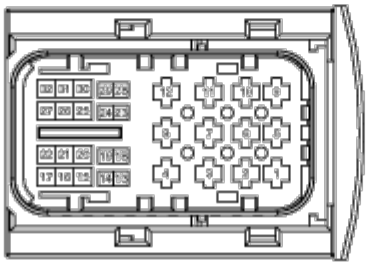

Connector [A]
TCM

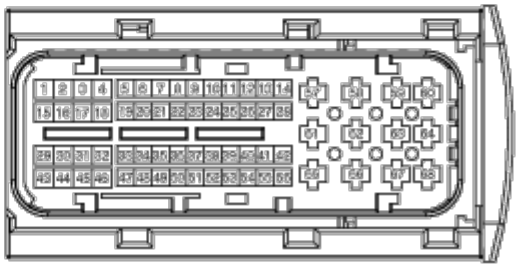

Connector [B]
TCM

DCT (Dual Clutch Transmission) System

Removal

1. Turn ignition switch OFF and disconnect the battery negative (-) terminal.

2. Remove the engine room under cover.
   (Refer to Engine Mechanical System - "Engine Room Under Cover")
3. Disconnect the clutch actuator connector (A).

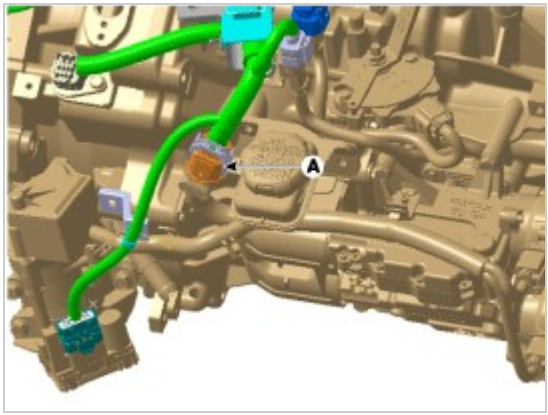

4. Remove the fork cover (A).

Tightening torque :
3.9 - 5.9 N.m (0.4 - 0.6kgf.m, 2.9 - 4.3 lb-ft)

5. Remove the hybrid motor mounting bolts (A, B)

Tightening torque :
42.2 - 53.9 N.m (4.3 - 5.5 kgf.m, 31.1 - 39.8 lb-ft)

6. Fix the clutch engagement fork after installing special service tool (09430-G2100).

7. Remove the clutch actuator (A).

Tightening torque :

19.6 - 26.5 N.m (2.0 - 2.7kgf.m, 14.5 - 19.5 lb-ft)

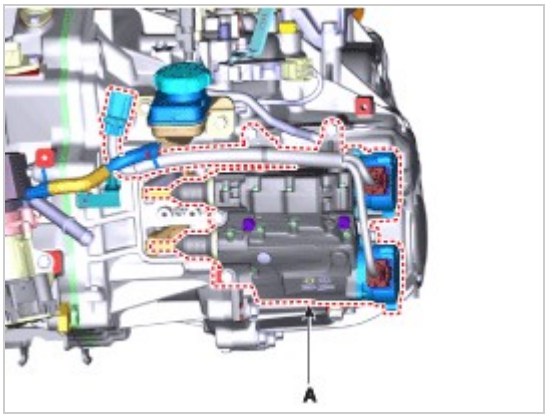

8. If you have replaced the double clutch assembly or clutch actuator, perform wear compensation on the clutch actuator. (Refer to Clutch Actuator Assembly - "Adjustment")

Information

1) Replace the "clutch actuator" only → Rewind the rod to adjust rod length
2) Replace the "double clutch assembly" only → Initialize the rod length.
3) Replace the both double clutch assembly and clutch actuator only → No action necessary

CAUTION

- If you only replace a motor, you don"t need separate adjustment. If you replace a clutch actuator with a new one, make sure that you don"t perform initialization.

Installation

1. Install in the reverse order of removal.

NOTICE

- Perform the work procedures for abrasion compensation reset before installing the new clutch actuator assembly. (Refer to Clutch actuator assembly - "Adjustment")
- Check the assembled state of the dowel pins (A) before installing the clutch actuator assembly.

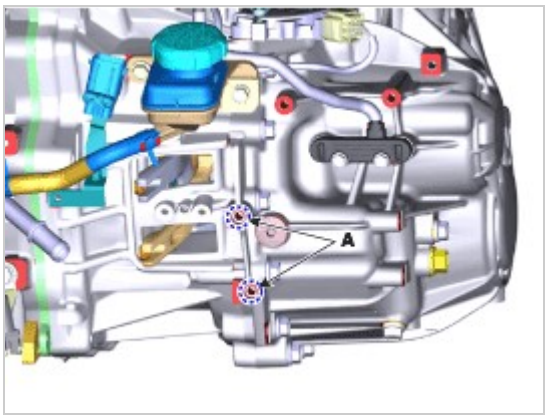

- Perform the clutch touch point learning procedure using the GDS after replacing the clutch actuator assembly.

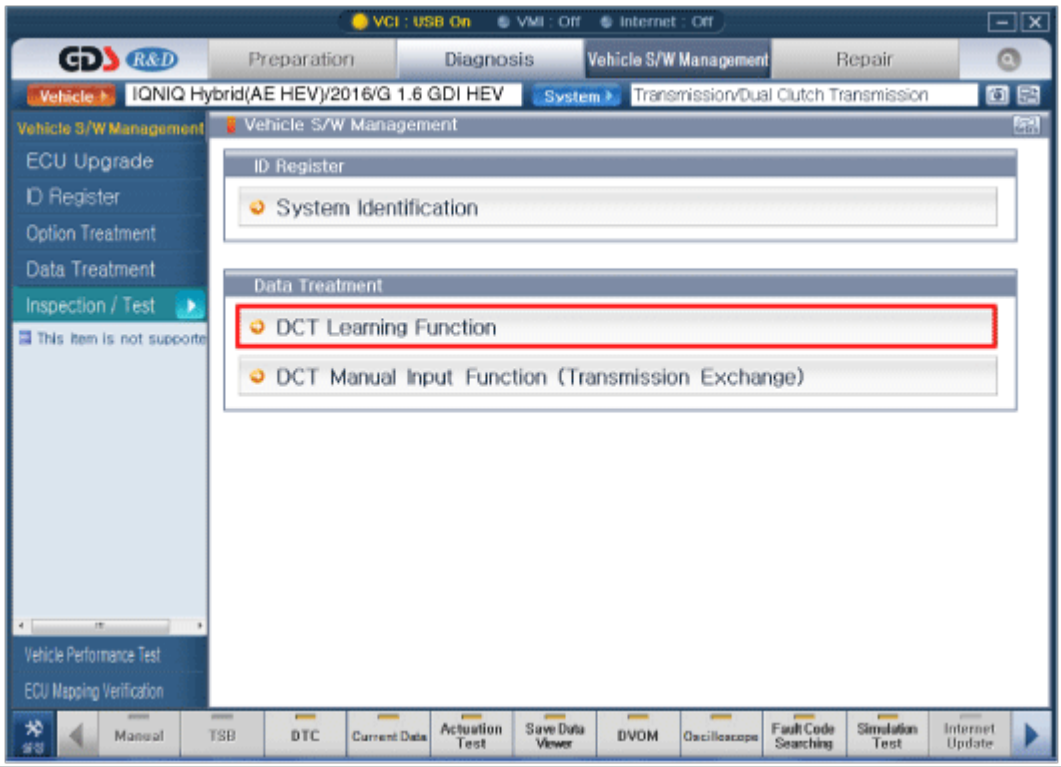

NOTICE

- Even if you removed and reinstalled the clutch actuator, be sure to perform the touch point learning.
- If you have replaced the dual clutch assembly or clutch actuator, be sure to perform the touch point learning.

Adjustment

CAUTION

If you replaced the double clutch assembly or clutch actuator, be sure to perform wear compensation by referring to the following table.

Case	Replaced Part	Wear Compensation (Clutch Actuator)
A	Clutch actuator only	Rewind the rod to adjust rod length.
B	Double clutch assembly only	Initialize the rod length.
C	Both double clutch assembly and clutch actuator	No action necessary

A. Rewinding the rod to adjust rod length (when only the clutch actuator is replaced)

CAUTION

Be sure to perform it when you have replaced the clutch actuator but reuse the double clutch assembly.
It is performed to adjust the rod length of a new clutch actuator to that of an old clutch actuator.

1. Remove the clutch actuator assembly.
   (Refer to Clutch Actuator Assembly - "Removal")

   Information

   To measure the rod length of an old clutch actuator, perform the steps No. 2 - 7 of the following procedure.

2. Install the clutch actuator (A) on special service tool (09430-F0100) and fix the actuator using nuts.

3. Disconnect the clutch actuator motor extension (A).

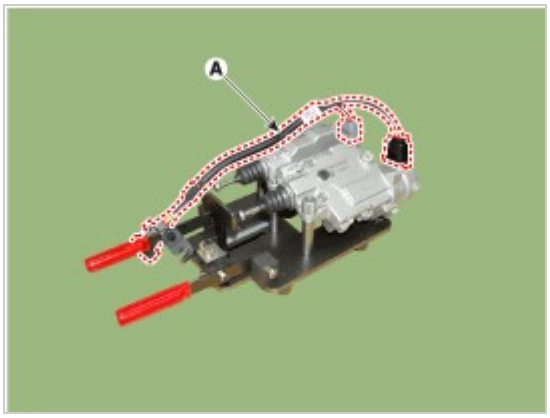

4. Remove the clutch actuator motor 1(A), 2(B).

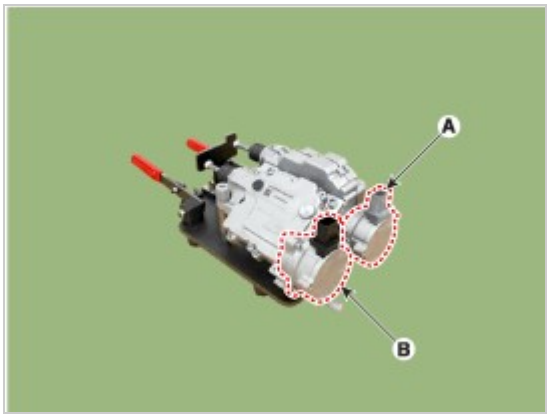

5. Insert the special service tool (09430-F0100) to ball screw and rotate counter-clockwise until "click" sound is heard.

⚠ CAUTION

- In some cases, you may not hear a "click" sound even if you rotate the tool counter-clockwise. In such vehicles, rotate the tool counter-clockwise until it won"t rotate anymore.
- You need to stop rotating the tool at the position where it won"t rotate anymore. If you continue to rotate it counter-clockwise, the actuator may become damaged.

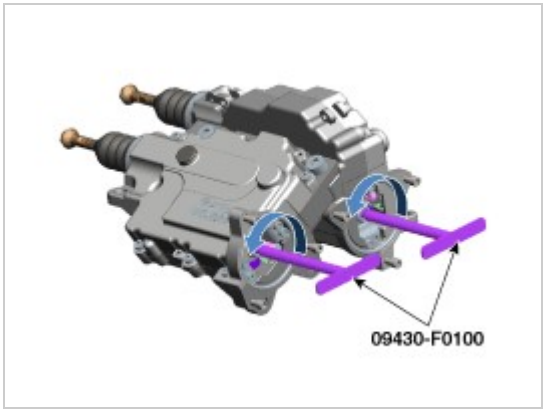

6. Measure the rewound rod length (C) of the clutch actuator removed from the vehicle.

Rewound length (C) : Distance from the reference plane (A) to the end of the rod (B)

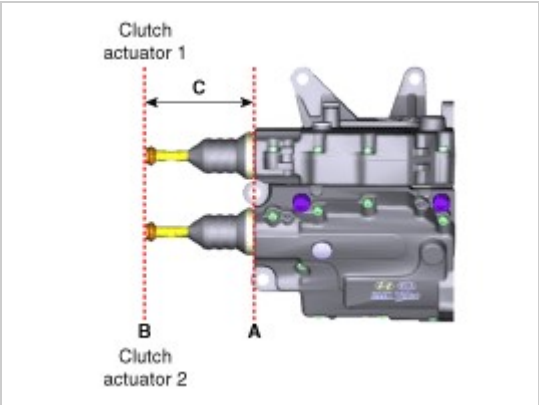

⚠ CAUTION

If the rod length is less than 37mm (1.4567in.), replace all of the dual clutch assembly, clutch actuator, engagement bearing and engagement fork.

7. Pull the lever (A) until "click" sound is heard and then measure the length to check for pull rod length of faulty clutch actuator (B).

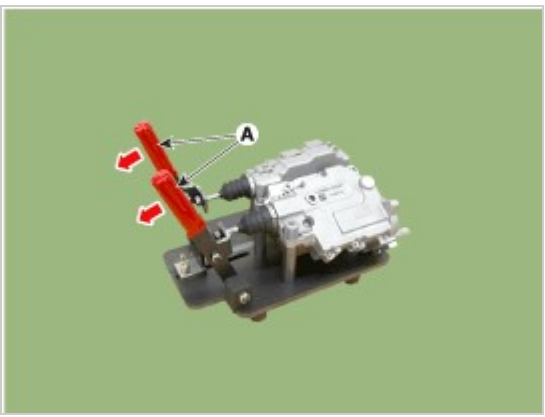

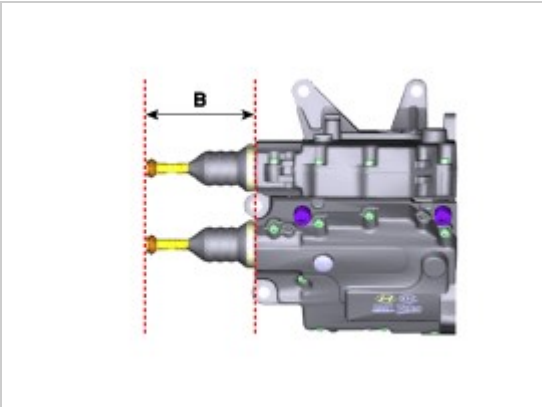

8. Remove the clutch actuator from the special service tool (09430-F0100).

Information

To match the rod length of a new clutch actuator with that of the clutch actuator removed from the vehicle, perform the steps No. 9 - 18 of the following procedure.

9. Install the new clutch actuator (A) on special tool (09430-F0100) and fix the actuator using nuts.

10. Disconnect the clutch actuator motor extension connector (A).

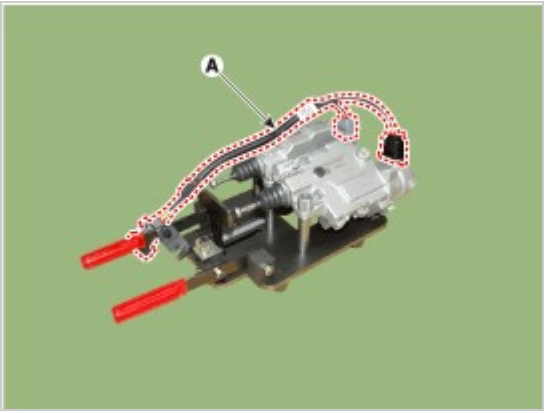

11. Remove the clutch actuator motor 1(A), 2(B).

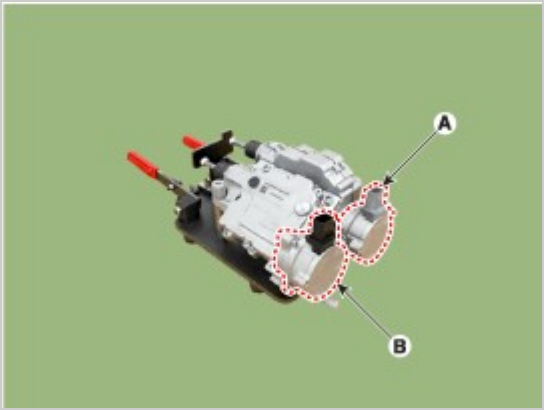

12. Insert the special service tool (09430-F0100) to ball screw and rotate counter-clockwise until "click" sound is heard.

⚠ CAUTION

- In some cases, you may not hear a "click" sound even if you rotate the tool counter-clockwise. In such vehicles, rotate the tool counter-clockwise until it won"t rotate anymore.
- You need to stop rotating the tool at the position where it won"t rotate anymore. If you continue to rotate it counter-clockwise, the actuator may become damaged.

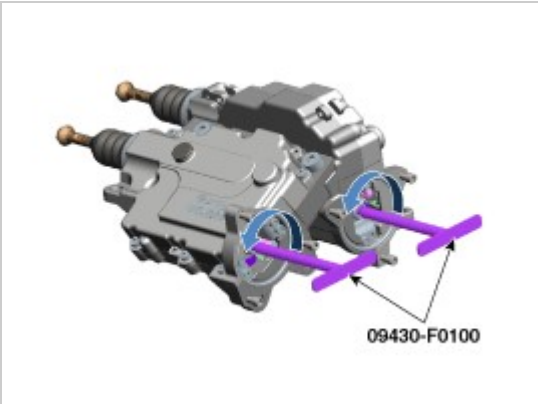

13. Remove the sealing rubber (C).

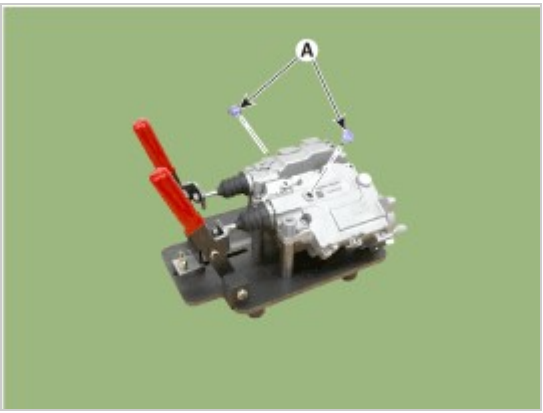

14. Insert a special tool (09430-C1300) to a sealing rubber hole.
Rotate the tool clockwise to match the rod length of a new clutch actuator with the "rewound length" measured at the step No. 6.

⚠ CAUTION

If the rewound length of a new clutch actuator is not the same as that of the clutch actuator removed from the vehicle, DCT shift shock may occur.

Information

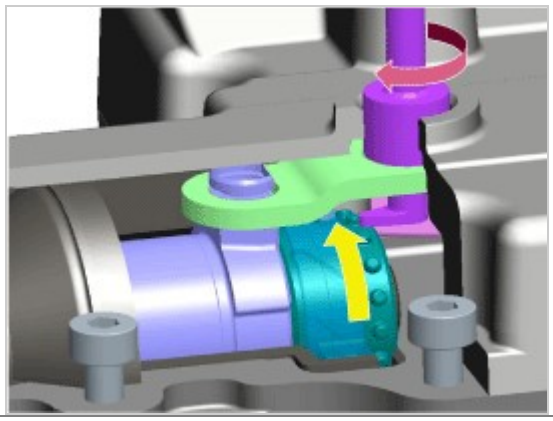	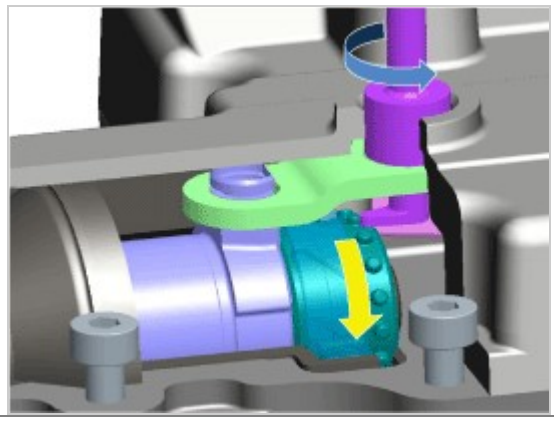
Clockwise rotation:The length of the pull rod is shortened.	Counter Clockwise rotation:The length of the pull rod is lengthened.

15. After pulling the lever (A) until "click" sound is heard, measure the length (B) and check that it is the same as the length measured in step 7.

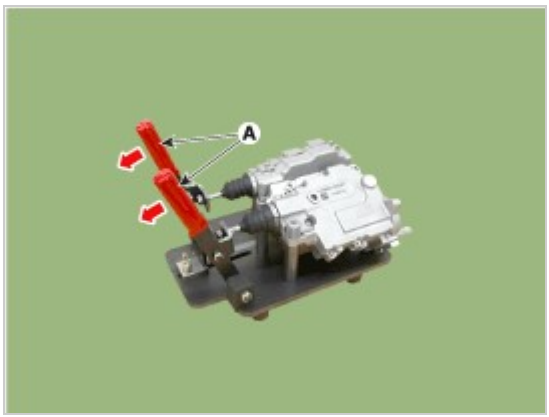

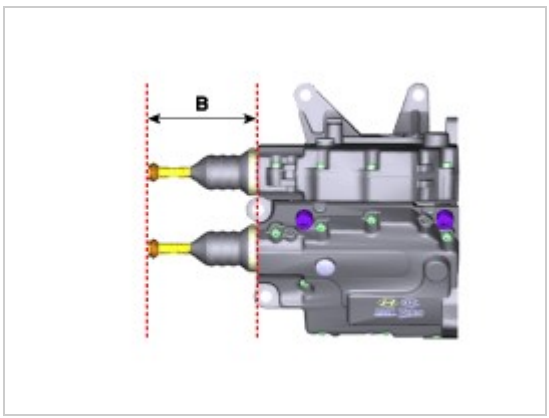

16. Install the sealing rubber (A).

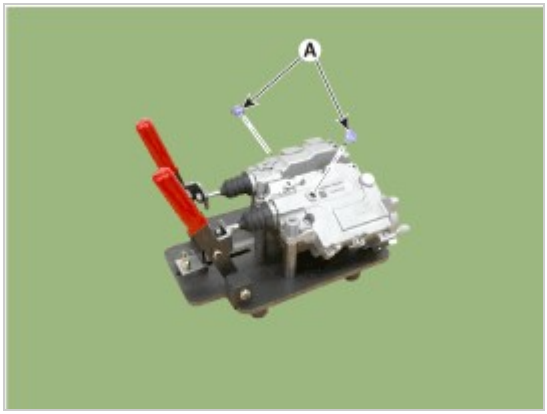

17. Install the clutch actuator motor 1(A), and 2(B).

Tightening torque :
3.9 - 5.9 N·m (0.4 - 0.6 kgf·m, 2.9 - 4.3 lb·ft)

NOTICE

- Carefully check and install the O-rings (C).

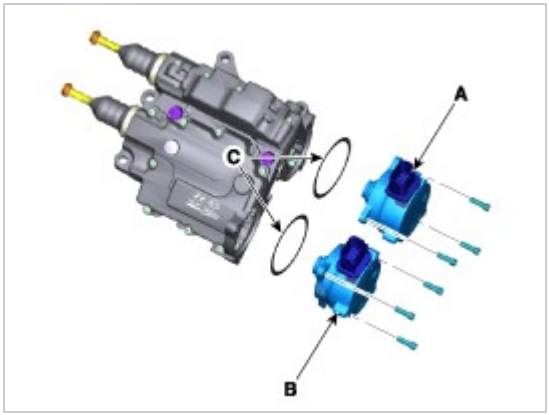

18. Connect the clutch actuator motor extension connector (A).

Information

Items	Component connector	Harness connector
Motor 1	Grey	
Motor 2	Black	

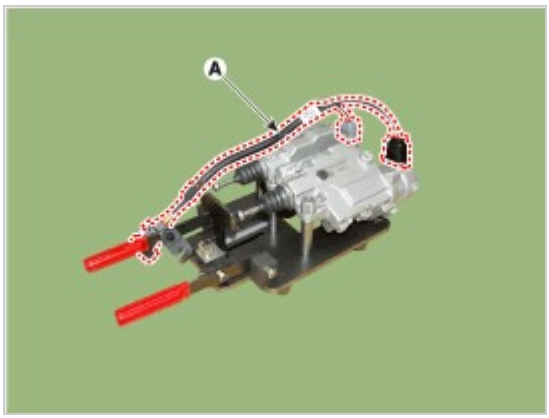

B. Initializing the rod length (when only the dual clutch assembly is replaced)

CAUTION
Be sure to perform it when you have replaced the dual clutch assembly but reuse the clutch actuator.
It is performed to adjust the rod length of an old clutch actuator to that of a new clutch actuator.

1. Remove the clutch actuator.
   (Refer to Clutch Actuator Assembly - "Removal")
2. Install the clutch actuator (A) on special service tool (09430-F0100) and fix the actuator using nuts.

3. Disconnect the clutch actuator motor extension (A).

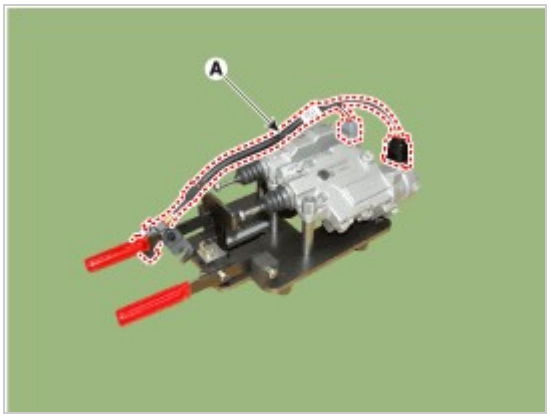

4. Remove the clutch actuator motor 1(A), 2(B).

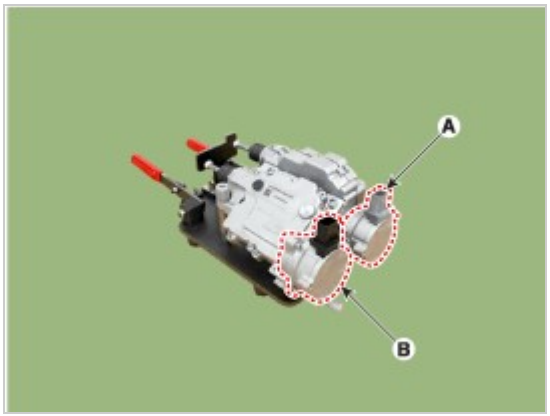

5. Insert the special service tool (09430-F0100) to ball screw and rotate counter-clockwise until "click" sound is heard.

⚠ CAUTION

- In some cases, you may not hear a "click" sound even if you rotate the tool counter-clockwise. In such vehicles, rotate the tool counter-clockwise until it won"t rotate anymore.
- You need to stop rotating the tool at the position where it won"t rotate anymore. If you continue to rotate it counter-clockwise, the actuator may become damaged.

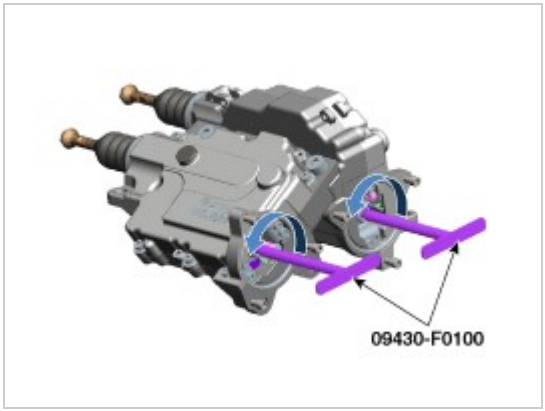

6. Set a T-plate (B) at a 64mm (2.5196 in). position, which is the rod length of a new clutch actuator, and fix it with a nut (A).

   New part length :64mm (2.5196 in).

7. Remove the sealing rubber (C).

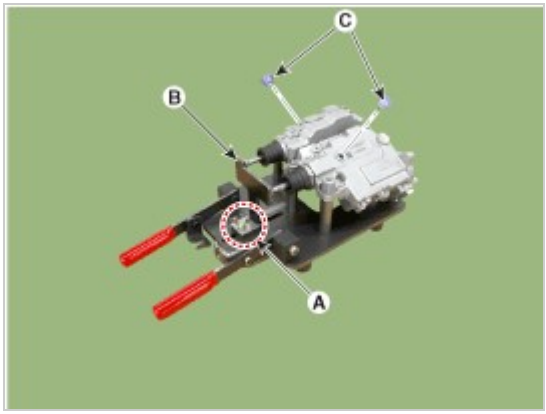

8. Insert special service tool (09430-C1300) to the sealing rubber hole and then move to the T plates (A) by rotating counter-clockwise.

> **⚠ CAUTION**
> - Rotate the tool until the rod touches the T-plate.
> - You need to stop rotating the tool when the rod touches the T-plate because, if you continue rotating the tool, the rod does not stop and continue to move.
> - If you rotate the tool too much, the rod may be separated from the actuator.

9. Fix the pull rod to hook (B) and install the sealing rubber (A).

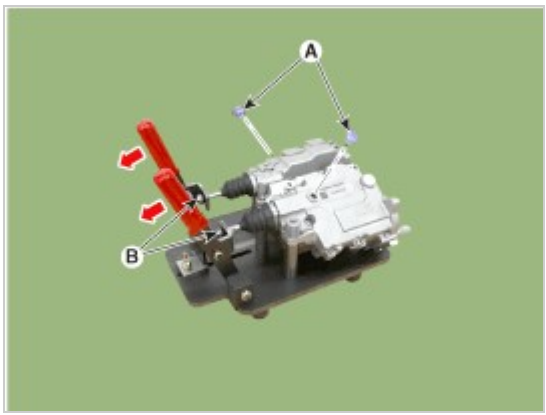

10. Pull the lever (A) until "click" sound is heard and then measure the length again to check for specified length (B).

Specified length :82.5 mm (3.2480 in.)

> **⚠ CAUTION**
> If the rod length is not initialized to 82.5 mm during initialization of wear compensation, DCT shift shock may occur.

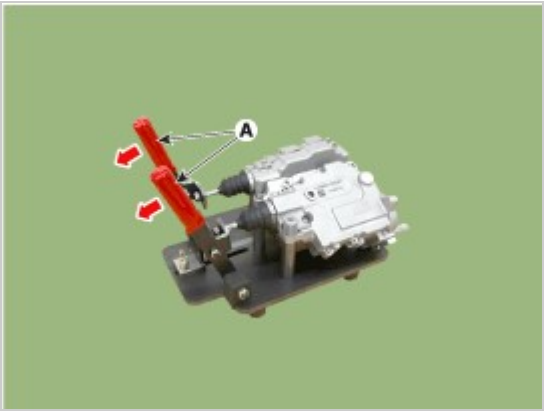

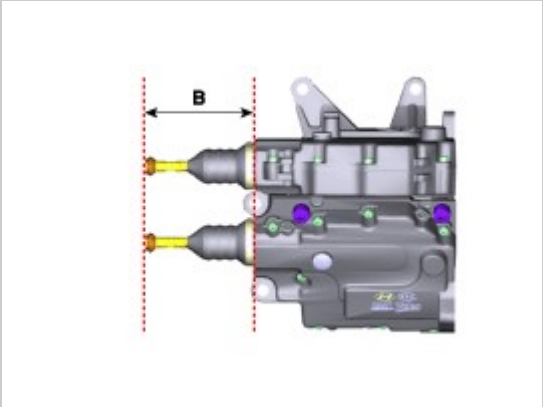

11. Install the clutch actuator motor 1(A), and 2(B).

Tightening torque :
3.9 - 5.9 N·m (0.4 - 0.6 kgf·m, 2.9 - 4.3 lb·ft)

NOTICE

- Carefully check and install the O-rings (C).

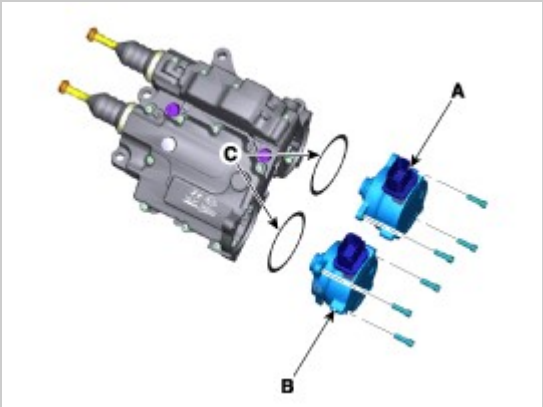

12. Connect the clutch actuator motor extension connector (A).

Information

Items	Component connector	Harness connector
Motor 1	Grey	
Motor 2	Black	

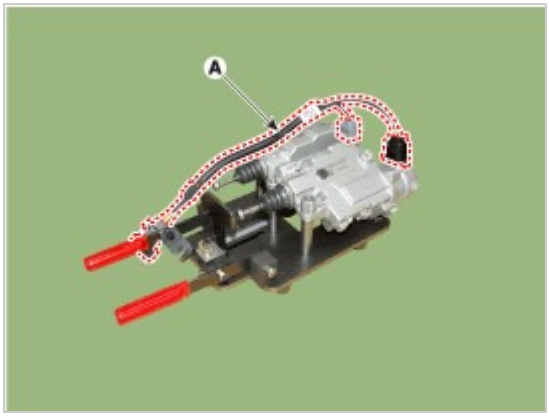

DCT (Dual Clutch Transmission) System

Components

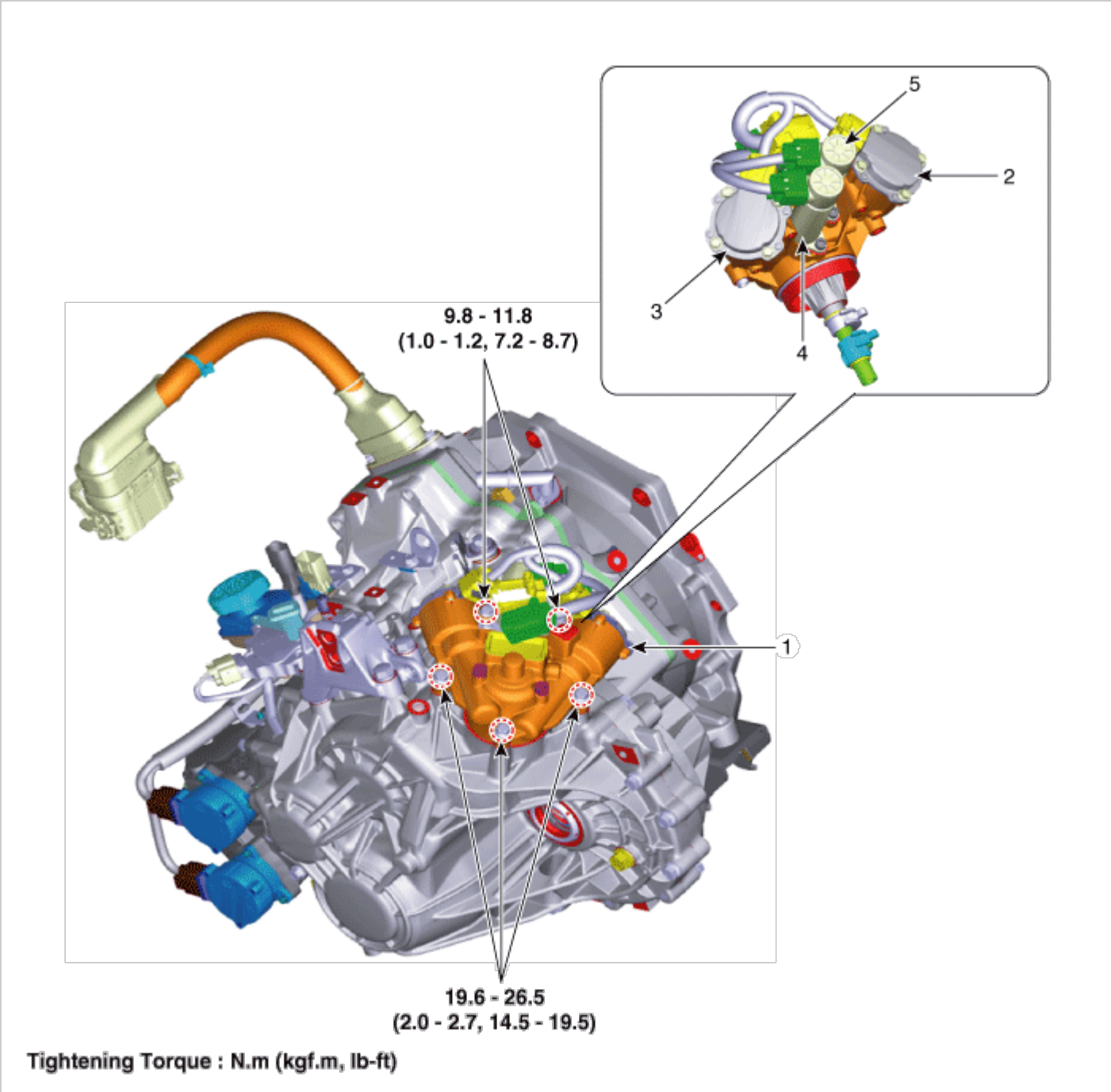

1. Gear actuator assembly
2. Shift motor (Even)
3. Shift motor (Odd)
4. Select solenoid (Even)
5. Select solenoid (Odd)

DCT (Dual Clutch Transmission) System

Specification

Item	Condition	Specification
Resistance (line to line)	Shift motor 1/2	126.4 mΩ ± 10 %
	Select solenoid 1/2	0.7 mΩ ± 10 %
Max. current	Shift motor 1/2	45 A
	Select solenoid 1/2	20 A
Select solenoid sensor output	Push	4.0 ± 0.15 V
	Pull	1.0 ± 0.15 V
Operation condition (°C)°F		-40 to 257 °F (- 40 to 125 °C)
Rated voltage		13 V
Sensor supply voltage		8.75 V

DCT (Dual Clutch Transmission) System

Description

- **Components location :**DCT (Dual Clutch Transmission)

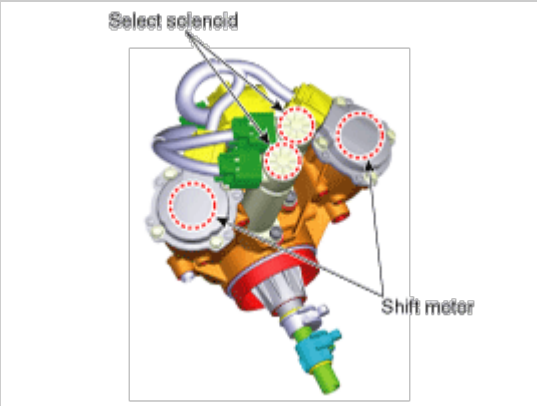

- **Function**

  The gear actuator is comprised of the shift motor and select solenoid.

  Gear actuator shift motor and select solenoid receive signals from TCM to control the gear.

DCT (Dual Clutch Transmission) System

Circuit Diagram

[Circuit Diagram]

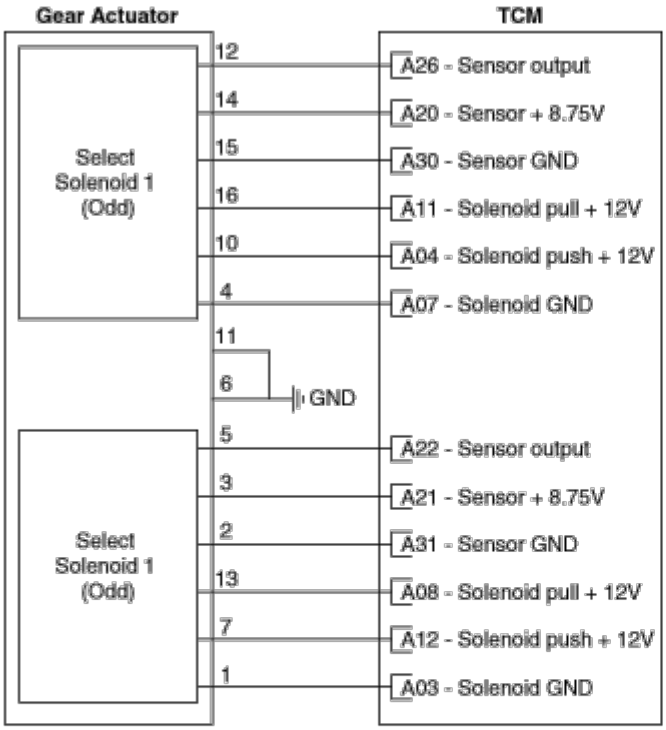

[Connection Information]

Terminal	Connected to	Function
1	TCM(A03)	GND (Select 2)
2	TCM(A31)	Position GND (Select 2)
3	TCM(A21)	Position supply (Select 2)
4	TCM(A07)	GND (Select 1)
5	TCM(A22)	Position signal (Select 2)
6	-	GND
7	TCM(A12)	Push (Select 2)
8	-	-
9	-	-
10	TCM(A04)	Push (Select 1)
11	-	GND
12	TCM(A26)	Position signal (Select 1)
13	TCM(A08)	Pull (Select 2)
14	TCM(A20)	Position supply (Select 1)
15	TCM(A30)	Position GND (Select 1)
16	TCM(A11)	Pull (Select 1)

[Harness Connector]

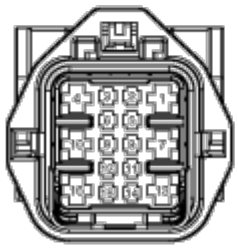

Select Actuator Connector

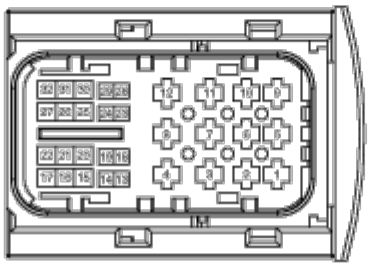

Connector [A]
TCM

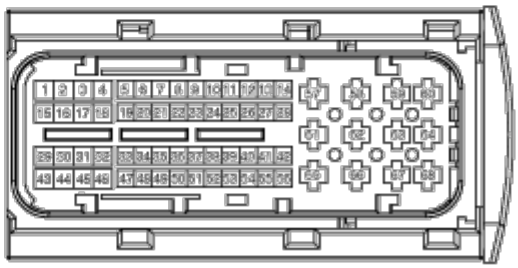

Connector [B]
TCM

[Circuit Diagram]

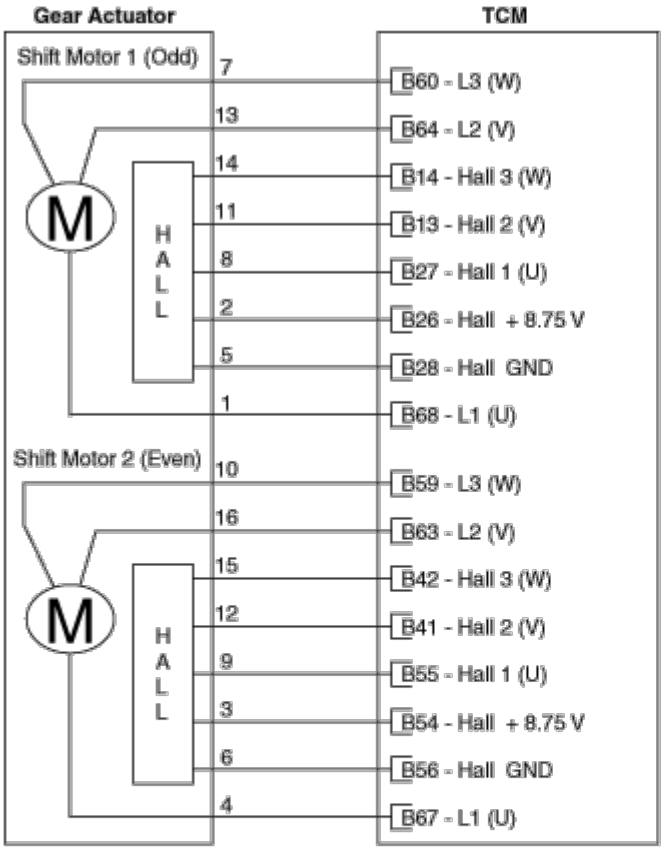

[Connection Information]

Terminal	Connected to	Function
1	TCM(B68)	Phase "U" (Shift 1)
2	TCM(B26)	Hall supply (Shift 1)
3	TCM(B54)	Hall supply (Shift 2)
4	TCM(B67)	Phase "U" (Shift 2)
5	TCM(B28)	Hall GND (Shift 1)
6	TCM(B56)	Hall GND (Shift 2)
7	TCM(B60)	Phase "W" (Shift 1)
8	TCM(B27)	Hall 1 (Shift 1)
9	TCM(B55)	Hall 1 (Shift 2)
10	TCM(B59)	Phase "W" (Shift 2)
11	TCM(B13)	Hall 2 (Shift 1)
12	TCM(B41)	Hall 2 (Shift 2)
13	TCM(B64)	Phase "V" (Shift 1)
14	TCM(B14)	Hall 3 (Shift 1)
15	TCM(B42)	Hall 3 (Shift 2)
16	TCM(B63)	Phase "V" (Shift 2)

[Harness Connector]

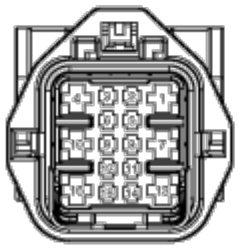

Shift Actuator Connector

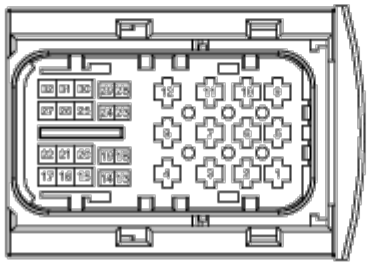

Connector [A]
TCM

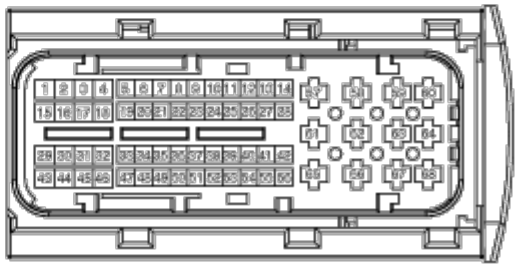

Connector [B]
TCM

Removal

WARNING

- Be sure to read and follow the "General Safety Information and Caution" before doing any work related with the high voltage system. Failure to follow the safety instructions may result in serious electrical injuries.

CAUTION

- Be sure to shift gear to Neutral by “Actuation Test” procedure using the GDS before removing gear actuator assembly.

NOTICE

- Use fender covers to avoid damaging painted surfaces.
- To avoid damage, unplug the wiring connectors carefully while holding the connector portion.

1. Shut off the High Voltage circuit.
   (Refer to General Information - "High Voltage Shutoff Procedure")
2. Remove the engine room under cover.
   (Refer to Engine And Transaxle Assembly - "Engine Room Under Cover")
3. Loosen the drain plug, and drain the inverter coolant. Remove the reservoir cap to help drain the coolant faster.
   (Refer to Hybrid Motor System - "Coolant")
4. Remove the HPCU (Hybrid Power Control Unit).

(Refer to Hybrid Control System - "Hybrid Power Control Unit (HPCU)")

5. Remove the ECM (Engine Control Module) and TCM (Transmssion Control Module).
   (Refer to Engine Control/Fuel System - "Engine Control Module (ECM)")
   (Refer to Dual Clutch Control System - "DCT Control Module (TCM)")
6. Remove the HPCU (Hybrid Power Control Unit) tray.
   (Refer to Hybrid Control System - "Hybrid Power Control Unit (HPCU)")
7. Disconnect the gear actuator motor connector (A) and solenoid connector (B).

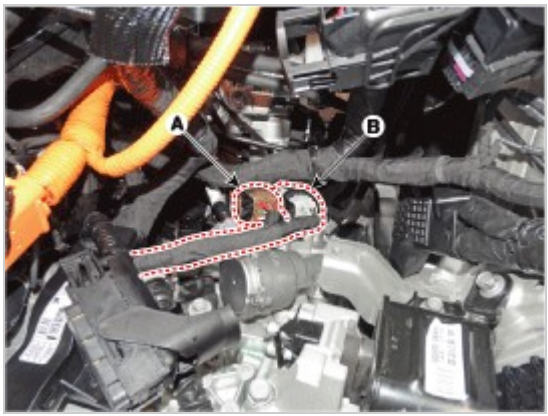

8. Remove the gear actuator assembly after loosening bolts (A-3ea, B-2ea).

Tightening torque :
(A) : 19.6 - 26.5 N.m (2.0 - 2.7 kgf.m, 14.5 - 19.5 lb-ft)
(B) : 9.8 - 11.8 N.m (1.0 - 1.2 kgf.m, 7.2 - 8.7 lb-ft)

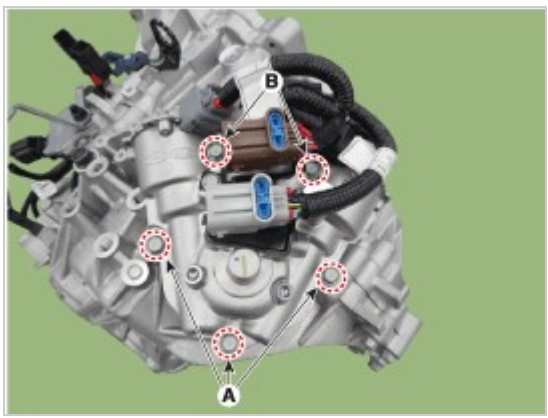

Installation

1. Install in the reverse order of removal.

NOTICE

- Check the details below before installing the gear actuator assembly.

1) Check that the gear actuator is placed in the "neutral" state.
2) Check the assembled state of the O-rings (A).

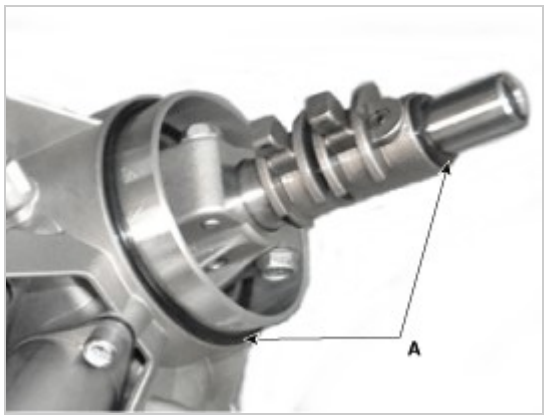

3) Apply gear oil to the surface of O- rings.
4) Check the assembled state of the dowel pins (A).

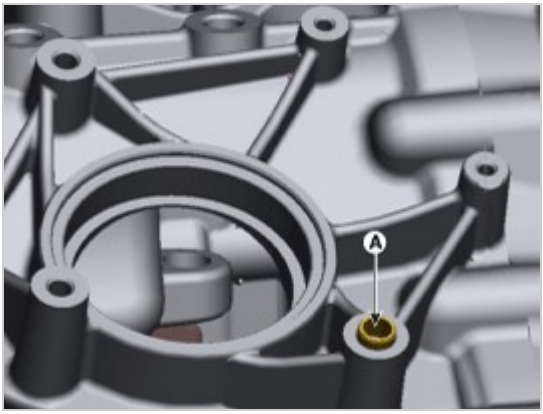

- Perform the gear actuator learning procedure using the GDS after replacing the gear actuator assembly.

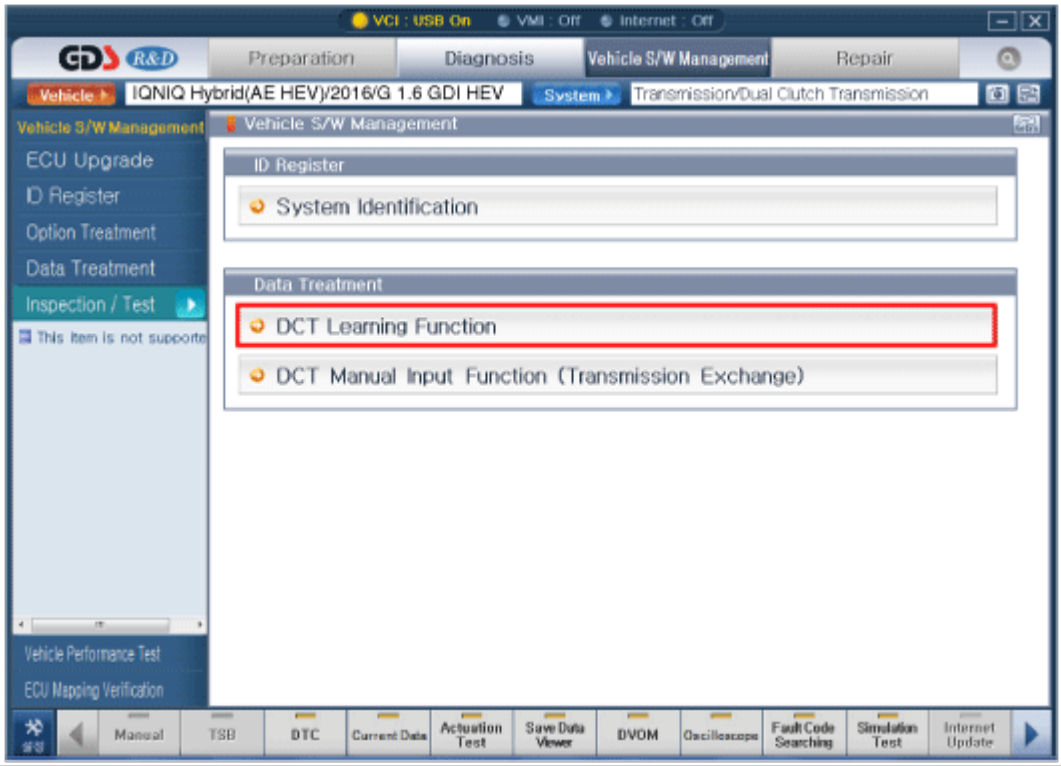

DCT (Dual Clutch Transmission) System

Components

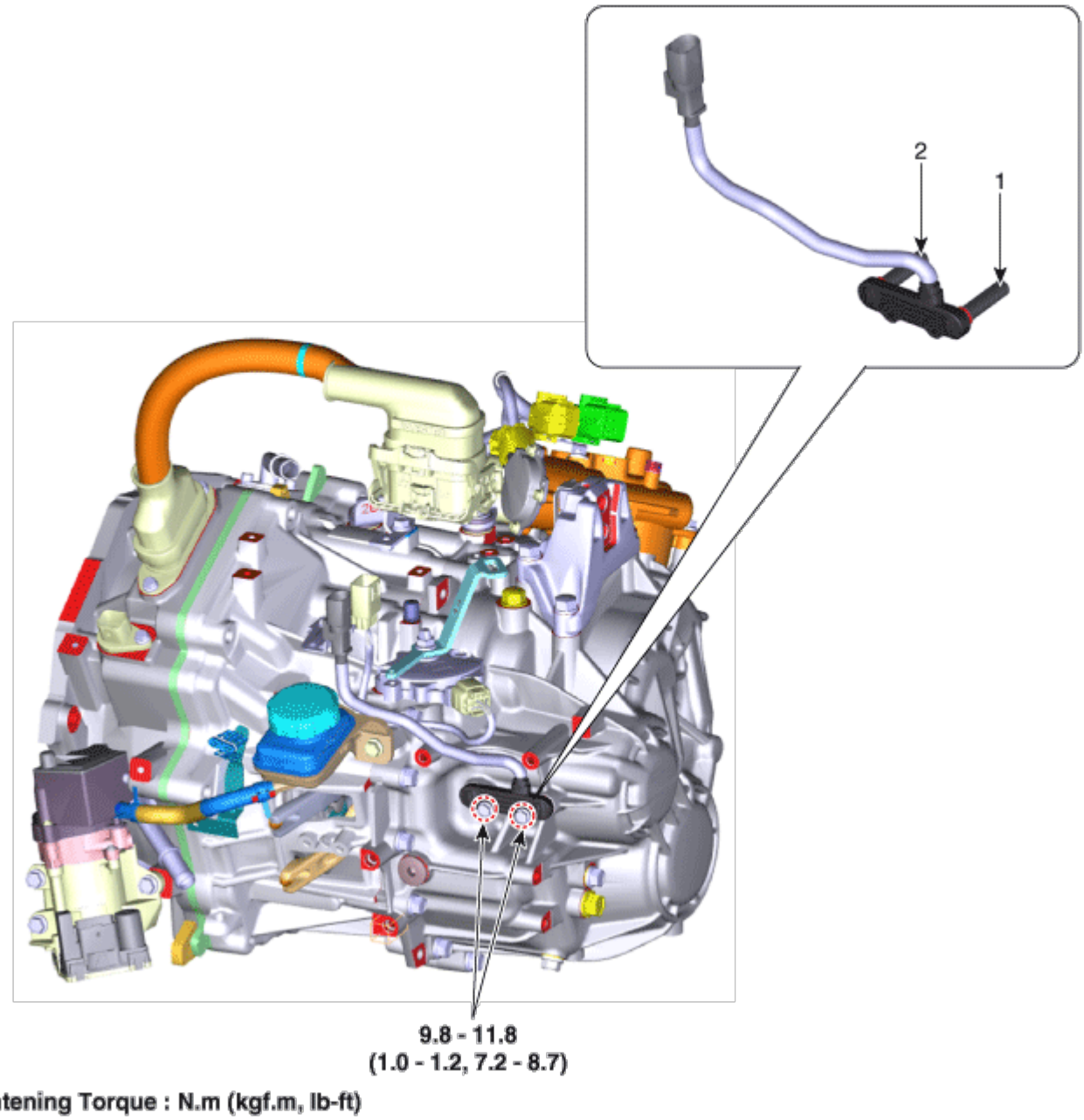

1. Input shaft speed sensor (Odd)
2. Input shaft speed sensor (Even)

DCT (Dual Clutch Transmission) System

Specification

Item	Specification
Type	Hall effect sensor
Operation condition (°C)°F	(-40 to 150) -40 to 302
Output signal (mA)	High: 11.8 - 16.8
	Low: 5.9 - 8.4

DCT (Dual Clutch Transmission) System

Description

- **Components location :**DCT (Dual Clutch Transmission)

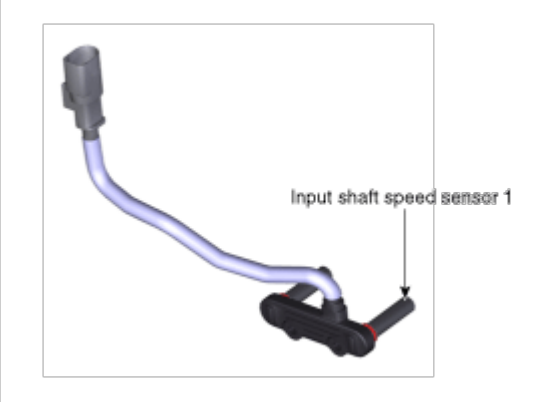

- **Function**

  The input shaft speed sensor is important in that it detects the input shaft RPM and sends this information to the Transmission Control Module (TCM).

  It provides important input information for electric control.

  The information is needed in all operations, including feedback control, gear shift control and failure detection of other sensors.

Circuit Diagram

[Circuit Diagram]

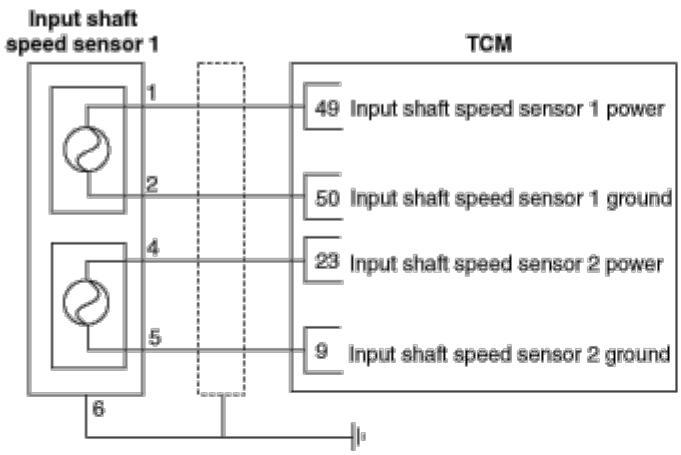

[Connection Information]

Terminal	Connected to	Function
1	TCM(49)	Input shaft speed sensor 1 power
2	TCM(50)	nput shaft speed sensor 1 ground
3	-	-
4	TCM(23)	Input shaft speed sensor 2 power
5	TCM(9)	Input shaft speed sensor 2 ground
6	Sensor ground	Sensor Shield

[Harness Connector]

Input shaft speed sensor connector

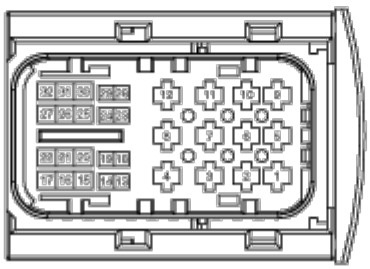

Connector [A] TCM

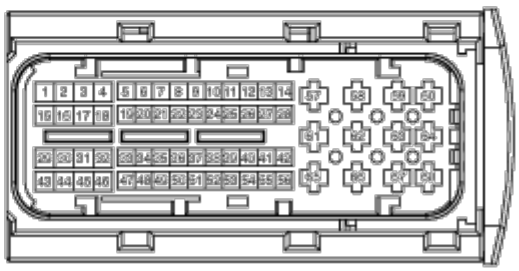

Connector [B] TCM

Removal

WARNING

- Be sure to read and follow the "General Safety Information and Caution" before doing any work related with the high voltage system. Failure to follow the safety instructions may result in serious electrical injuries.

NOTICE

- Use fender covers to avoid damaging painted surfaces.
- To avoid damage, unplug the wiring connectors carefully while holding the connector portion.

1. Shut off the High Voltage circuit.
   (Refer to General Information - "High Voltage Shutoff Procedure")

2. Remove the engine room under cover.
   (Refer to Engine And Transaxle Assembly - "Engine Room Under Cover")
3. Loosen the drain plug, and drain the inverter coolant. Remove the reservoir cap to help drain the coolant faster.
   (Refer to Hybrid Motor System - "Coolant")
4. Remove the HPCU (Hybrid Power Control Unit).
   (Refer to Hybrid Control System - "Hybrid Power Control Unit (HPCU)")
5. Remove the ECM (Engine Control Module) and TCM (Transmssion Control Module).
   (Refer to Engine Control/Fuel System - "Engine Control Module (ECM)")
   (Refer to Dual Clutch Control System - "DCT Control Module (TCM)")
6. Remove the HPCU (Hybrid Power Control Unit) tray.
   (Refer to Hybrid Control System - "Hybrid Power Control Unit (HPCU)")
7. Disconnect the input shaft speed sensor connector (A).

8. Remove the clutch actuator assembly.
   (Refer to Dual Clutch Transmission Control System - "Clutch Actuator")
9. Remove the input shaft speed sensor (A).

Tightening torque :
9.8 - 11.8 N.m (1.0 - 1.2kgf.m, 7.2 - 8.7 lb-ft)

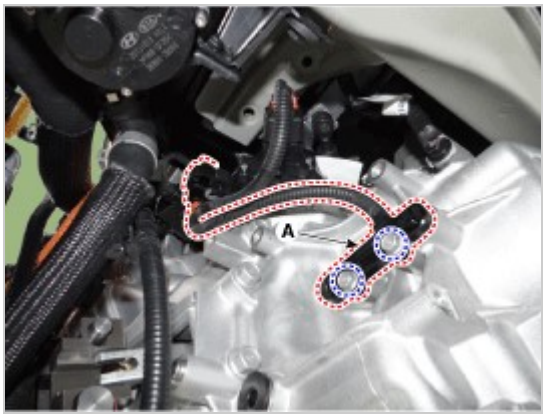

Installation

1. Install in the reverse order of removal.

NOTICE

- Before installing the input speed sensor,check the assembled state of the O-rings (A) and should apply gear oil to the surface of O- rings.

Components

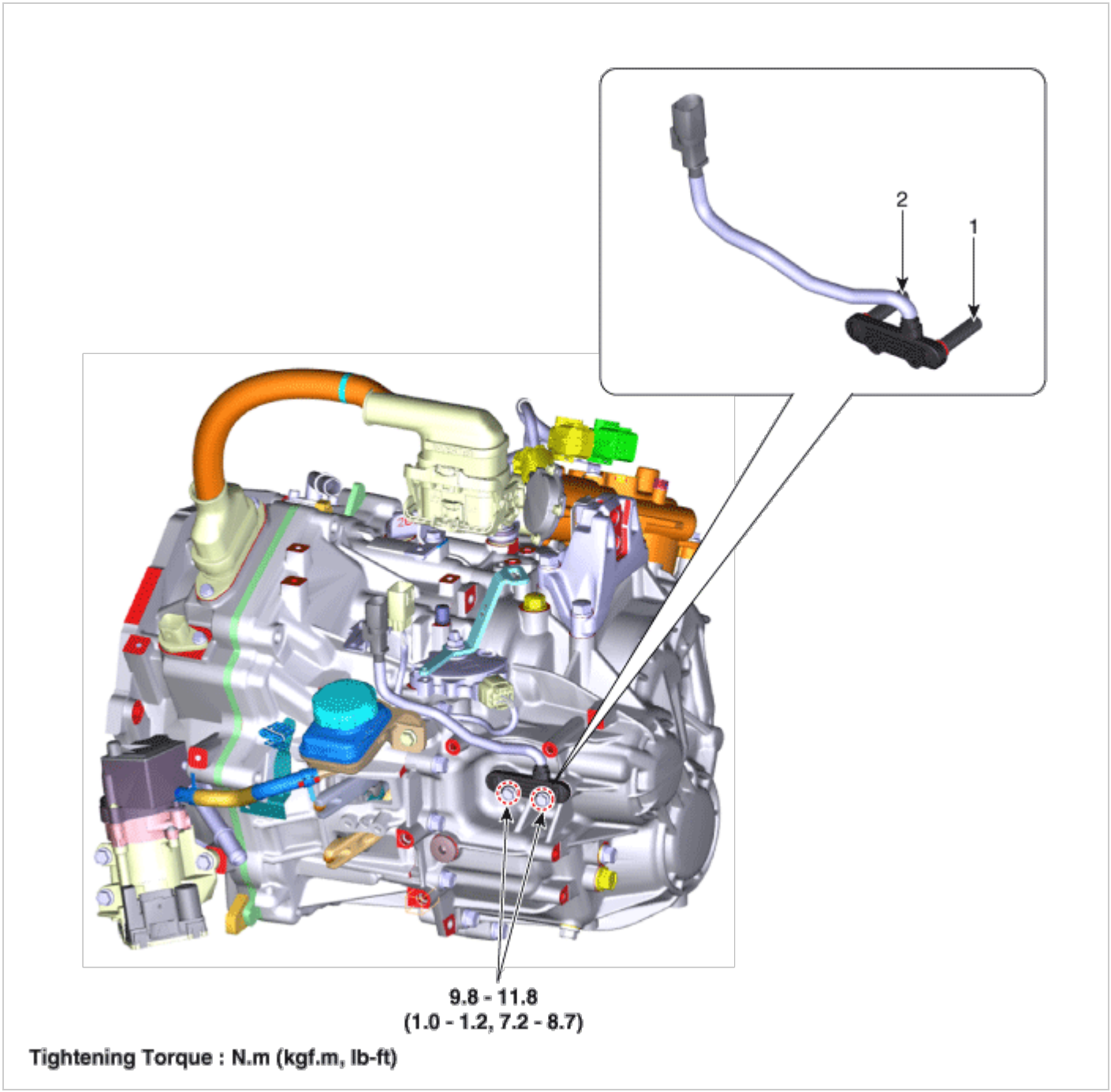

1. Input shaft speed sensor (Odd)
2. Input shaft speed sensor (Even)

Specification

Item	Specification
Type	Hall effect sensor
Operation condition (°C)°F	(-40 to 150) -40 to 302
Output signal (mA)	High: 11.8 - 16.8
	Low: 5.9 - 8.4

Description

- **Components location :**DCT (Dual Clutch Transmission)

- **Function**

  The input shaft speed sensor is important in that it detects the input shaft RPM and sends this information to the Transmission Control Module (TCM).

  It provides important input information for electric control.

  The information is needed in all operations, including feedback control, gear shift control and failure detection of other sensors.

DCT (Dual Clutch Transmission) System

Circuit Diagram

[Circuit Diagram]

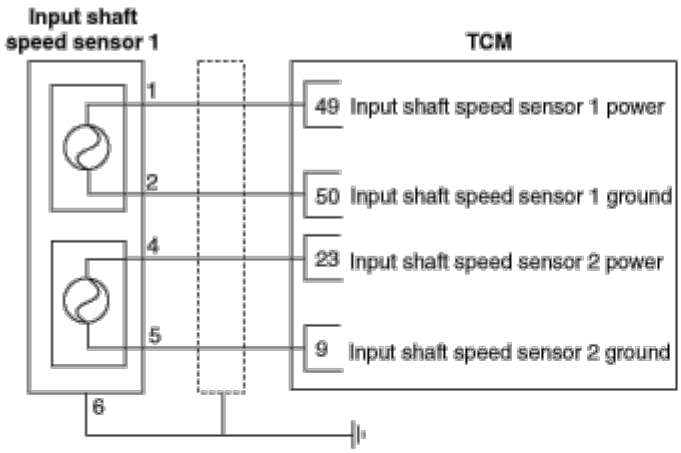

[Connection Information]

Terminal	Connected to	Function
1	TCM(49)	Input shaft speed sensor 1 power
2	TCM(50)	nput shaft speed sensor 1 ground
3	-	-
4	TCM(23)	Input shaft speed sensor 2 power
5	TCM(9)	Input shaft speed sensor 2 ground
6	Sensor ground	Sensor Shield

[Harness Connector]

Input shaft speed sensor connector

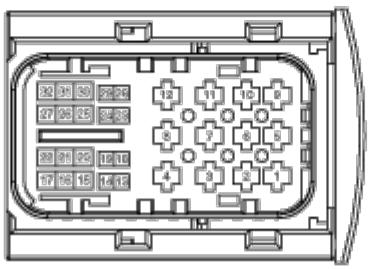

Connector [A]
TCM

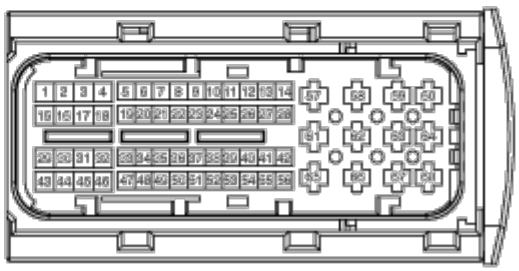

Connector [B]
TCM

DCT (Dual Clutch Transmission) System

Removal

WARNING

- Be sure to read and follow the "General Safety Information and Caution" before doing any work related with the high voltage system. Failure to follow the safety instructions may result in serious electrical injuries.

NOTICE

- Use fender covers to avoid damaging painted surfaces.
- To avoid damage, unplug the wiring connectors carefully while holding the connector portion.

1. Shut off the High Voltage circuit.
   (Refer to General Information - "High Voltage Shutoff Procedure")

2. Remove the engine room under cover.
   (Refer to Engine And Transaxle Assembly - "Engine Room Under Cover")
3. Loosen the drain plug, and drain the inverter coolant. Remove the reservoir cap to help drain the coolant faster.
   (Refer to Hybrid Motor System - "Coolant")
4. Remove the HPCU (Hybrid Power Control Unit).
   (Refer to Hybrid Control System - "Hybrid Power Control Unit (HPCU)")
5. Remove the ECM (Engine Control Module) and TCM (Transmssion Control Module).
   (Refer to Engine Control/Fuel System - "Engine Control Module (ECM)")
   (Refer to Dual Clutch Control System - "DCT Control Module (TCM)")
6. Remove the HPCU (Hybrid Power Control Unit) tray.
   (Refer to Hybrid Control System - "Hybrid Power Control Unit (HPCU)")
7. Disconnect the input shaft speed sensor connector (A).

8. Remove the clutch actuator assembly.
   (Refer to Dual Clutch Transmission Control System - "Clutch Actuator")
9. Remove the input shaft speed sensor (A).

Tightening torque :
9.8 - 11.8 N.m (1.0 - 1.2kgf.m, 7.2 - 8.7 lb-ft)

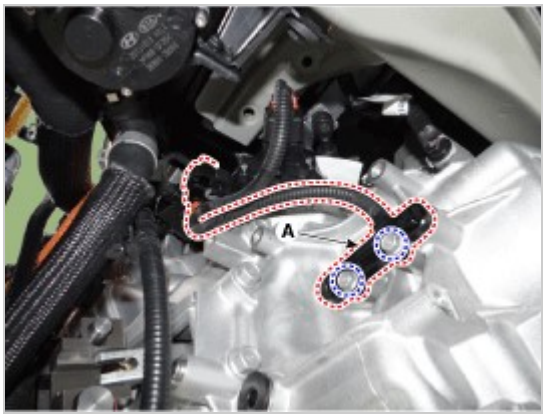

Installation

1. Install in the reverse order of removal.

NOTICE

- Before installing the input speed sensor,check the assembled state of the O-rings (A) and should apply gear oil to the surface of O- rings.

Components

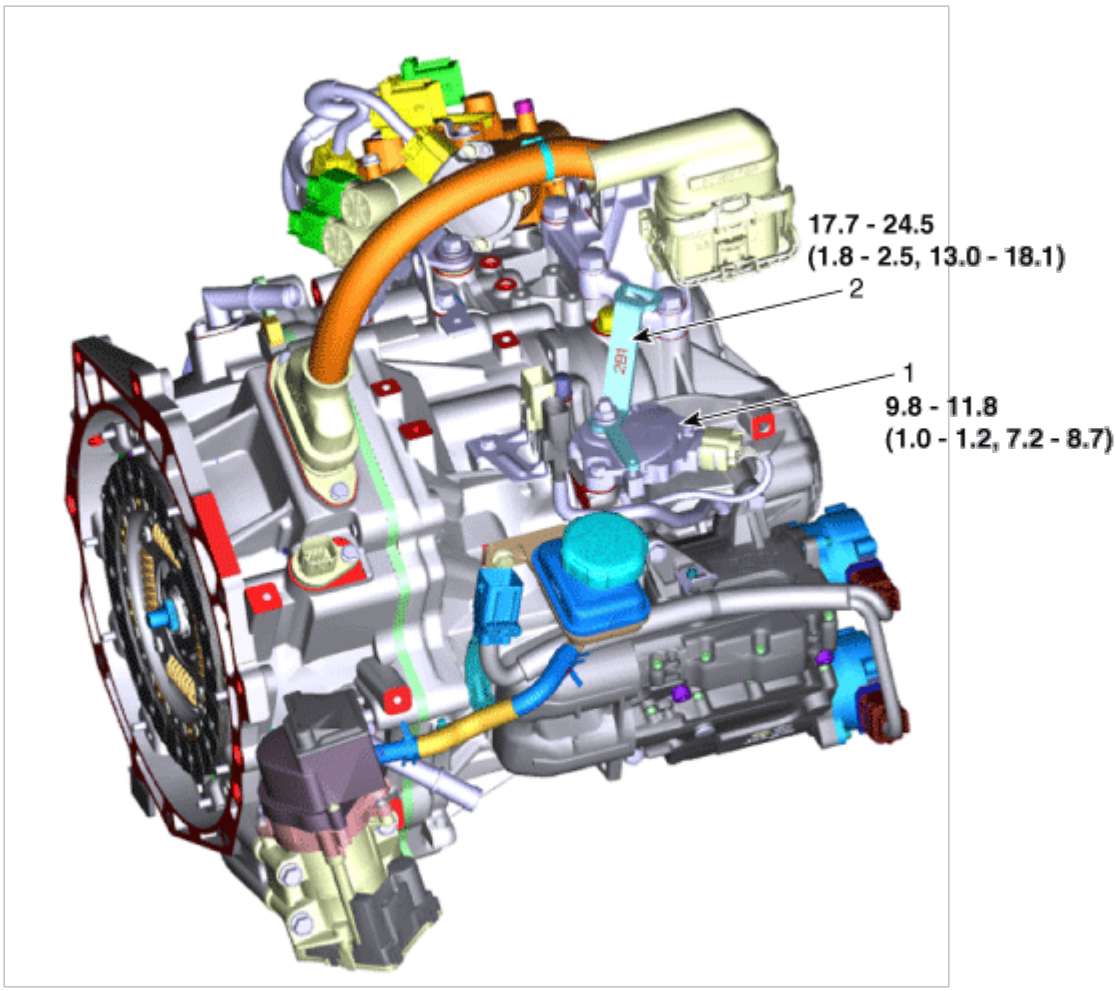

Tightening Torque : N.m (kgf.m, lb-ft)

1. Inhibitor switch
2. Manual control lever

Description

- **Components location :**DCT (Dual Clutch Transmission)

• **Function**

- The inhibitor switch mounted on the upper of transaxle and connected with shifter lever.
- The inhibitor switch has four points of contact and it makes the signals(S1, S2, S3, S4).
- The inhibitor switch signals delivered at the TCM according to control of the shift lever positions(P, R, N, D) and it is used to control of the gear setting.

Specifications

▷ Type: Combination of output signals from 4 terminals

▷ Specifications

Item	Specifications
Output type	Combination of output signals
Power supply (V)	12

Signal Code Table

	P	P-R	R	R-N	N	N-D	D
S1	12V	12V	0	0	0	0	0
S2	0	12V	12V	12V	0	0	0
S3	0	0	0	12V	12V	12V	0
S4	0	0	0	0	0	12V	12V

Circuit Diagram

[Circuit Diagram]

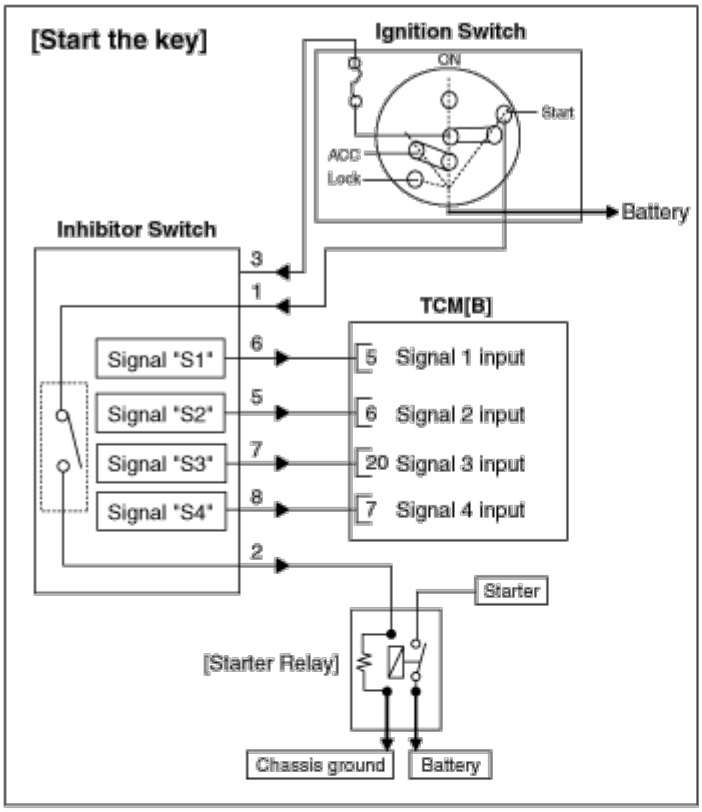

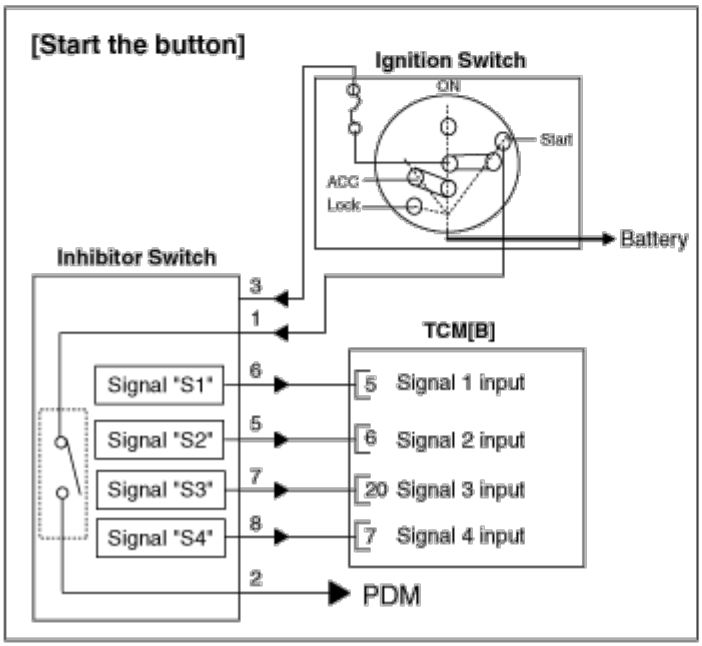

[Connection Information]

Terminal	Connected to	Function
1	VS	Start power (12V) input
2	Starter relay	Start signal output
	PDM(Button only)	Start signal input
3	VG1	Ignition ON iput
5	TCM_B (6)	Signal 2 output
6	TCM_B (5)	Signal 1 output
7	TCM_B (20)	Signal 3 output
8	TCM_B (7)	Signal 4 output

[Harness Connector]

Inhibitor switch connector

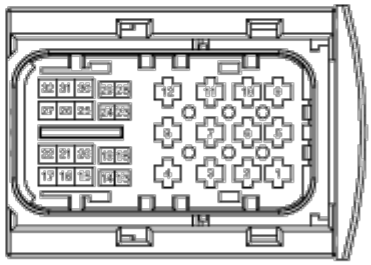

Connector [A]
TCM

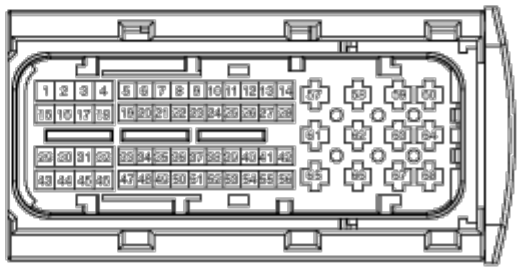

Connector [B]
TCM

Fault Diagnosis

Fault Diagnosis for Symptom

Major Symptom	Expected Cause	Items to Check and Measures
Shift lever not operating Gear not marked on cluster	Inhibitor switch circuit abnormal Inhibitor switch function abnormal	Check the inspection FLOW and replace the inhibitor switch
Shock occurs while shifting lever Warning lamp ON Engine OFF while vehicle is parked	Inhibitor switch "N" setting faulty	Adjust "N" setting using "N" setting jig (refer to automatic transmission system - "inhibitor switch")
	Shift cable separation faulty	Adjust shift cable separation (refer to automatic transmission system - "inhibitor switch")
	Poor ground condition on reversing light circuit	Check the ground condition on reversing light and retighten it
	Inhibitor switch vehicle side circuit abnormal	Check the connection of junction box power terminal, fuse (TCU2) terminal and replace the junction box or adjust the gap
		Check inside the inhibitor switch connector for foreign substance and whether terminal is bent

	Poor ground condition on inhibitor switch wire	Check the ground condition of wire and retighten it
	Poor inhibitor unit (disconnection/short-circuit)	Replace inhibitor switch (refer to inhibitor switch inspection)

Inspection

NOTICE

- Thoroughly check connectors for looseness, poor connection, bending, corrosion, contamination, deterioration, or damage.

Inspection flow

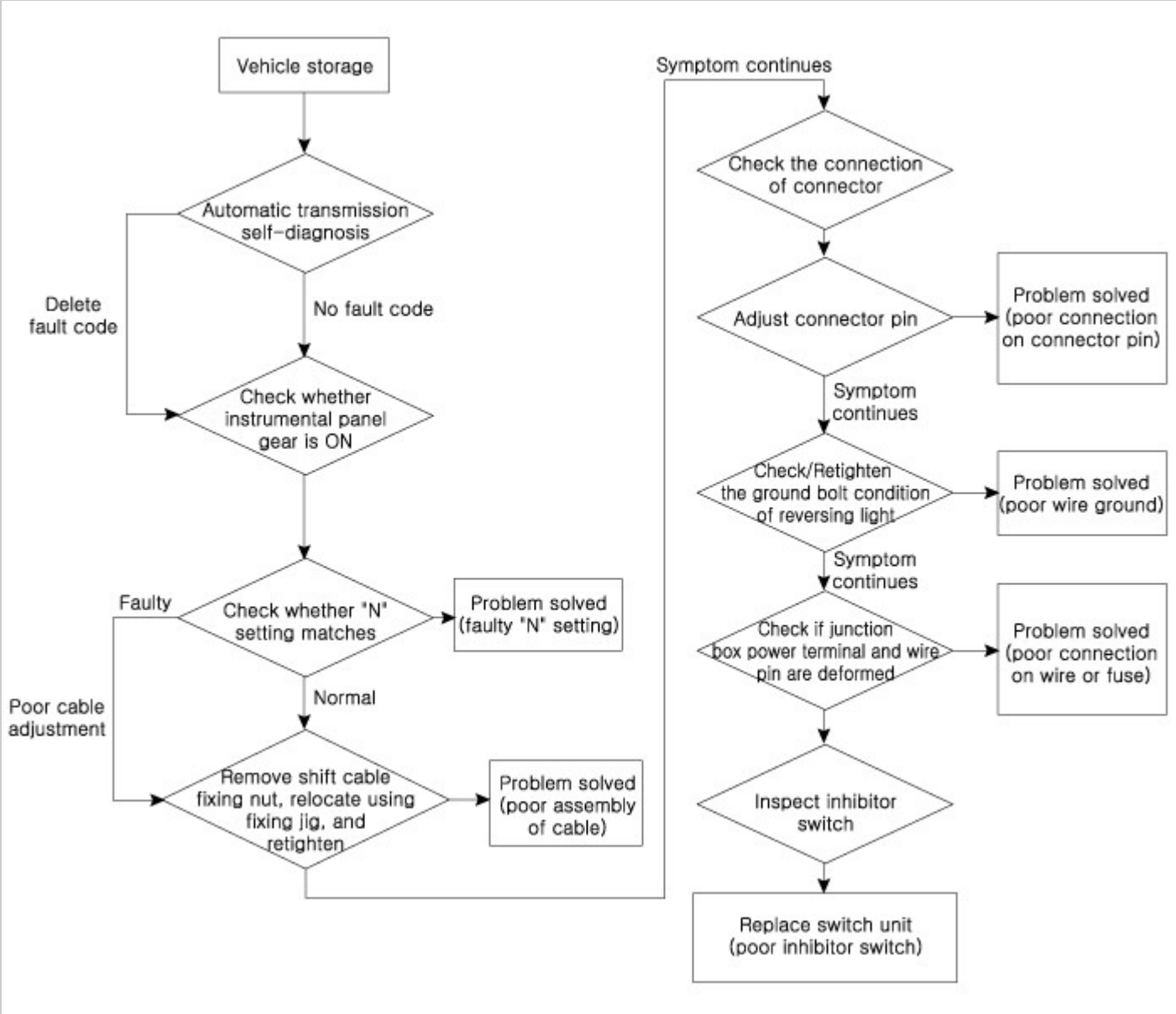

Items to check

1. Inspect DTC code.
2. Inspect whether N setting matches.
   – Adjust N setting (refer to automatic transmission system - "inhibitor switch")
3. Inspect shift cable separation.
   – Adjust shift cable separation (refer to automatic transmission system - "shift cable")
4. Inspect whether connector is connected.
   – Inspect connector thoroughly for looseness, poor connection, bending, corrosion, contamination, deformation, or damage.
   – Turn ignition key "ON" and engine "OFF" and measure the power supplied to inhibitor switch circuit and voltage between ground.
   Specification: approx. 12 V
   – Fix the pin wiring when connector pin wiring is faulty (refer to ETM - "wiring repair").

5. Inspect ground condition on reversing light circuit.
   – Check the ground location of reversing light (refer to ETM - "harness location map").
   – Reattach reversing light if ground condition is faulty.
6. Inspect wiring connection on junction box power terminal and fuse lamp.
   – Check whether fuse holder is separated and holder is holding the fuse tight.

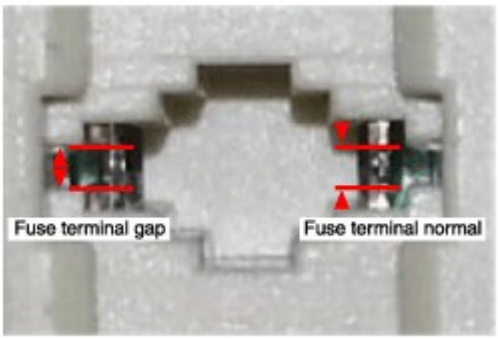

   – Attach tester fuse to check if it is connected appropriately.

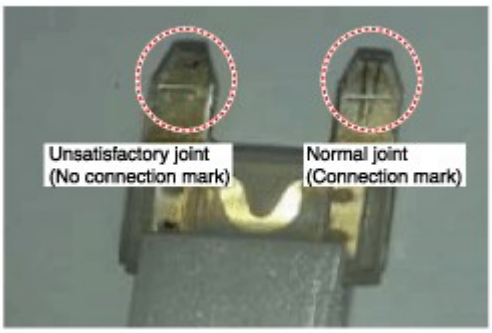

   – Check whether fuse capacity is appropriate for each circuit.
   – Check if fuse is damaged.
   – Check pulling of fuse fixing wiring, inflow of foreign substance, and arrangement condition of terminal.
   – Relocate the terminal that has been pulled and inspect using the method explained above.
   – When problem is not solved, refer to the circuit diagram wiring repair instructions to fix or replace the terminal.
7. Inspect inhibitor switch signal.
   – Turn ignition key "ON" and engine "OFF".
   – Measure the voltage between each terminal and chassis ground when shifting lever to "P, R, N, D" range.

   Specified value:refer to specification "signal code" table

Removal

WARNING

- Be sure to read and follow the "General Safety Information and Caution" before doing any work related with the high voltage system. Failure to follow the safety instructions may result in serious electrical injuries.

NOTICE

- Use fender covers to avoid damaging painted surfaces.
- To avoid damage, unplug the wiring connectors carefully while holding the connector portion.

1. Shut off the High Voltage circuit.
   (Refer to General Information - "High Voltage Shutoff Procedure")
2. Remove the engine room under cover.
   (Refer to Engine And Transaxle Assembly - "Engine Room Under Cover")
3. Loosen the drain plug, and drain the inverter coolant. Remove the reservoir cap to help drain the coolant faster.
   (Refer to Hybrid Motor System - "Coolant")
4. Remove the HPCU (Hybrid Power Control Unit).
   (Refer to Hybrid Control System - "Hybrid Power Control Unit (HPCU)")
5. Remove the ECM (Engine Control Module) and TCM (Transmssion Control Module).

(Refer to Engine Control/Fuel System - "Engine Control Module (ECM)")
(Refer to Dual Clutch Control System - "DCT Control Module (TCM)")

6. Remove the HPCU (Hybrid Power Control Unit) tray.
   (Refer to Hybrid Control System - "Hybrid Power Control Unit (HPCU)")
7. Make sure vehicle does not roll before setting shift lever to "N" position.
8. Disconnect the inhibitor switch extension connector (A).
9. Remove the shift cable mounting nut (B).

10. Remove the manual control lever (A) and the washer after removing a nut (B).

11. Remove the inhibitor assembly (A) after removing the bolts (B-2ea).

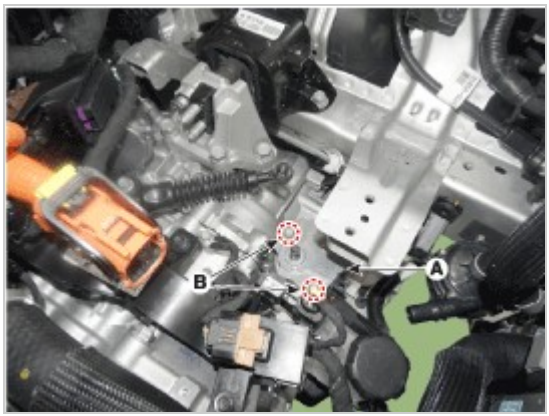

12. Remove the extension connector (A) from the inhibitor switch

Installation

1. Check that the shift lever is placed in the "N" position.
2. Lightly tighten the inhibitor switch mounting bolts (B) after installing the inhibitor switch (A).

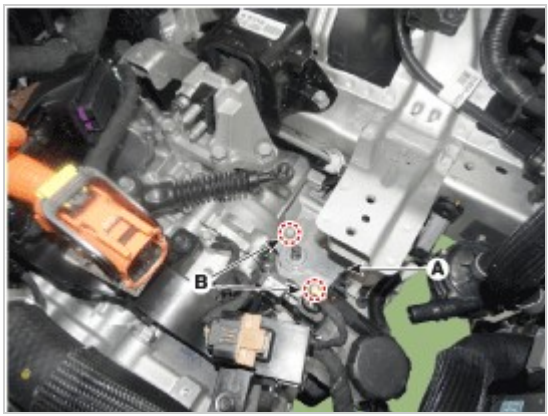

3. Lightly tighten the manual control lever mounting nut (B) after installing the manual control lever (A).

4. Align the hole (A) in the manual control lever with the "N" position hole (B) of the inhibitor switch and then insert the inhibitor switch guide pin (SST No.:09480-A3800).

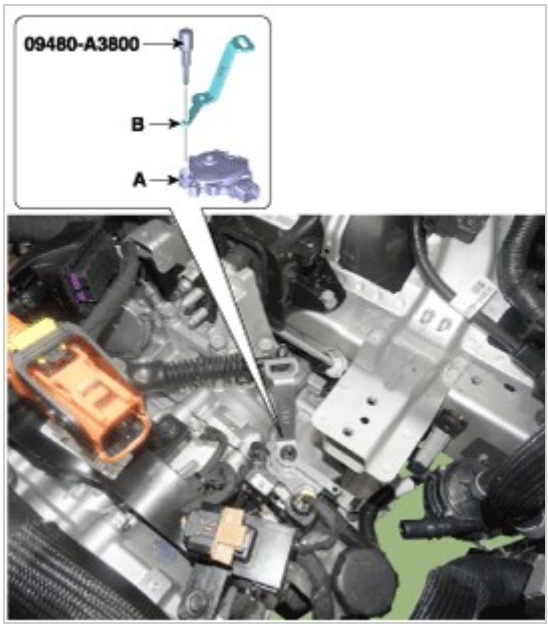

5. Tighten the manual lever mounting nut (A) to the specified torque.

Tightening torque :
17.7 - 24.5 N.m (1.8 - 2.5 kgf.m, 13.0 - 18.1 lb-ft)

6. Tighten the inhibitor switch mounting bolts (B) to the specified torque.

Tightening torque :
9.8 - 11.8 N.m (1.0 - 1.2 kgf.m, 7.2 - 8.7 lb-ft)

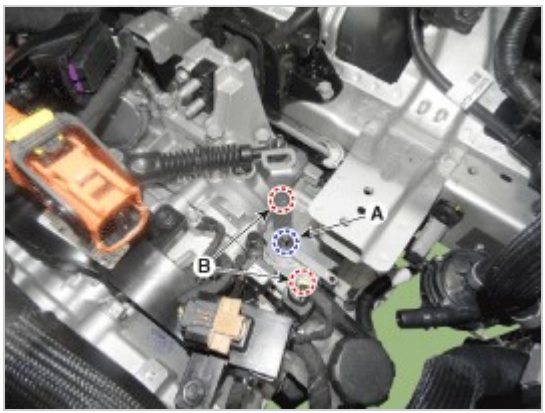

7. Lightly tighten the nut (B) after connected the shift cable (C) in the manual control lever (D).
8. Tighten the nut (B) after Push shift cable (C) lightly to "F" direction shown to eliminate free play of shift cable.

Tightening torque :
9.8 - 13.7 N.m (1.0 - 1.4 kgf.m, 7.2 - 10.1 lb-ft)

9. Connect the inhibitor switch connector (A).

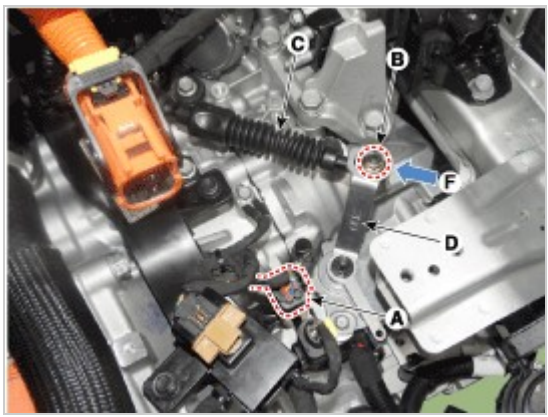

10. Remove the inhibitor switch guide pin (SST No. : 09480-A3800) from the hole.
11. Install the engine room under cover.
    (Refer to Engine Mechanical System - "Engine Room Under Cover")
12. Install the HPCU (Hybrid Power Control Unit) tray.
    (Hybrid Control System - "HPCU")
13. Install the ECM (Engine Controm Module) and TCM (Transmission Control Module)
    (Refer to Engine Control/Fuel System - "ECM")
    (Refer to Dual Clutch Control System - "TCM")
14. Install the HPCU (Hybrid Power Control Unit).
    (Hybrid Control System - "HPCU")
15. Bleed air from the hybrid motor cooling system using the GDS.
    (Refer to Hybrid Motor System- "Coolant")

⚠ CAUTION

- Check that operating surely at each range of the inhibitor switch corresponding to each position of shift lever.

DCT (Dual Clutch Transmission) System

Components

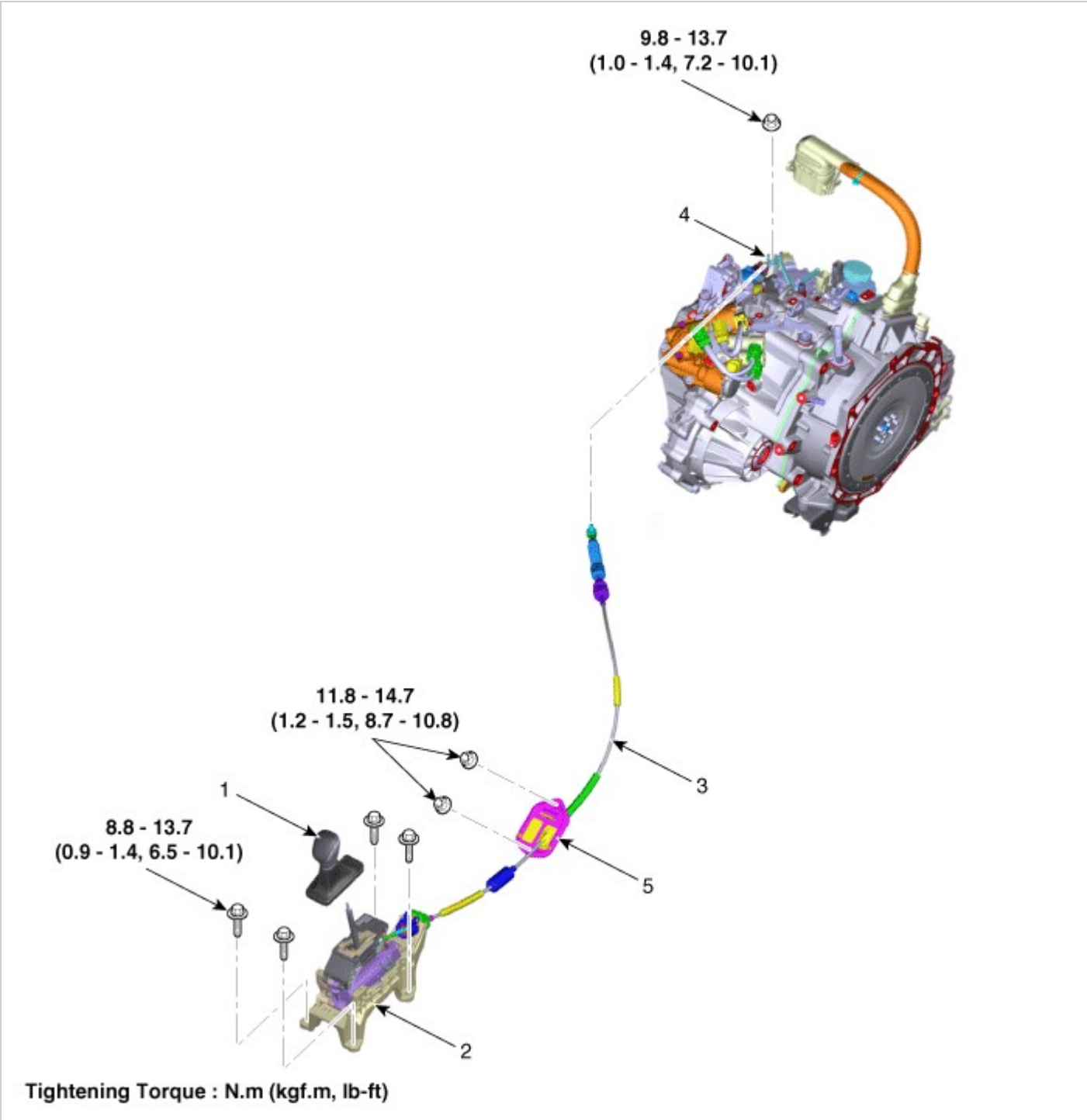

1. Shift lever knob & boots assembly
2. Shift lever assembly
3. Shift cable
4. Manual control lever
5. Shift cable retainer

DCT (Dual Clutch Transmission) System

Removal

1. Remove the shift lever knob & boots (A) pull both of it up.

2. Remove the floor console assembly.
   (Refer to Body - "Floor Console")
3. Disconnect the connector (A).

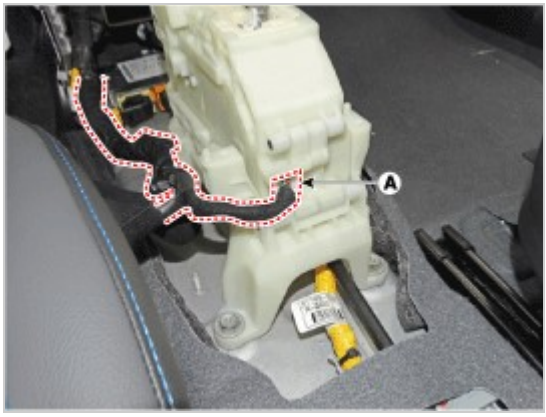

4. Disconnect the shift cable.
   (1) Disconnect the eye-end (B) after removing the snap pin (A).
   (2) Release the lock and then remove the cable socket (C).

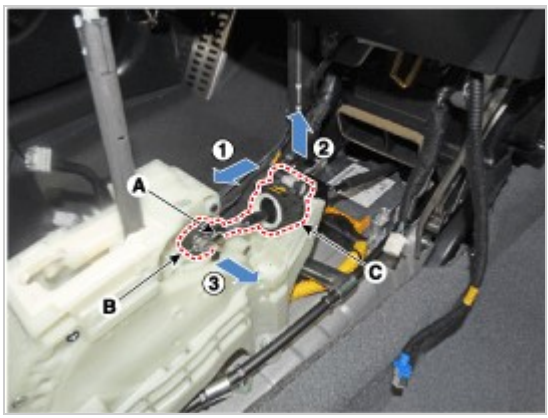

5. Remove the shift lever assembly (A) after removing the bolts.

Tightening torque :
8.8 - 13.7 N.m (0.9 - 1.4 kgf.m, 6.5 - 10.1 lb-ft)

Installation

1. Install in the reverse order of removal.

NOTICE

- Before installing, check that the shift lever and manual control lever are placed in the "N" position.

⚠ CAUTION

- When assembling shift cable, the projection (A) must face upwards.

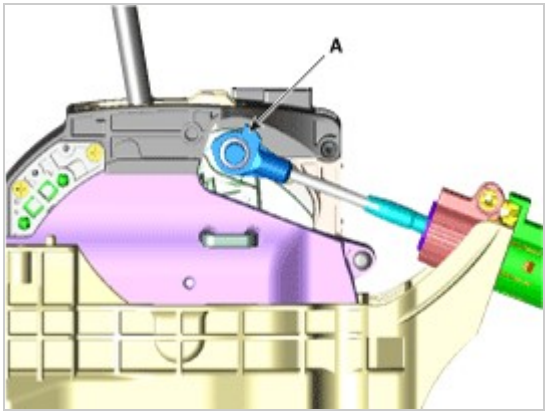

- When assembling the snap pin, be careful about the correct direction.
  - The band portion (A) must point to the front of the vehicle.
  - The band portion (A) must point outwards.

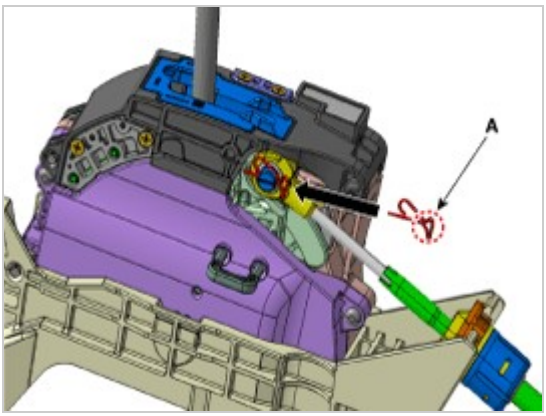

- After installing the shift cable socket, check portion (A) to see if it projects outwards from the cap.

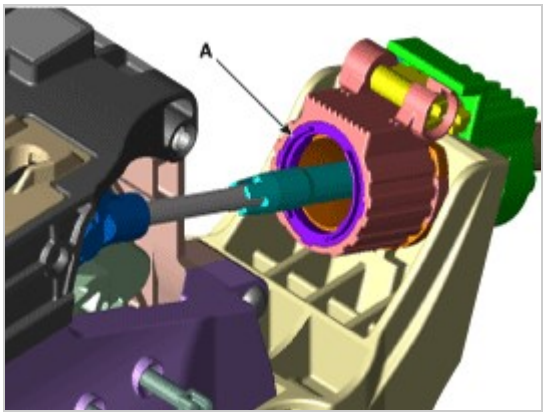

Components

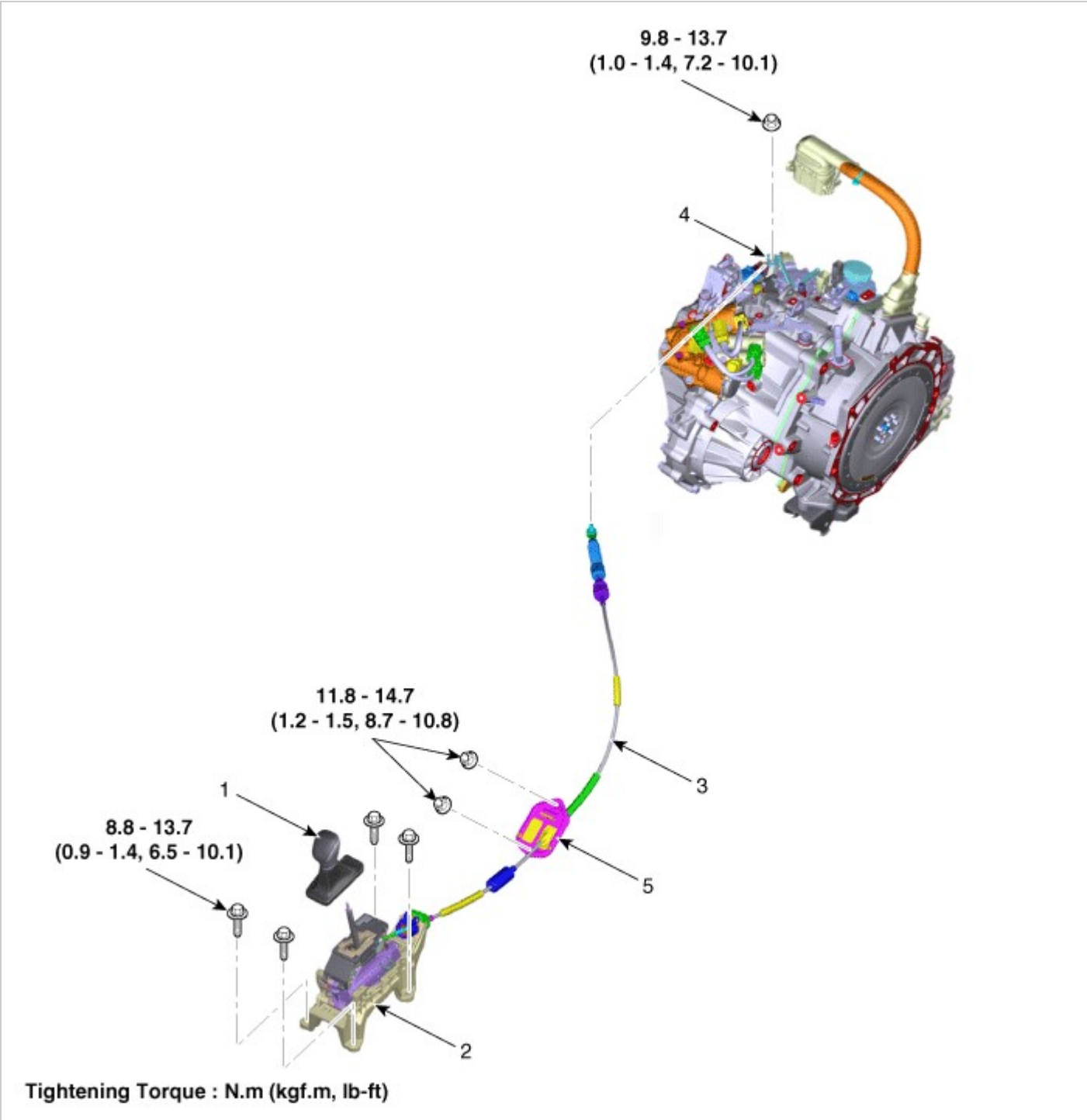

1. Shift lever knob & boots assembly
2. Shift lever assembly
3. Shift cable
4. Manual control lever
5. Shift cable retainer

DCT (Dual Clutch Transmission) System

Removal

WARNING

- Be sure to read and follow the "General Safety Information and Caution" before doing any work related with the high voltage system. Failure to follow the safety instructions may result in serious electrical injuries.

NOTICE

- Use fender covers to avoid damaging painted surfaces.
- To avoid damage, unplug the wiring connectors carefully while holding the connector portion.

1. Shut off the High Voltage circuit.
   (Refer to General Information - "High Voltage Shutoff Procedure")
2. Remove the engine room under cover.
   (Refer to Engine And Transaxle Assembly - "Engine Room Under Cover")

3. Loosen the drain plug, and drain the inverter coolant. Remove the reservoir cap to help drain the coolant faster.
   (Refer to Hybrid Motor System - "Coolant")
4. Remove the HPCU (Hybrid Power Control Unit).
   (Refer to Hybrid Control System - "Hybrid Power Control Unit (HPCU)")
5. Remove the ECM (Engine Control Module) and TCM (Transmssion Control Module).
   (Refer to Engine Control/Fuel System - "Engine Control Module (ECM)")
   (Refer to Dual Clutch Control System - "DCT Control Module (TCM)")
6. Remove the HPCU (Hybrid Power Control Unit) tray.
   (Refer to Hybrid Control System - "Hybrid Power Control Unit (HPCU)")
7. Disconnect the gear actuator motor connector (A) and solenoid connector (B).

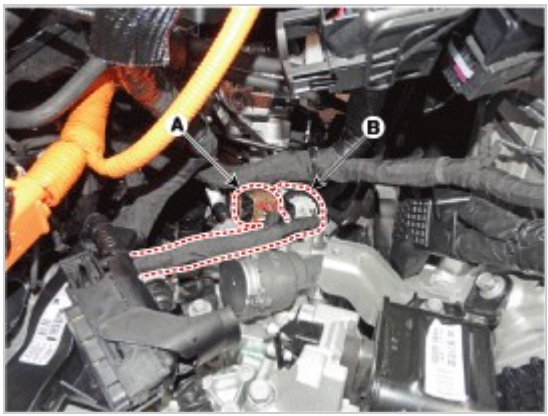

8. Disconnect the hybrid motor connector (A) and engine clutch actuator connector (B).
9. Disconnect the DCT clutch actuator connector (C).

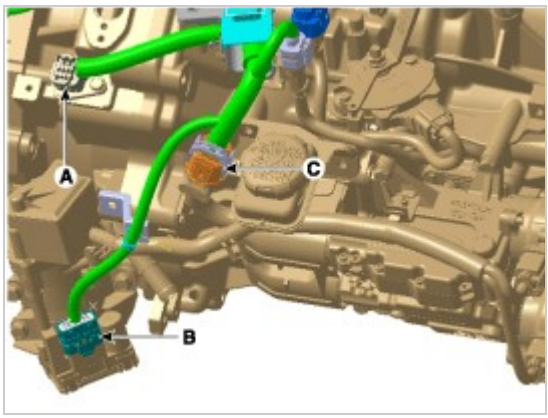

10. Disconnect the inhibitor switch connector (A) and input shaft speed sensor connector (B).
11. Remove the ground bolt (C) and wiring bracket bolt (D).

Tightening torque :
9.8 - 11.8 N.m (1.0 - 1.2kgf.m, 7.2 - 8.7 lb-ft)

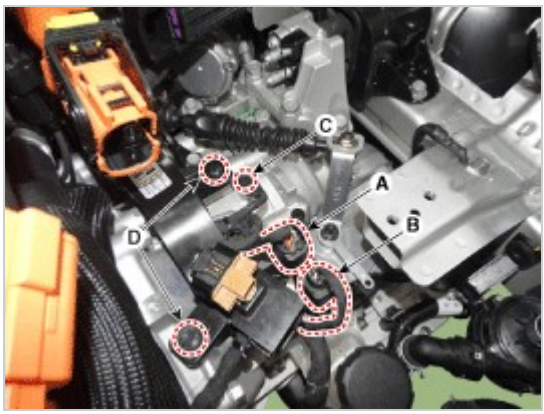

12. Remove the shift cable (C) from the cable bracket (B), after loosening the mounting nut (A).

13. Remove the shift lever knob & boots (A) pull both of it up.

14. Remove the floor console assembly.
    (Refer to Body - "Floor Console")
15. Disconnect the shift cable.
    (1) Disconnect the eye-end (B) after removing the snap pin (A).
    (2) Release the lock and then remove the cable socket (C).

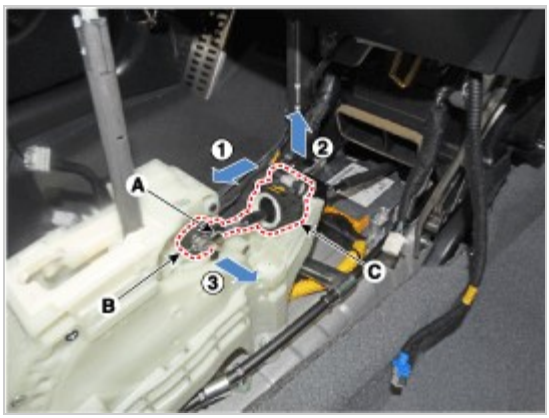

16. Remove the retainer (A) by loosening the nuts (B-2ea).

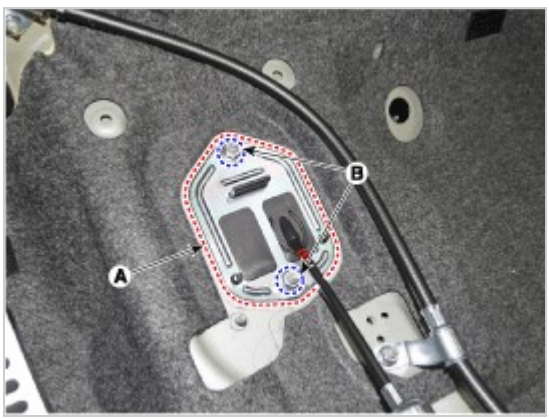

17. Remove the shift cable from the vehicle.

Installation

1. Install the retainer (A) and then tighten the nut (B-2ea).

Tightening torque :

11.8 - 14.7 N.m (1.2 - 1.5 kgf.m, 8.7 - 10.8 lb-ft)

NOTICE

- Install the cable after placing the shift lever and the manual control lever in the N position.

2. Install the shift cable (B) and then fix the snap pin (A).

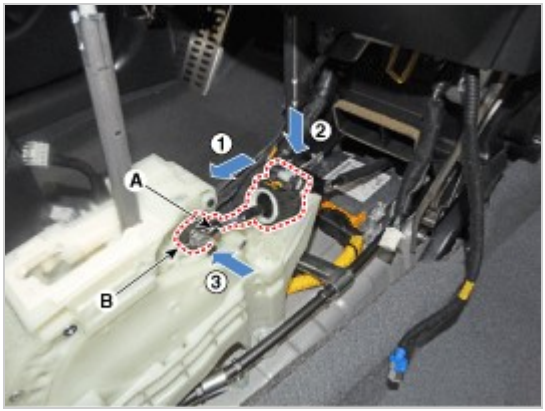

CAUTION

- When assembling shift cable, the projection (A) must face upwards.

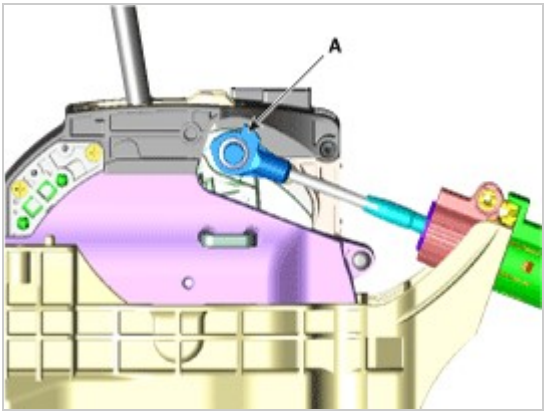

- When assembling the snap pin, be careful about the correct direction.
  - The band portion (A) must point to the front of the vehicle.
  - The band portion (A) must point outwards.

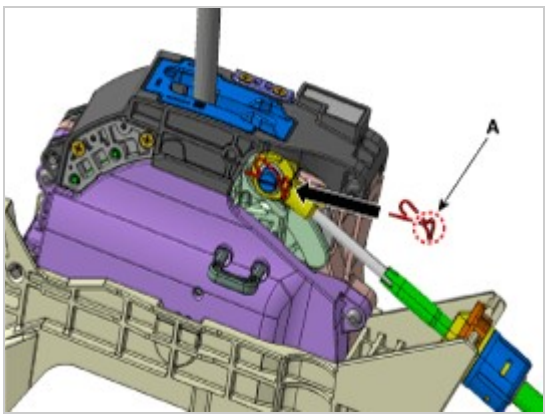

- After installing the shift cable socket, check portion (A) to see if it projects outwards from the cap.

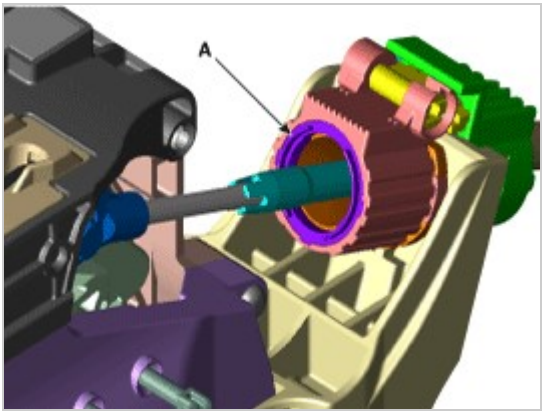

3. Install the shift cable (A) in the cable bracket (B).
4. Align the hole (C) in the manual control lever with the "N" position hole (D) of the inhibitor switch and then insert the inhibitor switch guide pin (SST No. : 09480-A3800).
5. Lightly tighten the nut (E) after connected the shift cable (B) in the manual control lever.
6. Tighten the nut (E) after Push shift cable (B) lightly to "F" direction shown to eliminate free play of shift cable.

Tightening torque :
9.8 - 13.7 N.m (1.0 - 1.4 kgf.m, 7.2 - 10.1 lb-ft)

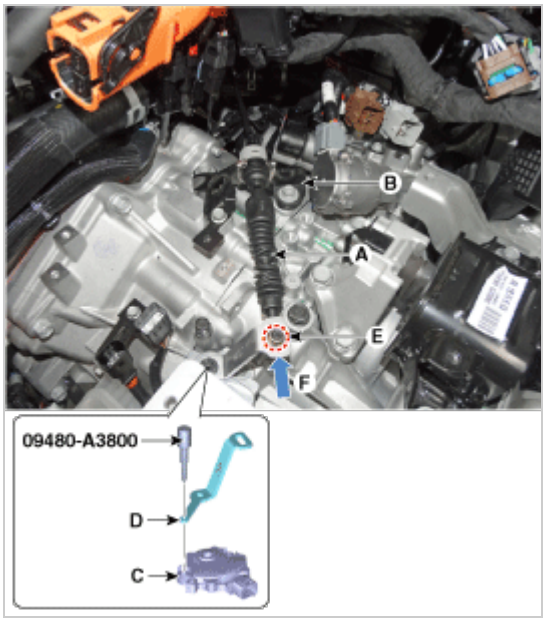

7. Remove the inhibitor switch guide pin (SST No. : 09480-A3800) from the hole.
8. Install the engine room under cover.
   (Refer to Engine Mechanical System - "Engine Room Under Cover")
9. Install the HPCU (Hybrid Power Control Unit) tray.
   (Hybrid Control System - "HPCU")
10. Install the ECM (Engine Controm Module) and TCM (Transmission Control Module)
    (Refer to Engine Control/Fuel System - "ECM")
    (Refer to Dual Clutch Control System - "TCM")
11. Install the HPCU (Hybrid Power Control Unit).
    (Hybrid Control System - "HPCU")
12. Bleed air from the hybrid motor cooling system using the GDS.
    (Refer to Hybrid Motor System- "Coolant")
13. Install the floor console assembly.
    (Refer to Body - "Floor Console")

⚠ CAUTION

- Check that operating surely at each range of the inhibitor switch corresponding to each position of shift lever.

DCT (Dual Clutch Transmission) System

Description

- **Components location :**DCT (Dual Clutch Transmission)

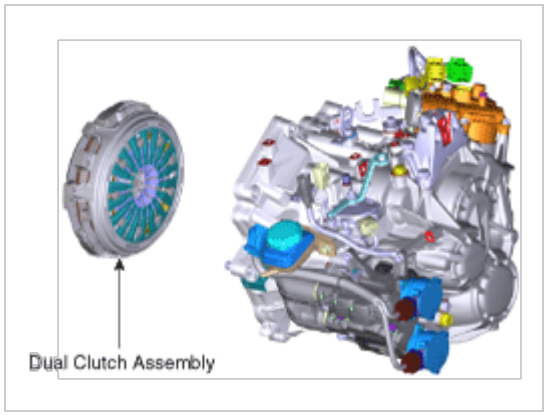

- **Function**

  The dual clutch is installed within the transmission.

  The dual clutch is comprised of an odd clutch and an even clutch. The odd clutch transfers and cuts off engine and motor power to the transmission when shifting odd gears. The even clutch transfers and cuts off engine and motor power to the transmission when shifting even gears.

DCT (Dual Clutch Transmission) System

Components

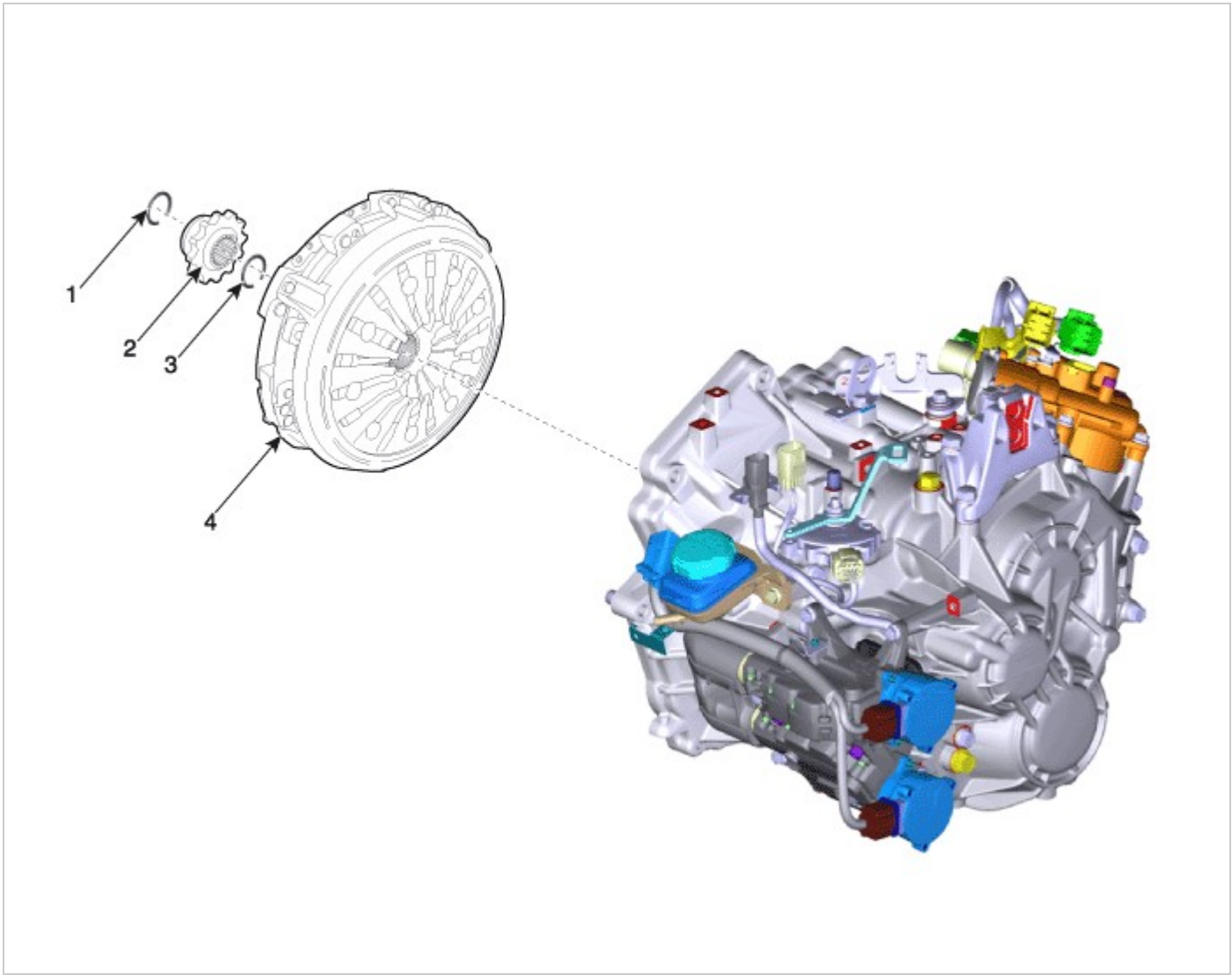

1. Retaining ring
2. Spline hub
3. Snap ring
4. Dual clutch assembly

DCT (Dual Clutch Transmission) System

Removal

1. Remove the dual clutch transmission from the vehicle.
   (Refer to Dual Clutch Transmission System - "Dual Clutch Transmission")
2. Remove the hybrid motor assembly from the dual clutch transmission assembly.

(Refer to Hybrid Motor System - "Hybrid Motor Assembly")

3. Remove the retaining (A) and then removing the spline hub (B).

4. Remove the snap ring (A).

5. Remove the dual clutch assembly (A) by using the special service tool [SST No.: 09430-C1180].

Installation

NOTICE

- Check the applied state of grease on input shaft spline part (A) before installing the dual clutch assembly. If there is no grease on input shaft spline part, should apply the grease on each spline end to 10mm.
- If excessively applied grease, grease can be scattered by centrifugal force which can contaminate the clutch disc. This can cause a loss of friction force

Specified grease : Extreme pressure grease for vehicle
Quantity :0.15 - 0.25 g

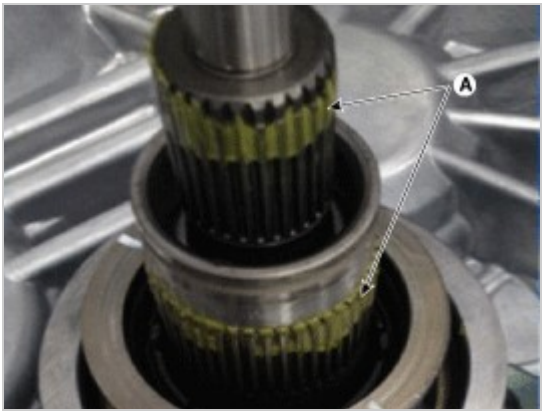

1. Install the SST (No.:09430-2A240) on the support bearing with in the dual clutch assembly (A).

2. Install the special service tool (09430-2A240) on the clutch housing side. Then, install the dual clutch assembly (A) by rotating the shaft of service tool.

3. Install the snap ring (A).

4. Install the spline hub (B) and the install the retaining ring (A).

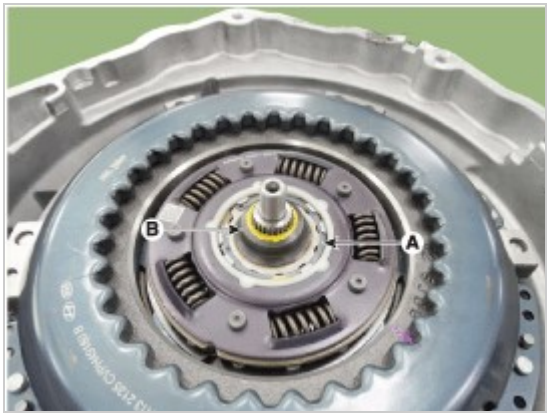

NOTICE

- After installation, check the retaining ring. (Be sure seated of the support washer in eight places.)

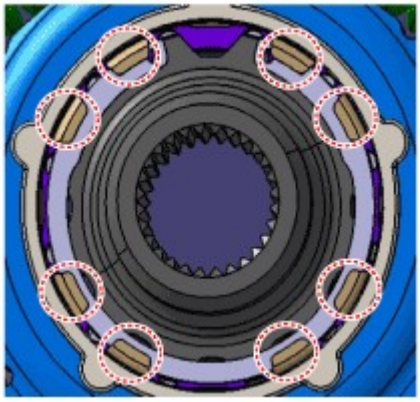

5. Install the hybrid motor assembly in the dual clutch transmission assembly.
   (Refer to Hybrid Motor System - "Hybrid Motor Assembly")
6. Install the dual clutch transmission to vehicle.
   (Refer to Dual Clutch Transmission System - "Dual Clutch Transmission")
7. Perform the work procedures for abrasion compensation reset after installing the new dual clutch assembly.
   (Refer to Clutch Actuator Assembly - "Adjustment")
8. Perform the clutch touch point learning procedure using the GDS after replacing the dual clutch assembly.

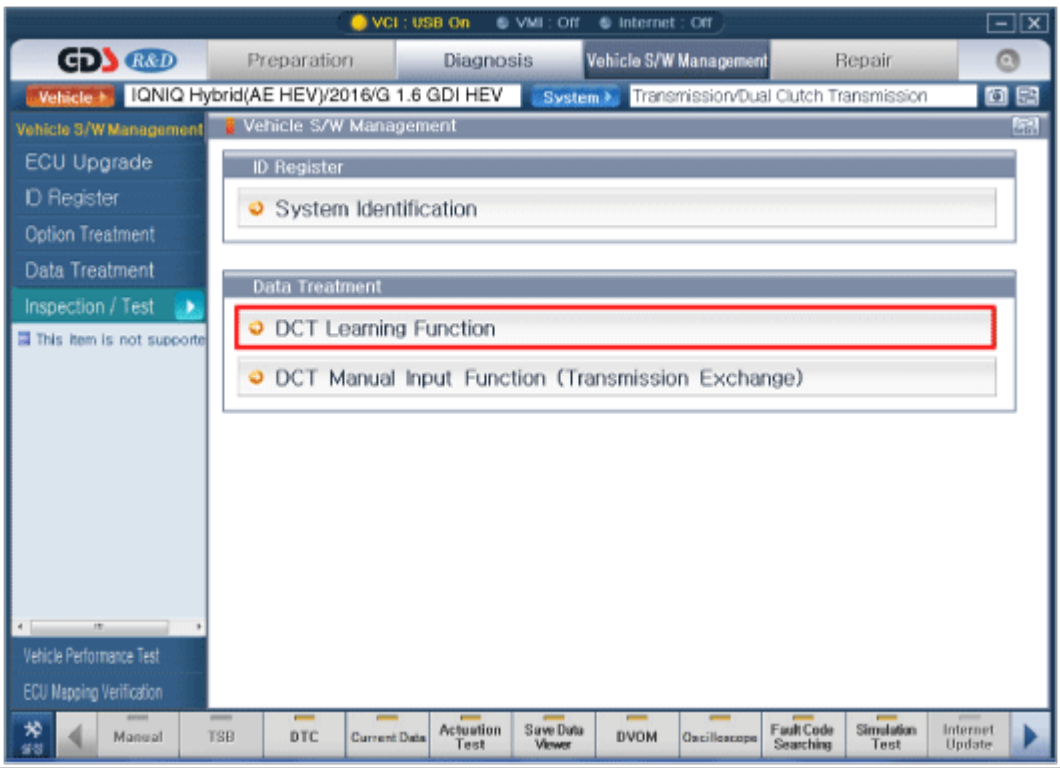

Components

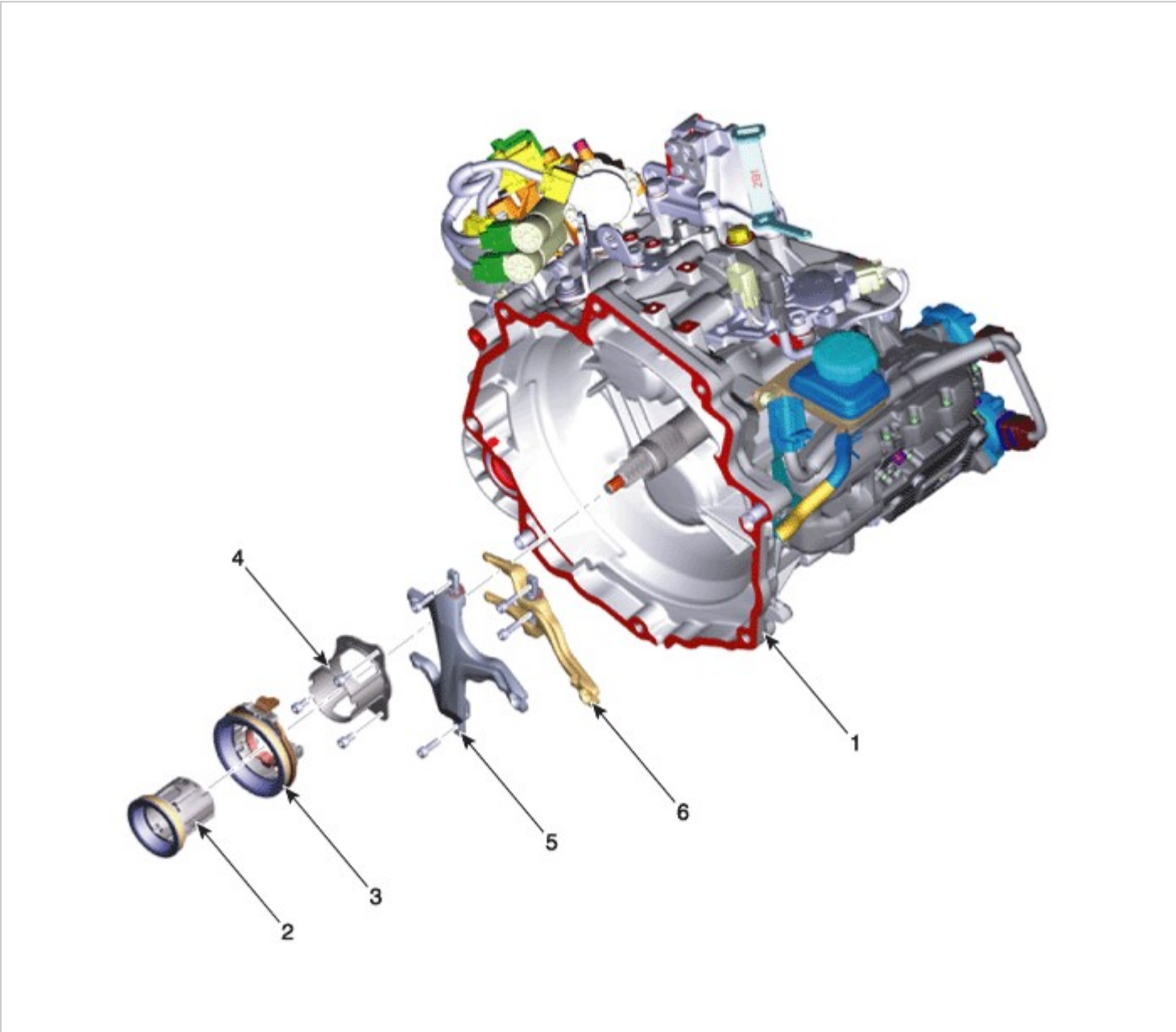

1. Clutch housing
2. Engagement bearing 2 (Even)
3. Engagement bearing 1 (Odd)
4. Engagement bearing sleeve
5. Engagement frok 1 (Odd)
6. Engagement frok 2 (Even)

Removal

1. Remove the dual clutch transmission from the vehicle.
   (Refer to Dual Clutch Transmission System - "Dual Clutch Transmission")
2. Remove the dual clutch assembly.
   (Refer to Dual Clutch System - "Dual Clutch Assembly")
3. Remove the clutch engagement bearing 1 (A) and 2 (B).

4. Remove the clutch engagement fork 1 (A) after loosening the mounting bolts.

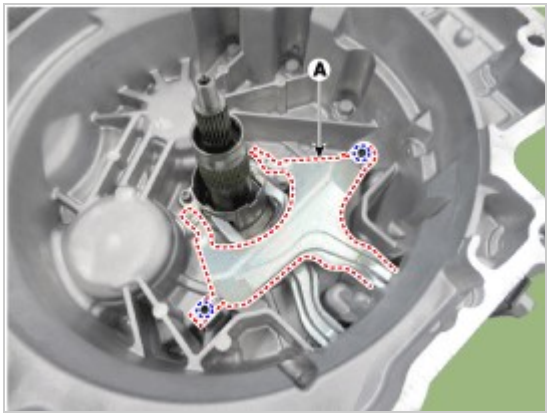

5. Remove the clutch engagement fork 2 (A) and engagement bearing sleeve (B)

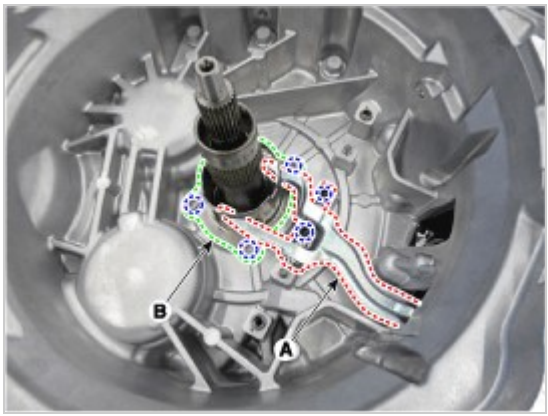

Installation

NOTICE

- Check the assembled state of the lock bush (A) and dowel pins (B).

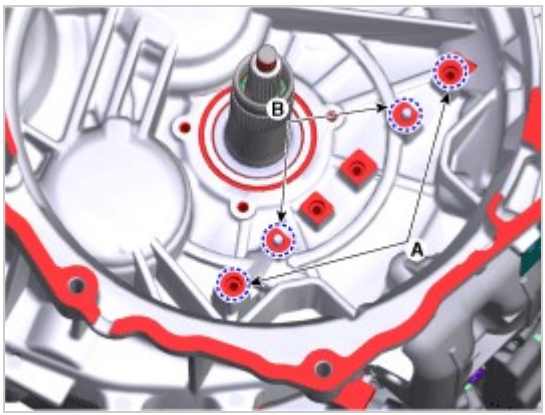

1. Apply coat of grease when installing the clutch fork.

Spec grease : Extreme pressure grease for vehicle
Amount :0.1 - 0.2g

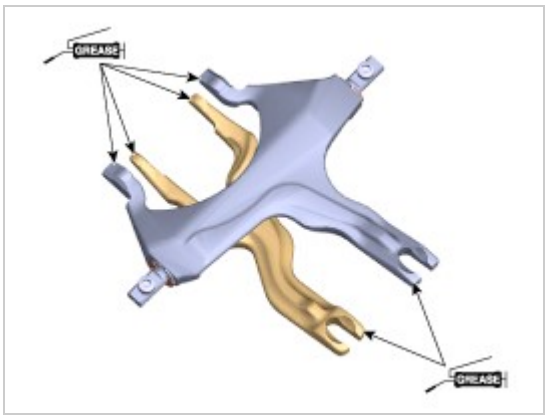

2. Install the clutch engagement fork 2 (A) and engagement bearing sleeve (B).

CAUTION

Be careful not to mix up the bolts for engagement bearing sleeve and the ones for clutch engagement forks.

- Bolts for engagement bearing sleeve (3EA) : White (14mm length)
- Bolts for clutch engagement fork 1 and fork 2 (4EA) : Black (20mm length)

NOTICE

- Take caution of the direction of fork assembly shaft when installing.

Tightening torque :
9.8 - 11.8 N.m (1.0 - 1.2 kgf.m, 7.2 - 8.7 lb-ft)

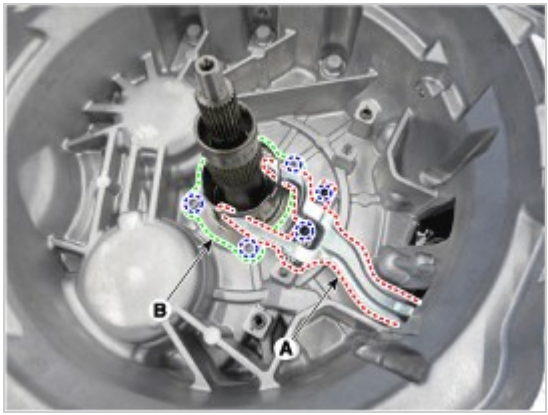

3. Install the clutch engagement fork 1 (A)

Tightening torque :
9.8 - 11.8 N.m (1.0 - 1.2 kgf.m, 7.2 - 8.7 lb-ft)

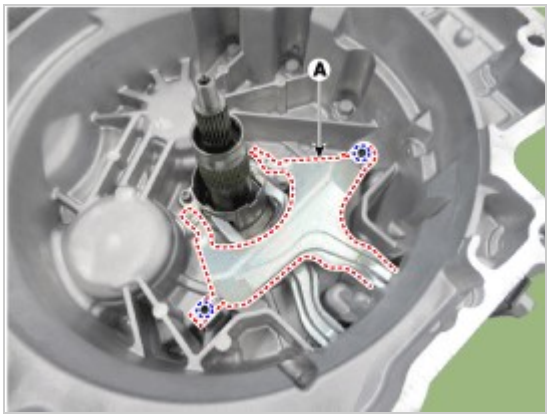

4. Install the engagement bearing 1 (A).

NOTICE

- Align the fork with the bearing plastic guide direction.

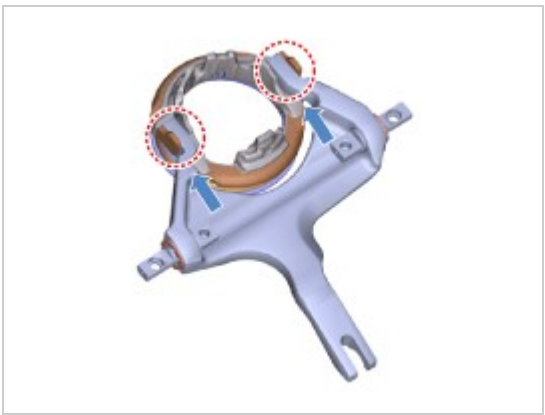

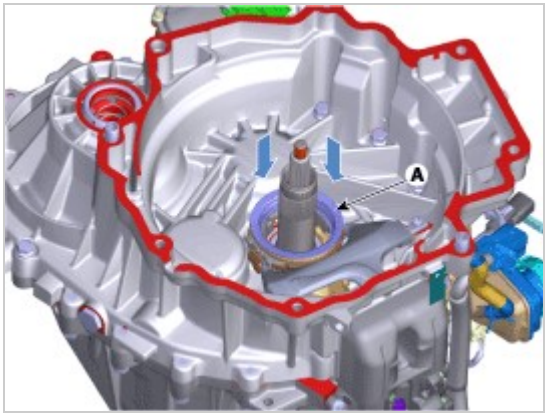

5. Install the engagement bearing 2 (A).

NOTICE

- Take caution and make sure that the bearing plastic stopper (B) is settled in the sleeve (C).

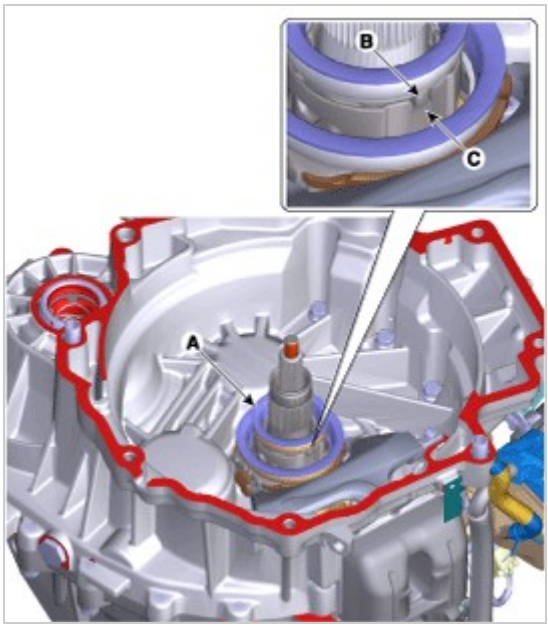

6. Install the dual clutch assembly.
   (Refer to Dual Clutch System - "Dual Clutch Assembly")
7. Install the dual clutch transmission to vehicle.
   (Refer to Dual Clutch Transmission System - "Dual Clutch Transmission")