Safety Precaution

Precautions to take before servicing high voltage system

DANGER

- Since hybrid vehicles contain a high voltage battery, if the high voltage system or vehicles are handled incorrectly, this might lead to a serious accidents like electric shock and electric leakage.

WARNING

- Be sure to shut off the high voltage by removing the safety plug before performing inspection or repairing the high voltage system.
  (Refer to "High Voltage Shut-off Procedures")
- The responsible worker keeps the removed safety plug to prevent the plug from being connected by mistake.
- Do not keep any metal objects (watch, ring etc.) while working on the high voltage system, which it can cause serious accidents like electric shock.
- Before beginning work on the high voltage system, the worker should wear personal protective equipment to prevent safety accidents.
  (Refer to "Personal Protective Equipment")
- Never allow workers who are not wear personal protective equipment to touch the high voltage system. High voltage components should be covered with an insulation sheet to prevent safety accidents.
- Use insulation tools when working on the high voltage system.
- Put the removed high voltage components on the insulation mat.

Information

- All the high voltage wiring and connectors are orange.
- A caution label for high voltage is attached to the high voltage components.
- High voltage components :
  High Voltage Battery Pack Assembly, Power Relay Assembly (PRA), BMS ECU, Hybrid Power Control Unit (HPCU), Hybrid Drive Motor, HSG, Electric A/C Compressor, Low DC/DC Converter (LDC), Power Cable, Electric Compressor etc.

CAUTION

- Inform of danger of high voltage by putting the "high voltage caution" on the vehicle as image below.

SAMPLE

DANGER

High Voltage : Do not touch during operation.

Person in charge : _____

Copy this page and put it after folding on the roof of the vehicle in service.

DANGER

High Voltage : Do not touch during operation.

Person in charge : _____

Personal Protective Equipment

Name	Illustration	Description
Insulation glove		Used when inspecting or working on the high voltage components [Insulation performance : 1000V / 300A or above]
Insulation shoes		Used when inspecting or working on the high voltage components

Insulation clothes		Used in the case below • During Removal & installation or inspection of the high voltage battery terminals or wiring, which spark might happen. • During working on the high voltage battery pack assembly.
Insulation helmet	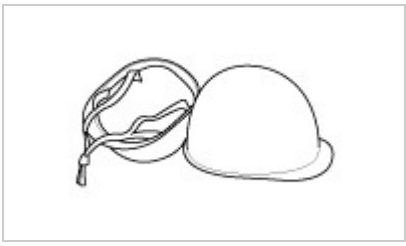	
Safety glasses		
Face shield		
Insulation mat	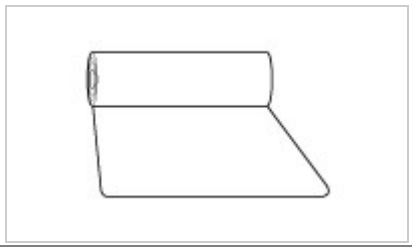	Putting the removed high voltage components on the insulation mat to prevent safety accidents.
Insulation sheet	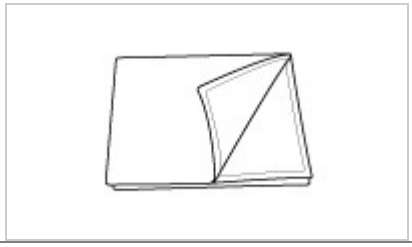	Covering the high voltage components with insulation sheet to prevent people who don’t wear the personal protective equipment from safety accidents.

Precautions to take when handling power cable

- Immediately insulate the high voltage terminal after reconnecting the terminal (use insulation tape).
- Tighten the high voltage terminal screw to spec torque.
- Be careful that (+) and (-) terminals do not come in contact when connecting or disconnecting power cable and busbar.

Precautions to take when handling high voltage battery

- When transporting high voltage battery, be sure to keep it flat and leveled. Failure to do so may decrease the battery performance and/or its life-span.
- High voltage battery"s performance may decrease if it is exposed to high temperature for a lengthy period. As a result, heat-treatment after painting must not exceed 70°C/ 30 minutes, or 80°C/ 20 minutes.

Precautions in case of fire on high voltage battery system

- If the fire occurs indoor, ventilate the area to let out hydrogen gas.
- ACB fire extinguisher is recommended for putting out the fire. (water may also be used).

Precautions in case of high voltage battery gas or electrolyte leakage

-

Turn OFF the Start button. Keep the Smart Key at least 2 meters away from the vehicle to prevent unintended engine start.

- Gas is hydrogen and alkaline vapor. If the leakage is indoor, ventilate the area immediately and evacuate to a safe location.
- If the leaked liquid comes in contact with skin, immediately neutralize the affected area with boric acid solution, then clean with tap water or saline solution.
- If the leaked vapor or liquid gets in the eye, immediately clean the affected eye with water then get medical attention.
- If the gas leakage is caused by high temperature, then do NOT use the battery until the high voltage battery fully cools down to room temperature.

Precautions when handling the vehicle after an accident

- Be sure to wear insulated gloves (or rubber gloves), protective goggles, insulated suite, and insulated boots.
- Do NOT touch bare cable under any condition.
  (Refer to "Precautions when handling power cable")
- In case of vehicle fire, put out the fire with ABC extinguisher. Do NOT use water (usage of large volume of water is okay, but small volume can worsen the situation).
- If more than half of the vehicle is submerged, then do NOT go near the Safety Switch or other high voltage related components. If such a component must be accessed, then move the vehicle to the safe location first before handling the component.
- Gas is hydrogen and alkaline vapor. If the leakage is indoor, ventilate the area immediately and evacuate to a safe location.
- If the leaked liquid comes in contact with skin, immediately neutralize the affected area with boric acid solution, then clean with tap water or saline solution.
- Refer to "High voltage cut-off procedure" if the high voltage needs to be cut off.

Preparations when servicing the accident vehicle

- Be sure to wear insulated gloves (or rubber gloves), protective goggles, insulated suite, and insulated boots.
- Boric Acid Power or Solution
- ABC Extinguisher
- Towel for cleaning electrolyte
- Vinyl tape (for insulating terminal)
- Mega ohm tester (for checking high voltage)

Precautions in case HEV is left unattended for a lengthy period

- Turn OFF the Start button. Keep the Smart Key at least 2 meters away from the vehicle to prevent unintended engine start.
- We recommend that HEV is driven at least 1 time for over 30 minutes every 2 months to protect and manage the high voltage battery (inquire at relevant team in HMC).
- When inspecting or exchanging the auxiliary battery, check high voltage battery SOC reset related problems.

Hybrid Vehicle Refrigerant Recovery / Charging Precautions

- Since the electric compressor uses high-voltage, you should use POE oil which have high Volumetric Resistivity.
- Do not use the same A/C recovery / charging station as conventional belt-driven compressors.

WARNING

- If the POE oil of the system gets mixed with PAG oil, then dielectric breakdown due to decreased volumetric Resistivity can occur and inoperative A/C compressor may result, A/C compressor may not work

High Voltage Shut-off Procedures

WARNING

- Be sure to read and follow the "General Safety Information and Caution" before doing any work related with the high voltage system. Failure to follow the safety instructions may result in serious electrical injuries.
- Be sure to read and follow the "High Voltage Shut-off Procedures" before doing any work related with the high voltage system. Failure to follow the safety instructions may result in serious electrical injuries.

Information

- High voltage components :
  High Voltage Battery Pack Assembly, Power Relay Assembly (PRA), BMS ECU, Hybrid Power Control Unit (HPCU), Hybrid Drive Motor, HSG, Electric A/C Compressor, Low DC/DC Converter (LDC), Power Cable, Electric Compressor etc.

1. Turn the ignition switch OFF and disconnect the auxiliary 12V battery negative (-) terminal.

2. Remove the safety plug cover (A).

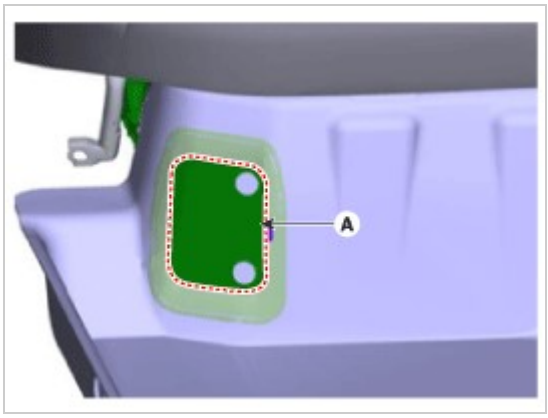

3. Unfasten the hook (A) and then remove the safety plug (C) by pulling the lever (B) to the direction of arrow.

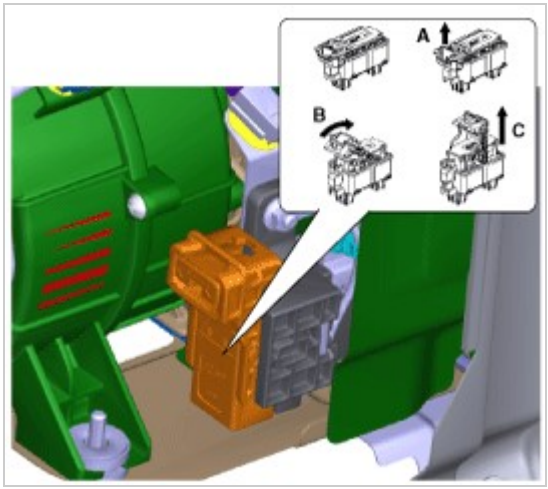

4. Wait for more than 5 minutes so that the capacitor in the high voltage system can be fully discharged.
5. Measure the voltage between the inverter terminals to check that the capacitor in the inverter is discharged completely.
   (1) Remove air cleaner assembly and air duct.
   (Refer to Engine Mechanical System - "Air Cleaner")
   (2) Disconnect the inverter power cable (A).

Information

- Disconnect the inverter power cable as the procedures below.

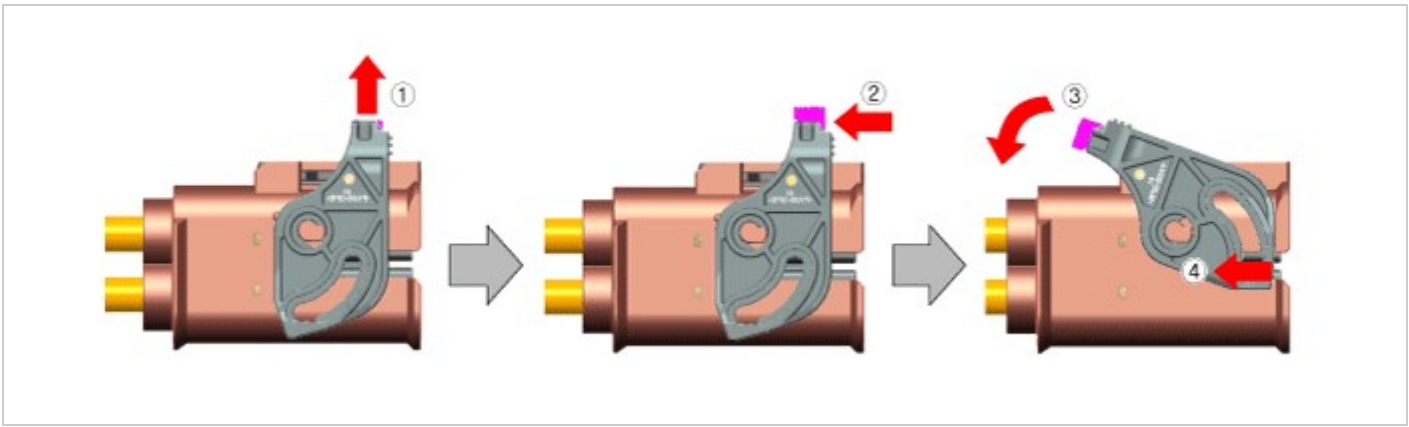

(3) Measure the voltage between the inverter (+) terminal and the inverter (-) terminal.

Less than 30V : High voltage circuit properly shut
More than 30V : Fault on high voltage circuit

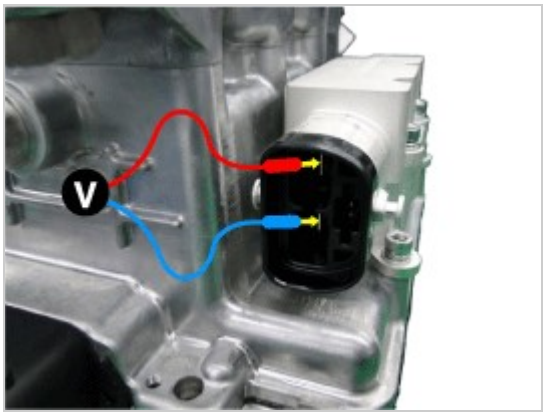

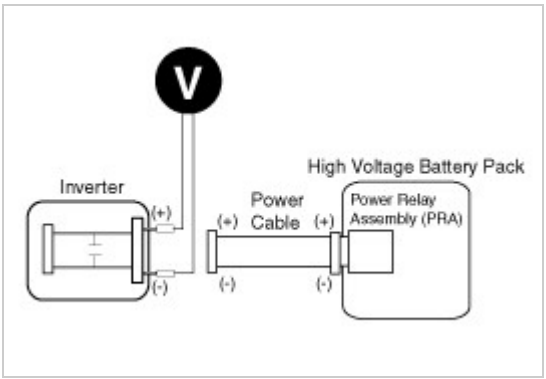

WARNING

- If measured more than 30V, check if the safety plug is removed completely.If measured more than 30V despite the safety plug is removed, there can be serious problems on the high voltage circuit. In this case, check DTC and never touch the high voltage system circuits.

Engine Electrical System

Specifications

Ignition System

Items		Specification
Ignition coil	Primary resistance	0.56Ω ± 10 %
Spark plugs	Type	ELR9ISP8+
	Gap	0.7 - 0.8 mm (0.0275 - 0.0315 in)

Charging System

Item	Specification
Type	LiPB (Lithium ion Polymer Battery)
Number of Cells	8 Cells
Rated Voltage (V)	12.8
Capacity (Ah)	30
Max Power (kW)	1.8

Engine Electrical System

Trouble Shooting

Ignition System

Symptom	Suspect area	Remedy
Vehicle indicates Ready in dash, but engine will not run when requested by the HPCU (HEV module).	Ignition coil	Inspect ignition coil, or replace as required
	Spark plugs	Inspect spark plugs, or replace as required
	Ignition wiring disconnected or broken	Repair wiring, or replace as required

Rough idle	Ignition wiring	Repair wiring, or replace as required
	Ignition coil	Inspect ignition coil, or replace as required
Engine hesitates/poor acceleration	Spark plugs and spark plug cables	Inspect spark plugs / cable, or replace as required
	Ignition wiring	Repair wiring, or replace as required
Poor mileage	Spark plugs and spark plug cables	Inspect spark plugs / cable, or replace as required

Charging System

Symptom	Suspect area	Remedy
Charging warning indicator does not light with Start/Stop Button "ON" and Hybrid System off.	Fuse blown	Check fuses
	Light burned out	Replace light
	Wiring connection loose	Tighten loose connection
	LDC problem	Check the LDC. Refer to HC group
Charging warning indicator does not go out with Hybrid System on. (Battery requires frequent recharging)	Battery cable loose, corroded or worn	Inspect cable connection, repair or replace cable
	LDC problem	Check the LDC. Refer to HC group
	Wiring	Repair or replace wiring
Overcharge	LDC problem	Check the LDC. Refer to HC group
	Voltage sensing wire	Repair or replace wiring
Discharge	Wiring connection loose or short circuit	Inspect wiring connection, repair or replace wiring
	LDC problem	Check the LDC. Refer to HC group
	Poor grounding	Inspect ground or repair
	Worn battery	Replace battery
	Abnormal parasitic draw from the vehicle	Install a current probe to measure current. It should be less than 0.05A (50mA) after Hybrid System off and waiting 10 minutes. Make sure trunk light is removed for this test.

Starting System

Symptom	Suspect area	Remedy
Vehicle will not indicate Ready in dash at Hybrid System on.	Auxiliary 12V battery charge low	Charge or replace auxiliary 12V battery
	Auxiliary 12V battery cables loose, corroded or worn out	Repair or replace cables
	Transaxle range switch (Vehicle with automatic transaxle only)	Refer to AT group-automatic transaxle
	Fuse blown	Replace fuse
	Ignition switch faulty	Replace

Engine Electrical System

Description

Ignition timing is controlled by the electronic control ignition timing system. The standard reference ignition timing data for the engine operating conditions are preprogrammed in the memory of the ECM (Engine Control Module).

The engine operating conditions (speed, load, warm-up condition, etc.) are detected by the various sensors. Based on these sensor signals and the ignition timing data, signals to interrupt the primary current are sent to the ECM. The ignition coil is activated, and timing is controlled.

Engine Electrical System

On-vehicle Inspection

Spark test

1. Check for DTCs.

> **NOTICE**
> - If a DTC is present, perform troubleshooting in accordance with the procedure for that DTC.
> (Refer to DTC guide)

2. Check if sparks occur.
   (1) Remove the engine cover.

(2) Remove the ignition coils.

(3) Using a spark plug wrench, remove the spark plugs.

(4) Disconnect the 4 injector connectors.

(5) Ground the spark plug to the engine.

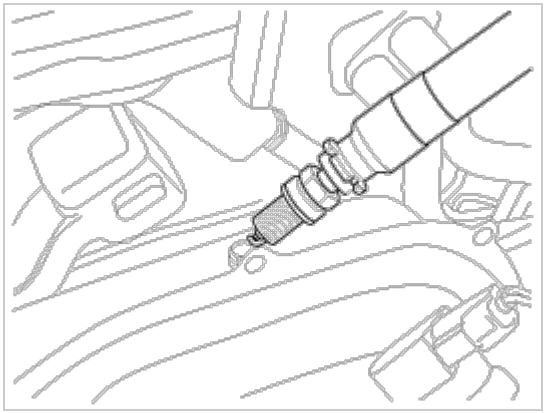

(6) Check if sparks occur at each spark plug while engine is being cranked.

NOTICE

- Do not crank the engine for more then 5 seonds.

3. If sparks do not occur, perform the following test.

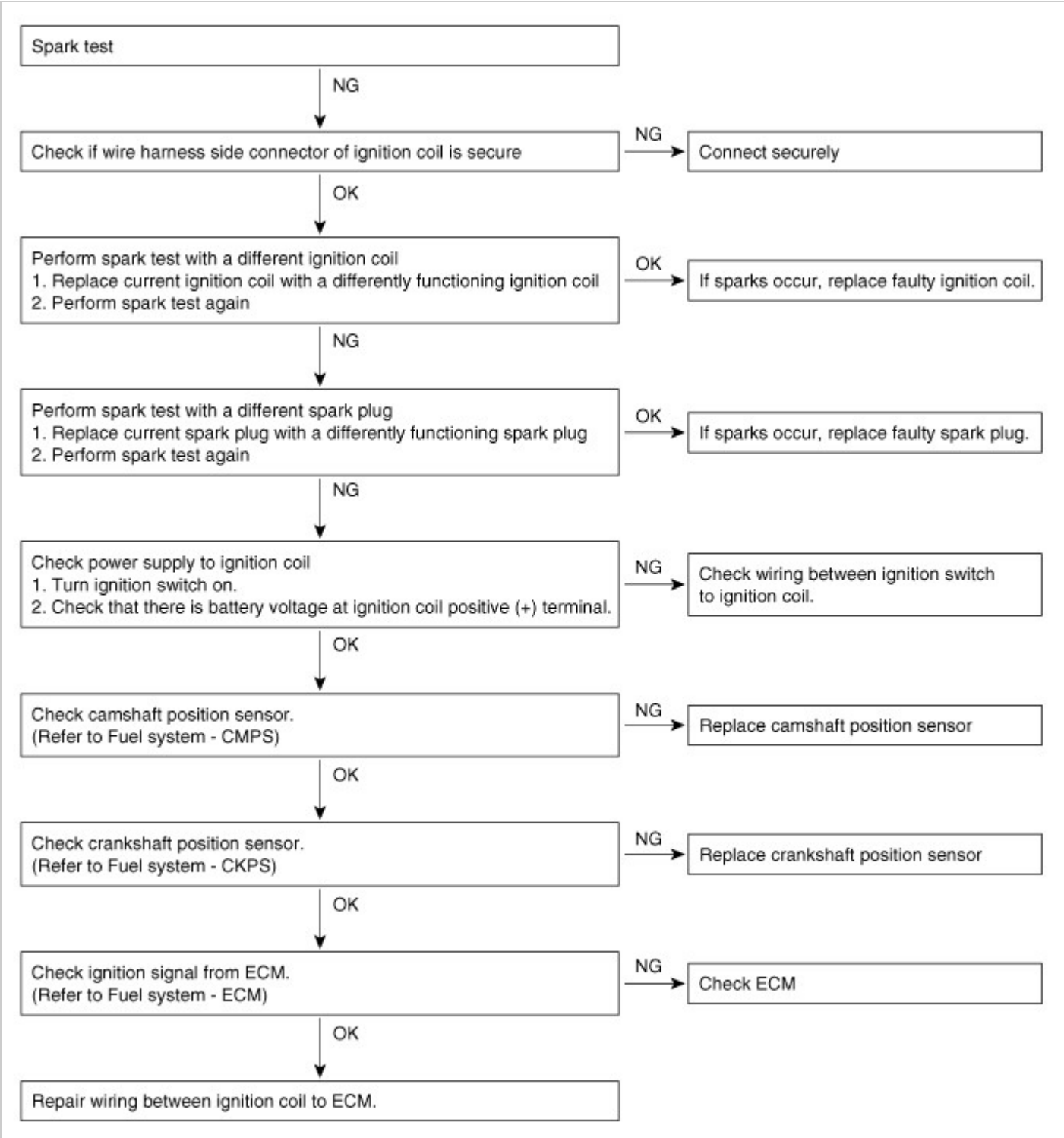

4. Using a spark plug wrench, install spark plugs.
5. Install the ignition coils.
6. Install the cylinder head center cover and the engine cover.

Engine Electrical System

Specifications

Items	Specification
Power supply (V)	12
Primary resistance	0.56Ω ± 10 %

Engine Electrical System

Description

An ignition coil is an induction coil in an engine"s ignition system which transforms the battery"s low voltage to the high voltage needed to create an electric spark in the spark plugs to ignite the fuel. Coils have an internal resistor while others rely on a resistor wire or an external resistor to limit the current flowing into the coil from the battery 12V supply.

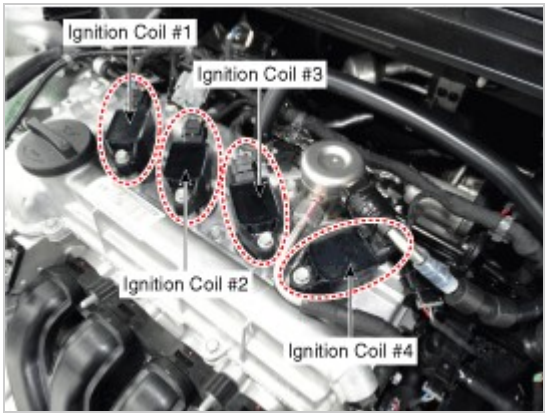

Circuit Diagram

[Circuit Diagram]

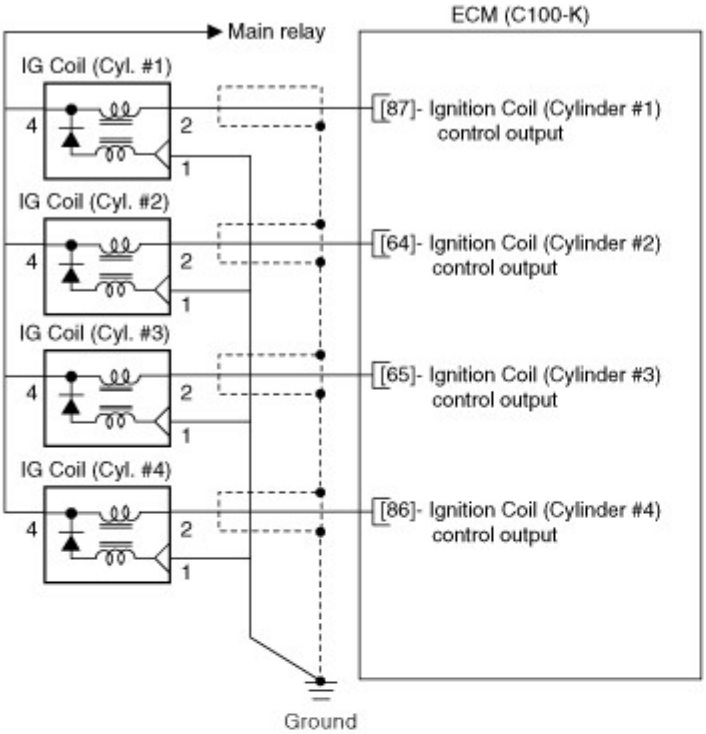

[Connection Information]

Ignition Coil (Cylinder #1) (C118-1)

Treminal	Connected to	Function
1	Ground	Sensor ground
2	ECM C100-K [87]	Ignition Coil #1 control output
3	-	-
4	Main relay	Battery power (B+)

Ignition Coil (Cylinder #2) (C118-2)

Treminal	Connected to	Function
1	Ground	Sensor ground
2	ECM C100-K [64]	Ignition Coil #2 control output
3	-	-
4	Main relay	Battery power (B+)

Ignition Coil (Cylinder #3) (C118-3)

Treminal	Connected to	Function
1	Ground	Sensor ground
2	ECM C100-K [65]	Ignition Coil #3 control output
3	-	-
4	Main relay	Battery power (B+)

Ignition Coil (Cylinder #4) (C118-4)

Treminal	Connected to	Function
1	Ground	Sensor ground
2	ECM C100-K [86]	Ignition Coil #4 control output
3	-	-
4	Main relay	Battery power (B+)

[Harness Connector]

C118-1,2,3,4
IG Coil #1,2,3,4

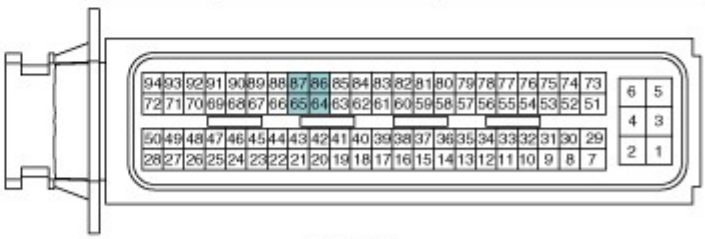

C100-K

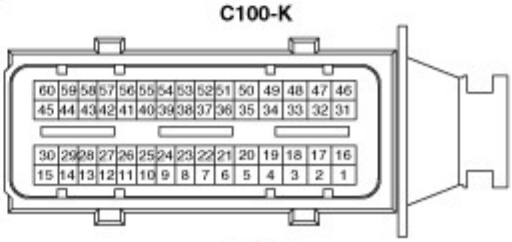

C100-A
ECM

Removal

1. Turn the ignition switch OFF and disconnect the negative (-) battery cable.

2. Remove the air cleaner assembly.
   (Refer to Engine Mechanical Sysmtem - "Air Cleaner")
3. Disconnect the ignition coil connector (A).

NOTICE

- When removing the ignition coil connector, pull the lock pin (A) and push the clip (B).

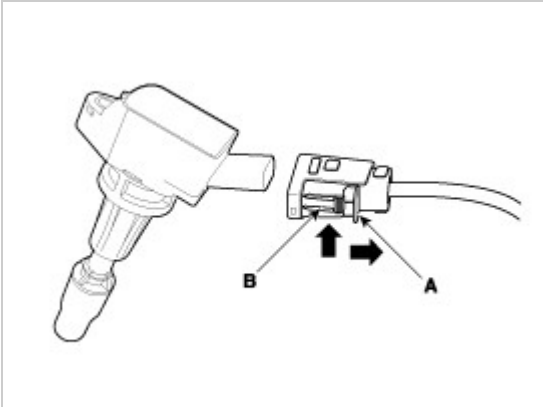

4. Remove the ignition coil (A).

Ignition coil installation bolts :
9.8 - 11.8 N.m (1.0 - 1.2 kgf.m, 7.2 - 8.7 lb-ft)

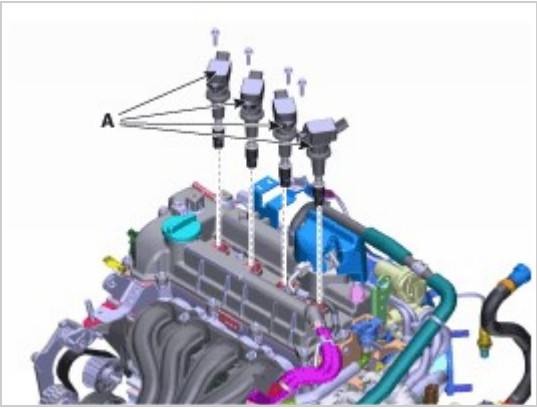

Installation

1. Install in the reverse order of removal.

Engine Electrical System

Specifications

Items	Specification
Type	ELR9ISP8+
Plug Gap (mm)	0.7 - 0.8mm (0.0275 - 0.0315 in)

Engine Electrical System

Description

A spark plug is a device for delivering electric current from an ignition system to the combustion chamber of a spark-ignition engine to ignite the compressed fuel/air mixture therein by means of an electric spark, while containing combustion pressure within the engine. A spark plug has a metal threaded shell, electrically isolated from a central electrode by a porcelain insulator .

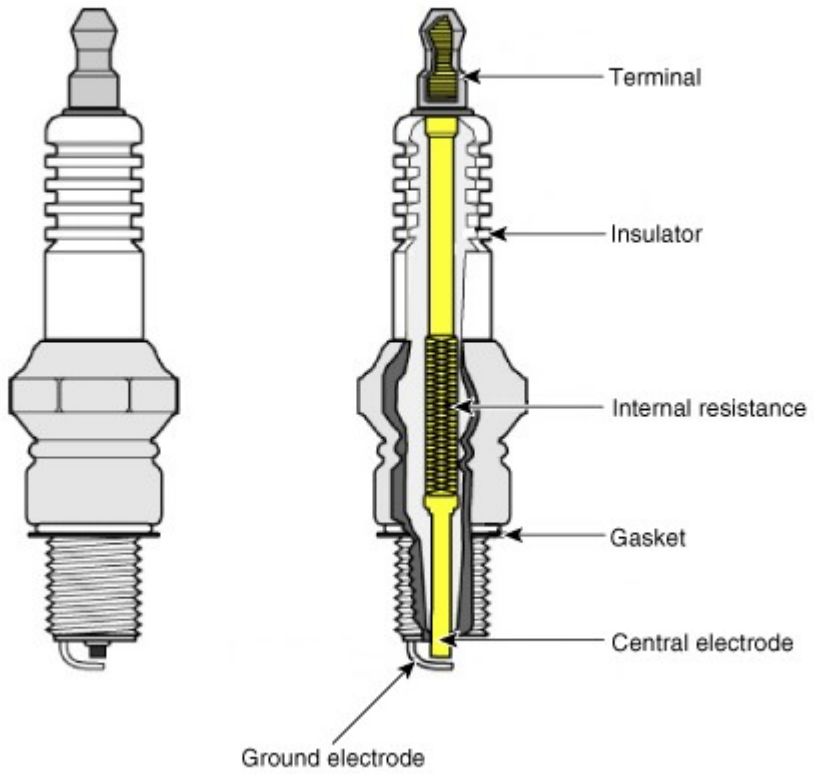

Inspection

[On vehicle inspection]

1. Accelerate the engine to about 3,000rpm 3 times or more.
2. Remove the spark plug.
3. Check the spark plug visually.
   If the electrode is dry, the spark plug is normal.
   If the electrode is wet, check the damage and electrode gap as below.

[Component Inspection]

1. Check the spark plug for any damage on its thread and insulator.
   If there is damage, replace the spark plug.

> **⚠ CAUTION**
> - Be careful that no contaminates enter into spark plug holes.

2. Check the electrode. Measure the insulation resistance with an ohmmeter.
   If the resistance is less than the specified value, adjust the electrode gap.

Specification :10 MΩ or more

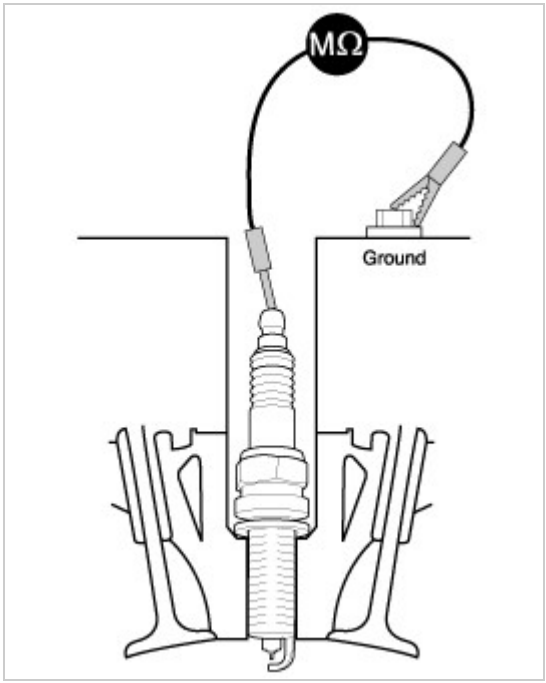

3. Check the spark plug electrode gap.
   If the gap is greater than the maximum, replace the spark plug.

Specification :0.7 - 0.8 mm (0.0275 - 0.0315 in)

NOTICE

- When adjusting the gap of a new spark plug, bend only the base of the ground electrode. Do not touch the tip.
  Never attempt to adjust the gap on a plug being used.

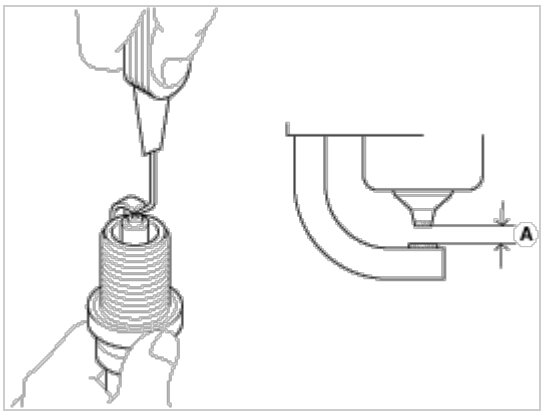

Cleaning

The combustion temporarily becomes unstable, due to the aged fuel and the carbon deposits accumulated on the spark plug(s) after long-term storage.

[1st Method]

1. Start the engine and keep the engine running at idle for 2 minutes.
2. Step on the accelerator pedal and hold it steady at 4500rpm with the shift lever in N position to warm up the engine until the temperature of the engine coolant reaches 80°C.
3. Keep the engine running at 2500-3000rpm in the N position for 15minutes.

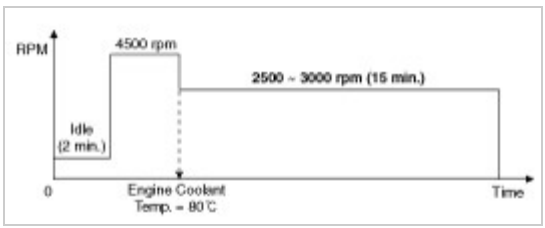

[2st Method]

NOTICE

- The 2nd method should be performed only if the 1st method fails (the misfire-related codes recur).

1. Start the engine and keep the engine running at idle for 2 minutes.
2. Drive the vehicle for over 20minutes, keeping the engine speed above 3500rpm.

NOTICE

- If equipped with manual transaxle, shift the gear properly to keep the engine speed above 3500rpm.

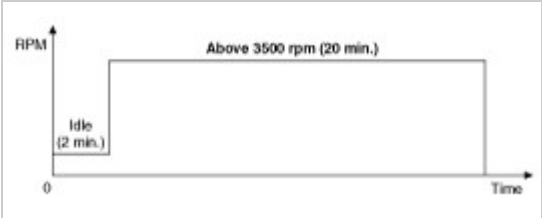

Removal

1. Remove the ignition coil.
   (Refer to Ignition System - "Ignition Coil")
2. Using a spark plug wrench, remove the spark plug (A).

Tightening torque :
14.7 - 24.5 N.m (1.5 - 2.5 kgf.m, 10.9 - 18.0 lb-ft)

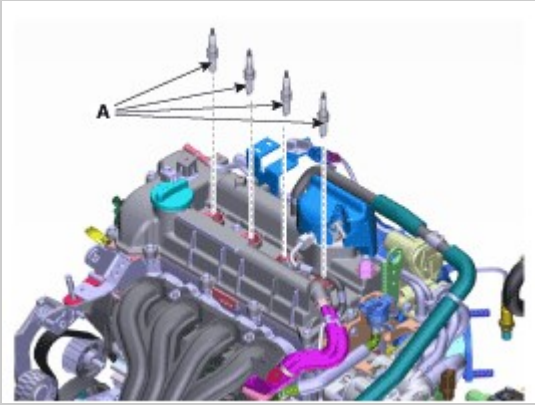

CAUTION

- Be careful that no contaminates enter into spark plug holes.

Installation

1. Install in the reverse order of removal.

Engine Electrical System

On-vehicle Inspection

CAUTION

- Check that the auxiliary 12V battery cables are connected to the correct terminals.
- Disconnect the auxiliary 12V battery cables when the battery is given a quick charge.
- Never disconnect the auxiliary 12V battery while the engine is running.

Check The Auxiliary 12V Battery Terminals and Fuses

1. Check that the auxiliary 12V battery terminals are not loose or corroded.
2. Check the fuses for continuity.

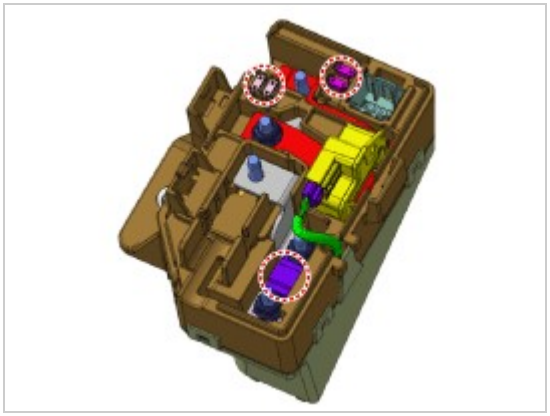

Check Discharge Warning Light Circuit

1. Warm up the engine and then turn it off.
2. Turn off all accessories.
3. Turn the ignition switch "ON". Check that the discharge warning light is lit.
4. Start the engine and Check that the light goes off.
   If the light does not go off as specified, then refer to the LDC diagnostics section for further diagnosis of auxiliary 12V battery charging system problem.

Engine Electrical System

Specifications

Item	Specification
Type	LiPB (Lithium ion Polymer Battery)
Number of Cells	8 Cells
Rated Voltage (V)	12.8
Capacity (Ah)	30
Max Power (kW)	1.8

Engine Electrical System

Components

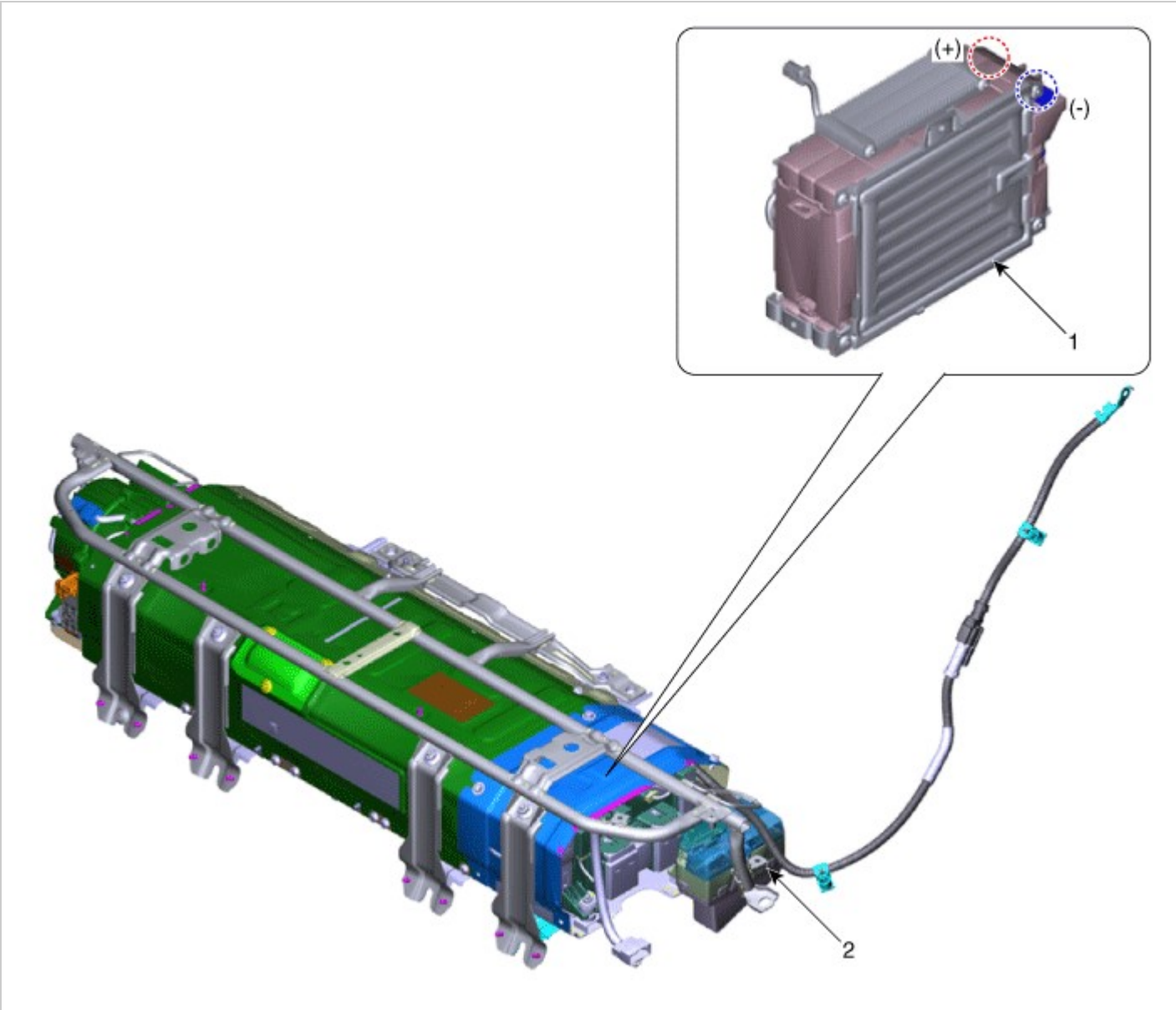

1. Auxiliary 12V Battery
2. 12V Junction Box

Removal and Installation

WARNING

- Be sure to read and follow the “General Safety Information and Caution” before doing any work related with the high voltage system. Failure to follow the safety instructions may result in serious electrical injuries.

1. Shut off the high voltage.
   (Refer to "High voltage Shut-off Procedures")
2. Remove the rear seat cushion.
   (Refer to Body - "Rear Seat Assembly")
3. Remove the rear door scuff trim.
   (Refer to Body - "Door Scuff Trim")
4. Remove the negative (-) battery cable cover (A).

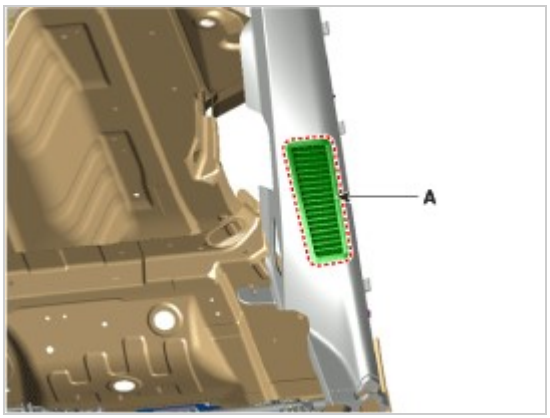

5. Disconnect the negative (-) battery cable connector (A).

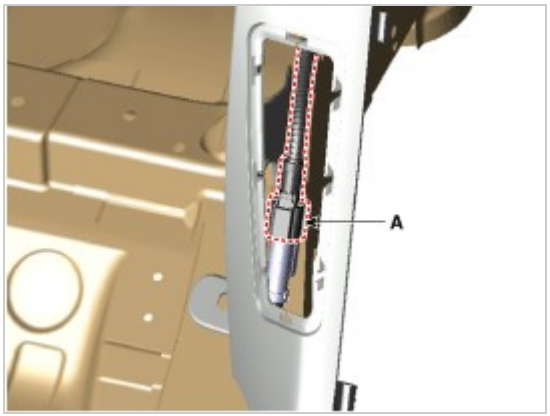

6. Remove the upper frame (A) after loosening the mounting bolts and nuts.

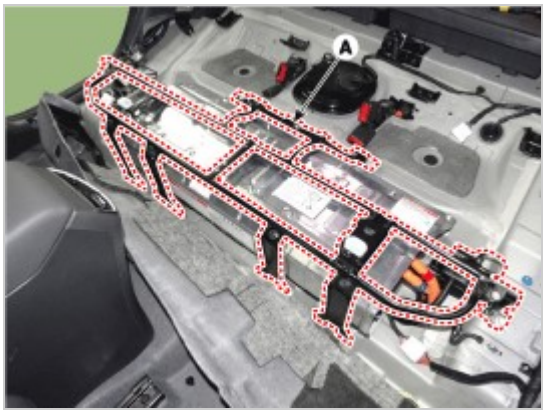

7. Remove the high voltage battery rear cover (A) after loosening the mounting bolts and nuts.

8. Remove the inlet cooling duct.
   (Refer to Hybrid Control System - "Cooling Duct")
9. Disconnect the battery (+) cable connector (A).
10. Remove the battery (+) cable assembly (B) after loosening the nuts.

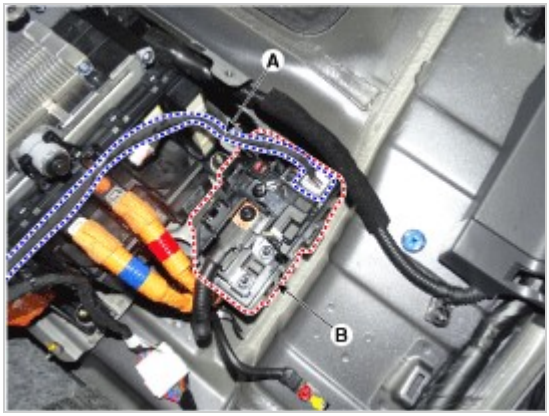

11. Remove the power relay assembly (PRA).
    (Refer to Hybrid Control System - "Power Relay Assembly (PRA)")
12. Remove the battery mounting bolts (A-2ea).

13. Remove the auxiliary 12V battery (A) after disconnect the connector (B).

Troubleshooting

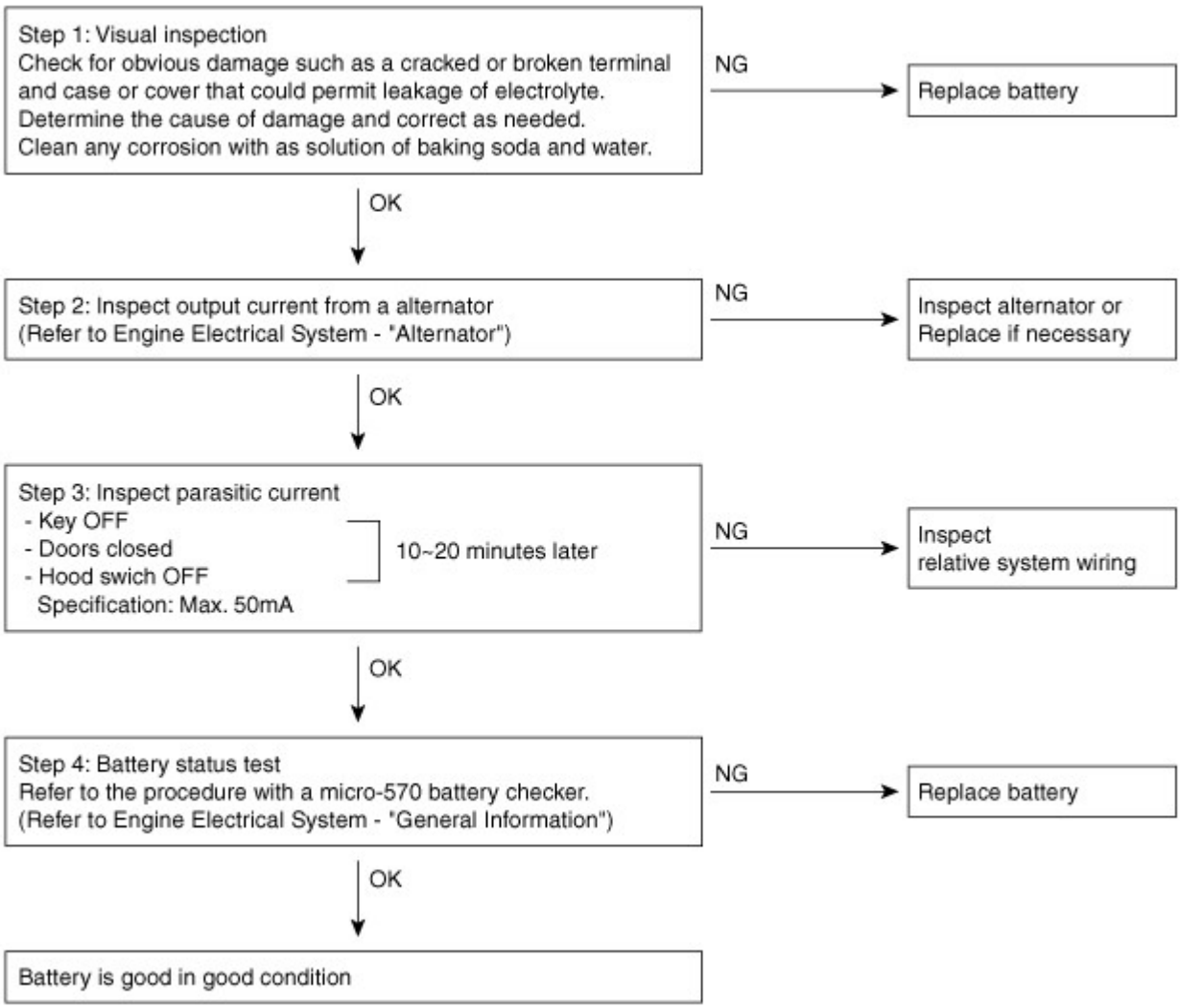

Cruise Control

The cruise control system is engaged by the cruise "ON/OFF" main switch located on right of steering wheel column. The system has the capability to cruise, coast, accelerate and resume speed.

It also has a safety interrupt, engaged upon depressing brake or shifting select lever.

The HCU is the control module for this system. The main components of cruise control system are mode control switches, transaxle range switch, brake switch, vehicle speed, ECM, MCU and HCU.

The HCU contains a low speed limit which will prevent system engagement below a minimum speed of 40km/h (25mph).

The operation of the controller is controlled by mode control switches located on steering wheel.

Transaxle range switch and brake switch are provided to disengage the cruise control system. The switches are on brake pedal bracket and transaxle. When the brake pedal is depressed or select lever shifted, the cruise control system is electrically disengaged and driver request torque is returned to the idle position.

Cruise MAIN SWitch (ON/OFF)

The cruise control system is engaged by pressing the cruise "ON/OFF" main switch. Pressing the cruise "ON/OFF" main switch again releases cruise control mode, clears cruise memory speed, and puts vehicle in a non-cruise mode.

Set/Coast Switch (SET/–)

The "SET/–" switch located on right of steering wheel column has two functions.

The set function - Push the "SET/–" switch and release it at the desired speed. The SET indicator light in the instrument cluster will illuminate. Release the accelerator pedal. The desired speed will automatically be maintained.

The coast function - Push the "SET/–" switch and hold it when the cruise control is on. The vehicle will gradually slow down. Release the switch at the desired speed. The desired speed will be maintained.

Push the "SET/–" switch and release it quickly. The cruising speed will decrease by 1.6km/h (1.0mph).

Resume/Accel SWitch (RES/+)

The "RES/+" switch located on right of steering wheel column has two functions.

The resume function - If any method other than the cruise "ON/OFF" main switch was used to cancel cruising speed temporarily and the system is still activated, the most recent set speed will automatically resume when the "RES/+" switch is pushed. It will not resume, however, if the vehicle speed has dropped below approximately 40km/h (25mph).

The accel function - Push the "RES/+" switch and hold it when the cruise control is on. The vehicle will gradually accelerate. Release the switch at the desired speed. The desired speed will be maintained.

Push the "RES/+" switch and release it quickly. The cruising speed will increase by 1.6km/h (1.0mph).

Cancel Switch (CANCEL)

The cruise control system is temporarily disengaged by pushing the "CANCEL" switch.
Cruise speed canceled by this switch can be recovered by pushing the "RES/+" switch.

Trouble Symptom Charts

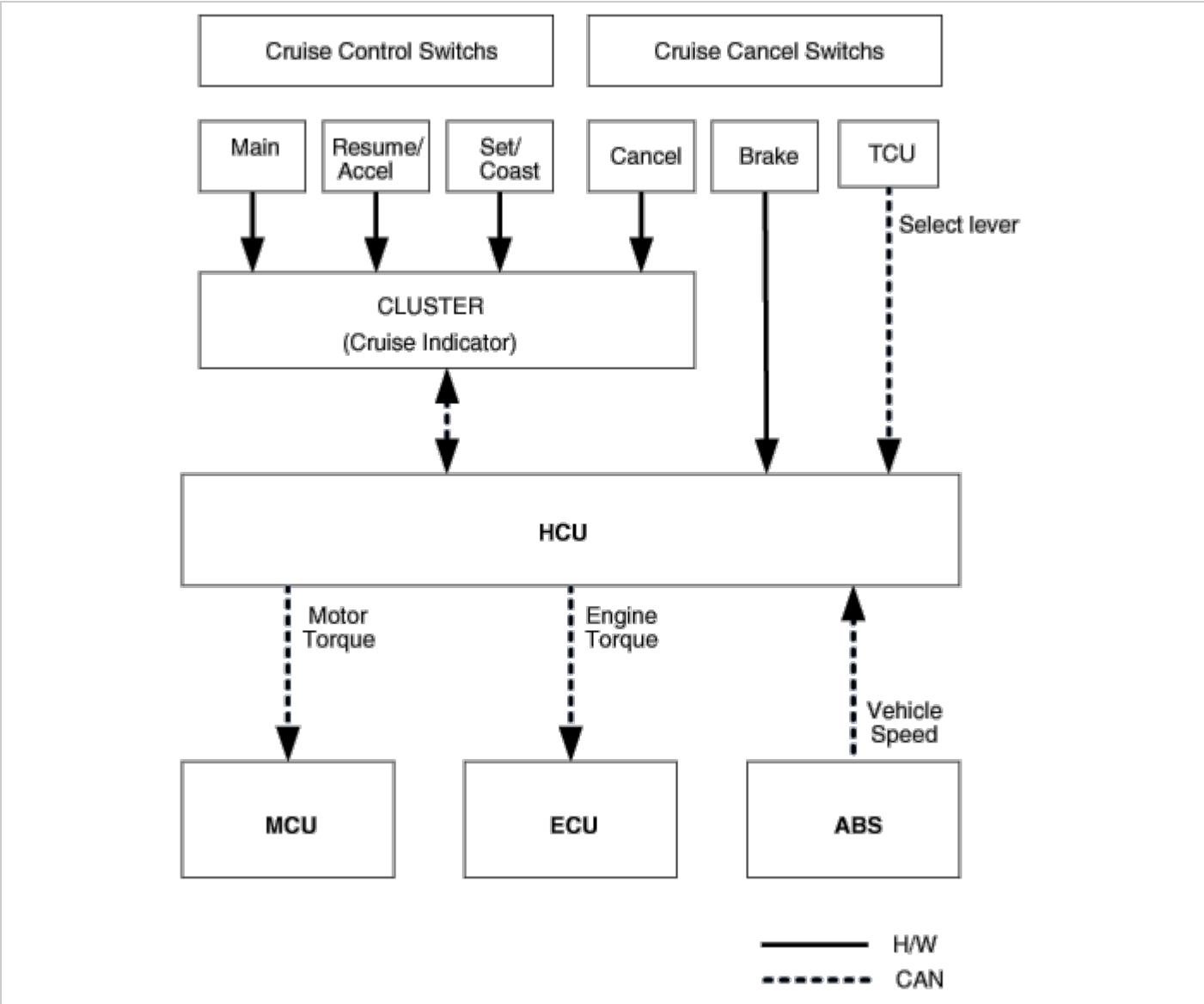

Component Parts and Function Outline

Component part		Function
ECU		Controls engine.
MCU		Controls drive motor.
ABS		Sends vehicle speed to HCU.
HCU		Receives signals from sensor and control switches.
Cluster (Cruise control indicator)		Illuminate when CRUISE main switch is ON (Built into cluster)
Cruise Control switches	ON/OFF switch	Switch for automatic speed control power supply.
	Resume/Accel switch	Controls automatic speed control functions by Resume/Accel switch (Set/Coast switch)
	Set/Coast switch	
Cancel switches	Cancel switch	Sends cancel signals to HCU
	Brake-pedal switch	
	Transaxle range switch (TCU)	

Trouble Symptom Charts

Trouble Symptom 1

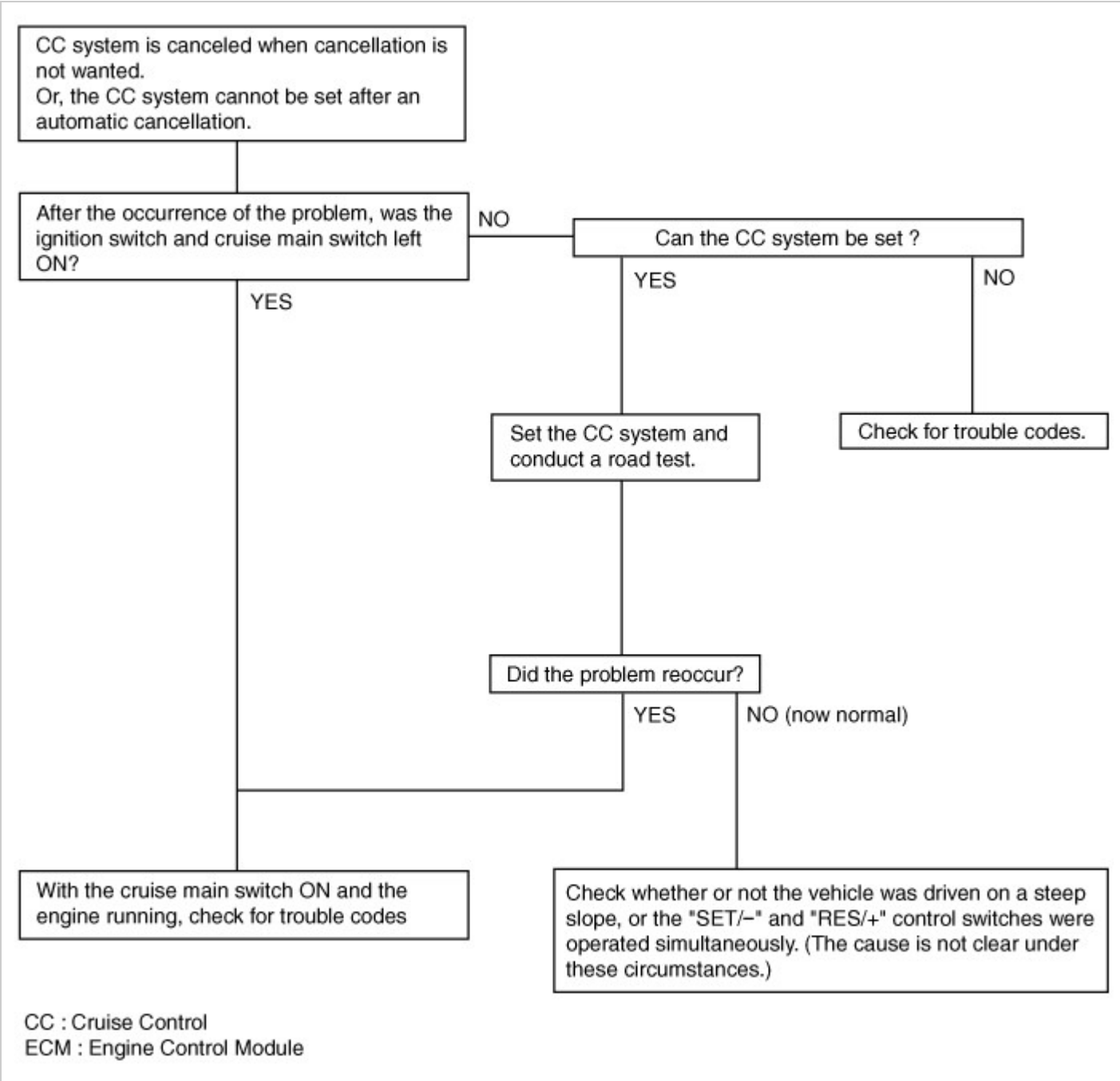

Trouble Symptom 2

Trouble symptom	Probable cause	Remedy
The set vehicle speed varies greatly upward or downward "Surging" (repeated alternating acceleration and deceleration) occurs after setting	Malfunction of the vehicle speed sensor circuit	Repair the vehicle speed sensor system, or replace the part
	Malfunction of brake system	Check input and output signals at brake system

Trouble Symptom 3

Trouble symptom	Probable cause	Remedy
The CC system is not canceled when the brake pedal is depressed	Damaged or disconnected wiring of the brake pedal switch or malfunction of the brake stroke sensor or circuit	Repair the harness or replace the brake pedal switch
	Malfunction of the brake signals or brake system	Check input and output signals at HCU or brake system

Trouble Symptom 4

Trouble symptom	Probable cause	Remedy
The CC system is not canceled when the shift lever is moved to the "N" position (It is canceled, however, when the brake pedal is depressed)	Damaged or disconnected wiring of inhibitor switch input circuit	Repair the harness or repair or replace the inhibitor switch
	Improper adjustment of inhibitor switch	
	Malfunction of the TCU signals	Check input and output signals at TCU

Trouble Symptom 5

Trouble symptom	Probable cause	Remedy
Cannot decelerate (coast) by using the "SET/–" switch	Temporary damaged or disconnected wiring of "SET/–" switch input circuit	Repair the harness or replace the "SET/–" switch
	Malfunction of the cluster signals	Check input and output signals at cluster

Trouble Symptom 6

Trouble symptom	Probable cause	Remedy
Cannot accelerate or resume speed by using the "RES/+" switch	Damaged or disconnected wiring, or short circuit, or "RES/+" switch input circuit	Repair the harness or replace the "RES/+" switch
	Malfunction of the cluster signals	Check input and output signals at cluster

Trouble Symptom 7

Trouble symptom	Probable cause	Remedy
CC system can be set while driving at a vehicle speed of less than 40km/h (25mph), or there is no automatic cancellation at that speed	Malfunction of the vehicle-speed sensor circuit	Repair the vehicle speed sensor system, or replace the part
	Malfunction of the brake system	Check input and output signals at brake system

Trouble Symptom 8

Trouble symptom	Probable cause	Remedy
The cruise main switch indicator lamp does not illuminate (But CC system is normal)	Damaged or disconnected bulb of cruise main switch indicator lamp	Repair the harness or replace the part.
	Harness damaged or disconnected	

Components

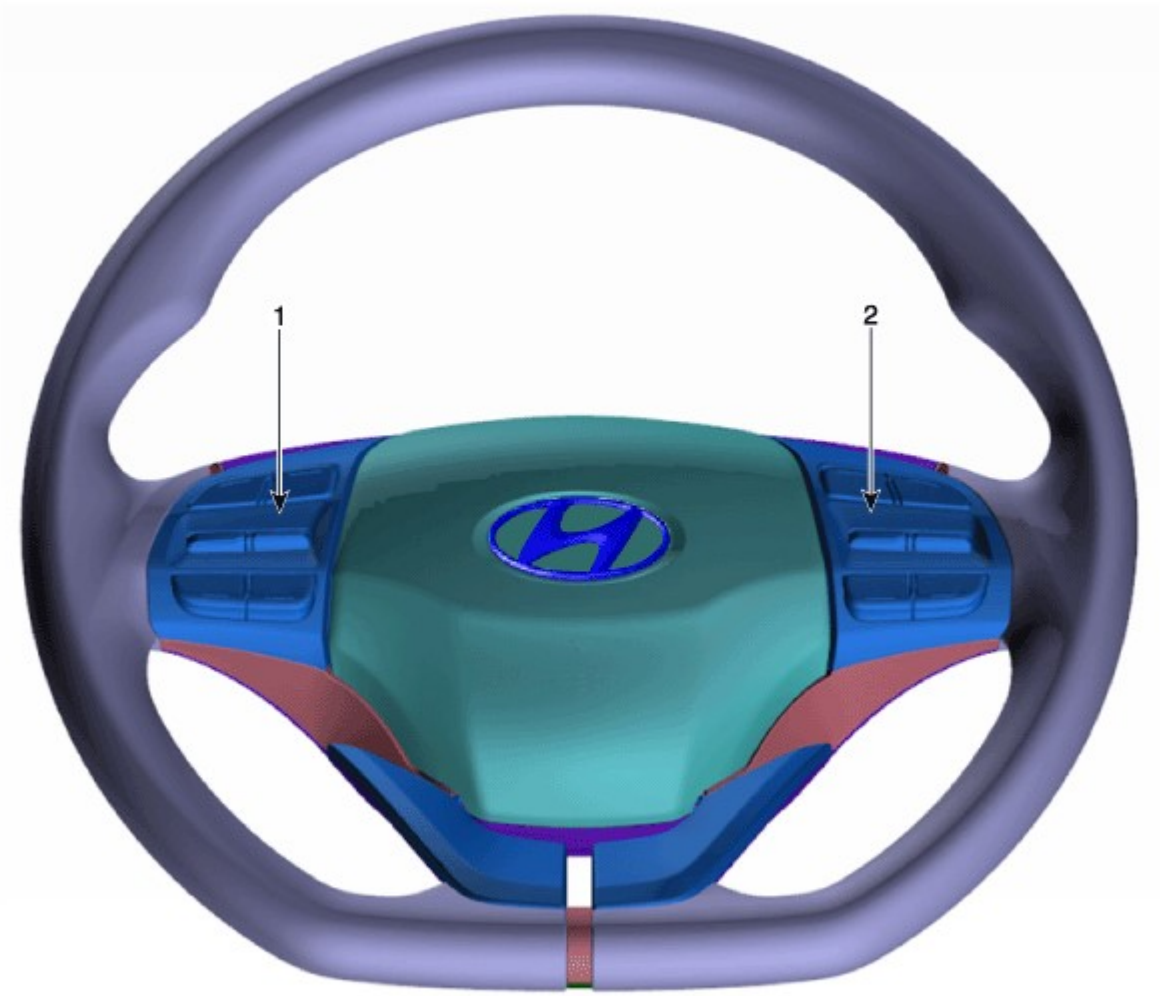

1. Remote control switch (Audio swtich)
2. Remote control switch (Cruise control switch)

Circuit Diagram

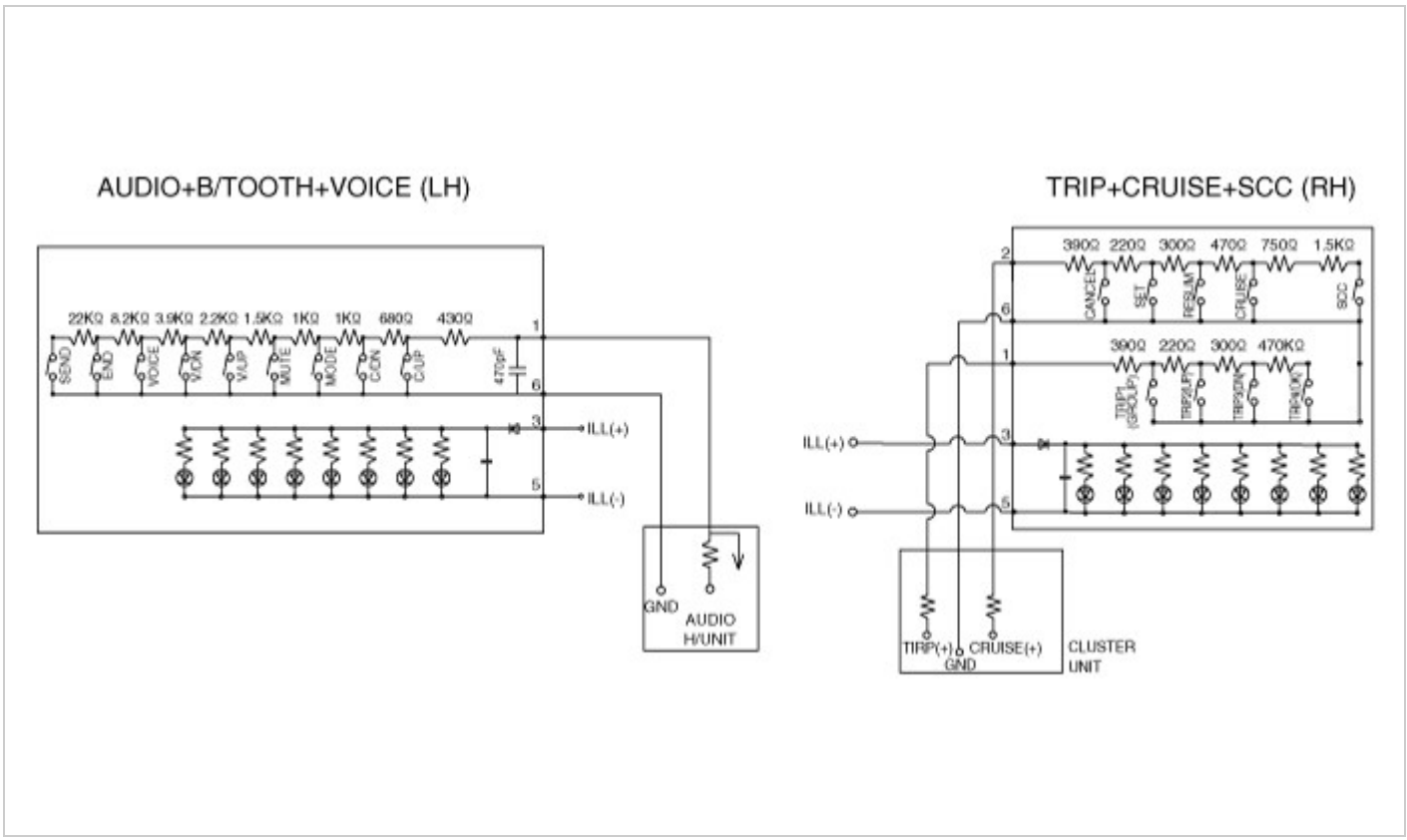
AUDIO+B/TOOTH+VOICE (LH)
22KΩ 8.2KΩ 3.9KΩ 2.2KΩ 1.5KΩ 1KΩ 1KΩ 680Ω 430Ω
SEND
END
VOICE
V.ON
V.UP
MUTE
MODE
C.ON
C.UP
470pF
ILL(+)
ILL(-)
GND
AUDIO
H/UNIT
TRIP+CRUISE+SCC (RH)
390Ω 220Ω 300Ω 470Ω 750Ω 1.5KΩ
CANCEL
SET
RESUM
CRUISE
SCC
390Ω 220Ω 300Ω 470KΩ
TRIP1 (GROUP)
TRIP2(UP)
TRIP3(DN)
TRIP4(OK)
ILL(+)
ILL(-)
TIRIP(+)
CRUISE(+)
GND
CLUSTER
UNIT

[Trip + Cruise]

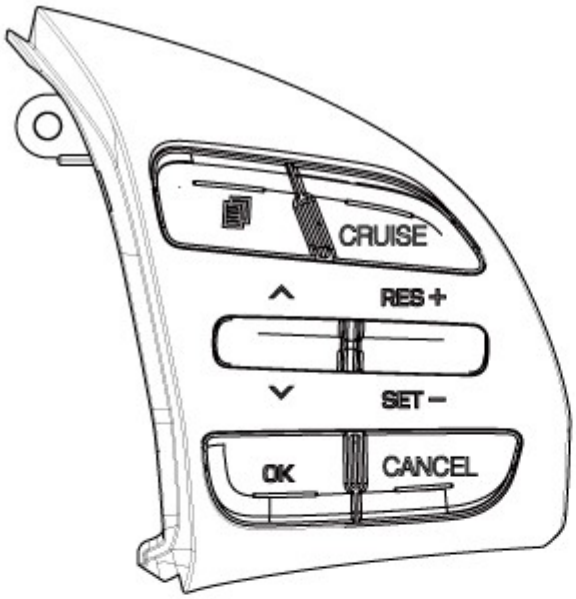

Connector	
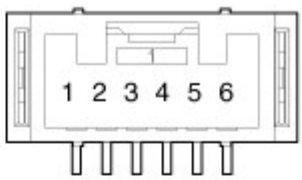	
NO	Description
1	Trip switch (+)
2	Cruise switch (+)
3	Illumination (+)
4	-
5	Illumination (-)
6	Trip switch (-)

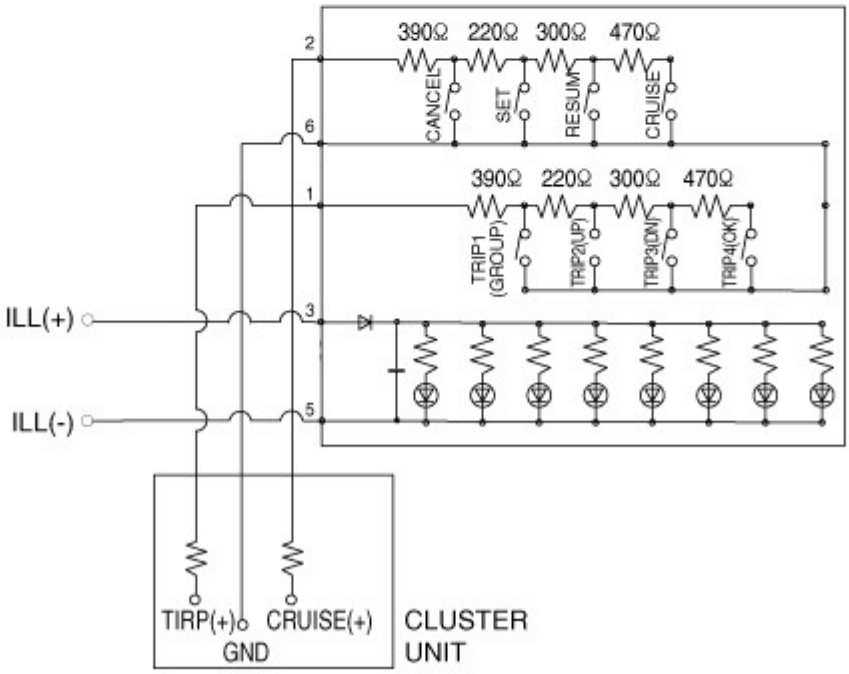

Engine Electrical System

Removal

1. Disconnect the negative (-) battery terminal.
2. Remove the steering wheel assembly.
   (Refer to Steering System - "Steering Wheel")
3. Remove the steering back cover (A).

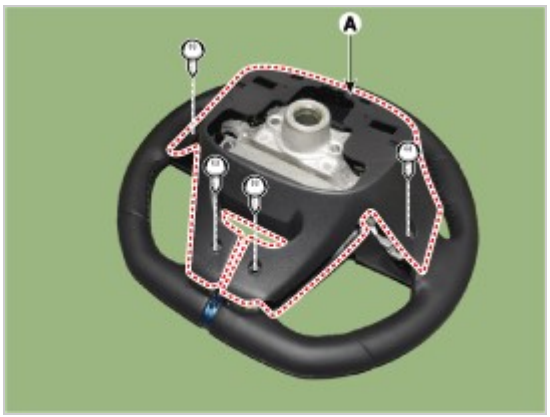

4. Remove the steering remote control connector (A).

5. Remove the steering remote control (A), after loosening the screws.

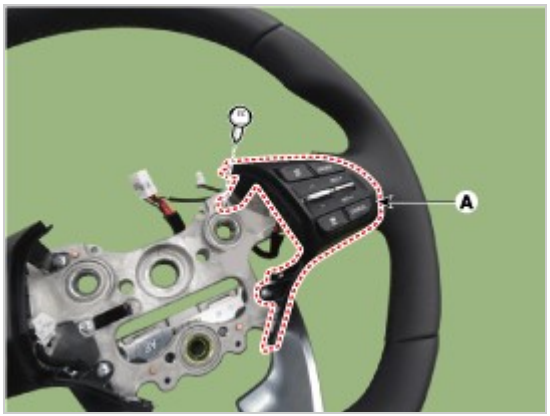

Installation

1. Install the steering wheel remote control after connecting the connector.
2. Connect the negative (-) battery terminal.

Inspection

1. Remove the cruise control switch.

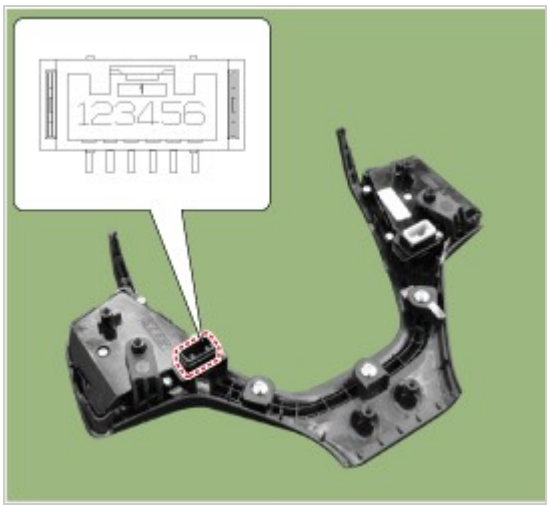

2. Measure resistance between terminals on the control switch when each function switch is ON (switch is depressed).

Function switch	Terminal	Resistance (± 5%)
CANCEL	2 - 3	330 Ω
SET (-)	2 - 3	550 Ω
RES (+)	2 - 3	880 Ω
CRUISE	2 - 3	1.4k Ω

3. If not within specification, replace switch.

Engine Electrical System

General Safety Information and Caution

Be careful of the following precautions when driving the vehicle using the smart cruise control system.

⚠ CAUTION

- The smart cruise control system may have limits in detecting distance to the vehicle ahead due to road and traffic conditions.
- On curves or inclines/declines

– On curves or inclines/declines, the smart cruise control system may not detect a moving vehicle in your lane, and then your vehicle may accelerate to the set speed directly. Also, the vehicle speed may slow down abruptly when the vehicle ahead is recognized. Select the appropriate set speed on curves or inclines/declines and control the vehicle speed by applying the brake pedal if necessary.

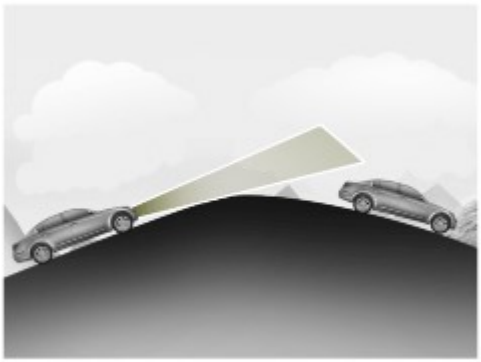

– Your vehicle speed can be reduced due to a vehicle in the adjacent lane. Apply the accelerator pedal and select the appropriate set speed. Make sure that the road conditions permit.

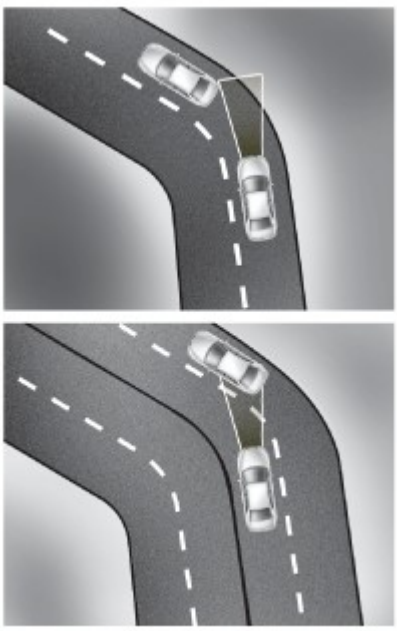

- Lane changing

– A vehicle which moves into your lane from an adjacent lane cannot be recognized by the sensor until it is in the sensor"s detection range.

– Always be cautious because a vehicle which suddenly moves into your lane can be recognizedbelatedly by the sensor.

– If the vehicle which moves into your lane is slower than your vehicle, the speed may decrease to maintain the distance to the approaching vehicle.

– If the vehicle which moves into your lane is faster than your vehicle, your vehicle will maintain the selected speed even though the approaching vehicle is in the sensor"s detection range.

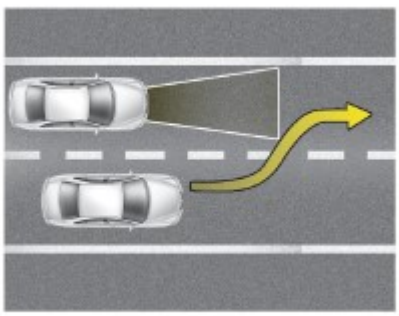

- Vehicle recognition

– Even though a vehicle is in the same lane, a vehicle which is out of the sensor"s detection range cannot be recognized by the sensor.

1) Small vehicles such as motorcycle, bicycle and cultivator
2) A vehicle offset to one side
3) A slow-moving vehicle or suddenly-decelerating vehicle
4) A stopped vehicle
5) A vehicle with small rear profile such as a trailer with no loads

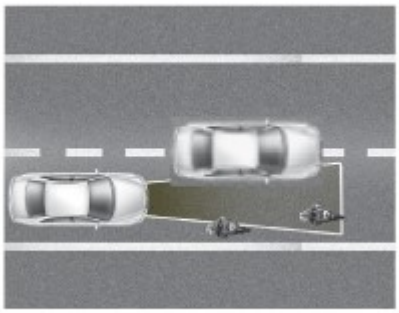

– In this following situation, the front vehicle can"t be recognized correctly so control the vehicle speed by applying the brake pedal or accelerator pedal if necessary.
  1) When the vehicle is pointing upwards due to overloading in the trunk
  2) While making turns by steering
  3) When driving to one side of the lane
  4) When driving on narrow lanes or on curves

- If the smart cruise control is left on (CRUISE indicator light ON), the smart cruise control can be operated accidentally. Keep the smart cruise control system off (CRUISE indicator light OFF) when the smart cruise control is not in use, to avoid the system inadvertently setting a speed speed.
- Observe a regulation speed on road when setting the cruise speed.
- Use the smart cruise control system only when traveling on open highways in good weather. Do not use the smart cruise control when it may not be safe to keep the car at a constant speed, for instance, driving in heavy or varying traffic, or on slippery (rainy, icy or snow-covered) or winding roads or over 6% up-hill or down-hill roads.
- Pay particular attention to the driving conditions whenever using the smart cruise control system.
- The vehicle cannot be stopped by using the smart cruise control system. If emergency stop is necessary, you should apply the brakes.
- Keep the safety distance according to road conditions and vehicle speed. If the distance to the following vehicle is too narrow during high-speed driving, it is dangerous.
- The smart cruise control system cannot recognize a stopped vehicle, pedestrians or an oncoming vehicle. Always look ahead cautiously to prevent unexpected and sudden situations from occurring.
- The smart cruise control system is not a substitute for safe driving practices but a supplementary function only. It is the responsibility of the driver to always check the speed and the distance to the vehicle ahead.
- In front of you, vehicles which frequently change lanes may cause a delay in the system"s reaction or may cause the system to react to a vehicle actually in adjacent lane. Always look ahead cautiously to prevent unexpected and sudden situations from occurring.
- Your vehicle may accelerate when a vehicle ahead of you disappears. When you are warned that the vehicle ahead of you is not detected, drive with caution.

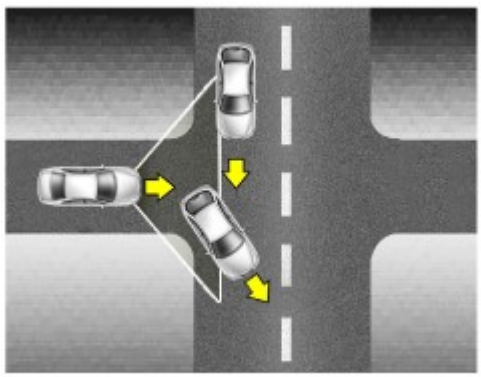

- When vehicles are at a standstill and the vehicle in front of you changes to the next lane, be careful when your vehicle starts to move because it may not recognize the stopped vehicle in front of you.

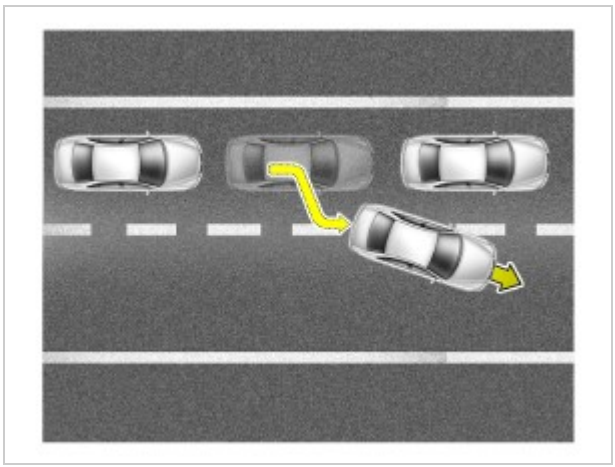

- Always look out for pedestrians when your vehicle is maintaining a distance with the vehicle ahead.

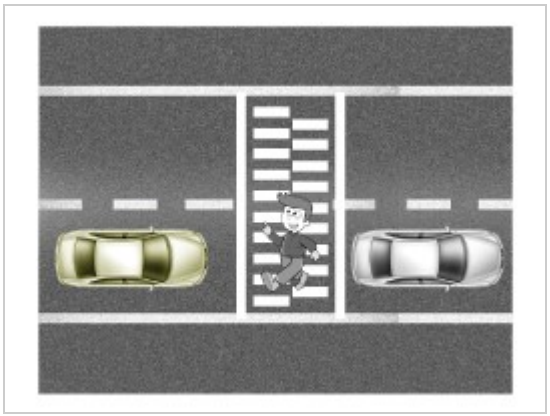

- Always be cautious for vehicles with higher height or vehicles carrying loads that stick out to the back of the vehicle.

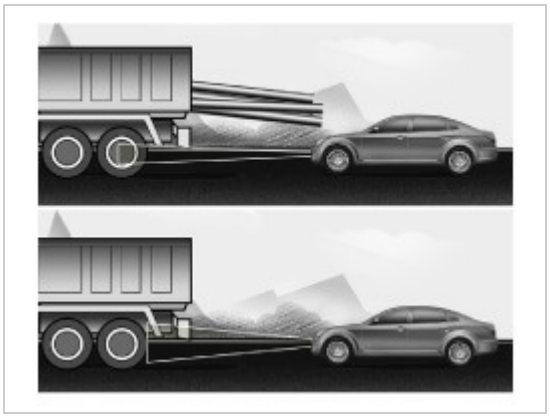

Trouble Symptom Charts

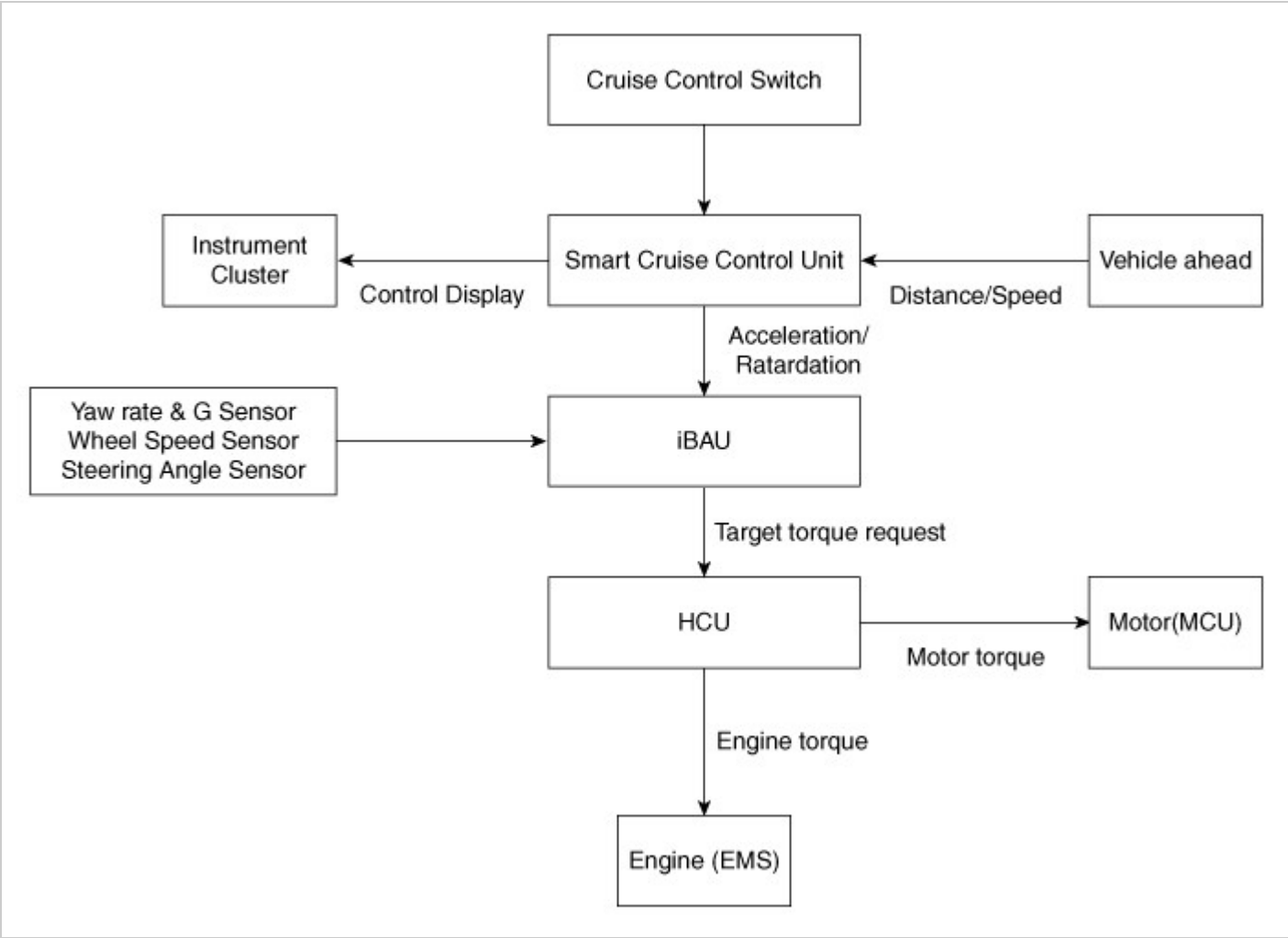

Component Parts and Function Outline

Component Part	Function
Cruise Control Switch	Input the set speed and distance to the SCC ECU.
Instrument Cluster	Display various information inputted from SCC.
Smart Cruise Control Unit	Automatic braking and request the engine torque control to the engine (ECM) Request the EPB torque control to the Electronic Parking Brake (EPB) Request the stop lamp indicator ON
IBAU	It requests the target torque to the HCU.
HCU	The allocation of the target torque, the engine torque and the motor torque.
Engine (ECM)	Control the Engine torque.
Motor (MCU)	Control the Motor torque.

Engine Electrical System

Description

The smart cruise control system allows a driver to program the vehicle to control the speed and following distance by detecting the vehicle ahead without depressing the brake pedal and the accelerator pedal.

1. Cruise speed control : The vehicle maintains the selected speed if there are not vehicles ahead.
2. Retardation control : The vehicle decelerates if a vehicle ahead is detected.
3. Following distance control : The vehicle maintains the selected following distance.
4. Acceleration control : The vehicle accelerates to the selected speed if a vehicle ahead is not detected.
5. Congested area control : In traffic, your vehicle will stop if the vehicle ahead of you stops. Also, if the vehicle ahead of you starts moving, your vehicle will start as well. However, if the vehicle stops for more than 3 seconds, you must depress the accelerator pedal or push the RES+ switch to start driving.

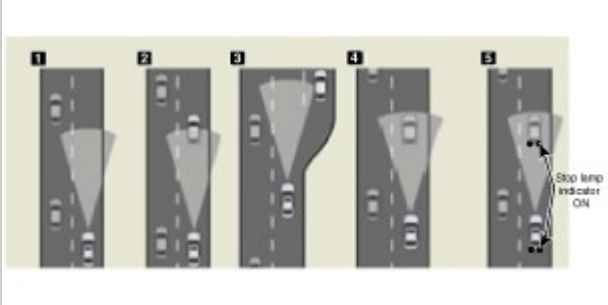

6. Control and function on curves
   (1) The sensor may not detect a vehicle ahead or may detect a vehicle on other lanes because the detection range of the sensor is limited.
   (2) On curves, if the vehicle equipped with the SCC is set to drive at high speed, it can skid sideways. This means that the speed may be reduced even with no vehicle ahead (No brake control by the SCC).
   (3) While the vehicle follows a vehicle ahead on straight road, if a vehicle ahead enters curves, the vehicle equipped with the SCC may accelerate to follow the target speed.
   (4) On curves, if a vehicle ahead followed is out of the detection range, the vehicle does not accelerate to the set speed and maintain the following speed to prevent accelerating and decelerating repeatedly. (If the vehicle equipped the SCC changes the lane or apply the accelerator pedal, the vehicle will accelerate.)

7. Warning alarm
   If the vehicle equipped the SCC decelerates because a vehicle ahead decelerates or moves into your lane, the warning will be issued.
   (1) In case that the vehicle equipped with SCC is able to decelerate properly by the system - No warning
   (2) In case that the vehicle equipped with SCC is not able to decelerate properly by the system
      – Indicator in the cluster will blink and the warning buzzer will go off. (The warning and deceleration by the system will go on until the brake pedal is applied.)
   (3) If the vehicle ahead (vehicle speed : less than 30km/h) disappears to the next lane during following distance control, the warning chime will go off and a message will appear. Adjust the vehicle speed to avoid crashes into other vehicles or objects which may suddenly appear in front of you.

8. Accelerating by driver
   Even though the vehicle is being decelerated by the SCC system, the vehicle can be accelerated by applying the accelerator pedal. If the vehicle accelerates over the set speed, the indicator in the cluster will blink.

NOTICE

- Smart cruise control operating conditions

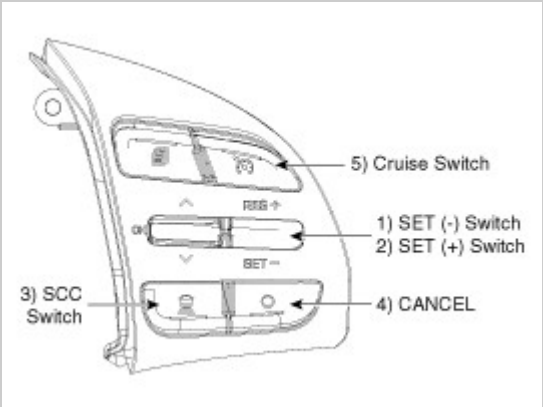

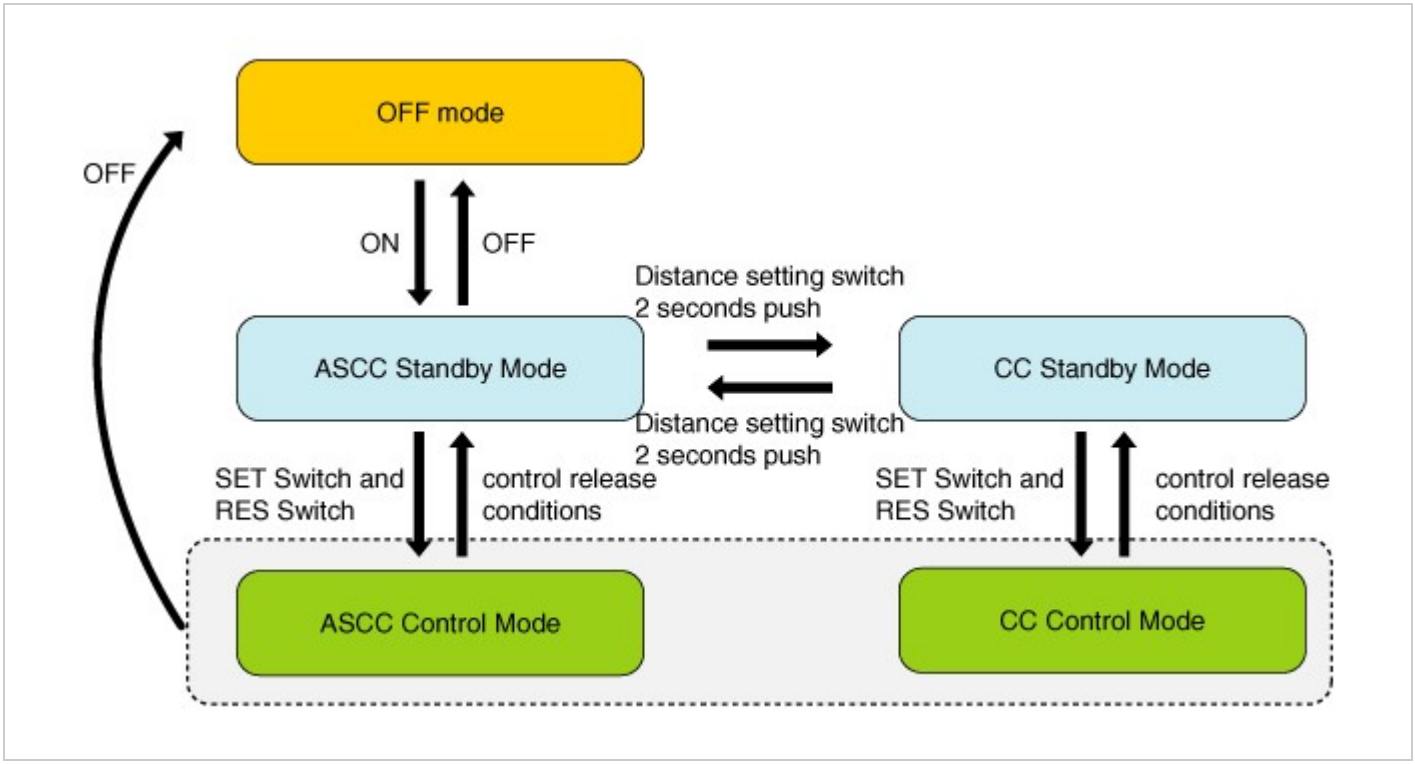

– Vehicle speed at approximately 0-180km/h (0-111.8mph)
– Transmission in D or Sports mode
– "ESP OFF" switch OFF
– "ESP OFF" switch OFF
– "CRUISE" switch ON (CRUISE indicator ON)

Under the above conditions, activate the cruise system using the "SET/–" or "RES/+" switch.

• Smart cruise control disabling conditions
– "CRUISE" switch OFF
– "CANCLE" switch ON
– Brake pedal applied
– Driver"s door open
– Vehicle speed at more than approximately 180km/h (110mph)
– Stopped at steep slope
– Continued SCC stop for more than 5 min
– Repetitive SCC stop & go for long time
– When you try to start the vehicle after a vehicle ahead stops far away from your vehicle during SCC auto stop
– Transmission in N or P or R
– ESP/ TCS / ABS operating
– An accelerator pedal applied for more than 60 sec
– ESP OFF" switch ON (ESP OFF indicator ON)
– Parking brake applied
– System failure (The warning indicator ON)
– Crack, damage or wrong installation of smart cruise control unit cover (The warning indicator ON)

9. Function of cruise control
The driver may choose to only use the cruise control mode (speed control function) by doing as follows:
With the smart cruise control system ON (the cruise indicator light will be on but the system will not be activated), push the distance to distance switch for more than 2 seconds. "Smart cruise control (SCC) mode" and "Cruise control (CC) mode" can be selected.The speed control of the cruise control mode is the same as that of the smart cruise control mode.
When using the cruise control mode, the driver must manually adjust the distance to other vehicles as the system will not automatically brake to slow down for other vehicles.

Cruise main Switch (CRUISE)

The smart cruise control system is engaged by pressing the cruise "ON/OFF" main switch. When the smart cruise control system is engaged, the CRUISE indicator in the cluster illuminates.

Set/Coast Switch (SET/–)

The "SET/–" switch located on the right side of the steering wheel column has two functions.

The set function - Push the "SET/–" switch and release it at the desired speed. The SET indicator light in the instrument cluster will illuminate. Release the accelerator pedal. The desired speed will automatically be maintained.

At low speed of 0 - 30 km/h (0 - 20 mph), there should be a vehicle in front of driver"s vehicle with a distance of 2 - 15 m (6.6 - 49.2 ft). The target speed is set at 30km/h (20 mph).

The coast function - Push the "SET/–" switch and hold it when the smart cruise control is on. The vehicle will gradually slow down. Release the switch at the desired speed.

The desired speed will be maintained.Push the "SET/–" switch and release it quickly.

The cruising speed will decrease by 1.0km/h or 1.0mph.

NOTICE

- If the vehicle speed is above the set speed by applying the accelerator pedal, the vehicle speed will be the set speed.

Resume/Accel Switch (RES/+)

The "RES/+" switch located on the right side of the steering wheel column has two functions.

The resume function - If any method other than the cruise "ON/OFF" main switch was used to cancel cruising speed temporarily and the system is still activated, the most recent set speed will automatically resume when the "RES/+" switch is pushed.

The accel function - Push the "RES/+" switch and hold it when the smart cruise control is on. The vehicle will gradually accelerate. Release the switch at the desired speed. The desired speed will be maintained.

Push the "RES/+" switch and release it quickly. The cruising speed will increase by 1.0km/h or 1.0mph.

Cancel Switch (CANCEL)

The cruise control system is temporarily disengaged by pushing the "CANCEL" switch.

Following Distance Control Switch

This system helps you set the distance from the vehicle ahead and maintain the selected distance even if you did not push the accelerator or the brake pedal.

Select the appropriate following distance according to road conditions and vehicle speed.

Each time the button is pressed, the following distance changes as follows :

Ex) Distance 4 → Distance 3 → Distance 2 → Distance 1→ Distance 4

If you drive at 90 km/h (55.9mph), the distance maintain as follows;

Distance 4 - approximately 52.5m (172.2ft)

Distance 3 - approximately 40m (131.2ft)

Distance 2 - approximately 30m (98.4ft)

Distance 1 - approximately 25m (82.0ft)

The following distance of each stage changes according to the speed of the vehicle ahead.

Display in the Cluster

Display	Description
	Distance 1 - with a vehicle ahead
	Distance 2 - with a vehicle ahead
	Distance 3 - with a vehicle ahead
	Distance 4 - with a vehicle ahead

	SCC rader malfunction

Engine Electrical System

Description

The smart cruise control unit is installed on the front right side of the chassis. A radar sensor is embedded in the front section of the unit. This sensor detects vehicles and objects in front of the vehicle.The radar sensor can detect up to 64 objects ahead of a vehicle. The alarm goes off when the vehicle deviates from the horizontal and vertical alignment reference points during operation. This sensor communicates with the dashboard, warning buzzer, smart cruise control switch, Electronic Stability Program (ESP), ECM, and TCM via CAN communication.The sensor controls vehicle speed through CAN communication between the Electronic Stability Program (ESP) system and the ECM and TCM.

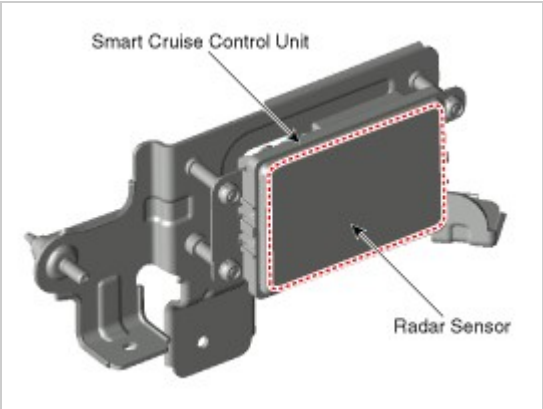

Engine Electrical System

Specification

Item	Specification
Power supply (V)	12
Operation voltage (V)	9 - 16

Engine Electrical System

Circuit Diagram

[Circuit Diagram]

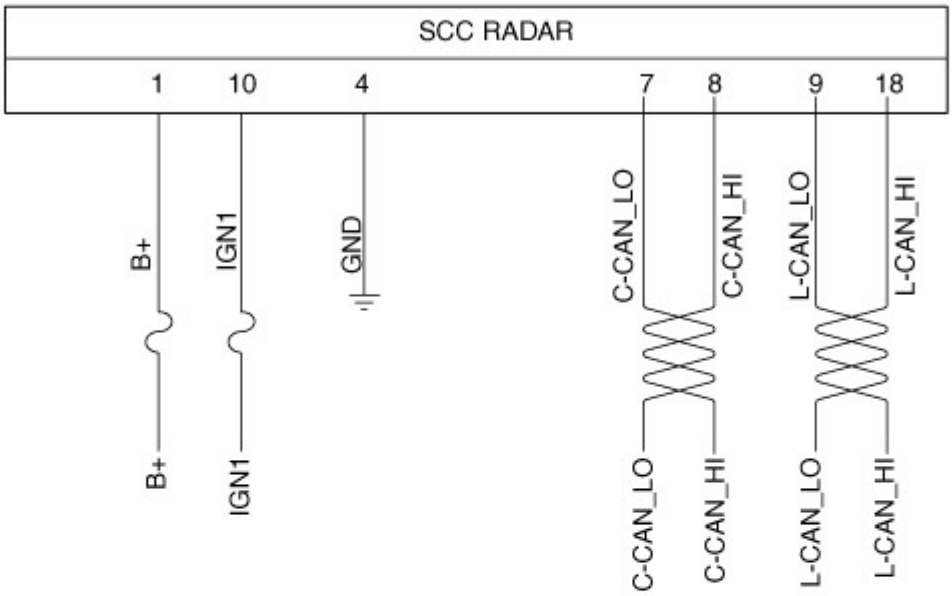

[Connector]

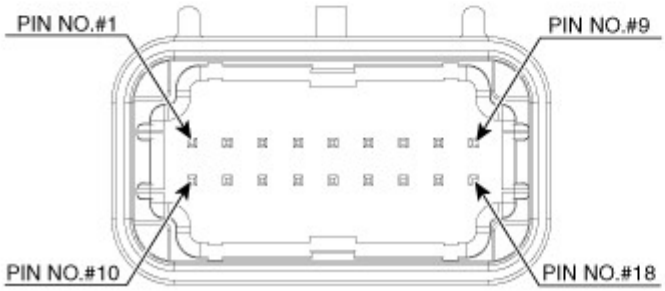

No	ITEM
1	Battery Power (B+)
4	Ground
7	C-CAN [Low]
8	C-CAN [High]
9	L-CAN [Low]
10	IGN1
18	L-CAN [High]

Removal

1. Remove the front bumper.
   (Refer to Body - "Front Bumper")
2. Disconnect the smart cruise control unit connector (A).
3. Remove the smart cruise control nuit assembly (B) from thevehicle after loosening mounting bolts.

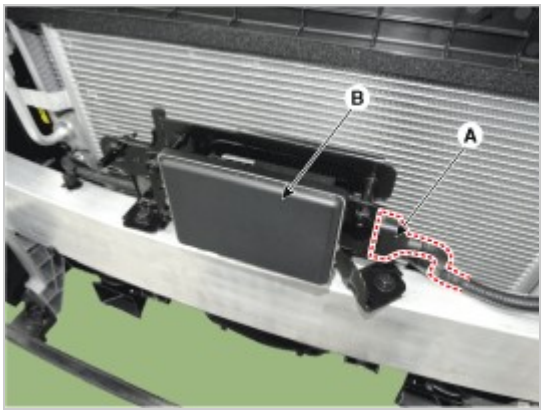

Installation

1. Install in the reverse order of removal.

CAUTION

- When installing the sensor, align the direction of sensor with the vehicle motion vector and adjust the upside of sensor horizontally using level meter (A).

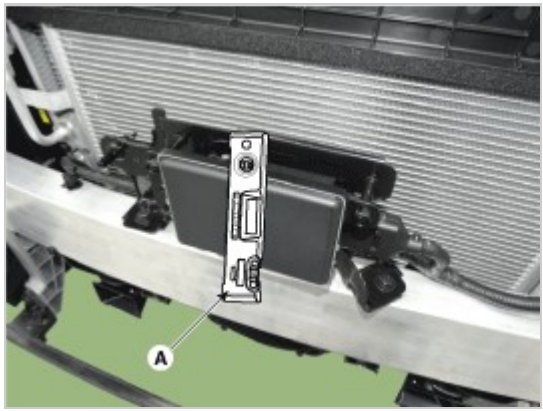

1. Align the smart cruise control sensor.
   (Refer to "Smart Cruise Control Sensor Alignment")
2. Install the bumper cover.
   (Refer to Body - "Front Bumper Cover")

Smart Cruise Control (SCC) Sensor Alignment

The objective of the alignment is to ensure correct SCC performance. In order for the sensor to perform properly, the sensor must be aligned precisely. The sensor alignment has major impact on road estimation, lane prediction, and target processing. When the sensor is misaligned, the performance of SCC cannot be guaranteed. Therefore, if the sensor needs to be reinstalled or a new sensor to be installed on a vehicle, the sensor shall be aligned by service personnel.

NOTICE

The sensor must be aligned when ;

- The sensor is reinstalled after removal.
- A new sensor is installed on a vehicle.
- The sensor or neighboring parts are affected by a collision.
- The sensor can not recognize a vehicle ahead.

⚠ CAUTION

The sensor can not recognize a vehicle ahead.

- Remove heavy objects, such as luggage in the trunk, from the vehicle.
- Check wheel alignment.
- Check the pollution condition of sensor cover

Radar sensor should be aligned in vertical and horizontal direction. Vertical alignment should be performed using level/tilt meter and horizontal alignment should be performed by driving on a road.

1. To maintain the horizontal condition between a vehicle and ground, park a vehicle on a lift or level ground.
2. Remove the bumper cover.
   (Refer to Body - "Front Bumper Cover")
3. Check out the vertical alignment of sensor using a level/tilt meter. (Tolerance : ±1.2° less)
   If verticality of the sensor is out of the tolerance, turn the adjustment screw (B) to adjust it within the tolerance.

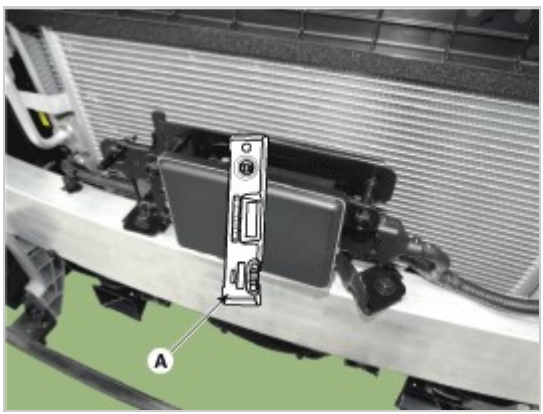

NOTICE

- For the vertical sensor alignment, use a digital tilt meter for better accuracy. If not available, a bubble meter can be used.

4. Install the bumper cover.
   (Refer to Body - "Front Bumper Cover")
5. To perform the horizontal sensor alignment, connect GDS after starting the engine and choose "SCC Alignment"

NOTICE

- Erase the DTC code before the sensor alignment procedure.

6. Select "Driving Mode" to start sensor alignment.

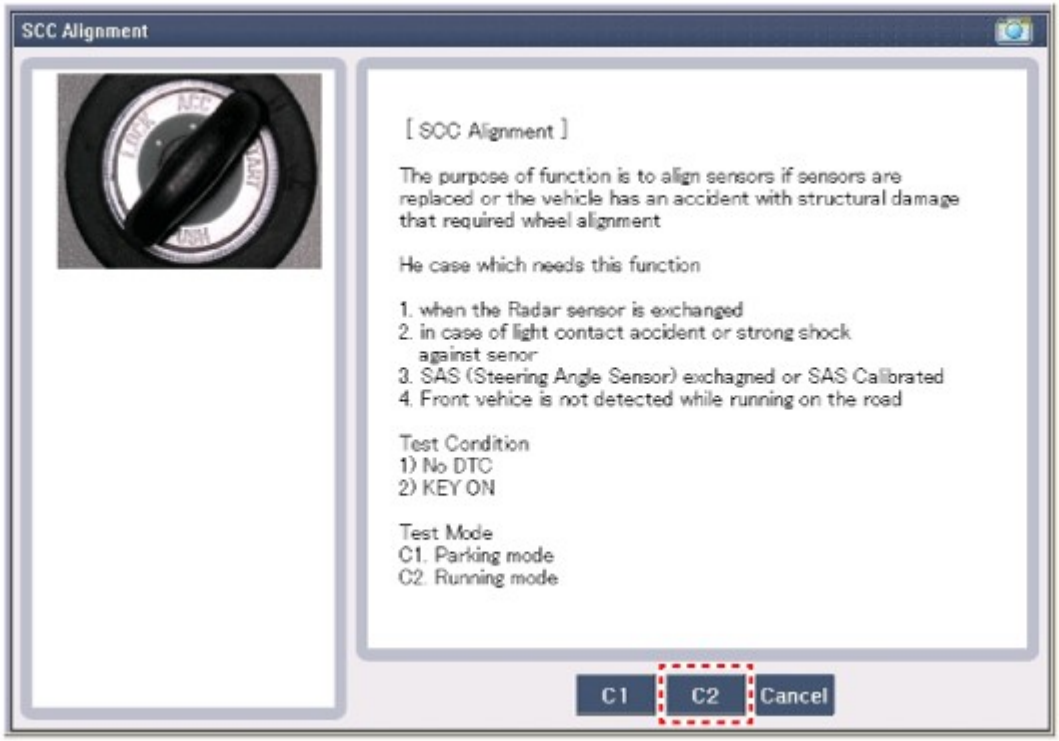

7. Drive the vehicle after the alignment is initiated on the GDS. Check the red light of instrument cluster is on.

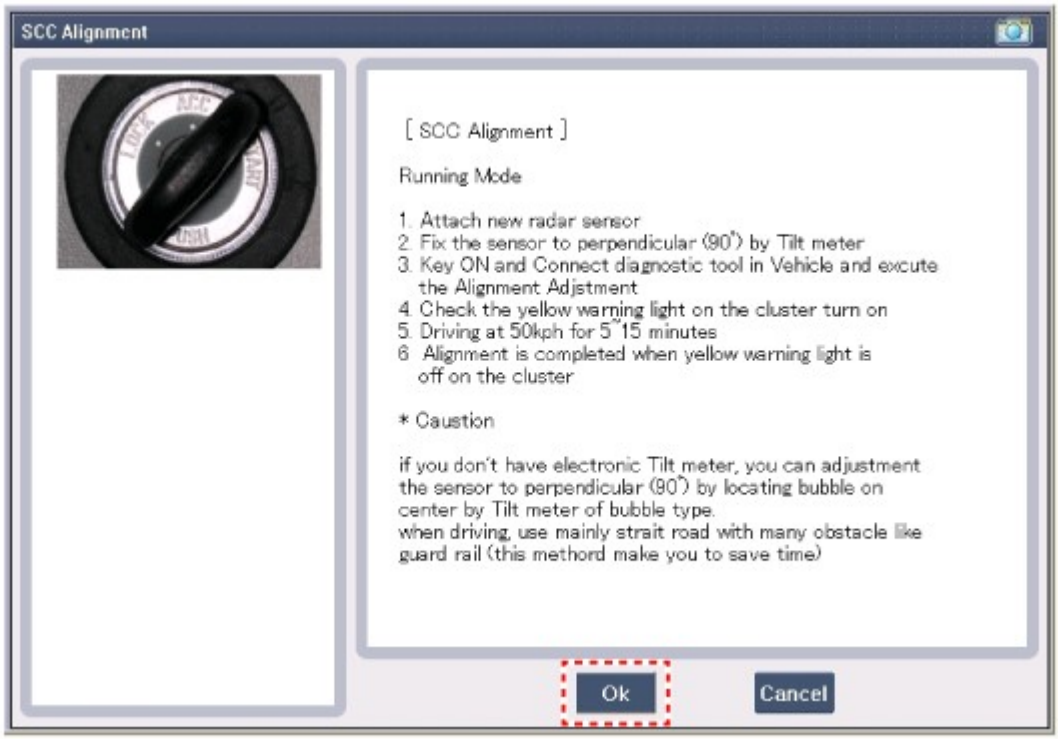

NOTICE

The sensor alignment will last about 5-15minutes. Depending on the traffic situation or road condition, the duration of the procedure can shorten or extend.

To complete the alignment in minimum time, if it is possible, drive the vehicle considering the driving/road conditions as follows.

- To shorten the duration of the alignment;
  - Drive at more than 65km/h (40.4mph).
  - Drive on a straight road without any curve and incline.

– Drive on a thick and wide asphalt road.
– Drive on a road with repetitive static targets.
– Drive on a dry road in good condition without rain or snow on it.

- The alignment process can be interrupted when any of the following conditions exists;

– When the vehicle encounters a curve with a radius smaller than 100m (328.0ft).
– Drive below minimum required speed or stop (waiting at a red light, etc.)
– When the vehicle is in a tunnel or under overpass.
– When there are excessive steering wheel actions such as turning to the right or left and sudden lane change.
– Drive on a road with few repetitive static targets.

⚠ CAUTION

When driving the vehicle for sensor alignment, be careful of the following;

- Observe a speed regulation on the road.
- Do not stick to the previous driving/road conditions excessively to shorten the duration of the alignment. Drive the vehicle safely considering traffic situations.
- When driving the vehicle, do not operate the GDS and look at the GDS display for a long time. You can lose your focus on steering control.
- Operate the GDS only when the vehicle stops.

8. After the sensor alignment is completed, the instrument cluster warning light goes off.

NOTICE

- If sensor alignment has not completed, check horizontal angle using GDS.
- If the vertical angle of the sensor is out of ±3°, check the back beam or mounting area. If there is no abnormality, replace the SCC unit with a new one.
- After replacing the SCC unit with a new one, align the sensor again.

Components

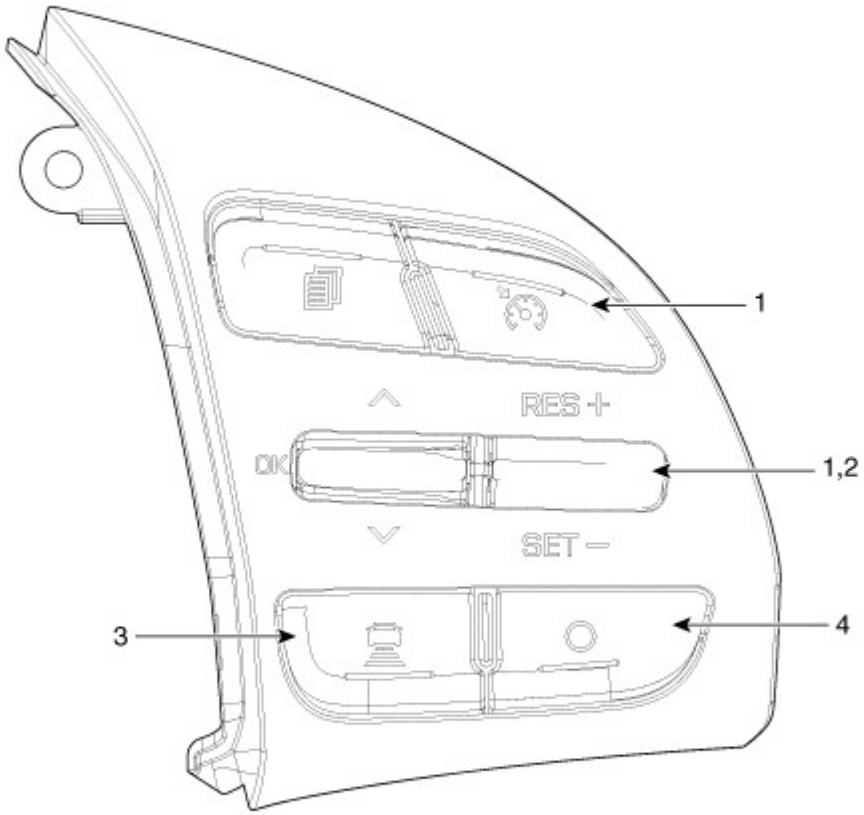

1. SET - switch
2. RES + switch
3. Distance setting switch
4. CANCEL switch
5. CRUISE switch

Circuit Diagram

[Curise + SCC]

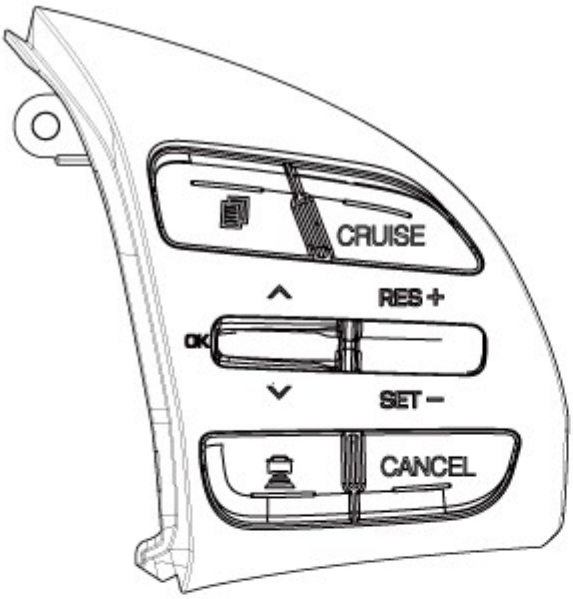

Connector	
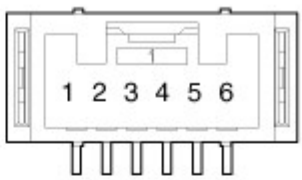	
NO	Description
1	Trip switch (+)
2	SCC/Cruise switch (+)
3	Illumination (+)
4	-
5	Illumination (-)
6	Trip switch (-)

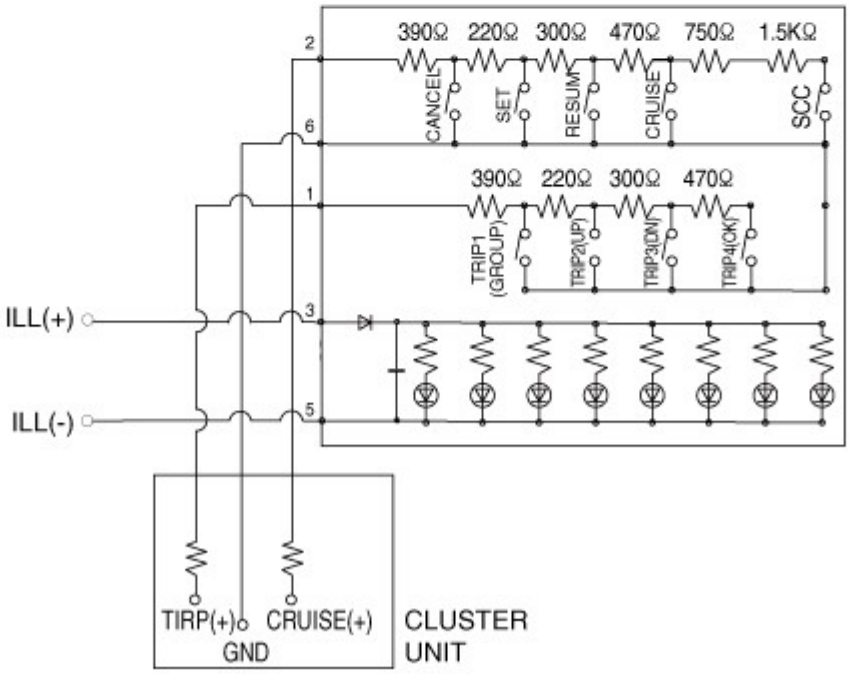

Engine Electrical System

Removal

1. Disconnect the negative (-) battery terminal.
2. Remove the steering wheel assembly.
   (Refer to Steering System -"Steering Wheel")
3. Remove the steering back cover (A).

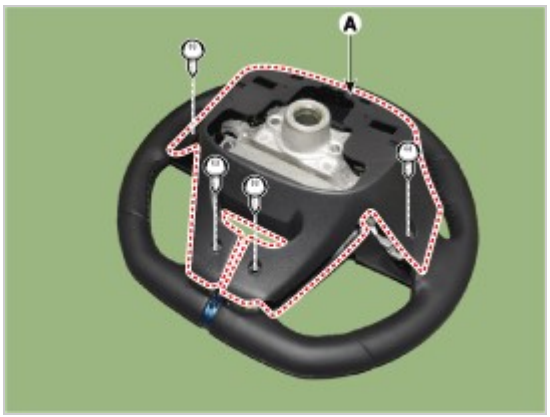

4. Remove the steering remote control connector (A).

5. Remove the steering remote control (A), after loosening the screws.

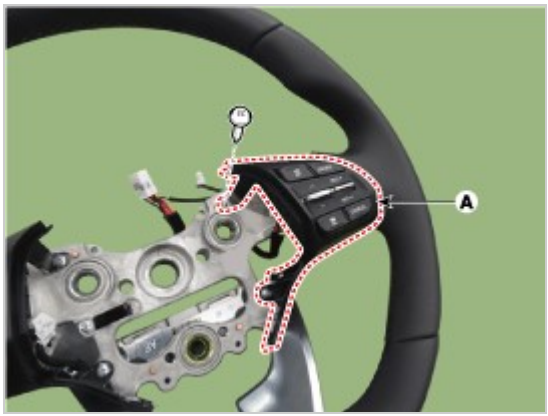

Installation

1. Install the steering wheel remote control after connecting the connector.
2. Connect the negative (-) battery terminal.

Inspection

1. Remove the cruise control switch.

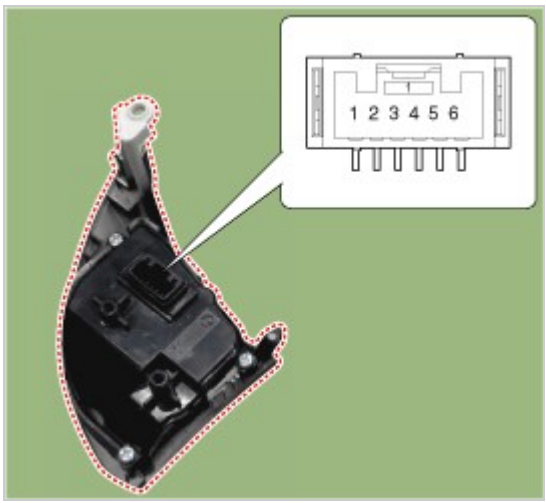

2. Measure resistance between terminals on the control switch when each function switch is ON (switch is depressed).

Function switch	Terminal	Resistance (± 5%)
CANCEL	2 - 3	330 Ω
SET (-)	2 - 3	550 Ω
RES (+)	2 - 3	880 Ω
CRUISE	2 - 3	1.44 kΩ
SCC	3 - 5	5.54 kΩ

3. If not within specification, replace switch.