Safety Precaution

Precautions to take before servicing high voltage system

DANGER

- Since hybrid vehicles contain a high voltage battery, if the high voltage system or vehicles are handled incorrectly, this might lead to a serious accidents like electric shock and electric leakage.

WARNING

- Be sure to shut off the high voltage by removing the safety plug before performing inspection or repairing the high voltage system.
  (Refer to "High Voltage Shut-off Procedures")
- The responsible worker keeps the removed safety plug to prevent the plug from being connected by mistake.
- Do not keep any metal objects (watch, ring etc.) while working on the high voltage system, which it can cause serious accidents like electric shock.
- Before beginning work on the high voltage system, the worker should wear personal protective equipment to prevent safety accidents.
  (Refer to "Personal Protective Equipment")
- Never allow workers who are not wear personal protective equipment to touch the high voltage system. High voltage components should be covered with an insulation sheet to prevent safety accidents.
- Use insulation tools when working on the high voltage system.
- Put the removed high voltage components on the insulation mat.

Information

- All the high voltage wiring and connectors are orange.
- A caution label for high voltage is attached to the high voltage components.
- High voltage components :
  High Voltage Battery Pack Assembly, Power Relay Assembly (PRA), BMS ECU, Hybrid Power Control Unit (HPCU), Hybrid Drive Motor, HSG, Electric A/C Compressor, Low DC/DC Converter (LDC), Power Cable, Electric Compressor etc.

CAUTION

- Inform of danger of high voltage by putting the "high voltage caution" on the vehicle as image below.

SAMPLE

DANGER

High Voltage : Do not touch during operation.

Person in charge : _____

Copy this page and put it after folding on the roof of the vehicle in service.

DANGER

High Voltage : Do not touch during operation.

Person in charge : _____

Personal Protective Equipment

Name	Illustration	Description
Insulation glove		Used when inspecting or working on the high voltage components [Insulation performance : 1000V / 300A or above]
Insulation shoes		Used when inspecting or working on the high voltage components

Insulation clothes		Used in the case below • During Removal & installation or inspection of the high voltage battery terminals or wiring, which spark might happen. • During working on the high voltage battery pack assembly.
Insulation helmet	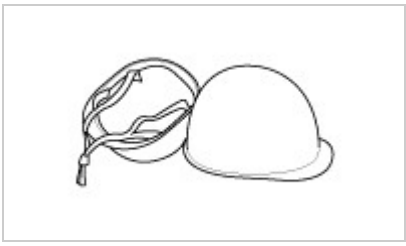	
Safety glasses		
Face shield		
Insulation mat	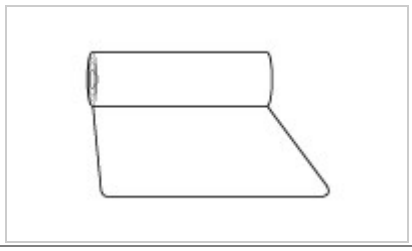	Putting the removed high voltage components on the insulation mat to prevent safety accidents.
Insulation sheet	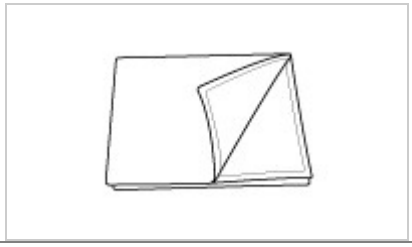	Covering the high voltage components with insulation sheet to prevent people who don’t wear the personal protective equipment from safety accidents.

Precautions to take when handling power cable

- Immediately insulate the high voltage terminal after reconnecting the terminal (use insulation tape).
- Tighten the high voltage terminal screw to spec torque.
- Be careful that (+) and (-) terminals do not come in contact when connecting or disconnecting power cable and busbar.

Precautions to take when handling high voltage battery

- When transporting high voltage battery, be sure to keep it flat and leveled. Failure to do so may decrease the battery performance and/or its life-span.
- High voltage battery"s performance may decrease if it is exposed to high temperature for a lengthy period. As a result, heat-treatment after painting must not exceed 70°C/ 30 minutes, or 80°C/ 20 minutes.

Precautions in case of fire on high voltage battery system

- If the fire occurs indoor, ventilate the area to let out hydrogen gas.
- ACB fire extinguisher is recommended for putting out the fire. (water may also be used).

Precautions in case of high voltage battery gas or electrolyte leakage

-

Turn OFF the Start button. Keep the Smart Key at least 2 meters away from the vehicle to prevent unintended engine start.

- Gas is hydrogen and alkaline vapor. If the leakage is indoor, ventilate the area immediately and evacuate to a safe location.
- If the leaked liquid comes in contact with skin, immediately neutralize the affected area with boric acid solution, then clean with tap water or saline solution.
- If the leaked vapor or liquid gets in the eye, immediately clean the affected eye with water then get medical attention.
- If the gas leakage is caused by high temperature, then do NOT use the battery until the high voltage battery fully cools down to room temperature.

Precautions when handling the vehicle after an accident

- Be sure to wear insulated gloves (or rubber gloves), protective goggles, insulated suite, and insulated boots.
- Do NOT touch bare cable under any condition.
  (Refer to "Precautions when handling power cable")
- In case of vehicle fire, put out the fire with ABC extinguisher. Do NOT use water (usage of large volume of water is okay, but small volume can worsen the situation).
- If more than half of the vehicle is submerged, then do NOT go near the Safety Switch or other high voltage related components. If such a component must be accessed, then move the vehicle to the safe location first before handling the component.
- Gas is hydrogen and alkaline vapor. If the leakage is indoor, ventilate the area immediately and evacuate to a safe location.
- If the leaked liquid comes in contact with skin, immediately neutralize the affected area with boric acid solution, then clean with tap water or saline solution.
- Refer to "High voltage cut-off procedure" if the high voltage needs to be cut off.

Preparations when servicing the accident vehicle

- Be sure to wear insulated gloves (or rubber gloves), protective goggles, insulated suite, and insulated boots.
- Boric Acid Power or Solution
- ABC Extinguisher
- Towel for cleaning electrolyte
- Vinyl tape (for insulating terminal)
- Mega ohm tester (for checking high voltage)

Precautions in case HEV is left unattended for a lengthy period

- Turn OFF the Start button. Keep the Smart Key at least 2 meters away from the vehicle to prevent unintended engine start.
- We recommend that HEV is driven at least 1 time for over 30 minutes every 2 months to protect and manage the high voltage battery (inquire at relevant team in HMC).
- When inspecting or exchanging the auxiliary battery, check high voltage battery SOC reset related problems.

Hybrid Vehicle Refrigerant Recovery / Charging Precautions

- Since the electric compressor uses high-voltage, you should use POE oil which have high Volumetric Resistivity.
- Do not use the same A/C recovery / charging station as conventional belt-driven compressors.

WARNING

- If the POE oil of the system gets mixed with PAG oil, then dielectric breakdown due to decreased volumetric Resistivity can occur and inoperative A/C compressor may result, A/C compressor may not work

High Voltage Shut-off Procedures

WARNING

- Be sure to read and follow the "General Safety Information and Caution" before doing any work related with the high voltage system. Failure to follow the safety instructions may result in serious electrical injuries.
- Be sure to read and follow the "High Voltage Shut-off Procedures" before doing any work related with the high voltage system. Failure to follow the safety instructions may result in serious electrical injuries.

Information

- High voltage components :
  High Voltage Battery Pack Assembly, Power Relay Assembly (PRA), BMS ECU, Hybrid Power Control Unit (HPCU), Hybrid Drive Motor, HSG, Electric A/C Compressor, Low DC/DC Converter (LDC), Power Cable, Electric Compressor etc.

1. Turn the ignition switch OFF and disconnect the auxiliary 12V battery negative (-) terminal.

2. Remove the safety plug cover (A).

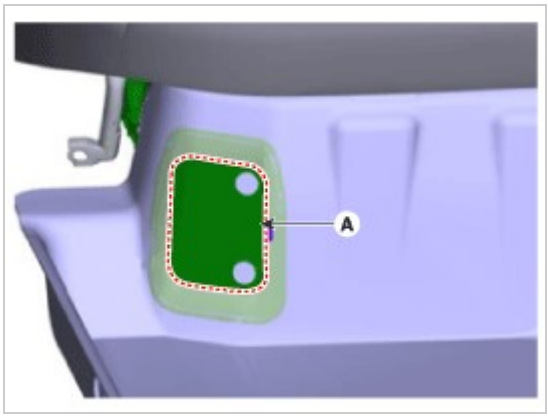

3. Unfasten the hook (A) and then remove the safety plug (C) by pulling the lever (B) to the direction of arrow.

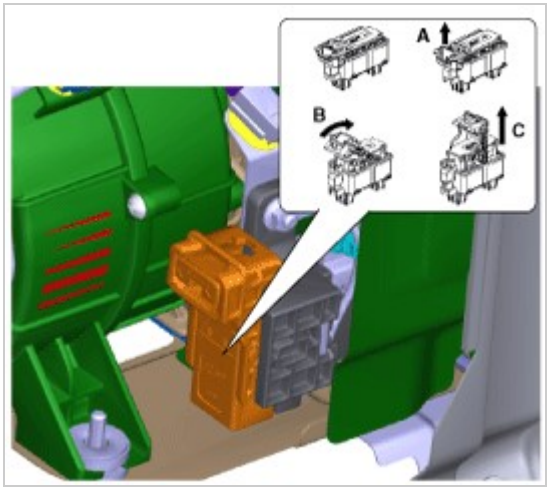

4. Wait for more than 5 minutes so that the capacitor in the high voltage system can be fully discharged.
5. Measure the voltage between the inverter terminals to check that the capacitor in the inverter is discharged completely.
   (1) Remove air cleaner assembly and air duct.
   (Refer to Engine Mechanical System - "Air Cleaner")
   (2) Disconnect the inverter power cable (A).

Information

- Disconnect the inverter power cable as the procedures below.

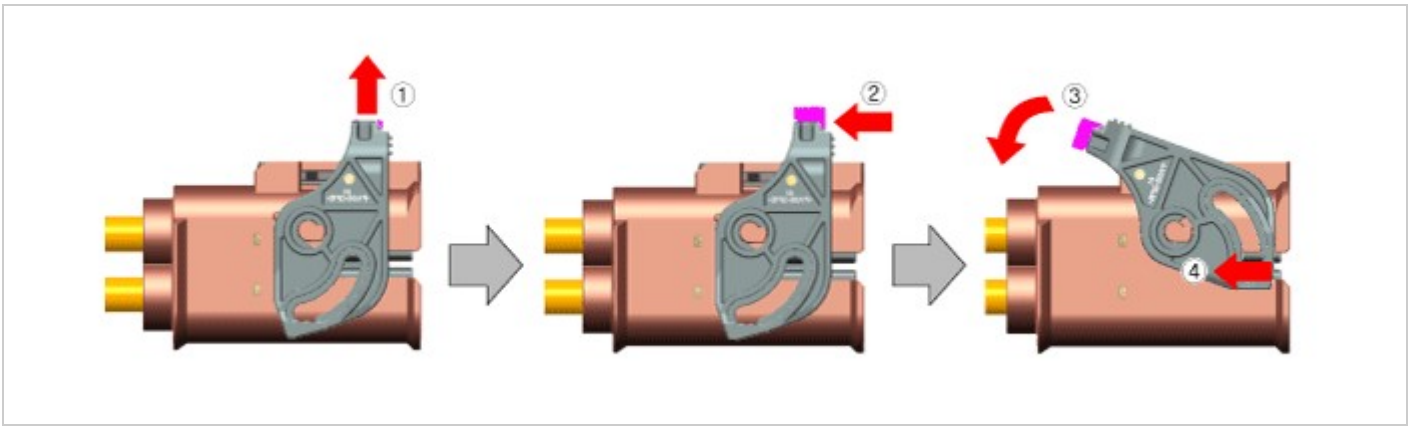

(3) Measure the voltage between the inverter (+) terminal and the inverter (-) terminal.

Less than 30V : High voltage circuit properly shut
More than 30V : Fault on high voltage circuit

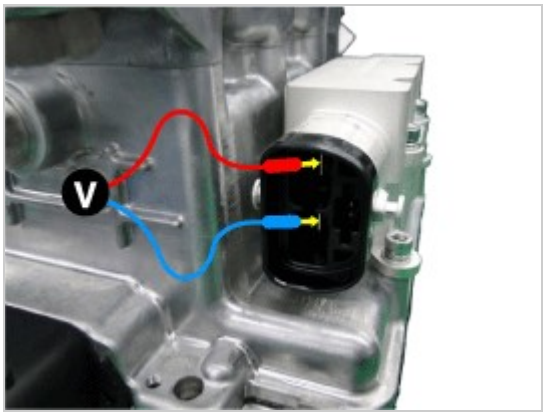

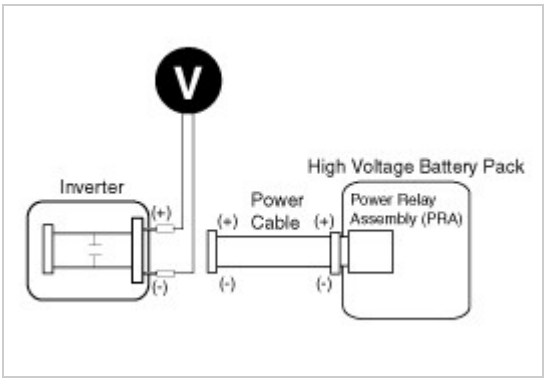

WARNING

- If measured more than 30V, check if the safety plug is removed completely.If measured more than 30V despite the safety plug is removed, there can be serious problems on the high voltage circuit. In this case, check DTC and never touch the high voltage system circuits.

Suspension System

Specifications

Front Suspension

Item		Specification
Suspension type		Mac Pherson Strut
Shock absorber	Type	Conventional valve

Rear Suspension

Item		Specification
Suspension type		Multi link
Shock absorber	Type	Conventional valve

Wheel & Tire

Item		Specification	
		Front	Rear
Aluminum		6.0J x 15	
		7.0J x 17	
Tire		195/65 R15	
		225/45 R17	
Spare tire		TMK (tire mobility kit)	
		T125/80 D15	
Tire pressure kPa (psi)	195/65 R15	250 (36)	250 (36)
	225/45 R17	250 (36)	250 (36)
	T125/80 D15	420 (60)	420 (60)

Wheel Alignment

Item		Specification	
		Front	Rear
Toe-in	Individual	0.05° ± 0.1°	0.07° ± 0.1°
	Total	0.1° ± 0.2°	0.14° ± 0.2°
Camber angle		-0.55° ± 0.5°	-1.2° ± 0.5°
Caster angle		4.5° ± 0.5°	-
King-pin angle		14.0° ± 0.5°	-
Ride height		368 ± 10 mm (14.49 ± 0.4 Inch)	367 ± 10 mm (14.45 ± 0.4 Inch)

Tightening Torques

Front Suspension

Item	Tightening torque (kgf.m)		
	N.m	kgf.m	lb-ft
Hub nuts	107.9 - 127.5	11.0 - 13.0	79.6 - 94.0
Lower arm to sub frame (Front)	117.7 - 137.3	12.0 - 14.0	86.8 - 101.3
Lower arm to sub frame (Rear)	156.9 - 176.5	16.0 - 18.0	115.7 - 130.2
Lower arm to knuckle	78.5 - 98.1	8.0 - 10.0	57.9 - 72.3
Tie rod end castle nut	78.5 - 98.1	8.0 - 10.0	57.9 - 72.3
Steering gear box to sub frame	88.3 - 107.9	9.0 - 11.0	65.1 - 79.6
Stabilizer bar to stabilizer link	98.1 - 117.7	10.0 - 12.0	72.3 - 86.8
Stabilizer bar to sub frame	44.1 - 53.9	4.5 - 5.5	32.5 - 39.8
Stabilizer bar to front strut assembly	98.1 - 117.7	10.0 - 12.0	72.3 - 86.8
Front strut assembly to front axle	156.9 - 176.5	16.0 - 18.0	115.7 - 130.2
Sub frame mounting bolt & nut	156.9 - 176.5	16.0 - 18.0	115.7 - 130.2
Sub frame stay bolt	44.1 - 53.9	4.5 - 5.5	32.5 - 39.8
Bolt connecting universal joint to pinion	32.4 - 38.3	3.3 - 3.8	23.9 - 27.5
Roll rod bracket to roll rod support bracket fixing bolt & nut	107.9 - 127.5	11.0 - 13.0	79.6 - 94.0

Rear Suspension

Item	Tightening torque		
	Nm	kgf.m	lb-ft
Hub nut	107.9 - 127.5	11.0 - 13.0	79.6 - 94.0
Trailing arm to sub frame	98.1 - 117.7	10.0 -12.0	72.3 - 86.8
Trailing arm to carrier	137.3 - 156.9	14.0 - 16.0	101.3 - 115.7
Assist arm to sub frame	107.9 - 117.7	11.0 - 12.0	79.6 - 86.8
Assist arm to carrier	137.3 - 156.9	14.0 - 16.0	101.3 - 115.7
Lower arm to sub frame	107.9 - 117.7	11.0 - 12.0	79.6 - 86.8
Lower arm to carrier	137.3 - 156.9	14.0 - 16.0	101.3 - 115.7
Upper arm to sub frame	137.3 - 156.9	14.0 - 16.0	101.3 - 115.7
Upper arm to carrier	137.3 - 156.9	14.0 - 16.0	101.3 - 115.7
Shock absorber to frame	58.8 - 73.5	6.0 - 7.5	43.4 - 54.2
Shock absorber to lower arm	98.1 - 117.7	10.0 - 12.0	72.3 - 86.8
Stabilizer bar to stabilizer link	58.8 - 78.5	6.0 - 8.0	43.4 - 57.9
Stabilizer bar to sub frame	44.1 - 53.9	4.5 - 5.5	32.5 - 39.8
Stabilizer bar to lower arm	19.6 - 29.4	2.0 - 3.0	14.5 - 21.7
Sub frame mounting bolts	156.9 - 176.5	16.0 - 18.0	115.7 - 130.2

Special Service Tools

Tool (Number and Name)	Illustration	Use
09568-1S100		Saperate the ball joint from the front alxe

	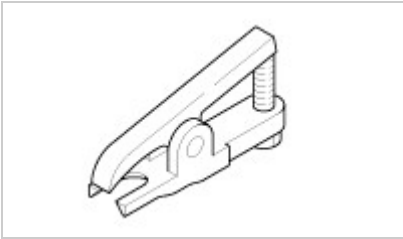	
09546-3X100 Shock absorber lock nut removal tool		Used for remove the shock absorber lock nut.

Suspension System

Troubleshooting

Symptom	Possible cause	Remedy
Hard steering	Improper front wheel alignment Excessive turning resistance of lower arm ball joint Low tire pressure No power assist	Correct Replace Adjust Repair and replace
Poor return of steering wheel to center	Improper front wheel alignment	Correct
Poor or rough ride	Improper front wheel alignment Malfunctioning shock absorber Broken or worn stabilizer Broken or worn coil spring Worn lower arm bushing	Correct Repair or replace Replace Replace Replace the lower arm assembly
Abnormal tire wear	Improper front wheel alignment Improper tire pressure Malfunctioning shock absorber	Correct Adjust or replace Replace
Wandering	Improper front wheel alignment Poor turning resistance of lower arm ball joint Loose or worn lower arm bushing	Correct Repair Retighten or replace
Vehicle pulls to one side	Improper front wheel alignment Excessive turning resistance of lower arm ball joint Broken or worn coil spring Bent lower arm	Correct Replace Replace Repair
Steering wheel shimmy	Improper front wheel alignment Poor turning resistance of lower arm ball joint Broken or worn stabilizer Worn lower arm bushing Malfunctioning shock absorber Broken or worn coil spring	Correct Replace Replace Replace Replace Replace
Bottoming	Broken or worn coil spring Malfunctioning shock absorber	Replace Replace

Wheel /tire noise, vibration and harshness concerns are directly related to vehicle speed and are not generally affected by acceleration, coasting or decelerating. Also, out-of-balance wheel and tires can vibrate at more than one speed. A vibration that is affected by the engine rpm, or is eliminated by placing the transmission in Neutral is not related to the tire and wheel. As a general rule, tire and wheel vibrations felt in the steering wheel are related to the front tire and wheel assemblies. Vibrations felt in the seat or floor are related to the rear tire and wheel assemblies. This can initially isolate a concern to the front or rear.

Careful attention must be paid to the tire and wheels. There are several symptoms that can be caused by damaged or worn tire and wheels. Perform a careful visual inspection of the tires and wheel assemblies. Spin the tires slowly and watch for signs of lateral or radial runout. Refer to the tire wear chart to determine the tire wear conditions and actions

Wheel and tire diagnosis		
Rapid wear at the center	Rapid wear at both shoulders	Wear at one shoulder

	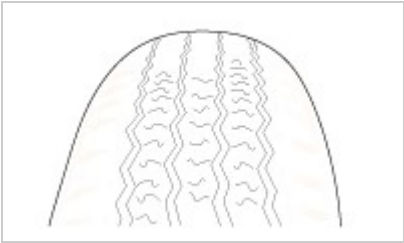	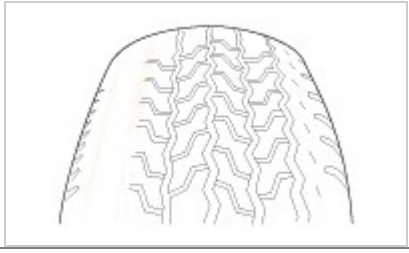
• Center-tread down to fabric due to excessive over inflated tires • Lack of rotation • Excessive toe on drive wheels • Heavy acceleration on drive	• Under-inflated tires • Worn suspension components • Excessive cornering speeds • Lack of rotation	• Toe adjustment out of specification • Camber out of specification • Damaged strut • Damaged lower arm
Partial wear	Feathered edge	Wear pattern
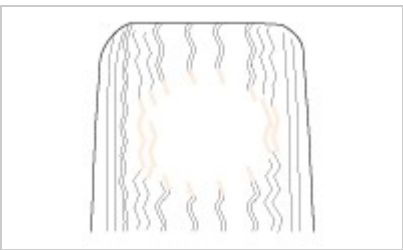	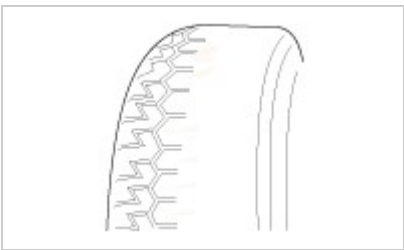	
• Caused by irregular burrs on brake drums	• Toe adjustment out of specification • Damaged or worn tie rods • Damaged knuckle	• Excessive toe on non-drive wheels • Lack of rotation

Suspension System

Components Location

1. Brake caliper
2. Lower arm
3. Sub frame
4. Steering gearbox
5. Stabilizer bar
6. Brake disc

Suspension System

Components

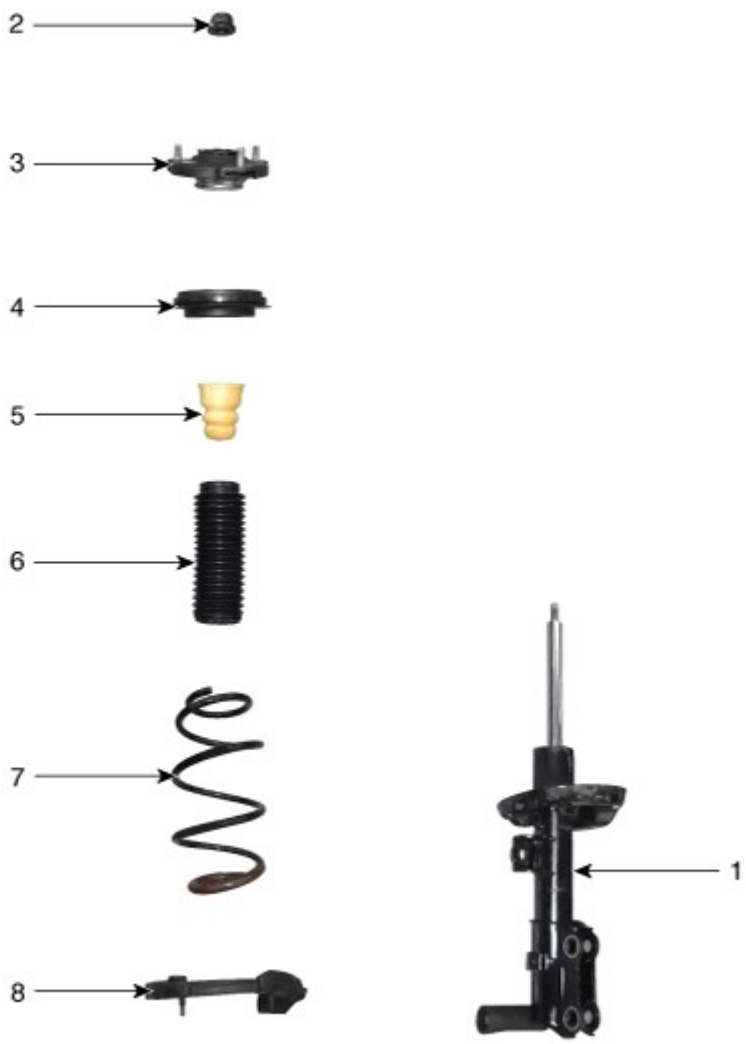

1. Strut assembly
2. Lock nut
3. Insulator
4. Strut bearing & Spring upper pad
5. Bumper rubber
6. Dust cover
7. Coli spring
8. Spring lower pad

Suspension System

Removal

1. Loosen the wheel nuts slightly.
   Raise the vehicle, and make sure it is securely supported.
2. Remove the front wheel and tire (A) from the front hub.

Tightening torque :
107.9 - 127.5 N.m (11.0 - 13.0 kgf.m, 79.6 - 94.0 lb-ft)

NOTICE

- Be careful not to damage the hub bolts when removing the front wheel and tire.

3. Loosen the brake hose mounting bolt and then remove the brake hose bracket.

Tightening torque :
8.8 - 13.7 N.m (0.9 - 1.4 kgf.m, 6.5 - 10.1 lb-ft)

4. Loosen the mounting holt and then remove the brake hose from the strut assembly.

Tightening torque :
8.8 - 13.7 N.m (0.9 - 1.4 kgf.m, 6.5 - 10.1 lb-ft)

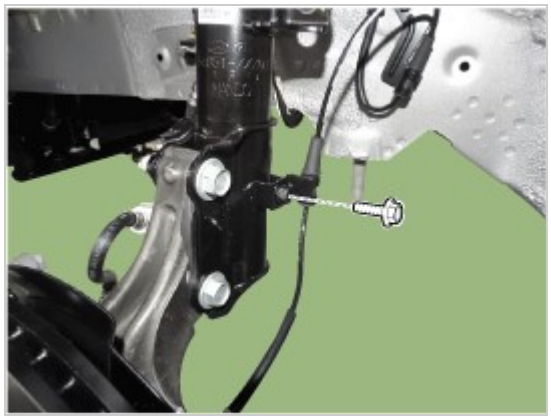

5. Disconnect the stabilizer link with the front strut assembly after loosening the nut.

Tightening torque :
98.1 - 117.7 N.m (10.0 - 12.0 kgf.m, 72.3 - 86.8 lb-ft)

NOTICE

- When loosening the nut, fix the outer hexagon of stabilizer bar link.
- Be careful not to damage the stabilizer link boots.

6. Remove the cowl top cover.
(Refer to Body - "Cowl Top Cover")

7. Loosen the upper strut mounting nut (A).

Tightening torque :
53.9 - 73.5 N.m (5.5 - 7.5 kgf.m, 39.7 - 54.2 lb-ft)

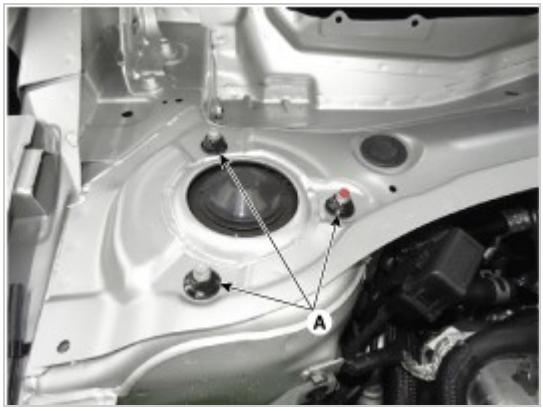

8. Remove the front strut assembly (A) from the front axle (B) by loosening the bolts & nuts.

Tightening torque :
156.9 - 176.5 N.m (16.0 - 18.0 kgf.m, 115.7 - 130.2 lb-ft)

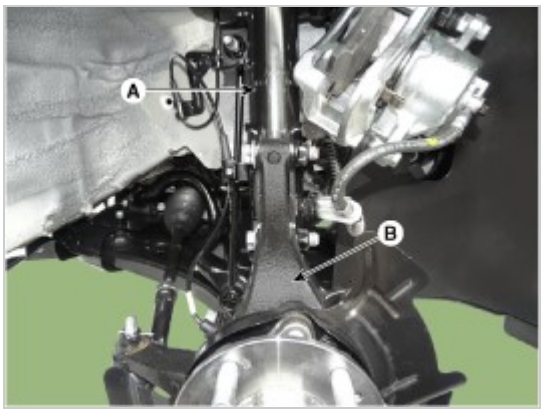

9. To install, reverse the removal procedure.

Disassembly

1. Using spring comperssor, compress the coil spring (A)

2. Using the special tool (09546-3X100), remove the self locking nut.

3. Remove the insulator, strut bearing, coil spring and dust cover from the strut assembly.

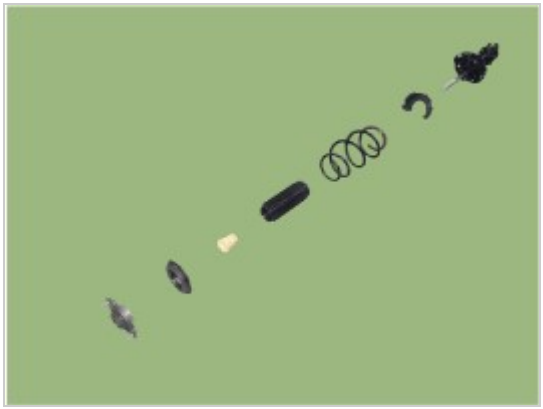

Inspection

1. Check the strut bearing for wear and damage.
2. Check the spring upper and lower pad for damage and deterioration.
3. Compress and extend the piston rod (A) and check that there is no abnormal resistance or unusual sound during operation.

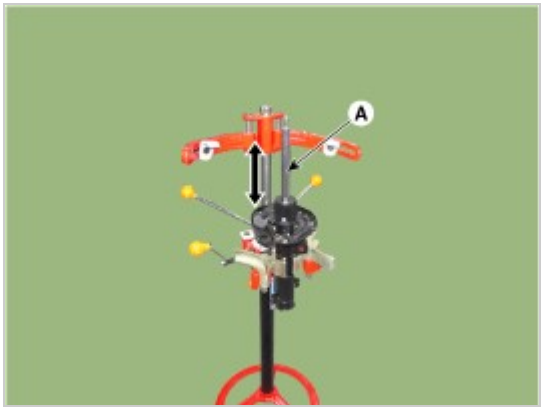

Disposal

1. Fully extend the piston rod.
2. Drill a hole on the (A) section to remove gas from the cylinder.

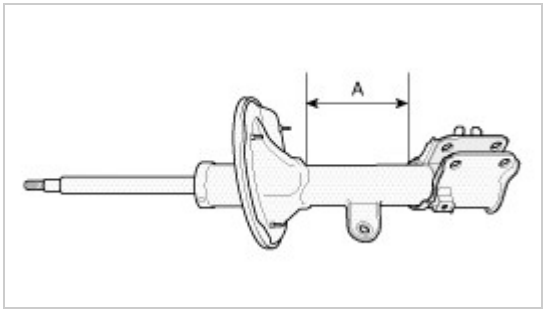

⚠ CAUTION

- The gas coming out is harmless, but be careful of chips that may fly when drilling.
- Be sure to wear safety goggles or eye protection when performing this task.

Reassembly

1. To install, reverse the removal procedure.
2. Compress and extend the piston rod (A) and check that there is no abnormal resistance or unusual sound during operation.

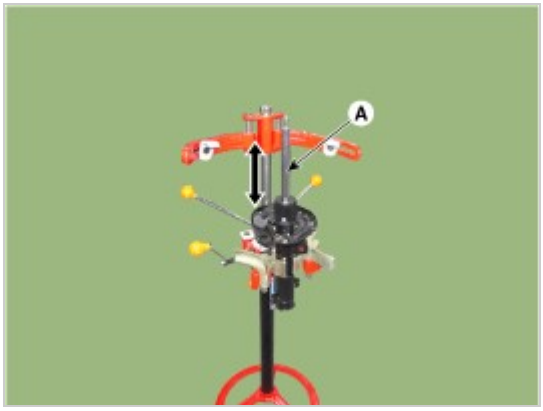

3. Using the special tool (09546-3X100), install the self locking nut.

Tightening torque :
58.8 - 68.6 N.m (6.0 - 7.0 kgf.m, 43.4- 50.6 lb-ft)

NOTICE

- Do not reuse the self locking nut.

Suspension System

Removal

1. Loosen the wheel nuts slightly.
   Raise the vehicle, and make sure it is securely supported.
2. Remove the front wheel and tire (A) from the front hub.

Tightening torque :
107.9 - 127.5 N.m (11.0 - 13.0 kgf.m, 79.6 - 94.0 lb-ft)

NOTICE

- Be careful not to damage the hub bolts when removing the front wheel and tire.

3. Loosen the lower arm nut and then remove the lower arm ball joint by using SST(09568-1S100).
   (1) Rmove the split pin (B).
   (2) Loosen the nut (C) and washer (D).
   (3) Using SST(09568-1S100), separate the ball joint (A) from the knuckle.

Tightening torque:
78.5 - 98.1 N.m (8.0 - 10.0 kgf.m, 57.9 - 72.3 lb-ft)

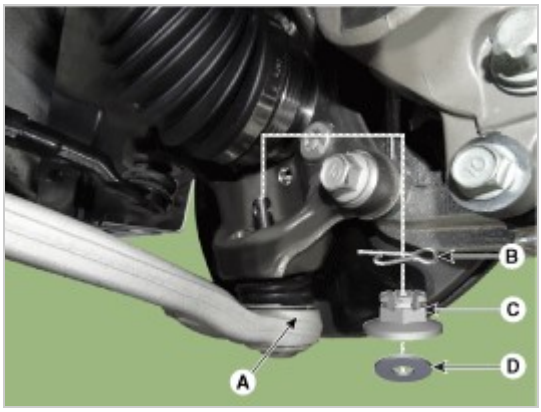

NOTICE

- Do not reuse the lower arm lock nut (C).

4. Remove the front lower (A) arm after loosening the bolts & nuts.

   Tightening torque
   Front : 117.7 - 137.3 N.m (12.0 - 14.0 kgf.m, 86.8 - 101.3 lb-ft)
   Rear : 156.9 - 176.5 N.m (16.0 - 18.0 kgf.m, 115.7 - 130.2 lb-ft)

5. To install, reverse the removal procedure.
6. Check the wheel Alignment.
   (Refer to Tires/Wheels - "Alignment")

Inspection

1. Check the bushing for wear and deterioration.
2. Check the lower arm for deformation.
3. Check the all bolts and nuts.

Suspension System

Removal

1. Loosen the bolt (A) and then disconnect the universal joint assembly from the pinion of the steering gear box.

   Tightening torque :
   32.4 - 37.3 N.m (3.3 - 3.8 kgf.m, 23.9 - 27.5 lb-ft)

NOTICE

- Do not reuse the bolt.
- Lock the steering wheel in the straight ahead position to prevent the damage of the clock spring inner cable.
- When assembling, insert the shark pin into the universal joint york slot as the illustration below.

2. Loosen the wheel nuts slightly.
   Raise the vehicle, and make sure it is securely supported.
3. Remove the front wheel and tire (A) from the front hub.

Tightening torque :
107.9 - 127.5 N.m (11.0 - 13.0 kgf.m, 79.6 - 94.0 lb-ft)

NOTICE

- Be careful not to damage the hub bolts when removing the front wheel and tire.

4. Remove the tie rod end ball joint.
   (1) Rmove the split pin (C).
   (2) Loosen the nut (B).
   (3) Using SST(09568-1S100), separate the ball joint (A) from the knuckle.

Tightening torque :
78.5 - 98.1 N.m (8.0 - 10.0 kgf.m, 57.9 - 72.3 lb-ft)

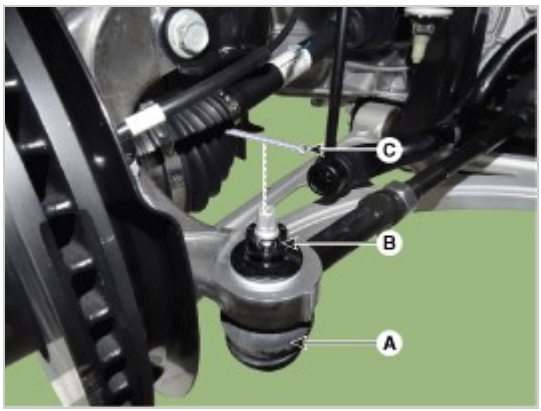

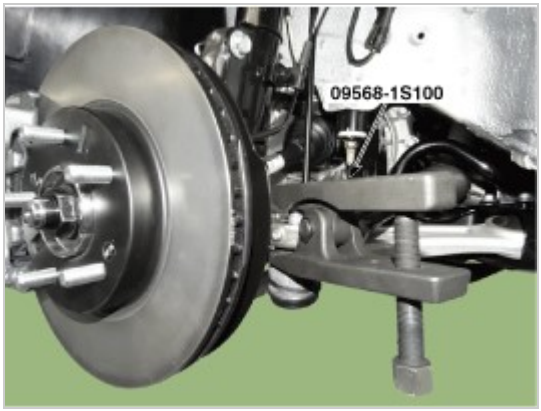

5. Loosen the lower arm nut and then remove the lower arm ball joint by using SST(09568-1S100).
   (1) Rmove the split pin (B).
   (2) Loosen the nut (C) and washer (D).
   (3) Using SST(09568-1S100), separate the ball joint (A) from the knuckle.

   Tightening torque :
   78.5 - 98.1 N.m (8.0 - 10.0 kgf.m, 57.9 - 72.3 lb-ft)

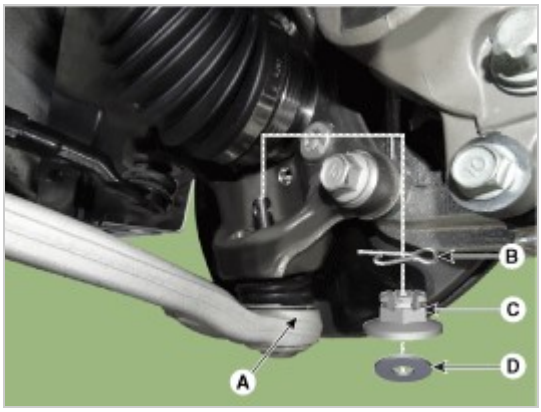

NOTICE

- Do not reuse the lower arm lock nut (C).

6. Disconnect the stabilizer link with the front strut assembly after loosening the nut (A).

   Tightening torque :
   98.1 - 117.7 N.m (10.0 - 12.0 kgf.m, 72.3 - 86.8 lb-ft)

NOTICE

- When loosening the nut (A), fix the outer hexagon of stabilizer bar link.
- Be careful not to damage the stabilizer link boots.

7. Remove the heat protector (A).

Tightening torque :
9.8 - 11.8 N.m (1.0 - 1.2 kgf.m, 7.2 - 8.7 lb-ft)

8. Loosen the mounting bolt (A)&(B) then remove the pipe from the sub frame.

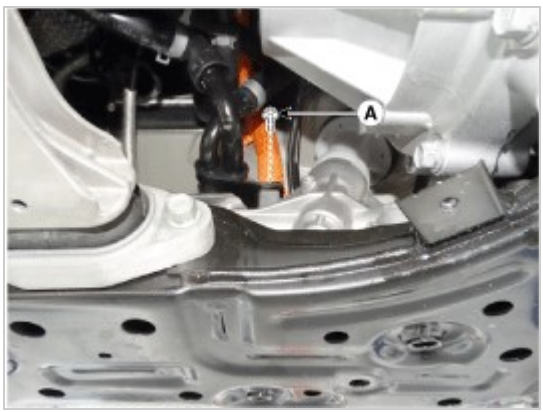

9. Remove the muffler rubber hanger (A).

10. Remove the roll rod stopper (A) by loosening the bolt and nut.

Tightening torque :
107.9 - 127.5 N.m (11.0 - 13.0 kgf.m, 79.6 - 94.0 lb-ft)

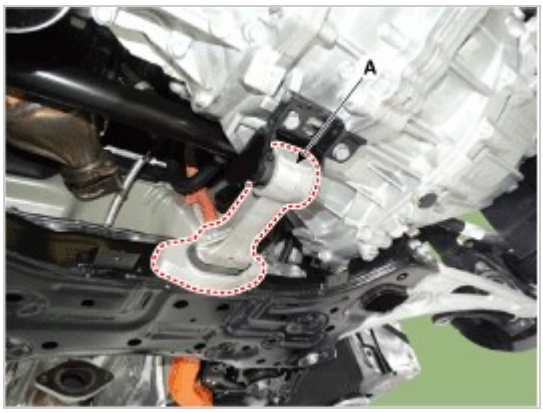

NOTICE

- Set up a transmission jack for safety.

11. Loosen the mounting bolts and then remove the stabilizer bar.

Tightening torque :
44.1 - 53.9 N.m (4.5 - 5.5 kgf.m, 32.5 - 39.8 lb-ft)

12. Remove the stabilizer link.

Tightening torque :
98.1 - 117.7 N.m (10.0 - 12.0 kgf.m, 72.3 - 86.8 lb-ft)

NOTICE

- When loosening the nut, fix the outer hexagon of stabilizer bar link.

13. Remove the bushing.

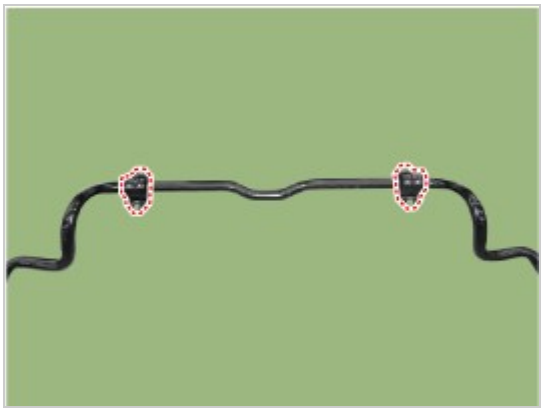

14. To install, reverse the removal procedure.
15. Check the wheel Alignment.
    (Refer to Tires/Wheels - "Alignment")

Inspection

1. Check the bushing for wear and deterioration.
2. Check the front stabilizer bar for deformation.
3. Check the front stabilizer link ball joint for damage.

Suspension System

Removal

1. Loosen the bolt (A) and then disconnect the universal joint assembly from the pinion of the steering gear box.

Tightening torque :
32.4 - 37.3 N.m (3.3 - 3.8 kgf.m, 23.9 - 27.5 lb-ft)

NOTICE

- Do not reuse the bolt.
- Lock the steering wheel in the straight ahead position to prevent the damage of the clock spring inner cable.
- When assembling, insert the shark pin into the universal joint york slot as the illustration below.

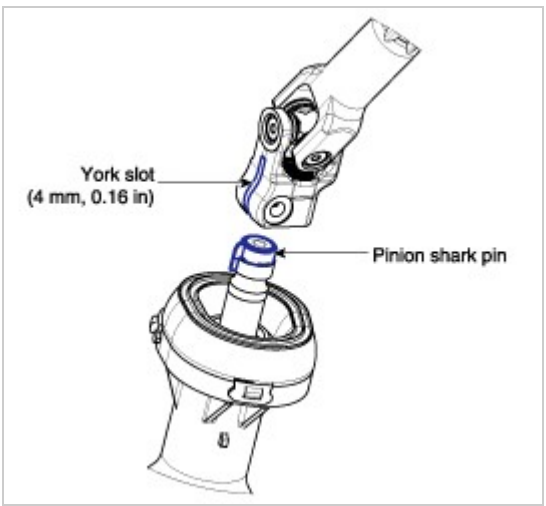

2. Loosen the wheel nuts slightly.
   Raise the vehicle, and make sure it is securely supported.
3. Remove the front wheel and tire (A) from the front hub.

Tightening torque :
107.9 - 127.5 N.m (11.0 - 13.0 kgf.m, 79.6 - 94.0 lb-ft)

NOTICE

- Be careful not to damage the hub bolts when removing the front wheel and tire.

4. Remove the tie rod end ball joint.
   (1) Rmove the split pin (C).
   (2) Loosen the nut (B).
   (3) Using SST(09568-1S100), separate the ball joint (A) from the knuckle.

Tightening torque :
78.5 - 98.1 N.m (8.0 - 10.0 kgf.m, 57.9 - 72.3 lb-ft)

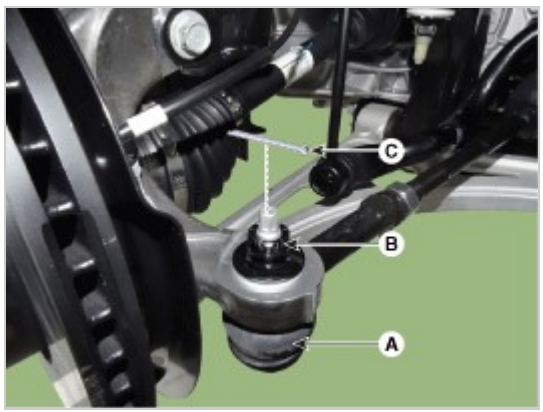

5. Loosen the lower arm nut and then remove the lower arm ball joint by using SST(09568-1S100).
   (1) Rmove the split pin (B).
   (2) Loosen the nut (C) and washer (D).
   (3) Using SST(09568-1S100), separate the ball joint (A) from the knuckle.

Tightening torque :
78.5 - 98.1 N.m (8.0 - 10.0 kgf.m, 57.9 - 72.3 lb-ft)

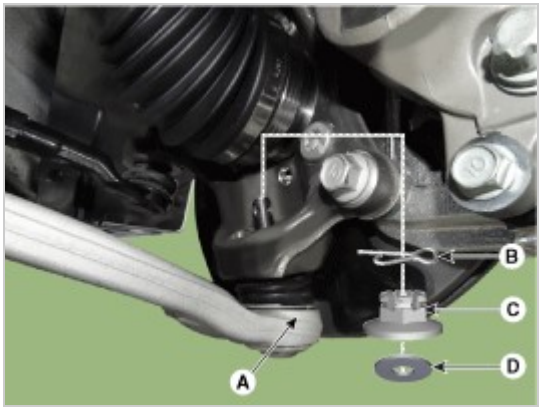

NOTICE

- Do not reuse the lower arm lock nut (C).

6. Disconnect the stabilizer link with the front strut assembly after loosening the nut (A).

Tightening torque :
98.1 - 117.7 N.m (10.0 - 12.0 kgf.m, 72.3 - 86.8 lb-ft)

NOTICE

- When loosening the nut (A), fix the outer hexagon of stabilizer bar link.
- Be careful not to damage the stabilizer link boots.

7. Remove the heat protector (A).

Tightening torque :
9.8 - 11.8 N.m (1.0 - 1.2 kgf.m, 7.2 - 8.7 lb-ft)

8. Loosen the mounting bolt (A)&(B) then remove the pipe from the sub frame.

9. Remove the muffler rubber hanger (A).

10. Remove the roll rod stopper (A) by loosening the bolt and nut.

Tightening torque :
107.9 - 127.5 N.m (11.0 - 13.0 kgf.m, 79.6 - 94.0 lb-ft)

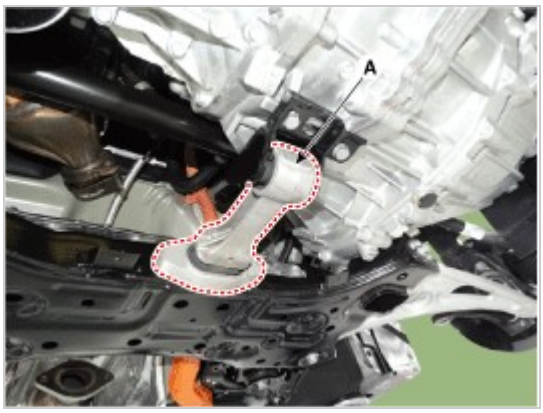

NOTICE

- Set up a transmission jack for safety.

11. Loosen the mounting bolts and then remove the stabilizer bar.

Tightening torque :
44.1 - 53.9 N.m (4.5 - 5.5 kgf.m, 32.5 - 39.8 lb-ft)

12. Remove the protector (A).

Tightening torque :
6.9 - 10.8 N.m (0.7 - 1.1 kgf.m, 5.1 - 8.0 lb-ft)

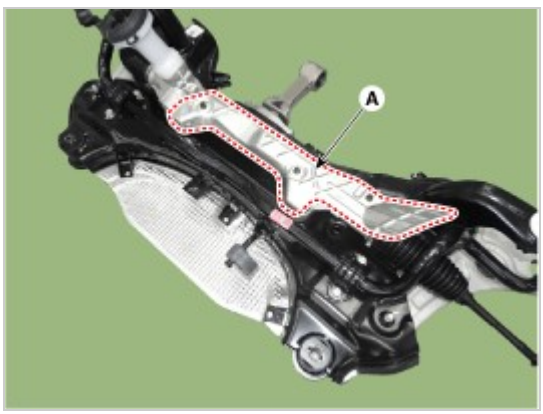

13. Remove the steering gearbox from the front sub frame by loosening the mounting bolts.

Tightening torque :
88.2 - 107.8 N.m (9.0 - 11.0 kgf.m, 65.0 - 79.5 lb-ft)

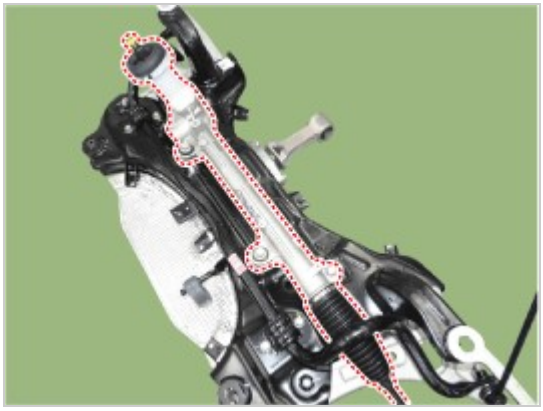

14. Remove the front lower (A) arm after loosening the bolts & nuts.

Tightening torque
Front : 117.7 - 137.3 N.m (12.0 - 14.0 kgf.m, 86.8 - 101.3 lb-ft)
Rear : 156.9 - 176.5 N.m (16.0 - 18.0 kgf.m, 115.7 - 130.2 lb-ft)

15. To install, reverse the removal procedure.
16. Check the wheel Alignment.
    (Refer to Tires/Wheels - "Alignment")

Suspension System

Components Location

1. Rear upper arm
2. Assist arm
3. Rear cross member
4. Rear stabilizer bar
5. Trailing arm
6. Rear lower arm
7. Rear coil spring
8. Rear shock absorber

Suspension System

Components

1. Shock absorber dust cap
2. Lock nut
3. Insulator assembly
4. Bumper rubber
5. Dust cover
6. Shock absorber

Suspension System

Removal

1. Loosen the wheel nuts slightly.
   Raise the vehicle, and make sure it is securely supported.
2. Remove the rear wheel and tire (A) from the rear hub.

   Tightening torque :
   107.9 - 127.5 N.m (11.0 - 13.0 kgf.m, 79.6 - 94.0 lb-ft)

NOTICE

- Be careful not to damage the hub bolts when removing the rear wheel and tire (A).

3. Remove the rear shock absorber (A) from the frame by loosening the bolt.

Tightening torque :
58.8 - 73.5 N.m (6.0 - 7.5 kgf.m, 43.4 - 54.2 lb-ft)

4. Loosen the bolt & nut and then remove the rear shock absorber (A) from the torsion beam axle.

Tightening torque :
98.1 - 117.7 N.m (10.0 - 12.0 kgf.m, 72.3 - 86.8 lb-ft)

5. To install, reverse the removal procedure.

Disassembly

1. Remove the lock nut cover (A).

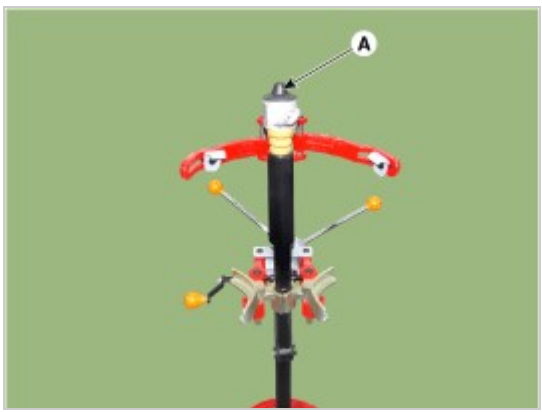

2. Using the special tool (09546-3X100), install the self locking nut.

3. Separate the bracket assembly (A), bumper rubber (B), dust cover (C), shock absorber (D).

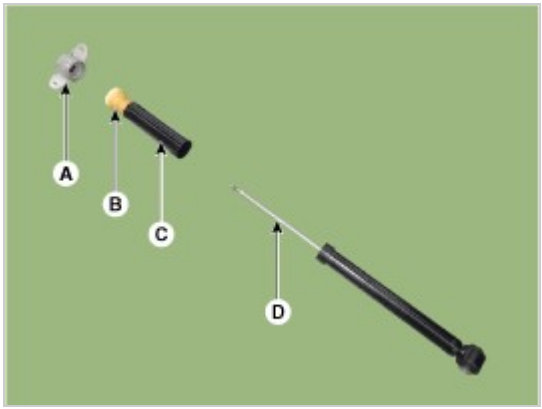

Disposal

1. Remove the strike cap (A) from the shock absorber assembly.
2. Remove the gas by Drilling a hole in the inner oil seal.

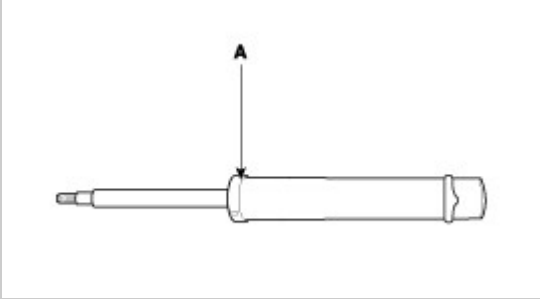

⚠ CAUTION

- The gas coming out is harmless but be careful of chips that may fly when drilling.

Reassembly

1. To reassembly, reverse the disassembly procedure.
2. Using SST (09546-3X100), install the lock nut.

Tightening torque :
19.6 - 24.5 N.m (2.0 - 2.5 kgf.m, 14.5 - 18.1 lb-ft)

NOTICE

- Do not reuse the self locking nut.

3. Install the lock nut cover (A).

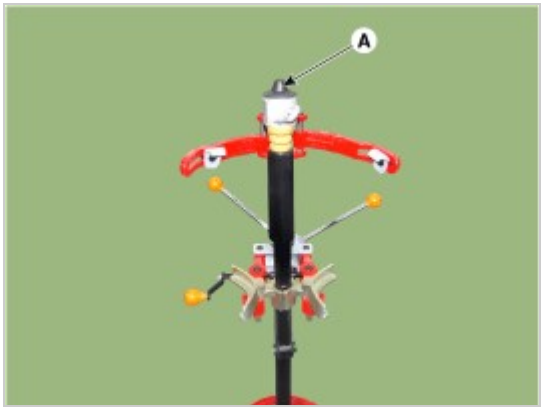

Suspension System

Removal

1. Loosen the wheel nuts slightly.
   Raise the vehicle, and make sure it is securely supported.
2. Remove the rear wheel and tire (A) from the rear hub.

Tightening torque :
107.9 - 127.5 N.m (11.0 - 13.0 kgf.m, 79.6 - 94.0 lb-ft)

NOTICE

- Be careful not to damage the hub bolts when removing the rear wheel and tire (A).

3. Loosen the rear upper arm mounting bolt and then remove the rear upper arm (A).

Tightening torque :
137.3 - 156.9 N.m (14.0 - 16.0 kgf.m, 101.3 - 115.7 lb-ft)

NOTICE

- Set up the transmission jack under the lower arm in order to remove the upper arm in no-load condition .

4. Disconnect the rear wheel speed sensor connector (A).

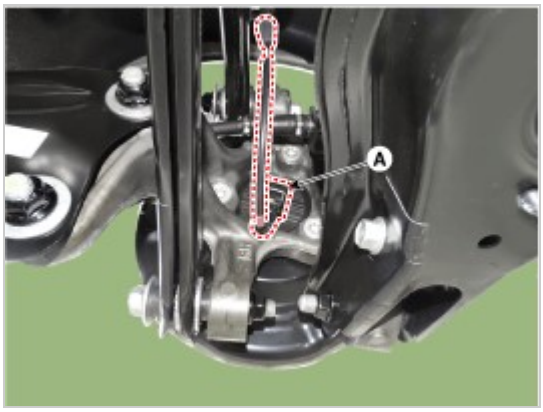

5. Remove the wheel speed sensor cable bracket.

Tightening torque :
6.8 - 10.7 N.m (0.7 - 1.1 kgf.m, 5.0 - 7.9 lb-ft)

6. Remove the parking brake cable fromt the rear caliper.
(Refer to Brake System - "Rear disc brake")

7. Loosen the wheel speed sensor cable bracket nut and then separate the cables from the trailing arm.

Tightening torque :
6.8 - 10.7 N.m (0.7 - 1.1 kgf.m, 5.0 - 7.9 lb-ft)

8. Remove the parking brake cable bracket (A) and then separate the cables from the trailing arm.

Tightening torque :
8.8 - 13.7 N.m (0.9 - 1.4 kgf.m, 6.5 - 10.1 lb-ft)

9. Remove the rear shock absorber (A) from the frame by loosening the bolt.

Tightening torque :
58.8 - 73.5 N.m (6.0 - 7.5 kgf.m, 43.4 - 54.2 lb-ft)

10. Loosen the mounting bolt and then remove the trailing arm with the frame.

Tightening torque :
98.1 - 117.7 N.m (10.0 - 12.0 kgf.m, 72.3 - 86.8 lb-ft)

11. Remove the main muffler.
(Refer to Engine Mechanical System - Muffler")

12. After setting a jack, loosen the bolts and then remove the rear cross member.

Tightening torque :
156.9 - 176.5 N.m (16.0 - 18.0 kgf.m, 115.7 - 130.2 lb-ft)

13. Loosen the bolt & nut then remove the rear upper arm with the sub frame.

Tightening torque :
137.3 - 156.9 N.m (14.0 - 16.0 kgf.m, 101.3 - 115.7 lb-ft)

14. Installation in the reverse of removal.

Inspection

1. Check the bushing for wear and deterioration.
2. Check for all bolts and nut.

Suspension System

Removal

1. Loosen the wheel nuts slightly.
Raise the vehicle, and make sure it is securely supported.
2. Remove the rear wheel and tire (A) from the rear hub.

Tightening torque :
107.9 - 127.5 N.m (11.0 - 13.0 kgf.m, 79.6 - 94.0 lb-ft)

NOTICE

- Be careful not to damage the hub bolts when removing the rear wheel and tire (A).

3. Loosen the bolt & nut and then remove the rear shock absorber (A) from the rear lower arm.

Tightening torque :
98.1 - 117.7 N.m (10.0 - 12.0 kgf.m, 72.3 - 86.8 lb-ft)

4. Loosen the nut and then remove the rear stabilizer link (A).

Tightening torque :
58.8 - 78.5 N.m (6.0 - 8.0 kgf.m, 43.4 - 57.9 lb-ft)

NOTICE

- When loosening the nut (A), fix the outer hexagon of stabilizer bar link.

5. Loosen the bolt & nut and then remove the rear lower arm from the rear axle.

Tightening torque :
137.3 - 156.9 N.m (14.0 - 16.0 kgf.m, 101.3 - 115.7 lb-ft)

NOTICE

- Set up the transmission jack under the lower arm in order to remove it in no-load condition.

6. Loosen the bolt & nut and then remove the rear lower arm (A) from the rear cross member.

Tightening torque :
107.9 - 117.7 N.m (11.0 - 12.0 Kgf.m, 79.6 - 86.8 lb-ft)

7. Remove the stabilizer link from the rear lower arm.

Tightening torque :
19.6 - 29.4 N.m (2.0 - 3.0 Kgf.m, 14.5 - 21.7 lb-ft)

8. Installation in the reverse of removal.
9. Check the alignment.
(Refer to Tires/Wheels - "Alignment")

Inspection

1. Check the bushing for wear and deterioration.
2. Check the rear lower arm for deformation.
3. Check for all bolts and nut.
4. Check the cracks or the cutting of the lower .

Suspension System

Removal

1. Loosen the wheel nuts slightly.
Raise the vehicle, and make sure it is securely supported.
2. Remove the rear wheel and tire (A) from the rear hub.

Tightening torque :
107.9 - 127.5 N.m (11.0 - 13.0 kgf.m, 79.6 - 94.0 lb-ft)

NOTICE

- Be careful not to damage the hub bolts when removing the rear wheel and tire (A).

3. Loosen the nut and then remove the rear stabilizer link (A).

Tightening torque :
58.8 - 78.5 N.m (6.0 - 8.0 kgf.m, 43.4 - 57.9 lb-ft)

NOTICE

- When loosening the nut (A), fix the outer hexagon of stabilizer bar link.

4. Loosen the mounting bolt and then remove the stabilizer bar from the rear cross member.

Tightening torque :
44.1 - 53.9 N.m (4.5 - 5.5 kgf.m, 32.5 - 39.8 lb-ft)

5. Remove the stabilizer link from the rear lower arm.

Tightening torque :
19.6 - 29.4 N.m (2.0 - 3.0 Kgf.m, 14.5 - 21.7 lb-ft)

6. Remove the bushing.

7. Installation in the reverse of removal.

Inspection

1. Check the rear stabilizer bar for deformation.
2. Check the rear stabilizer link ball joint for damage.

Suspension System

Removal

1. Loosen the wheel nuts slightly.
   Raise the vehicle, and make sure it is securely supported.
2. Remove the rear wheel and tire (A) from the rear hub.

Tightening torque :
107.9 - 127.5 N.m (11.0 - 13.0 kgf.m, 79.6 - 94.0 lb-ft)

NOTICE

- Be careful not to damage the hub bolts when removing the rear wheel and tire (A).

3. Loosen the bolt and then remove the assist arm (A) from the rear axle.

Tightening torque :
137.3 - 156.9 N.m (14.0 - 16.0 kgf.m, 101.3 - 115.7 lb-ft)

NOTICE

- Set up the transmission jack under the lower arm in order to remove the assist arm in no-load condition .

4. Loosen the bolt & nut and then remove the rear assist arm (A) with the rear cross member.

Tightening torque :
107.9 - 117.7 N.m (11.0 - 12.0 Kgf.m, 79.6 - 86.8 lb-ft)

5. Installation in the reverse of removal.
6. Check the alignment.
(Refer to Tires/Wheels - "Alignment")

Inspection

1. Check the bushing for wear and deterioration.
2. Check the rear lower arm for deformation..
3. Check the coil spring and spring pad for deterioration and deformation.
4. Check for all bolts and nut.

Suspension System

Removal

1. Loosen the wheel nuts slightly.
Raise the vehicle, and make sure it is securely supported.
2. Remove the rear wheel and tire (A) from the rear hub.

Tightening torque :
107.9 - 127.5 N.m (11.0 - 13.0 kgf.m, 79.6 - 94.0 lb-ft)

NOTICE

- Be careful not to damage the hub bolts when removing the rear wheel and tire (A).

3. Loosen the trailing arm mounting nuts (A), and then remove the trailing arm.

Tightening torque :
137.3 - 156.9 N.m (14.0 - 16.0 kgf.m, 101.3 - 115.7 lb-ft)

4. Remove the parking brake cable fromt the rear caliper.
(Refer to Brake System - "Rear disc brake")
5. Loosen the wheel speed sensor cable bracket nut and then separate the cables with the trailing arm.

Tightening torque :
6.8 - 10.7 N.m (0.7 - 1.1 kgf.m, 5.0 - 7.9 lb-ft)

6. Remove the parking brake cable bracket (A) and then separate the cables from the trailing arm.

Tightening torque :
8.8 - 13.7 N.m (0.9 - 1.4 kgf.m, 6.5 - 10.1 lb-ft)

7. Loosen the mounting bolt and then remove the trailing arm from the frame.

Tightening torque :
98.1 - 117.7 N.m (10.0 - 12.0 kgf.m, 72.3 - 86.8 lb-ft)

8. Installation in the reverse of removal.

Inspection

1. Check the bushing for wear and deterioration.
2. Check the rear lower arm for deformation..

Suspension System

Removal

1. Loosen the wheel nuts slightly.
   Raise the vehicle, and make sure it is securely supported.
2. Remove the rear wheel and tire (A) from the rear hub.

Tightening torque :
107.9 - 127.5 N.m (11.0 - 13.0 kgf.m, 79.6 - 94.0 lb-ft)

NOTICE

- Be careful not to damage the hub bolts when removing the rear wheel and tire (A).

3. Loosen the bolt & nut and then remove the rear shock absorber (A) from the torsion beam axle.

Tightening torque :
98.1 - 117.7 N.m (10.0 - 12.0 kgf.m, 72.3 - 86.8 lb-ft)

4. Loosen the nut and then remove the rear stabilizer link (A).

Tightening torque :
58.8 - 78.5 N.m (6.0 - 8.0 kgf.m, 43.4 - 57.9 lb-ft)

NOTICE

- When loosening the nut (A), fix the outer hexagon of stabilizer bar link.

5. Loosen the bolt & nut and then remove the rear lower arm from the rear axle.

Tightening torque :
137.3 - 156.9 N.m (14.0 - 16.0 kgf.m, 101.3 - 115.7 lb-ft)

NOTICE

- Set up the transmission jack under the lower arm in order to remove it in no-load condition.

6. Loosen the bolt & nut slightly and then pull the rear lower arm (A) in direction of a down

Tightening torque :
107.9 - 117.7 N.m (11.0 - 12.0 Kgf.m, 79.6 - 86.8 lb-ft)

7. Remove the coil spring, upper pad, lower pad.
8. Installation in the reverse of removal.
9. Check the rear alignment.
   (Refer to Tire/Wheels - "Alignment")

Inspection

1. Check the spring for distortion, aging or damage.
2. Check the spring upper pad and lower pad for aging or damage.

Suspension System

Removal

1. Loosen the wheel nuts slightly.
   Raise the vehicle, and make sure it is securely supported.
2. Remove the rear wheel and tire (A) from the rear hub.

Tightening torque :
107.9 - 127.5 N.m (11.0 - 13.0 kgf.m, 79.6 - 94.0 lb-ft)

NOTICE

- Be careful not to damage the hub bolts when removing the rear wheel and tire (A).

3. Loosen the rear upper arm mounting bolt and then remove the rear upper arm.

Tightening torque :
137.3 - 156.9 N.m (14.0 - 16.0 kgf.m, 101.3 - 115.7 lb-ft)

NOTICE

- Set up the transmission jack under the lower arm in order to remove the upper arm in no-load condition .

4. Disconnect the rear wheel speed sensor connector (A).

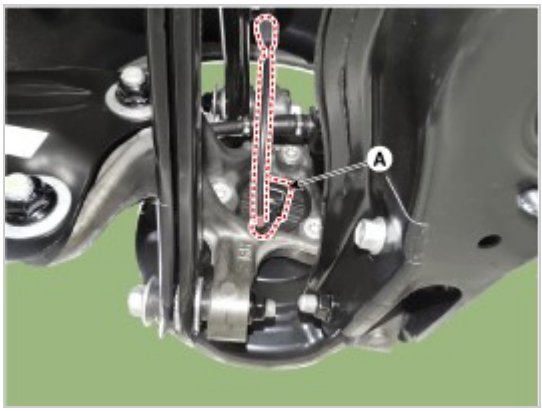

5. Remove the wheel speed sensor cable bracket.

Tightening torque :
6.8 - 10.7 N.m (0.7 - 1.1 kgf.m, 5.0 - 7.9 lb-ft)

6. Remove the parking brake cable fromt the rear caliper.
(Refer to Brake System - "Rear disc brake")

7. Loosen the wheel speed sensor cable bracket nut and then separate the cables from the trailing arm.

Tightening torque :
6.8 - 10.7 N.m (0.7 - 1.1 kgf.m, 5.0 - 7.9 lb-ft)

8. Remove the parking brake cable bracket (A) and then separate the cables from the trailing arm.

Tightening torque :
8.8 - 13.7 N.m (0.9 - 1.4 kgf.m, 6.5 - 10.1 lb-ft)

9. Remove the rear shock absorber (A) from the frame by loosening the bolt.

Tightening torque :
58.8 - 73.5 N.m (6.0 - 7.5 kgf.m, 43.4 - 54.2 lb-ft)

10. Loosen the mounting bolt and then remove the trailing arm from the frame.

Tightening torque :
98.1 - 117.7 N.m (10.0 - 12.0 kgf.m, 72.3 - 86.8 lb-ft)

11. Remove the main muffler.
(Refer to Engine Mechanical System - Muffler")

12. After setting a jack, loosen the bolts and then remove the rear cross member.

Tightening torque :
156.9 - 176.5 N.m (16.0 - 18.0 kgf.m, 115.7 - 130.2 lb-ft)

13. Remove the rear shock absorber.
(Refer to Rear Suspension System - "Rear Shock Absorber")

14. Remove the rear lower arm.
(Refer to Rear Suspension System - "Rear Lower Arm")

15. Remove the rear upper arm.
(Refer to Rear Suspension System - "Rear Upper Arm")

16. Remove the rear assist arm.
(Refer to Rear Suspension System - "Rear Assist Arm")

17. Remove the rear carrier assembly.
(Refer to Driveshaft and Axle - "Rear Carrier Assembly")

18. Remove the rear stabilizer bar.
    (Refer to Rear Suspension System - "Rear Stabilizer Bar ")
19. Installation in the reverse of removal.
20. Check the wheel Alignment.
    (Refer to Tires/Wheels - "Alignment")

Suspension System

NOTICE

- Using tires and wheel other than the recommended sizes could cause unusual handling characteristics and poor vehicle control, resulting in a serious accident.

Tire Wear

1. Measure the tread depth of the tires.

   Tread depth [limit] :1.6 mm (0.0630 in.)

2. If the remaining tread depth (A) is less than the limit, replace the tire.

NOTICE

- When the tread depth of the tires is less than 1.6 mm(0.063 in), the wear indicators (B) will appear.

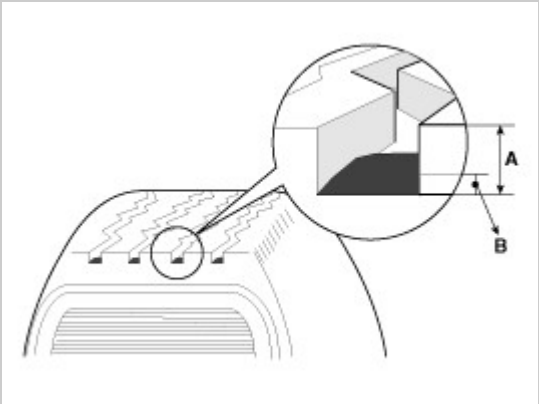

Tire Rotation

Checking For Pull And Wander

If the steering pulls to one side, rotate the tires according to the following wheel rotation procedure.

1. Rotate the front right and front left tires, and perform a road test in order to confirm vehicle stability.

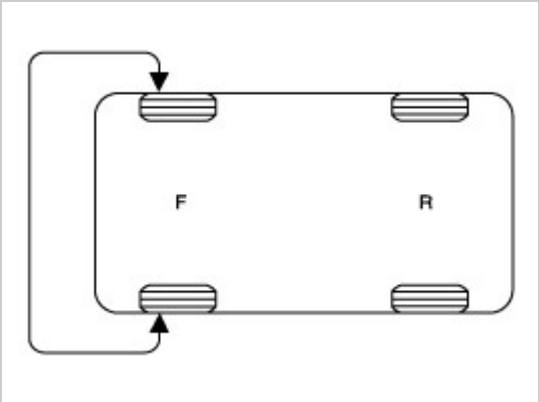

2. If the steering pulls to the opposite side, rotate the front and rear tires, and perform a road test again.

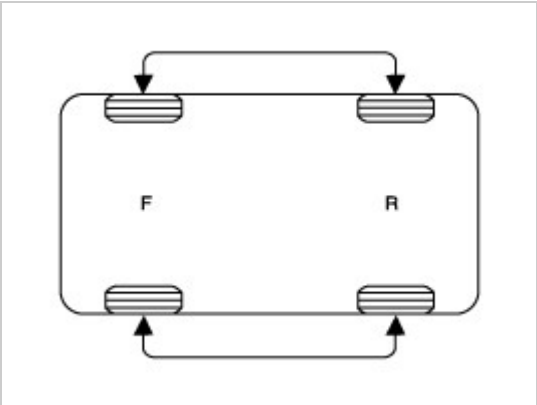

3. If the steering continues to pull to one side, rotate the front right and left tires again, and perform a road test.

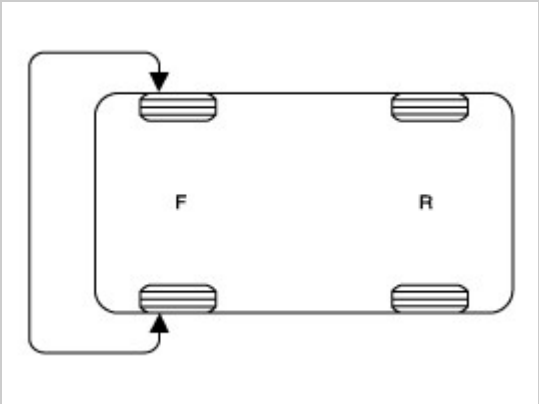

4. If the steering continues to pull to the opposite side, replace the front wheels with new ones.

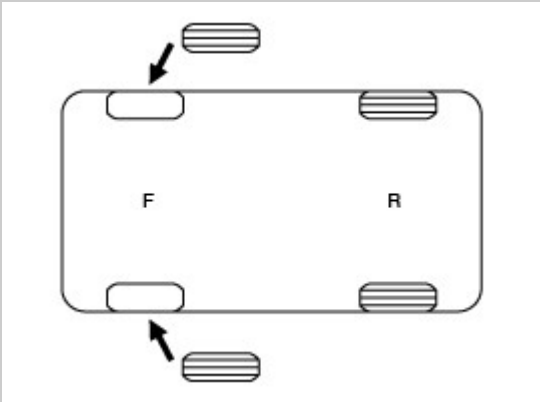

Removal

1. Remove valve core and deflate the tire.
2. Remove the side of the tire bead area from the wheel using tire changing machine .

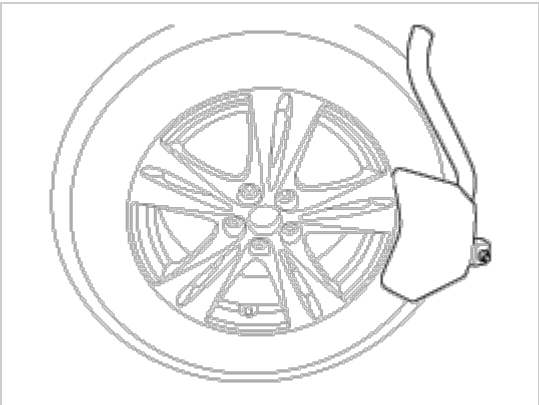

NOTICE

- The tire bead should be broken approx. 90° from the valve side of the wheel. The bead breaker should not be set too deep.
- Avoid tire/tool contact with the valve on dismount.
- Dismount should end near the valve.

3. Rotate the wheel clockwise.

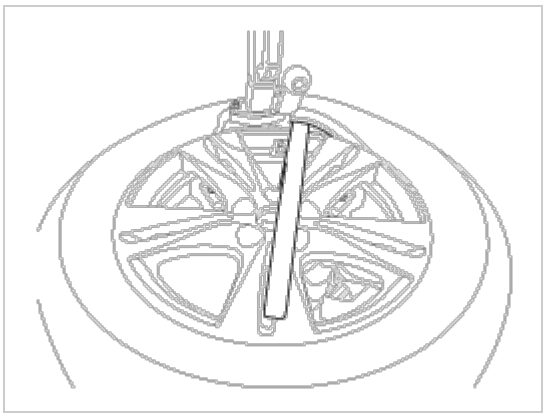

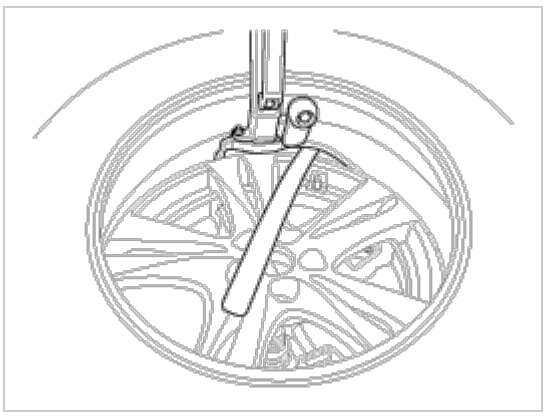

Installation

1. Apply tire soap or lubrication to the top and bottom tire beads.

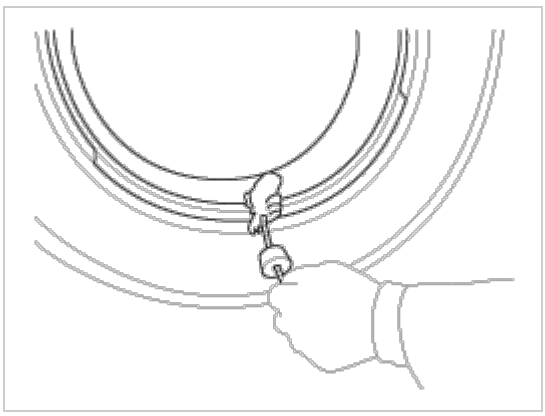

2. To fit the bottom bead, position the valve at the 5 o’clock position relative to the head on the tire changing machine.

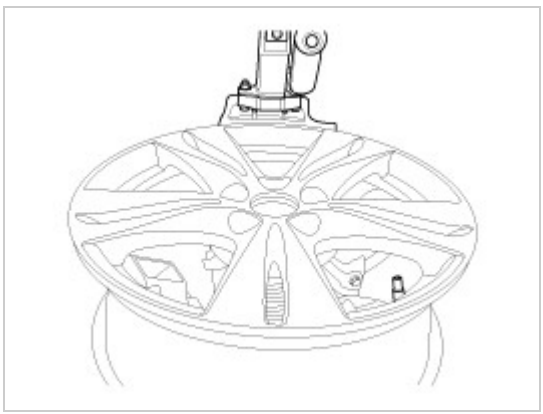

3. Place the tire on the rim so the bottom bead touches the edge of the rim after the valve (6 o’clock). Rotate the rim clockwise, and push down on the tire at the 3 o’clock position to fit bottom bead.

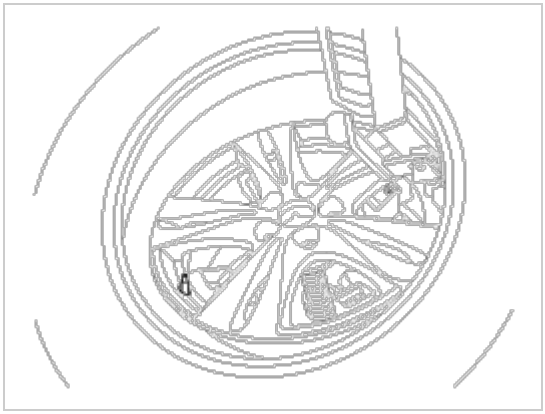

4. After bottom bead is on tire, rotate the rim until the valve is at the 5 o'clock position relative to the head on the tire changing machine. Push down on the tire at the 3 o'clock position and rotate the rim clockwise to fit the top bead.

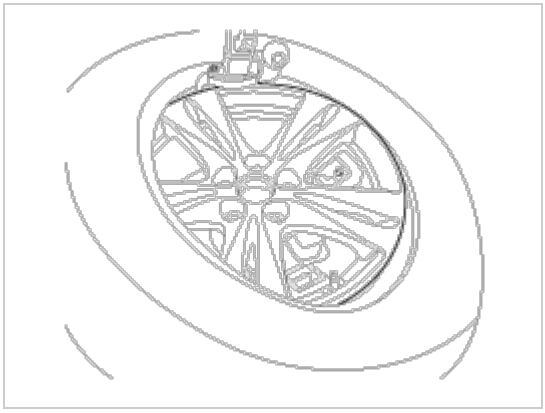

5. Inflate the tire until both beads seat.

Tire presuure :2.5 kg/cm² (36psi)

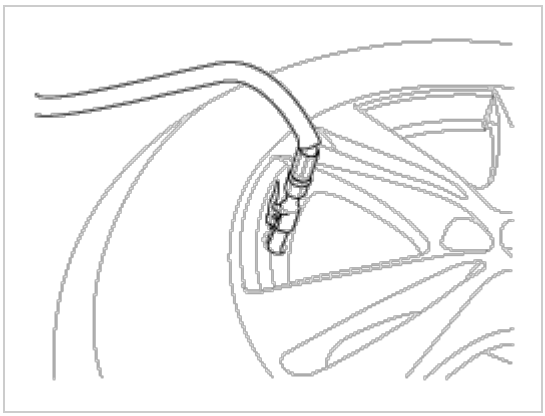

Hub nut tightening sequence

Tighten the hub nuts as follows.

Tightening torque:
107.9 - 127.5 N.m (11.0 - 13.0 kgf.m, 79.6 - 94.0 lb-ft)

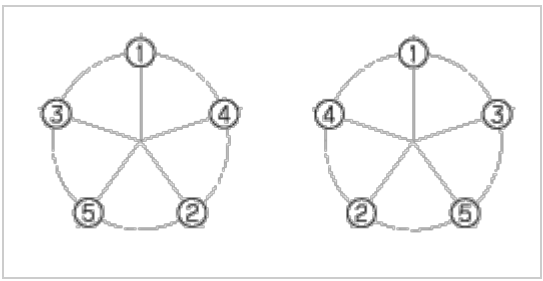

NOTICE

- When using an impact gun, final tightening torque should be checked using a torque wrench.

Run out inspection

1. Jack up the vehicle.

2. Measure the wheel Run-out by using a dial indicator as illustration below.

Run-out	Aluminum
Radial mm(in.)	Below 0.3(0.012)
Lateral mm(in.)	Below 0.3(0.012)

3. If measured value exceeds the standard value, replace the wheel.

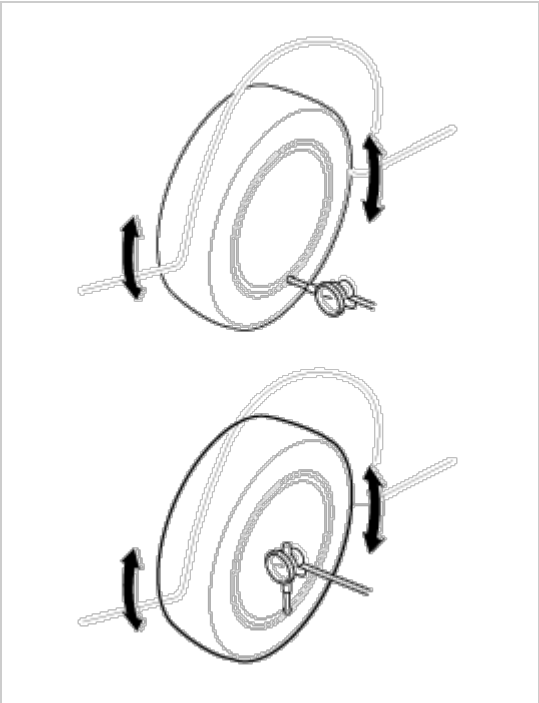

Front Wheel Alignment

NOTICE

- When using a commercially available computerized wheel alignment equipment to inspect the front wheel alignment, always position the vehicle on a level surface with the front wheels facing straight ahead.
- Prior to inspection, make sure that the front suspension and steering system are in normal operating condition and that the tires are inflated to the specified pressure.

Toe

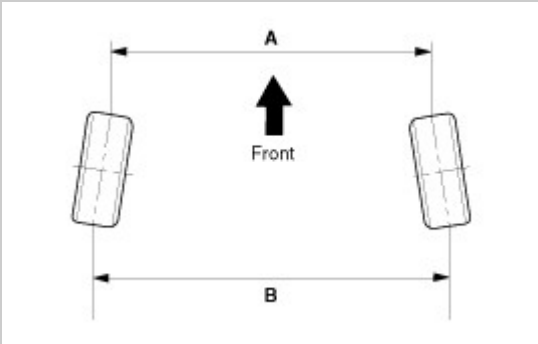

B - A > 0: Toe in
B - A < 0: Toe out

Toe Adjustment

1. Loosen the tie rod end lock nut.
2. Remove the bellows clip to prevent the bellows from being twisted.
3. Adjust the toe by screwing or unscrewing the tie rod. Toe adjustment should be made by turning the right and left tie rods by the same amount.

Toe
Total : 0.1°±0.2°
Individual : 0.05°±0.1°

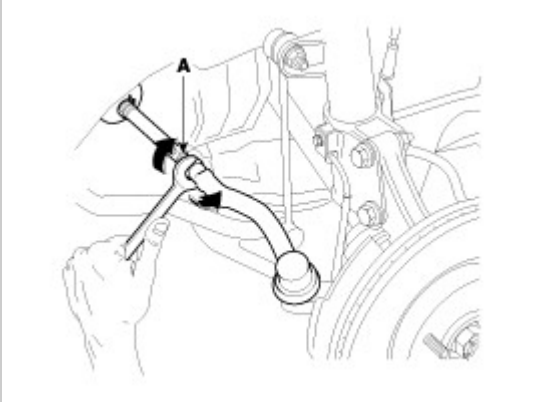

4. When completing the toe adjustment, install the bellows clip and tighten the tie rod end lock nut to specified torque.

   Tightening torque :
   49.0 - 53.9N.m (5.0 - 5.5kgf.m, 36.2 - 39.8lb-ft)

Camber

Camber angle :-0.55°±0.5°

When the wheel tilts out at the top, then the camber is positive (+).

When the wheel tilts in at the top, then the camber is negative (-).

Camber and Caster are pre-set at the factory, so they do not need to be adjusted. If the camber and caster are not within the standard value, replace or repair the damaged parts and then inspect again.

ITEM	Description
A	Positive camber angle
B	True vertical
C	Strut centerline

Caster

Caster is the tilting of the strut axis either forward or backward from vertical. A backward tilt is positive (+) and a forward tilt is negative (-).

Caster is pre-set at the factory and doesn"t need to be adjusted. If the caster is not within the standard value, replace the bent or damaged parts.

Caster :4.5°±0.5°

King-pin angle

King-pin angle :14.0°±0.5°

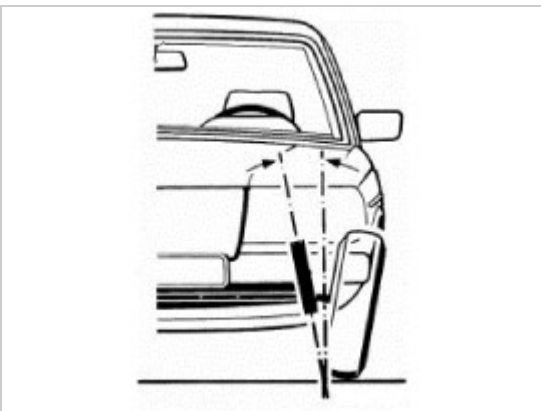

NOTICE

- The worn loose or damaged parts of the front suspension assembly must be replaced prior to measuring front wheel alignment.
- Caster are pre-set to the specified value at the factory and don"t need to be adjusted.
- If the caster are not within specifications, replace bent or damaged parts.
- The difference of left and right wheels about the the caster must be within the range of 0° ± 0.5°.

Rear Alignment

NOTICE

- When using a commercially available computerized wheel alignment equipment to inspect the rear wheel alignment, always position the vehicle on a level surface.
- Prior to inspection, make sure that the rear suspension system is in normal operating condition and that the tires are inflated to the specified pressure.

Toe

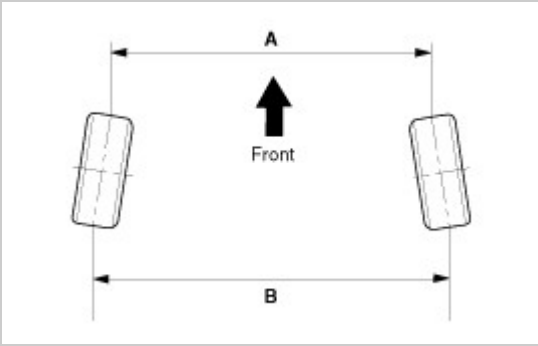

B - A > 0: Toe in
B - A < 0: Toe out

Toe Adjustment

1. Loosen the nut holding the assist arm cam bolt (A).
2. Adjust rear toe by turning the rear assist arm cam bolt (A) clockwise or counter clockwise. Toe adjustment should be made by turning the right and left cam bolt by the same amount.

   Toe
   Total : 0.14° ± 0.2°
   Individual : 0.7° ± 0.1°

3. When completing the toe adjustment, tighten the nut to specified torque.

   Tightening torque :
   107.9 - 117.7 N.m (11.0 - 12.0 kgf.m, 79.6 - 86.8 lb-ft)

Camber Adjustment

1. Loosen the nut holding the rear lower arm cam bolt (A).
2. Adjust rear camber by turning the rear lower arm cam bolt (A) clockwise or counter clockwise. Rear camber adjustment should be made by turning the right and left cam bolt by the same amount.

   Camber :-1.2 °± 0.5°

Suspension System

Components

1. Body control module(BCM)
2. TPMS sensor (FL)
3. TPMS sensor (RL)
4. TPMS sensor (FR)
5. TPMS sensor (RR)

Suspension System

Description

TREAD Lamp

– Tire Under Inflation / Leak Warning.

1. Turn on condition
   – When tire pressure is below allowed threshold
   – When rapid leak is detected by the sensor.
   – Indicates that tire needs to be re-inflated to placard pressure / repaired.
2. Turn off condition
   – Under-inflation ; When tire pressure is above (warning threshold + hysteresis).
   – Rapid Leak ; When tire pressure is above (leak warning threshold).

DTC Warning

1. Turn on condition
   – When the system detects a fault that is external to the receiver/ sensor.
   – When the system detects a receiver fault.
   – When the system detects a sensor fault.
2. Turn off condition
   – If the fault is considered as "critical", then the lamp is held on throughout the current Ignition cycle (even if the DTC has been demoted). This is because it is important to bring the problem to the drivers attention. On the following Ignition cycle, the demotion conditions will be re-checked. If the demotion conditions occur, the lamp will be turned off. It will be held on until DTC demotion checking is completed.
   – "Non critical" faults are those that can occur temporarily e.g. vehicle battery under voltage. The lamp is therefore turned off when the DTC demotion condition occurs.

System Fault

1. General Function
   – The system monitors a number of inputs across time in order to determine that a fault exists.
   – Faults are prioritized according to which has the most likely cause.
   – Maximum fault store is equal to 15.
   – Certain faults are not covered through DTC. The main ones are :
     a. Sensor thermal shutdown (over 257°F/ 125°C).
     b. Ignition Line stuck ; requires observation of lamps at Ignition ON to diagnose.

Suspension System

Description

1. General description
   WU is a sensor placed in the tire that reports pressure and temperature.
   The WU is mounted inside the wheels, fixed to the valve. The angle between the valve and the housing of the WU is variable.
   This allows adaptation to various types of rims.
   The Wheel Unit is made of a PCB supporting the electronic hardware and encapsulated inside a housing which is potted with polyurethane.
   It is self-powered by a battery and includes all systems for parameter measurement (pressure, temperature and centrifugal acceleration and optionally rotation direction), RF transmission and LF detection.
   To achieve the specified battery lifetime, the WU supports various measurement and transmission timings, depending on WU operation mode.
   For RF transmission, WU uses an internal antenna.
2. First Block Mode
   : When vehicle start driving, Sensor enter Mode First Block.
   Typical period of RF emissions is 16 sec. for 40 times for Auto-learning and Auto-location function.
3. Driving Mode
   : After 19 min. parking and then finishing Mode First Block mode, WU enter Driving mode.
   Typical period of RF emissions are 64 sec above 4g vehicle speed.
4. Parking Mode

: at below 3g Vehicle speed, enter Parking mode.
Typical periodicities of RF emissions are 13 hours.

Replacement

1. Remove the valve core and deflate the tire.
2. Push the tire as illustration below by using tive change machine.

3. Loosen the nut and then remove the TPMS sensor.
4. The valve during transportation (air inlet portion of the silver) deviated from its original location be sure to check whether the original position of the valve (metal brackets) are assembled in indented state.
5. While tightening the nut on the valve as not to deviate from the fixed position while rotating the valve to a fixed location (metal brackets to fit inside) and push.
6. Contact with the rim so that the valve washer seals the valve hole put into.

7. Housing with two fingers holding the valve in the axial direction with one finger and push the valve.

8. Housing, the state must be visible laser marking.

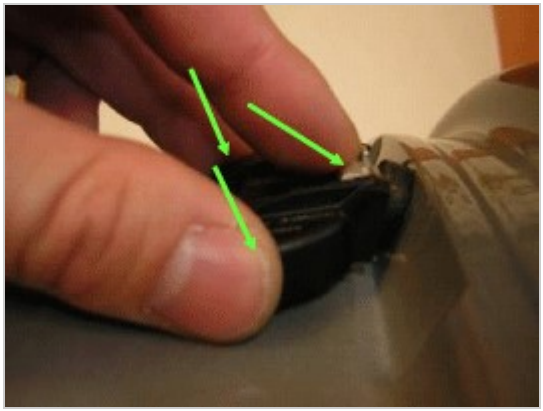

9. When the valve is fully inserted so that the contact between the sensor and the rim while keeping hands on the wheel nut tightening will start Wed.

10. While maintaining the position of the valve and the sensor is mounted nut.

Tightening torque :
68.6 - 88.3 N.m (7.0 - 9.0 kgf.m, 50.6 - 65.1 lb-ft)

11. Remove the tire change machine.
12. Inject air into the tire until the beads are in the correct position.

Tier pressure :2.5 kg/cm³ (36 psi)

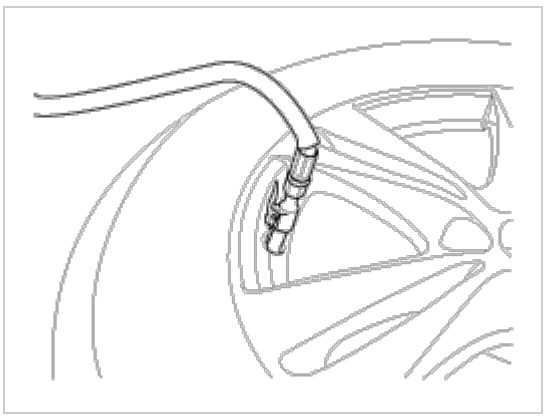

13. In the case of TPMS sensor failure, TPMS sensor needs learning. Faulty sensor is replaced new units, conduct learning of TPMS sensors.

Inspection

After installing TPMS sensor test methods Thai

1. Sealing washer on the outside rim of hole to be compressed.
2. The lower part of the valve housing, a fixed place (no metal brackets) should be located.
3. Housing is at least one or more points on the surface of the rim should contact.
4. The rim of the housing mounting height shall not exceed the height of the chin.

[Normally]

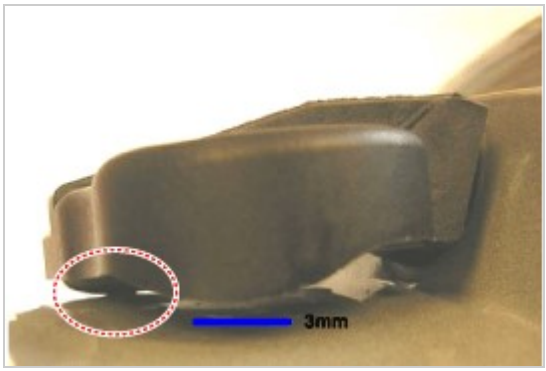

[Faulty]

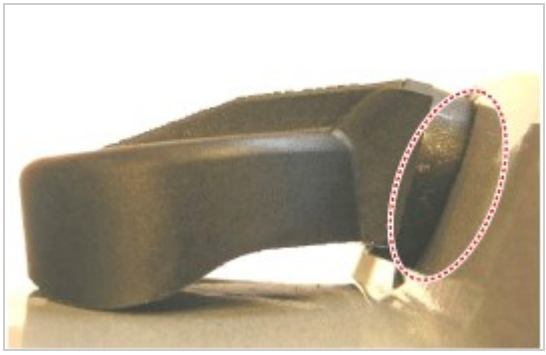

Diagnosis procedure by using diagnostic device

As manual for diagnosis methods by using diagnosis device, the main contents are as follows:

1. Connect self-diagnosis connector(16pins) located in the lower of driver side crash pad to self-diagnosis device, and then turn the self-diagnosis device after key is ON.
2. Select the "vehicle model" and "TPMS" on GDS vehicle selection screen, then select OK.

Diagnostic Procedure Using a Diagnostic Instrument

The following section describes how to diagnose faults using a diagnostic instrument.

1. Connect the diagnostic instrument to the self-diagnostic connector (16-pin) beneath the crash pad on the side of driver"s seat, and then turn on the ignition to activate the diagnostic instrument.
2. In the GDS Vehicle Type Selection menu, select "Vehicle Type" and "TPMS" System, and then opt for "OK."

[Initial Screen for Sensor ID Registration]

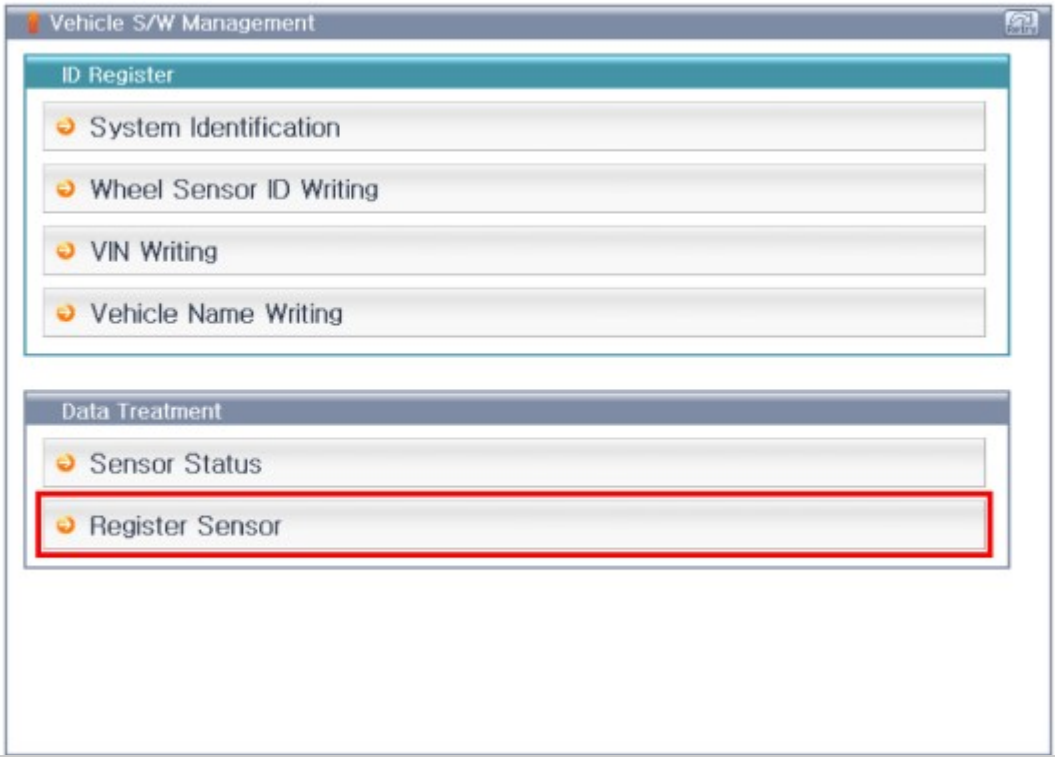

[Register Sensor function description]

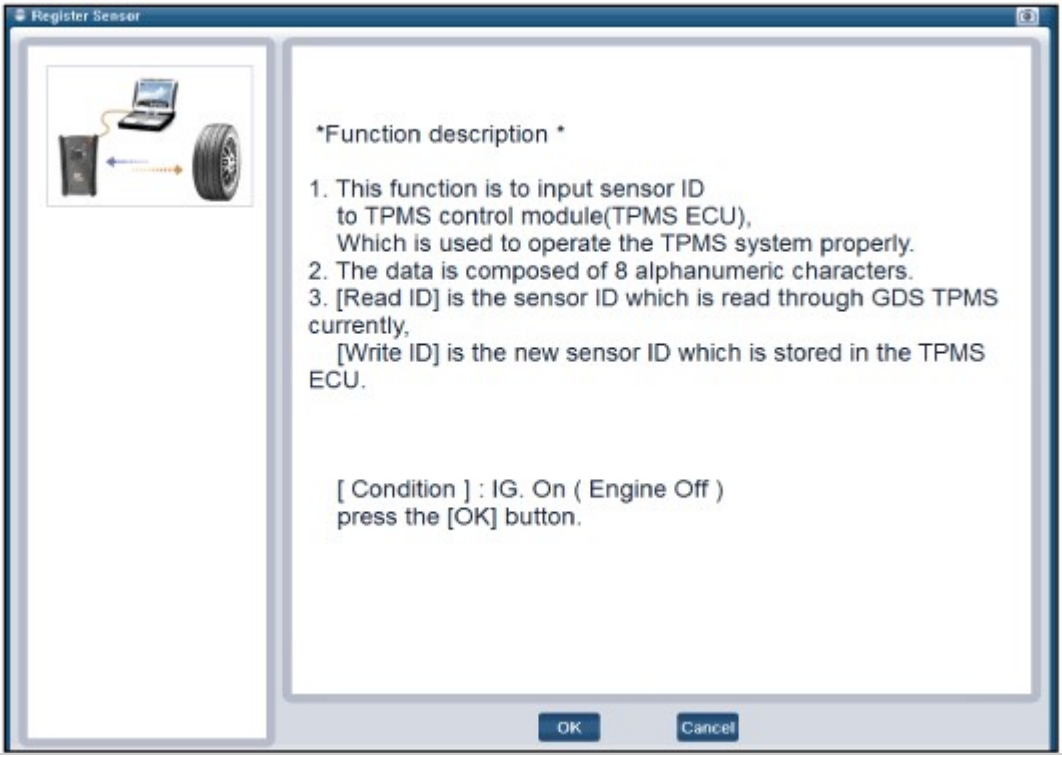

[Preparation phase sensor measurements]

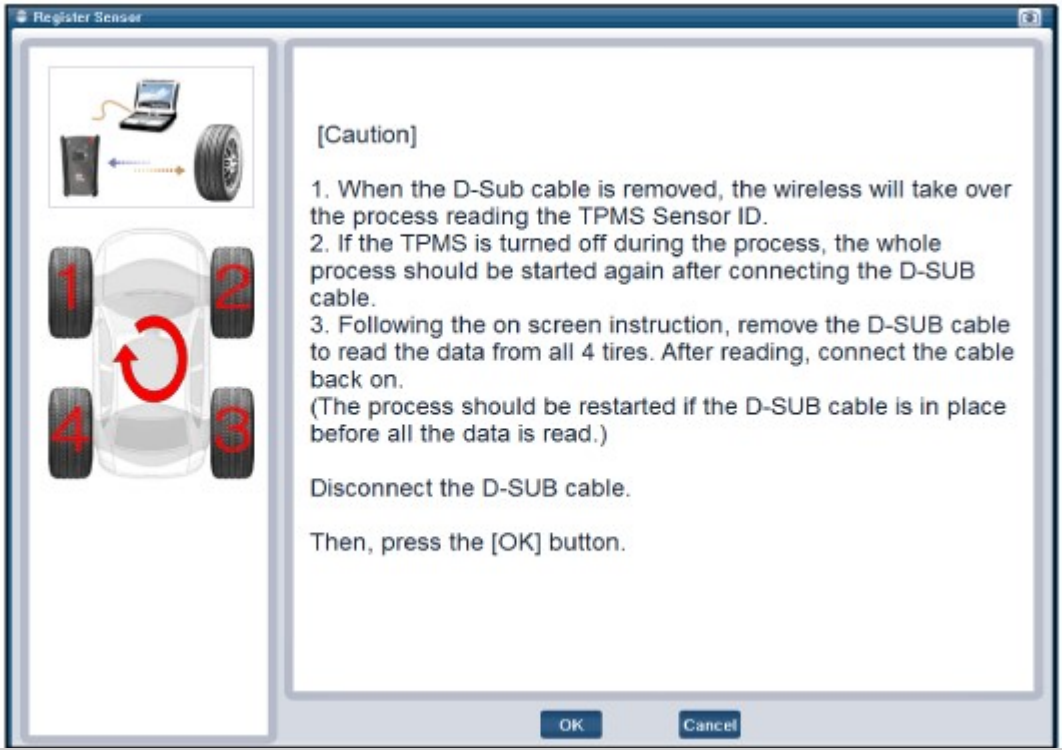

[Sensor register method 1]

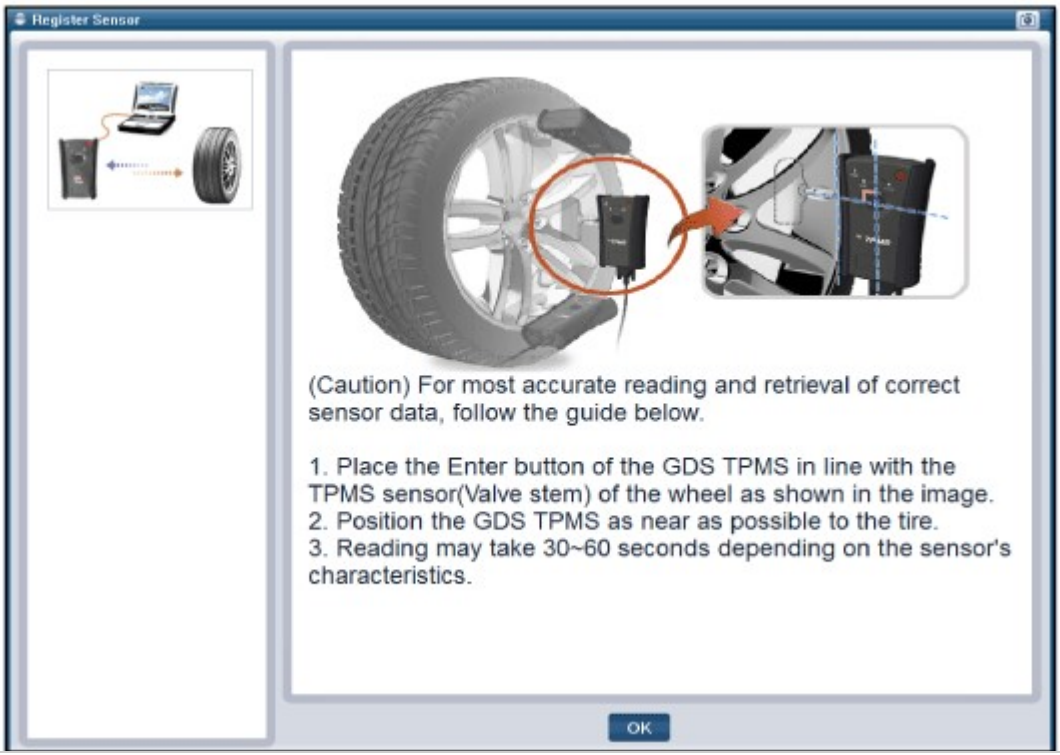

[Sensor register method 2]

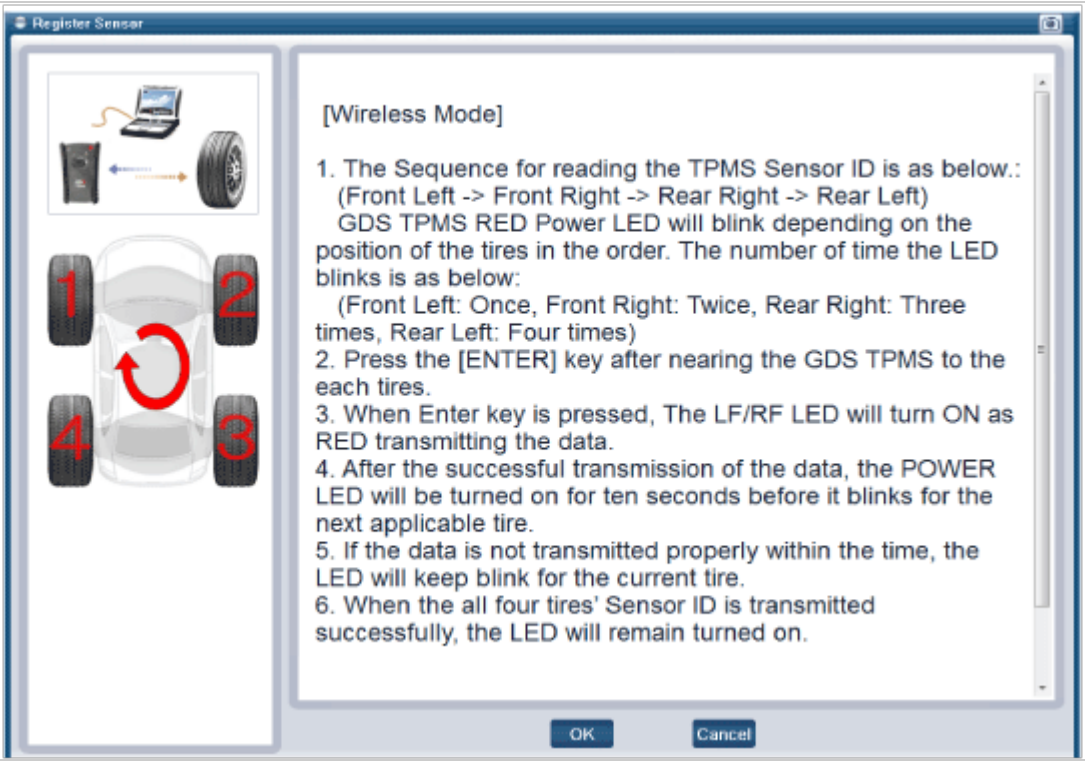

[Sensor register method 3]

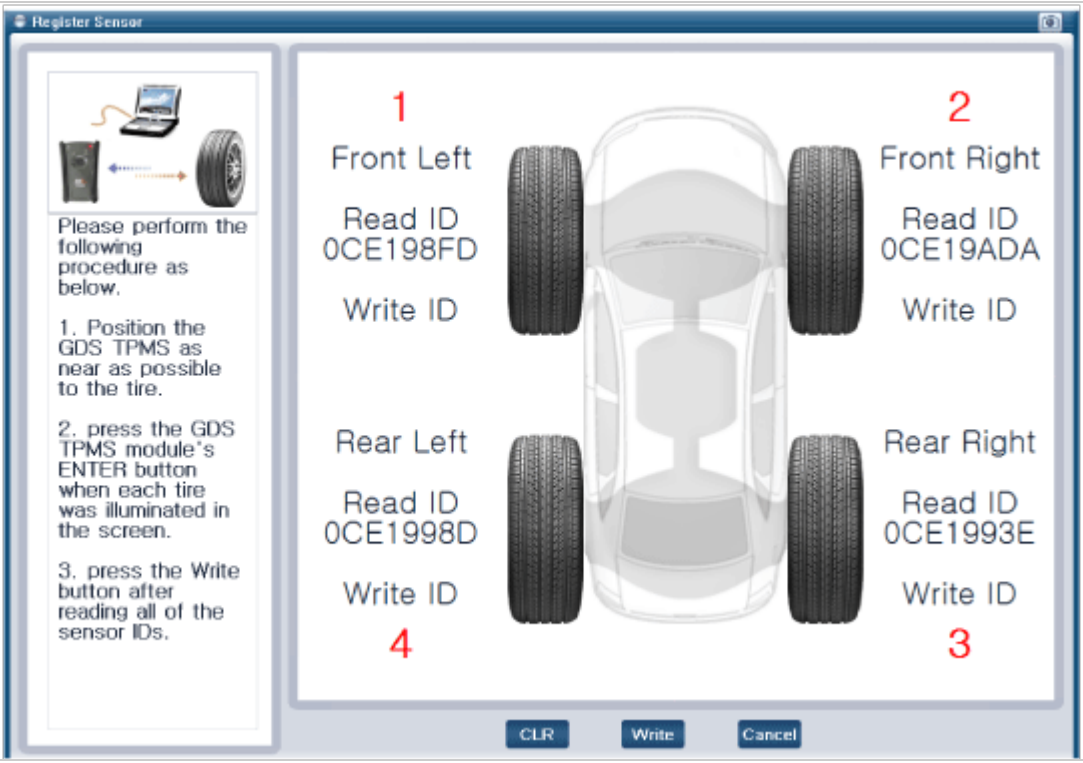

[Sensor register method 4]

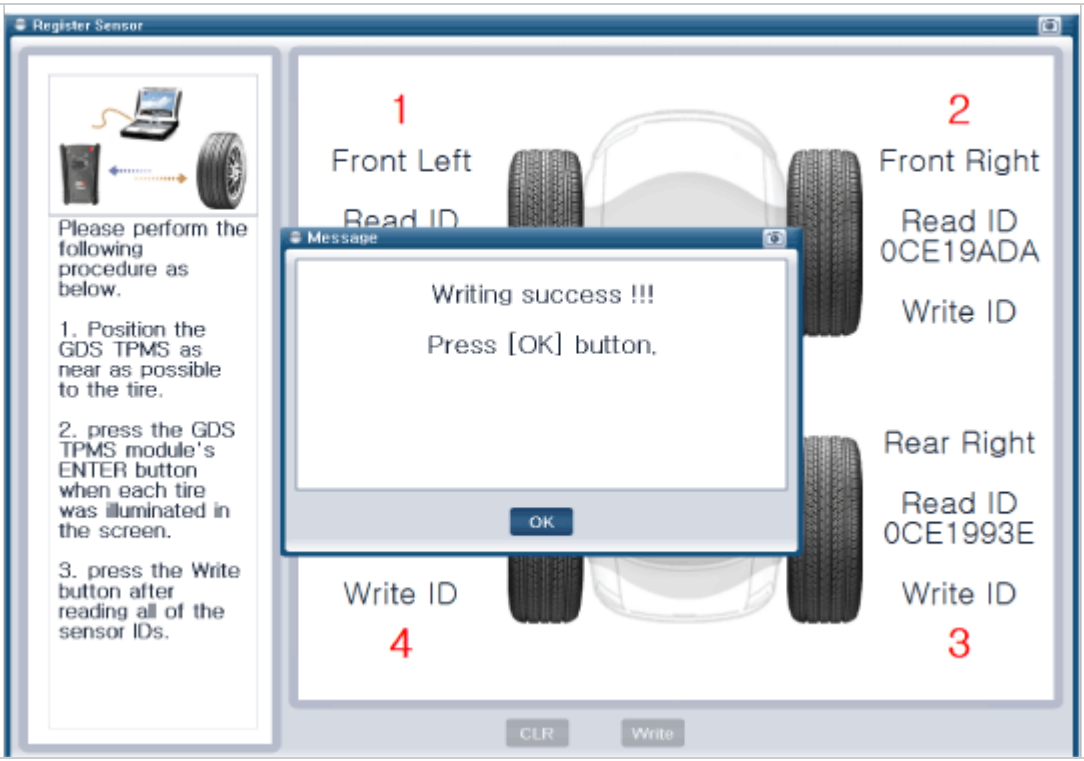

[Sensor register method 5]

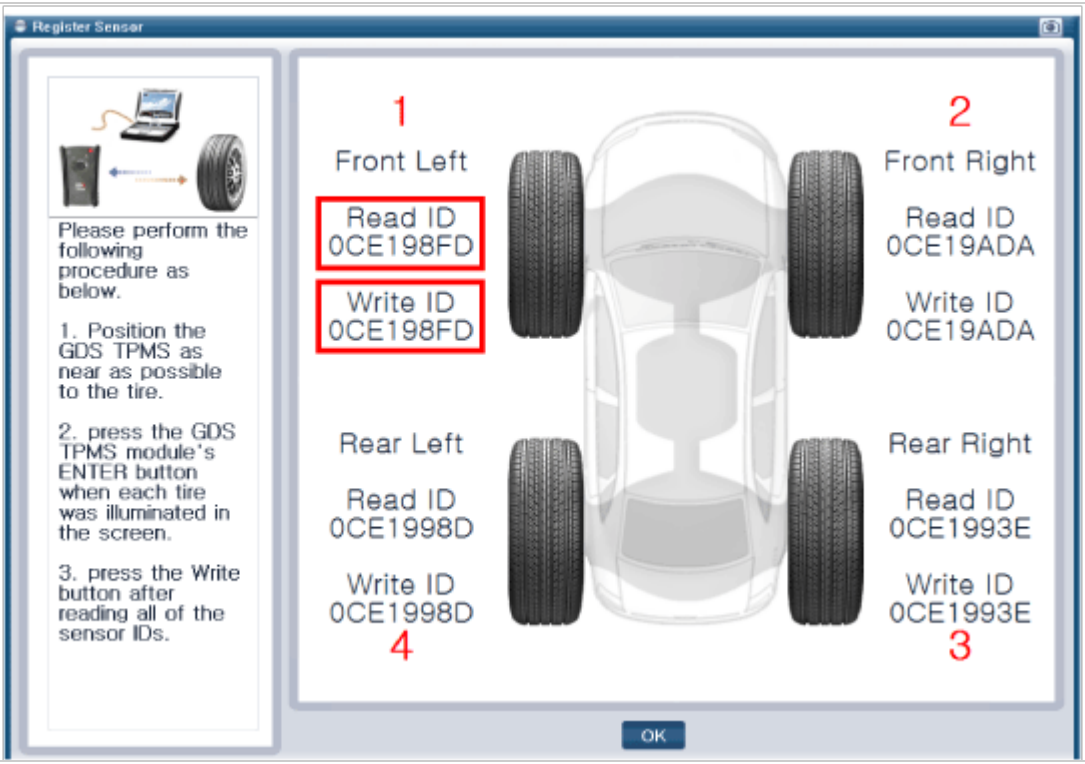

NOTICE

- Make sure that the read ID matches the written ID.
- After successfully registering the sensor, proceed to "Sensor Wireless Information" to ensure that the sensor functions correctly.

[Sensor Status initialization]

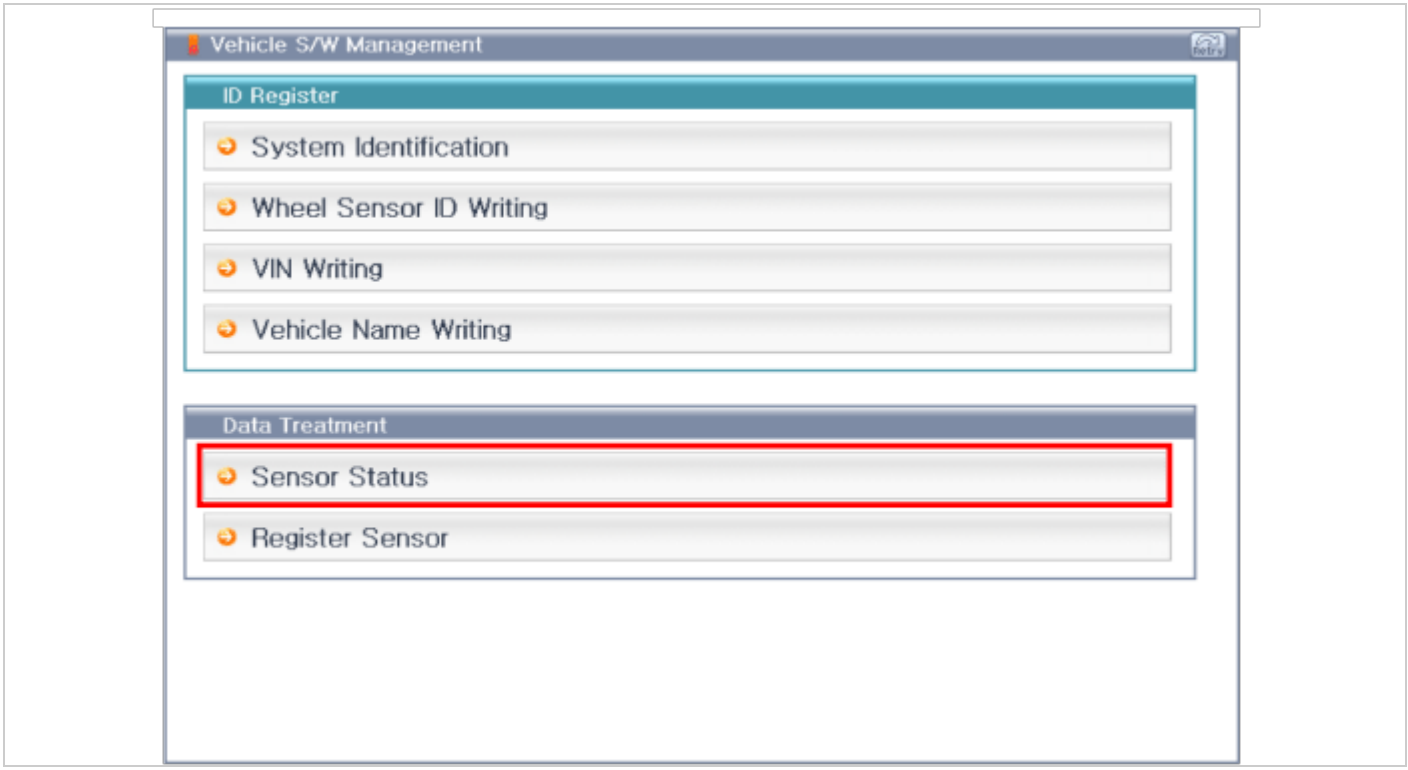

[Sensor function description]

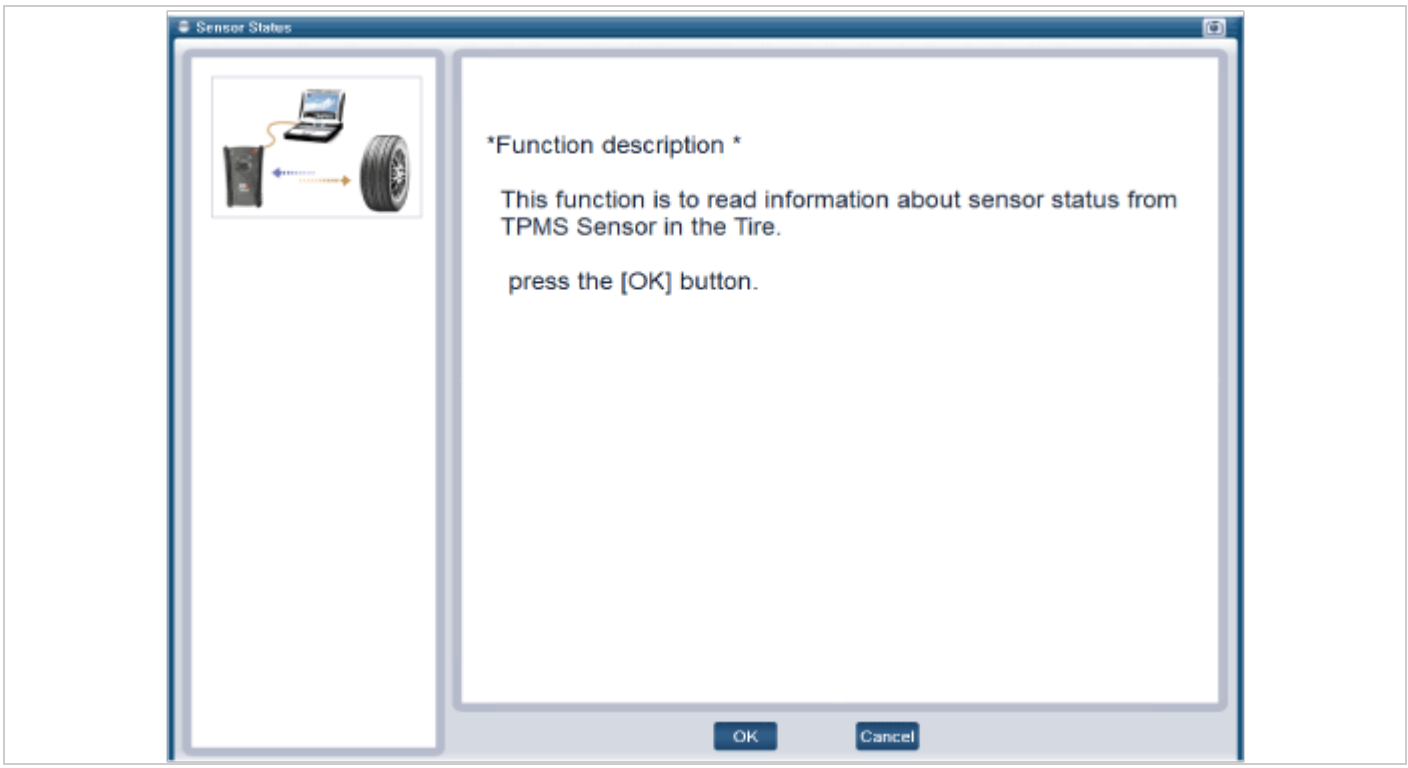

[Preparation phase sensor measurements]

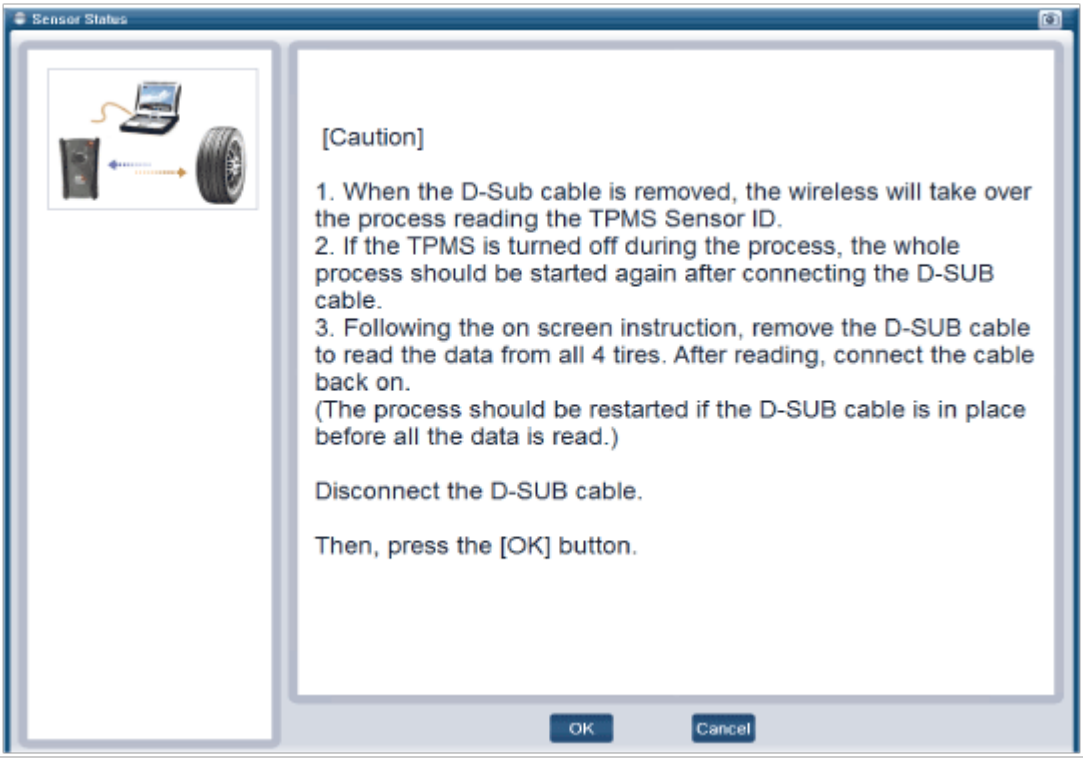

NOTICE

- In North America, the cable is measured separately.
- In Domestic/General(European) area, the cable is measured without separation.

[Sensor measurements 1]

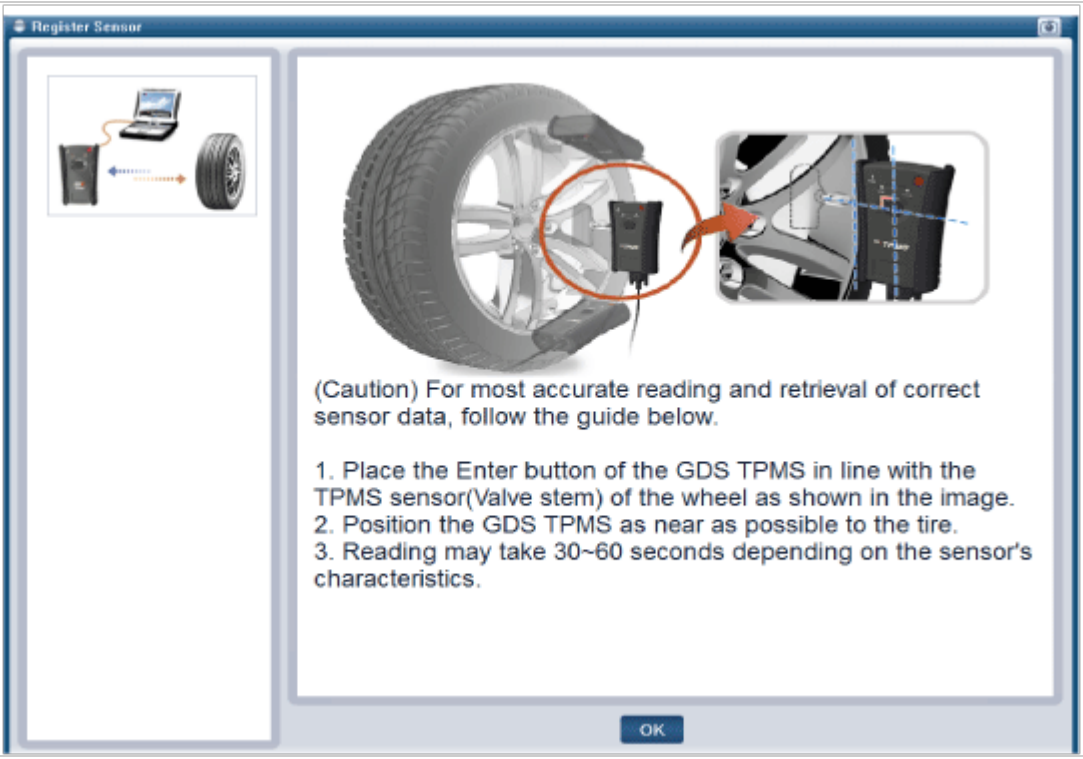

[Sensor measurements 2]

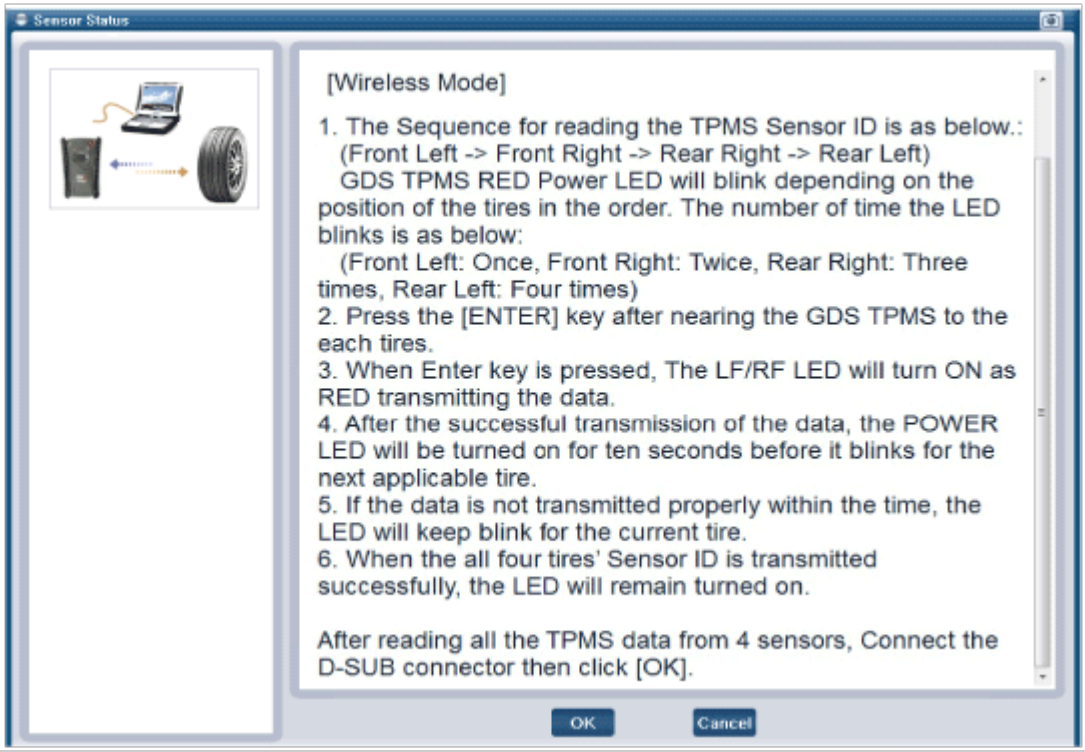

[Sensor Status]

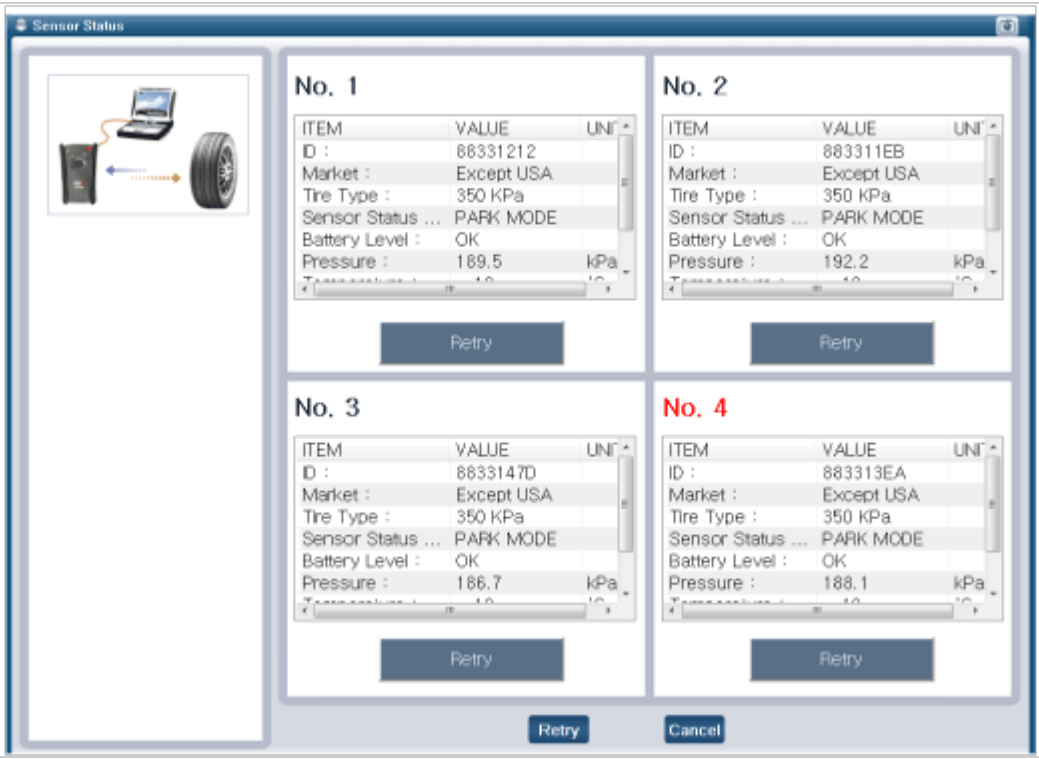

NOTICE

- Check each sensor component to ensure that it functions correctly.
- Replace any tires or sensors that do not function correctly, proceed to the sensor registration procedure, and check if the sensors function correctly.

Description

TPMS Receiver :BCM(body control module) integrated management

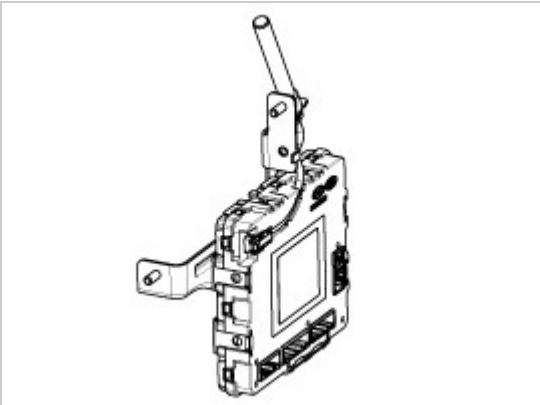

1. Mode
   (1) Virgin State
      – The receiver as a sole part is shipped in this state. Replacement parts should therefore arrive in this state.
      – In this state, there is no Auto-Location, no sensor wake-up, no sensor monitoring and no DTC monitoring.
      – The state indicates that platform specific parameters must be written to the receiver and that sensors are un-learned.
   (2) Normal State
      – In order for tire inflation state and DTC monitoring to occur, the receiver must be in this state.
      – In this state, automatic sensor location / learning is enabled.

2. Overview
   – Learn TPMS sensor for under inflation monitoring automatically.
   – Uses sensor information, distance travelled, background noise levels, Auto-learn status, short / open circuit output status, vehicle battery level, internal receiver states to determine if there is a system or a vehicle fault.

Operation

1. General Function
   – Auto-learn takes place only once per Ignition cycle.
   – On successful completion, 4 road wheel sensor ID"s are latched into memory for monitoring.
   – Until Auto-learn completes, previously learned sensors are monitored for under inflation / leak warnings.
2. General Conditions to Learn New Sensors :
   – Receiver must determine that it is confident that sensor is not temporary :
      a. Uses vehicle speed.
      b. Uses confidence reduction of previously learned sensors.
   – Typical time at driving continuously over 15.5 mph(25 kph) to learn a new sensor is up to 20 minutes.
3. General Conditions to Un-Learn a sensor that is removed :
   – It takes less than 20 minutes at 15.5 mph(20 - 30 kph).
   – Confidence reduction is dependent on time which vehicle is driven at speed greater than or equal to 12.4 mph (20 - 30 kph).

Suspension System

Removal

1. Disconnect the negative (-) battery terminal.
2. Remove the glove box.
   (Refer to Body - "Glove Box Upper Cover Assembly")
3. Remove the smart key unit.
   (Refer to Body - "Smart Key Unit")
4. Disconnect the body control module connectors (A).

5. Remove the body control module (A) after loosening the mounting nuts.

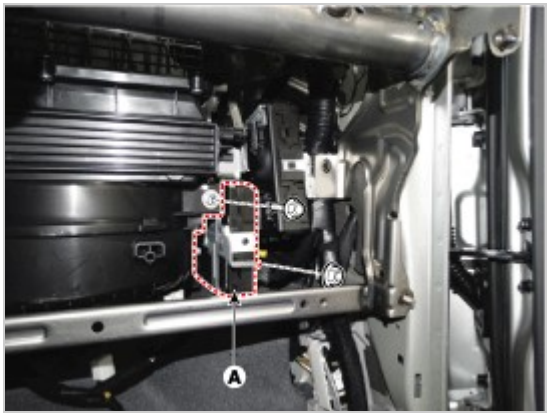

Installation

1. Install the body control module.
2. Install the glove box upper cover assembly.
3. Connect the negative (-) battery terminal.

Adjustment

Diagnosis procedure by using diagnostic device

As manual for diagnosis methods by using diagnosis device, the main contents are as follows :

1. Connect self-diagnosis connector(16pins) located in the lower of driver side crash pad to self-diagnosis device, and then turn the self-diagnosis device after key is ON.
2. Select the "vehicle model" and "TPMS" on GDS vehicle selection screen, then select OK.

[Sensor ID Writing]

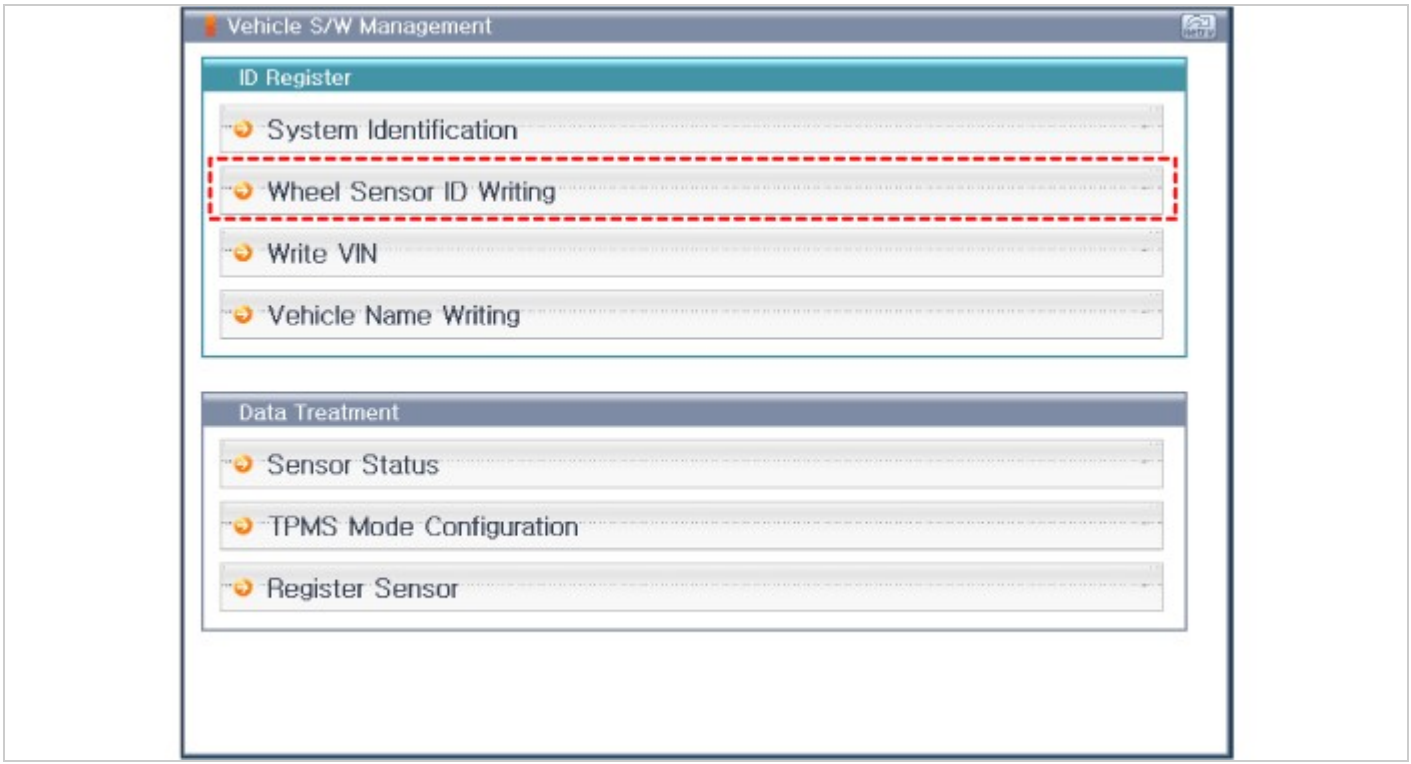

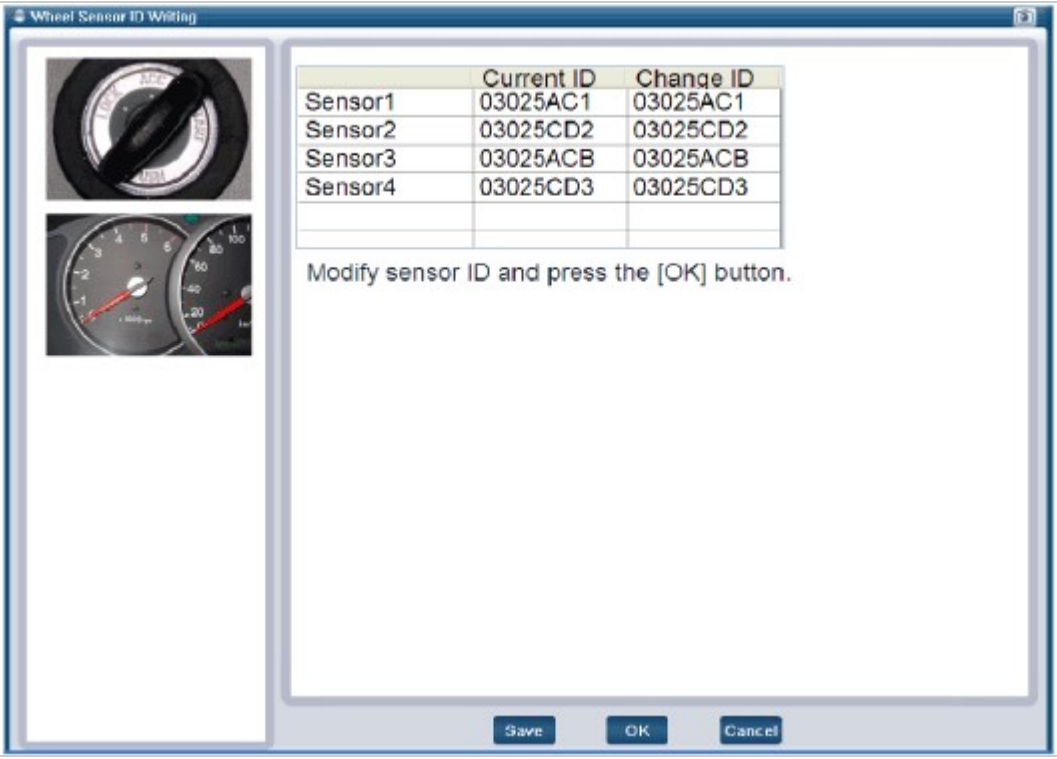

[Vehicle name input initialization]

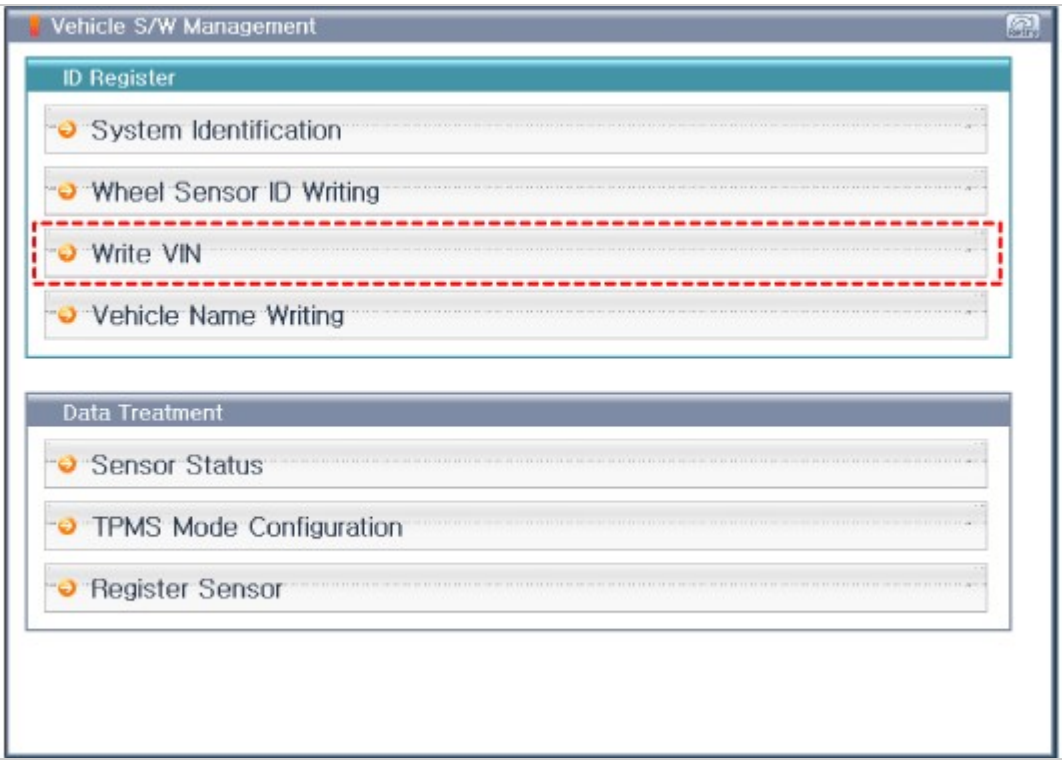

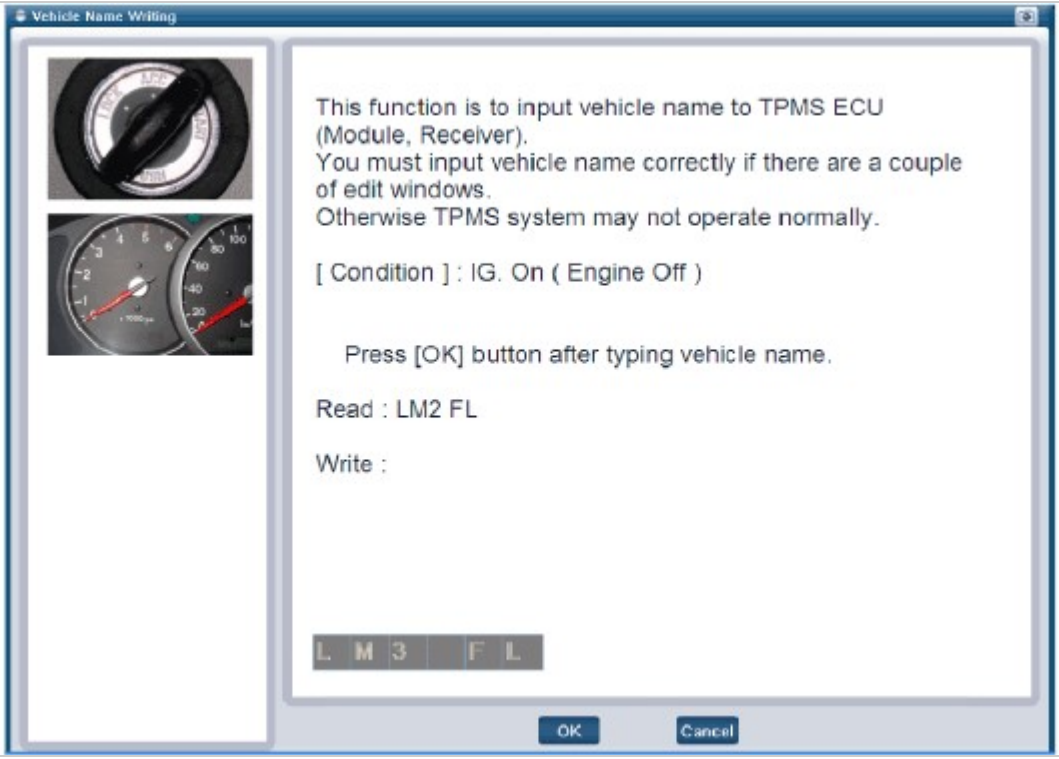

[VIN input initialization]

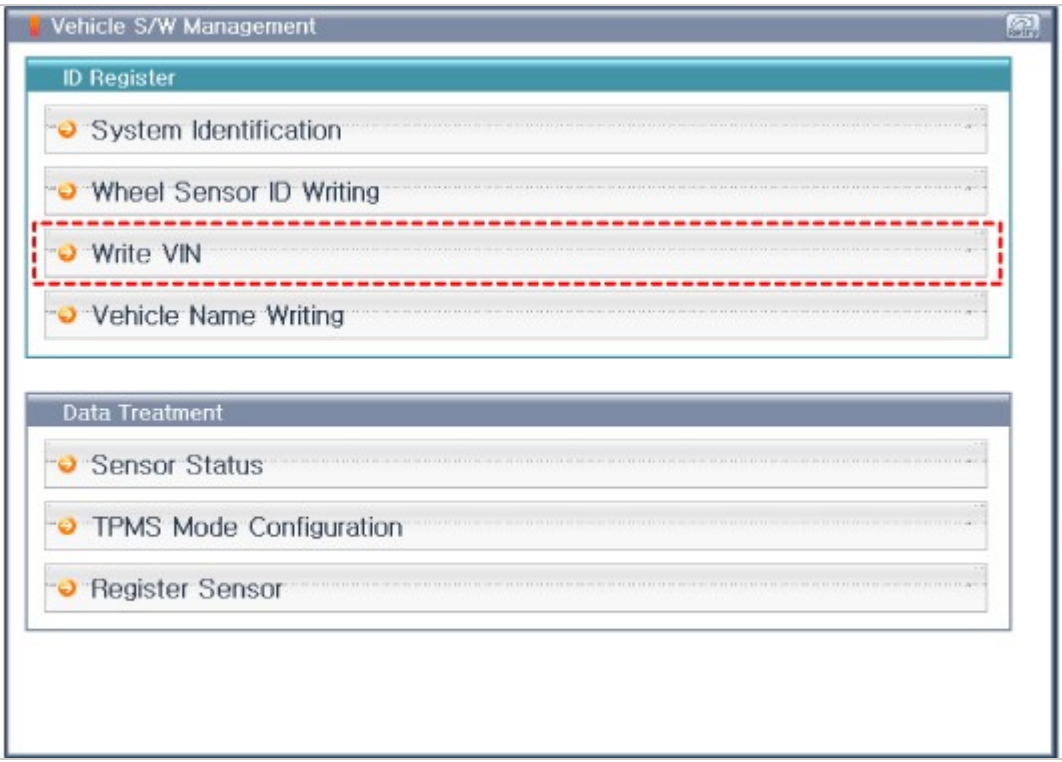

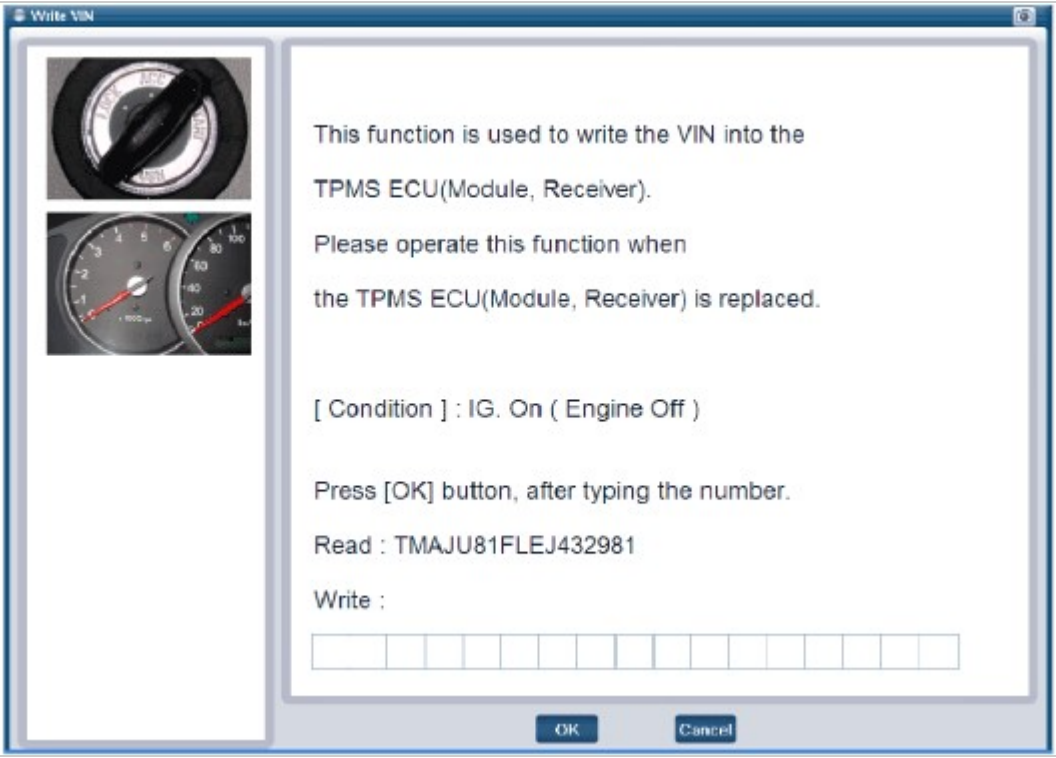
Write VIN
This function is used to write the VIN into the
TPMS ECU(Module, Receiver).
Please operate this function when
the TPMS ECU(Module, Receiver) is replaced.
[Condition] : IG. On (Engine Off)
Press [OK] button, after typing the number.
Read : TMAJU81FLEJ432981
Write :
OK
Cancel