Safety Precaution

Precautions to take before servicing high voltage system

DANGER

- Since hybrid vehicles contain a high voltage battery, if the high voltage system or vehicles are handled incorrectly, this might lead to a serious accidents like electric shock and electric leakage.

WARNING

- Be sure to shut off the high voltage by removing the safety plug before performing inspection or repairing the high voltage system.
  (Refer to "High Voltage Shut-off Procedures")
- The responsible worker keeps the removed safety plug to prevent the plug from being connected by mistake.
- Do not keep any metal objects (watch, ring etc.) while working on the high voltage system, which it can cause serious accidents like electric shock.
- Before beginning work on the high voltage system, the worker should wear personal protective equipment to prevent safety accidents.
  (Refer to "Personal Protective Equipment")
- Never allow workers who are not wear personal protective equipment to touch the high voltage system. High voltage components should be covered with an insulation sheet to prevent safety accidents.
- Use insulation tools when working on the high voltage system.
- Put the removed high voltage components on the insulation mat.

Information

- All the high voltage wiring and connectors are orange.
- A caution label for high voltage is attached to the high voltage components.
- High voltage components :
  High Voltage Battery Pack Assembly, Power Relay Assembly (PRA), BMS ECU, Hybrid Power Control Unit (HPCU), Hybrid Drive Motor, HSG, Electric A/C Compressor, Low DC/DC Converter (LDC), Power Cable, Electric Compressor etc.

CAUTION

- Inform of danger of high voltage by putting the "high voltage caution" on the vehicle as image below.

SAMPLE

DANGER

High Voltage : Do not touch during operation.

Person in charge : _____

Copy this page and put it after folding on the roof of the vehicle in service.

DANGER

High Voltage : Do not touch during operation.

Person in charge : _____

Personal Protective Equipment

Name	Illustration	Description
Insulation glove		Used when inspecting or working on the high voltage components [Insulation performance : 1000V / 300A or above]
Insulation shoes		Used when inspecting or working on the high voltage components

Insulation clothes		Used in the case below • During Removal & installation or inspection of the high voltage battery terminals or wiring, which spark might happen. • During working on the high voltage battery pack assembly.
Insulation helmet	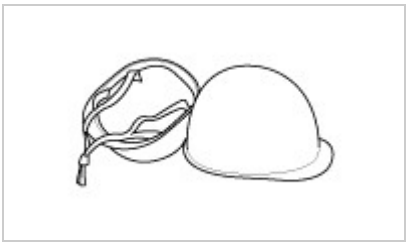	
Safety glasses		
Face shield		
Insulation mat	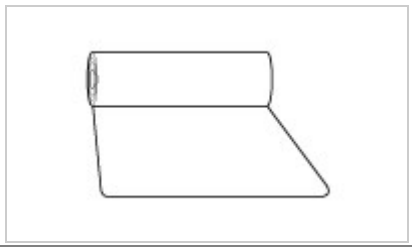	Putting the removed high voltage components on the insulation mat to prevent safety accidents.
Insulation sheet	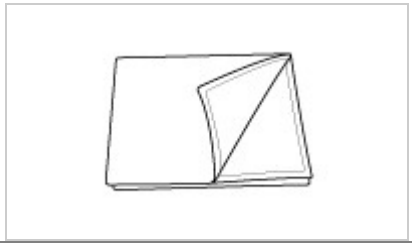	Covering the high voltage components with insulation sheet to prevent people who don’t wear the personal protective equipment from safety accidents.

Precautions to take when handling power cable

- Immediately insulate the high voltage terminal after reconnecting the terminal (use insulation tape).
- Tighten the high voltage terminal screw to spec torque.
- Be careful that (+) and (-) terminals do not come in contact when connecting or disconnecting power cable and busbar.

Precautions to take when handling high voltage battery

- When transporting high voltage battery, be sure to keep it flat and leveled. Failure to do so may decrease the battery performance and/or its life-span.
- High voltage battery"s performance may decrease if it is exposed to high temperature for a lengthy period. As a result, heat-treatment after painting must not exceed 70°C/ 30 minutes, or 80°C/ 20 minutes.

Precautions in case of fire on high voltage battery system

- If the fire occurs indoor, ventilate the area to let out hydrogen gas.
- ACB fire extinguisher is recommended for putting out the fire. (water may also be used).

Precautions in case of high voltage battery gas or electrolyte leakage

-

Turn OFF the Start button. Keep the Smart Key at least 2 meters away from the vehicle to prevent unintended engine start.

- Gas is hydrogen and alkaline vapor. If the leakage is indoor, ventilate the area immediately and evacuate to a safe location.
- If the leaked liquid comes in contact with skin, immediately neutralize the affected area with boric acid solution, then clean with tap water or saline solution.
- If the leaked vapor or liquid gets in the eye, immediately clean the affected eye with water then get medical attention.
- If the gas leakage is caused by high temperature, then do NOT use the battery until the high voltage battery fully cools down to room temperature.

Precautions when handling the vehicle after an accident

- Be sure to wear insulated gloves (or rubber gloves), protective goggles, insulated suite, and insulated boots.
- Do NOT touch bare cable under any condition.
  (Refer to "Precautions when handling power cable")
- In case of vehicle fire, put out the fire with ABC extinguisher. Do NOT use water (usage of large volume of water is okay, but small volume can worsen the situation).
- If more than half of the vehicle is submerged, then do NOT go near the Safety Switch or other high voltage related components. If such a component must be accessed, then move the vehicle to the safe location first before handling the component.
- Gas is hydrogen and alkaline vapor. If the leakage is indoor, ventilate the area immediately and evacuate to a safe location.
- If the leaked liquid comes in contact with skin, immediately neutralize the affected area with boric acid solution, then clean with tap water or saline solution.
- Refer to "High voltage cut-off procedure" if the high voltage needs to be cut off.

Preparations when servicing the accident vehicle

- Be sure to wear insulated gloves (or rubber gloves), protective goggles, insulated suite, and insulated boots.
- Boric Acid Power or Solution
- ABC Extinguisher
- Towel for cleaning electrolyte
- Vinyl tape (for insulating terminal)
- Mega ohm tester (for checking high voltage)

Precautions in case HEV is left unattended for a lengthy period

- Turn OFF the Start button. Keep the Smart Key at least 2 meters away from the vehicle to prevent unintended engine start.
- We recommend that HEV is driven at least 1 time for over 30 minutes every 2 months to protect and manage the high voltage battery (inquire at relevant team in HMC).
- When inspecting or exchanging the auxiliary battery, check high voltage battery SOC reset related problems.

Hybrid Vehicle Refrigerant Recovery / Charging Precautions

- Since the electric compressor uses high-voltage, you should use POE oil which have high Volumetric Resistivity.
- Do not use the same A/C recovery / charging station as conventional belt-driven compressors.

WARNING

- If the POE oil of the system gets mixed with PAG oil, then dielectric breakdown due to decreased volumetric Resistivity can occur and inoperative A/C compressor may result, A/C compressor may not work

High Voltage Shut-off Procedures

WARNING

- Be sure to read and follow the "General Safety Information and Caution" before doing any work related with the high voltage system. Failure to follow the safety instructions may result in serious electrical injuries.
- Be sure to read and follow the "High Voltage Shut-off Procedures" before doing any work related with the high voltage system. Failure to follow the safety instructions may result in serious electrical injuries.

Information

- High voltage components :
  High Voltage Battery Pack Assembly, Power Relay Assembly (PRA), BMS ECU, Hybrid Power Control Unit (HPCU), Hybrid Drive Motor, HSG, Electric A/C Compressor, Low DC/DC Converter (LDC), Power Cable, Electric Compressor etc.

1. Turn the ignition switch OFF and disconnect the auxiliary 12V battery negative (-) terminal.

2. Remove the safety plug cover (A).

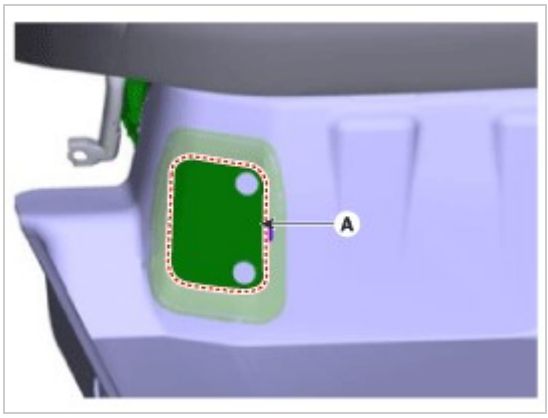

3. Unfasten the hook (A) and then remove the safety plug (C) by pulling the lever (B) to the direction of arrow.

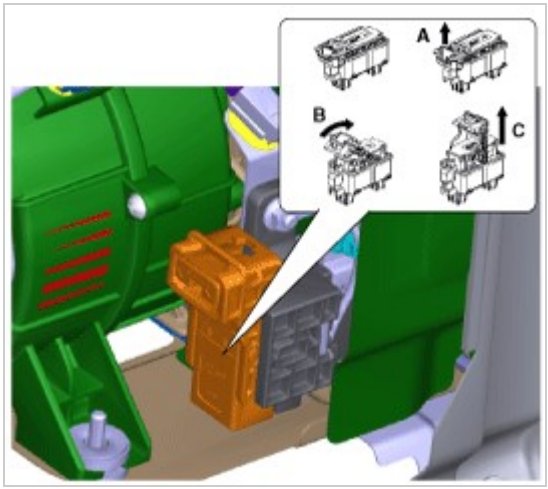

4. Wait for more than 5 minutes so that the capacitor in the high voltage system can be fully discharged.
5. Measure the voltage between the inverter terminals to check that the capacitor in the inverter is discharged completely.
   (1) Remove air cleaner assembly and air duct.
   (Refer to Engine Mechanical System - "Air Cleaner")
   (2) Disconnect the inverter power cable (A).

Information

- Disconnect the inverter power cable as the procedures below.

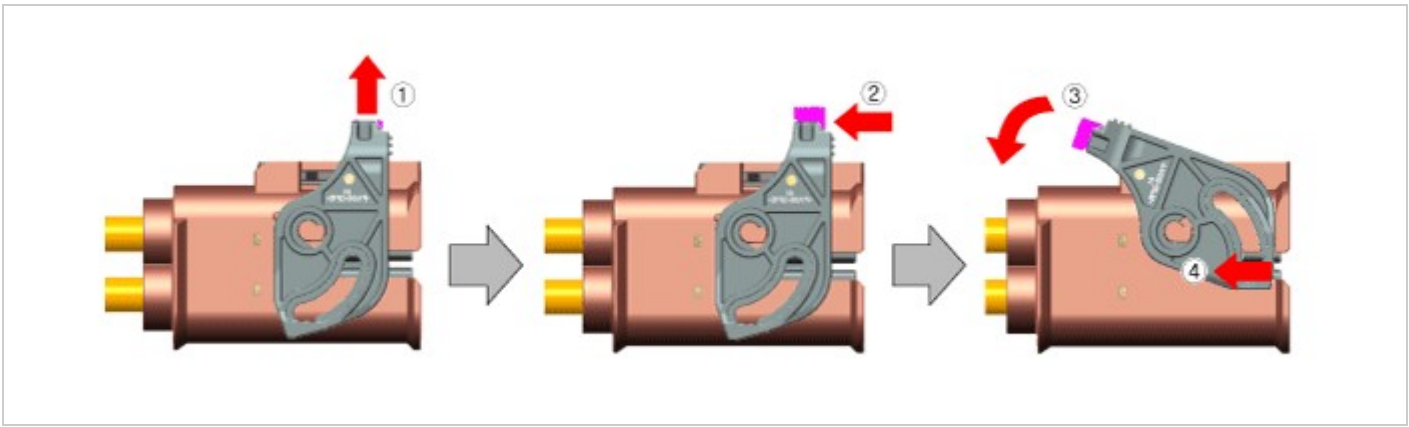

(3) Measure the voltage between the inverter (+) terminal and the inverter (-) terminal.

Less than 30V : High voltage circuit properly shut
More than 30V : Fault on high voltage circuit

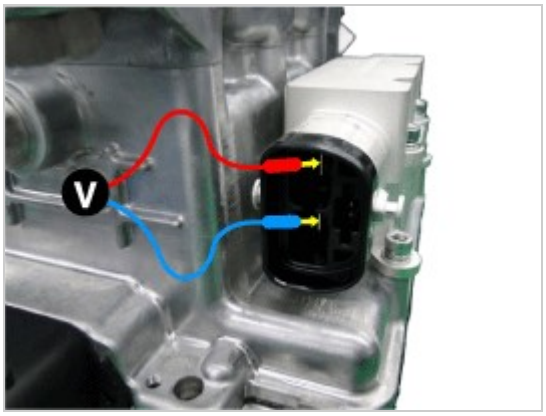

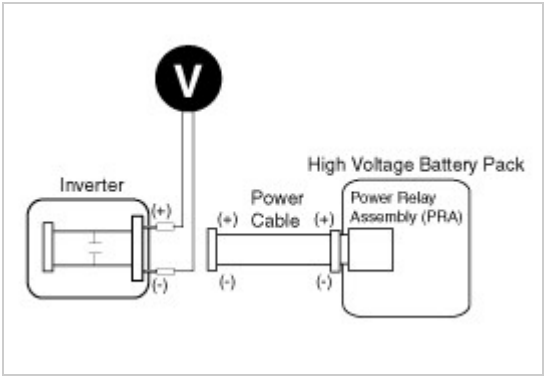

WARNING

- If measured more than 30V, check if the safety plug is removed completely.If measured more than 30V despite the safety plug is removed, there can be serious problems on the high voltage circuit. In this case, check DTC and never touch the high voltage system circuits.

Brake System

Specifications

Item		Specification
Front disc brake	Type	Ventilated disc
	Disc O.D.	Ø 280 mm (11.02 in)
	Disc thickness	22 mm (0.87 in)
	Caliper piston	Single
	Cylinder I.D.	Ø 57.2 mm (2.25 in)
Rear disc brake	Type	Solid disc
	Disc O.D.	Ø 262 mm (10.31 in)
	Disc thickness	10 mm (0.39 in)
	Caliper piston	Single
	Cylinder I.D.	Ø 33.18 mm (1.31 in)
Parking brake	Type	BIR (Ball-in-Ramp)
	Actuation	Lever

Specification (ESC)

Part	Item	Standard value	Remark
Integrated Brake Actuation Unit (IBAU)	System	4 Channel 4 Sensor (Solenoid)	Total control (ABS, EBD, TCS, ESC)
	Type	Valve relay integrated type	
	Operating Voltage	10 - 15V	
	Operating Temperature	-40 - 120°C (-40 - 248°F)	
Active Wheel speed sensor	Supply voltage	DC 4.5 - 20V	
	Output current low	5.9 - 8.4 mA	
	Output current high	11.8- 16.8 mA	
	Output range	1 - 2500 Hz	

	Tone wheel	Front : 46 teeth, Rear : 46 teeth	
	Air gap	0.4 - 1.5 mm	
Pressure Source Unit (PSU)	System	3 piston pump/ high pressure accumulator system	
	Operating Voltage	10 - 15V	
	Operating Temperature	-40 - 120°C (-40 - 248°F)	

Service Standard

Items	Standard value
Brake pedal Full stroke	137.0 mm (5.39 in)
Stop lamp switch clearance	1.0 - 2.0 mm (0.04 - 0.08 in)
Brake pedal free play	3 - 8 mm (0.12 - 0.31 in)
Front brake disc thickness	22.0 mm (0.87 in)
Front brake disc service limit	20.0 mm (0.79 in)
Front brake disc pad thickness	17.0 mm (0.67 in)
Front brake disc service limit	8.0 mm (0.31in)
Rear brake disc thickness	10.0 mm (0.39 in)
Rear brake disc service limit	8.4 mm (0.33 in)
Rear brake disc pad thickness	15.0 mm (0.60 in)
Rear brake disc service limit	7.0 mm (0.28 in)

Tightening Torques

Items	N.m	kgf.m	lb-ft
Tire wheel hub nut	107.9 - 127.5	11.0 - 13.0	79.6 - 94.0
Air bleeding screw	6.9 - 12.7	0.7 - 1.3	5.1 - 9.4
Brake tube flare nuts	13.7 - 16.7	1.4 - 1.7	10.1 - 12.3
Front caliper guide rod bolts	21.6 - 31.4	2.2 - 3.2	15.9 - 23.1
Rear caliper guide rod bolts	21.6 - 31.4	2.2 - 3.2	15.9 - 23.1
Front caliper assembly to knuckle	98.1 - 117.7	10.0 - 12.0	72.3 - 86.8
Rear caliper assembly to knuckle	63.7 - 73.5	6.5 - 7.5	47.0 - 54.2
Brake hose to caliper	24.5 - 29.4	2.5 - 3.0	18.1 - 21.7
Brake pedal member bracket bolts	16.7 - 25.5	1.7 - 2.6	12.3 - 18.8
Brake pedal mounting nut	12.7 - 19.6	1.3 - 2.0	9.4 - 14.5
Wheel speed sensor mounting bolt	7.8 - 11.8	0.8 - 1.2	5.8 - 8.7
IBAU bracket mounting bolts	10.8 - 12.7	1.1 - 1.3	8.0 - 9.4
IBAU Brake Tube Flare nuts	13.7 - 16.7	1.4 - 1.7	10.1 - 12.3
PSU Bracket mounting bolts	19.6 - 29.4	2.0 - 3.0	14.5 - 21.7

Lubricants

Items	Recommended	Quantity
Brake fluid	DOT 3 or DOT 4	As required
Brake pedal bushing and bolt	Chassis grease	As required
Parking brake shoe and backing plate contacting surface	Heat resistance grease	As required

Special Service Tools

Tool (Number and Name)	Illustration	Use
09581-2T100 Piston expander		Spreading the front and rear disc brake piston.
09580-3D100 Air bleeding tool		Used when air bleeding brake system

	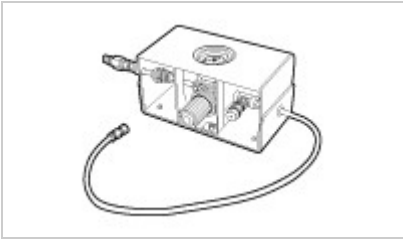	
0k585-E8100 Air bleeding tool	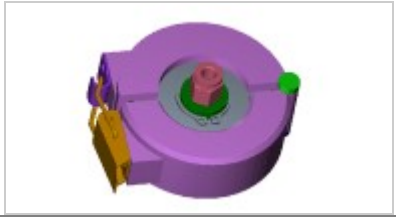	Used when air bleeding brake system
09580-0U000 Brake piston adjuster	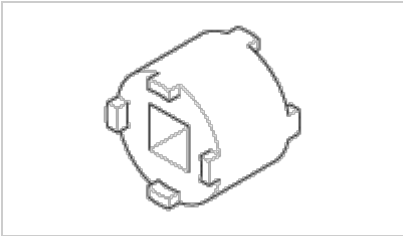	Removal and installtion of the rear disc brake piston.

Brake System

Troubleshooting

Symptom	Suspect Area	Reference
Lower pedal or spongy pedal	1. Integrated Brake Actuation Unit (Air in)	air·bleed
	2. AHB system (Fluid leaks)	replace
	3. Piston seals in IBAU (Worn or damaged)	replace
Brake drag	1. Brake pedal free play (Minimum)	adjust
	2. Pad or lining (Cracked or distorted)	replace
	3. Piston (Stuck)	replace
	4. Piston (Frozen)	replace
	5. Anchor or Return spring (Inoperative)	replace
	6. Master cylinder (Inoperative)	replace
	7. IBAU (Inoperative)	replace
Brake pull	1. Piston (Sticking)	replace
	2. Pad or lining (Oily)	replace
	3. Piston (Frozen)	replace
	4. Disc (Scored)	replace
	5. Pad or lining (Cracked or distorted)	replace
Hard pedal but brake inefficient	1. Brake system (Fluid leaks)	repair
	2. Brake system (Air in)	air·bleed
	3. Pad or lining (Worn)	replace
	4. Pad or lining (Cracked or distorted)	replace
	5. Rear brake shoe clearance (Out of adjustment)	adjust
	6. Pad or lining (Oily)	replace
	7. Pad or lining (Glazed)	replace
	8. Disc (Scored)	replace
	9. IBAU (Inoperative)	replace
	10. PSU (Inoperative)	replace
Noise from brake	1. Pad or lining (Cracked or distorted)	replace
	2. Installation bolt (Loosen)	adjust
	3. Disc (Scored)	replace
	4. Sliding pin (Worn)	replace
	5. Pad or lining (Dirty)	clean
	6. Pad or lining (Glazed)	replace
	7. Brake pad shim (Damage)	replace
Brake fades	1. Pad or lining (Worn)	replace
	2. Master cylinder (Inoperative)	replace
Brake vibration, pulsation	1. Pedal free play	adjust

	2. Master cylinder (Inoperative)	replace
	3. Caliper (Damage)	replace
	4. Master cylinder cap seal	replace
	5. Damaged brake lines	replace
Heavey pedal (Halt)	1. Brake pedal sticking (lack of grease)	repair
	2. IBAU (Inoperative)	replace
Motor sounds and excessive time to braking when consecutive 2 or 3 times pushing brake pedal (In the case of that accumulator pressure increase rate is under 5bar/sec when checking sensor figures of AHB with GDS)	1. AHB system (air in)	air·bleed
	2. PSU (Inoperative)	replace
Excessive noise when pushing brake pedal	1. IBAU/PSU system (air in)	air·bleed

NOTICE

It is not the malfunction of brake when motor sound is noticed with followings.

- Repeated pushing brake pedal
- Pushing and releasing brake pedal with power off.
- Opening a door of driver side

It is not the malfunction of brake while a brake pedal seems inoperative with followings.

- Noise when pushing brake pedal fast
- Noise when pushing brake pedal consecutively

Operation and Leakage Check

Check all of the following items :

Component	Procedure
Integrated Brake Actuation Unit (IBAU) (A) and Pressure Source Unit (PSU) (B)	Check brake operation by applying the brakes during a test drive. If the brakes do not work properly, check the IBAU and PSU. Replace IBAU and PSU as an assembly if it does not work properly or if there are signs of leakage.
Piston cup and pressure cup inspection (B)	Check brake operation by applying the brakes. Look for damage or signs of fluid leakage. Replace the IBAU as an assembly if the pedal does not work properly or if there is damage or signs of fluid leakage.
Brake hoses (C)	Look for damage or signs of fluid leakage. Replace the brake hose with a new one if it is damaged or leaking.
Caliper piston seal and piston boots (D)	Check brake operation by applying the brakes. Look for damage or signs of fluid leakage. If the pedal does not work properly, the brakes drag, or there is damage or signs of fluid leakage, disassemble and inspect the brake caliper. Replace the boots and seals with new ones whenever the brake caliper is disassembled.

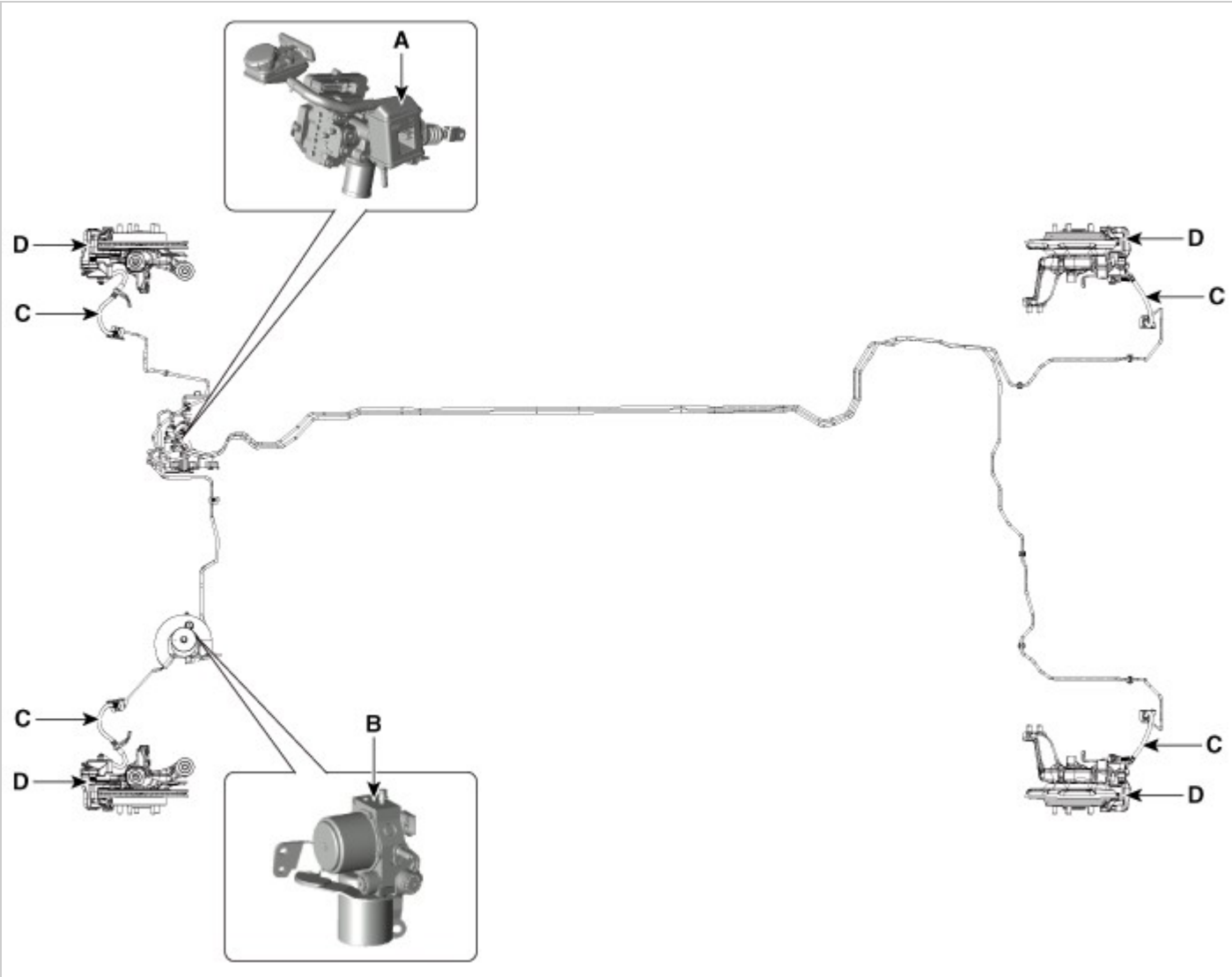

Bleeding of Brake System

Air Bleeding Tool Installation Procedure

⚠ CAUTION

- To prevent the brake fluid reservoir tank from beingdamaged and ensure the safety of worker, set thepressure of the gauge to the standard value beforeinstalling the SST.

1. Before installing the SST on the vehicle, close the airshut-off valve (A) to adjust the pressure gauge to thestandard value.

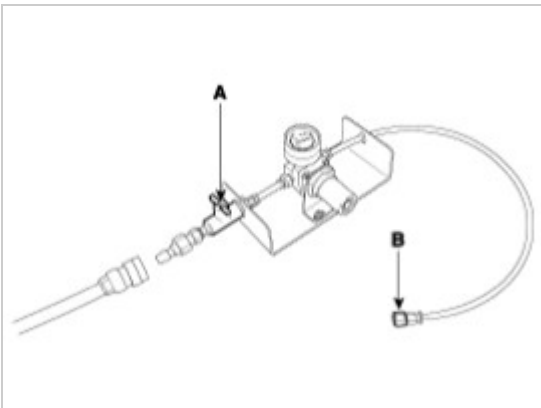

⚠ CAUTION

- For safety of worker and correct pressure setting,make sure that the plug (B) is installed correctly.

2. After connecting an air hose and opening the airshut-off valve (A), adjust the pressure gauge (B) to the standard value.

Standard pressure value :

0.3 - 0.5 MPa (43.5 - 72.5 psi)

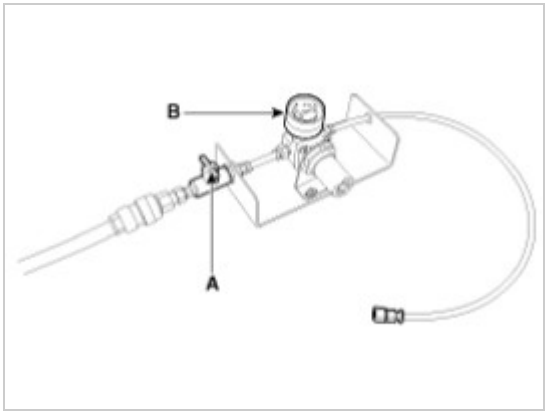

3. Close the air shut off valve (A) and remove the plug(B).

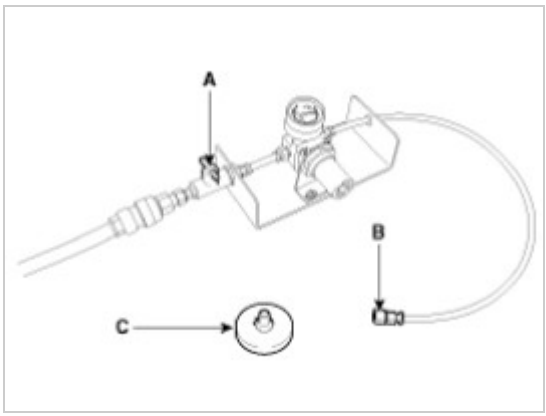

⚠ CAUTION

- For safety of worker, make sure that the air shut offvalve is closed and remove the plug.

4. Remove the brake reservoir tank cap.
5. Install the cap (A) of SST (0k585-E8100) on the reservoir tank.

6. Make sure the check valve is closed and connect SST (09580-3D100) (A) to the adapter (B).

Air Bleeding Tool Removal Procedure

1. To remove the SST (09580-3D100) from the vehicle, close the air shut-off valve (A).

2. Remove SST (09580-3D100) (A) and the cap of SST (0k585-E8100) (B) on the reservoir tank.

NOTICE

- To prevent backflow of brake fluid, be sure to open the air shut-off valve slowly then bleed air in the reservoir tank.

3. Install the brake reservoir tank cap.

Bleeding of Brake System

NOTICE

- Do not reuse the drained fluid.
- Always use genuine DOT3/DOT4 brake Fluid.
- Using a non-genuine DOT3/DOT4 brake fluid can cause corrosion and decrease the life of the system.
- Make sure no dirt or other foreign matter is allowed to contaminate the brake fluid.
- Do not spill brake fluid on the vehicle, it may damage the paint; if brake fluid does contact the paint, wash it off immediately with water.
- The reservoir on the master cylinder must be at the MAX (upper) level mark at the start of bleeding procedure and checked after bleeding each brake caliper. Add fluid as required.

1. Make sure the brake fluid in the reservoir is at the MAX (upper) level line.
2. Have someone slowly pump the brake pedal several times, and then apply pressure.
3. Loosen the right-rear brake bleed screw (A) to allow air to escape from the system. Then tighten the bleed screw securely.

[Front]

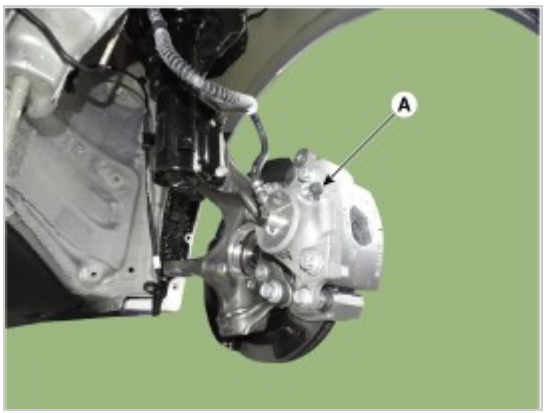

[Rear]

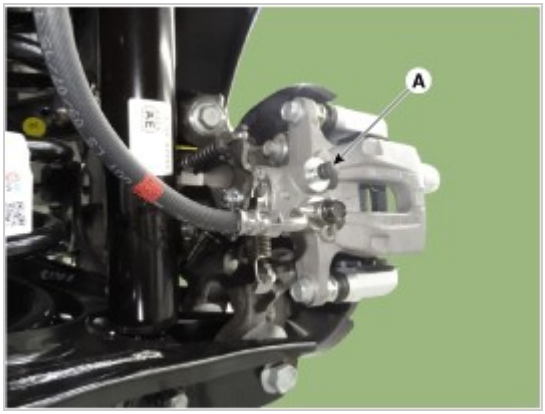

4. Repeat the procedure for wheel in the sequence shown below until air bubbles no longer appear in the fluid.

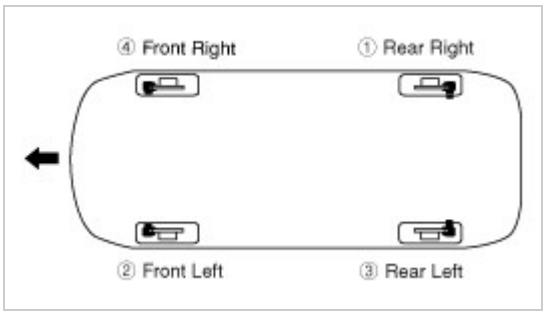

5. Refill the master cylinder reservoir to MAX (upper) level line.

Brake System

Components

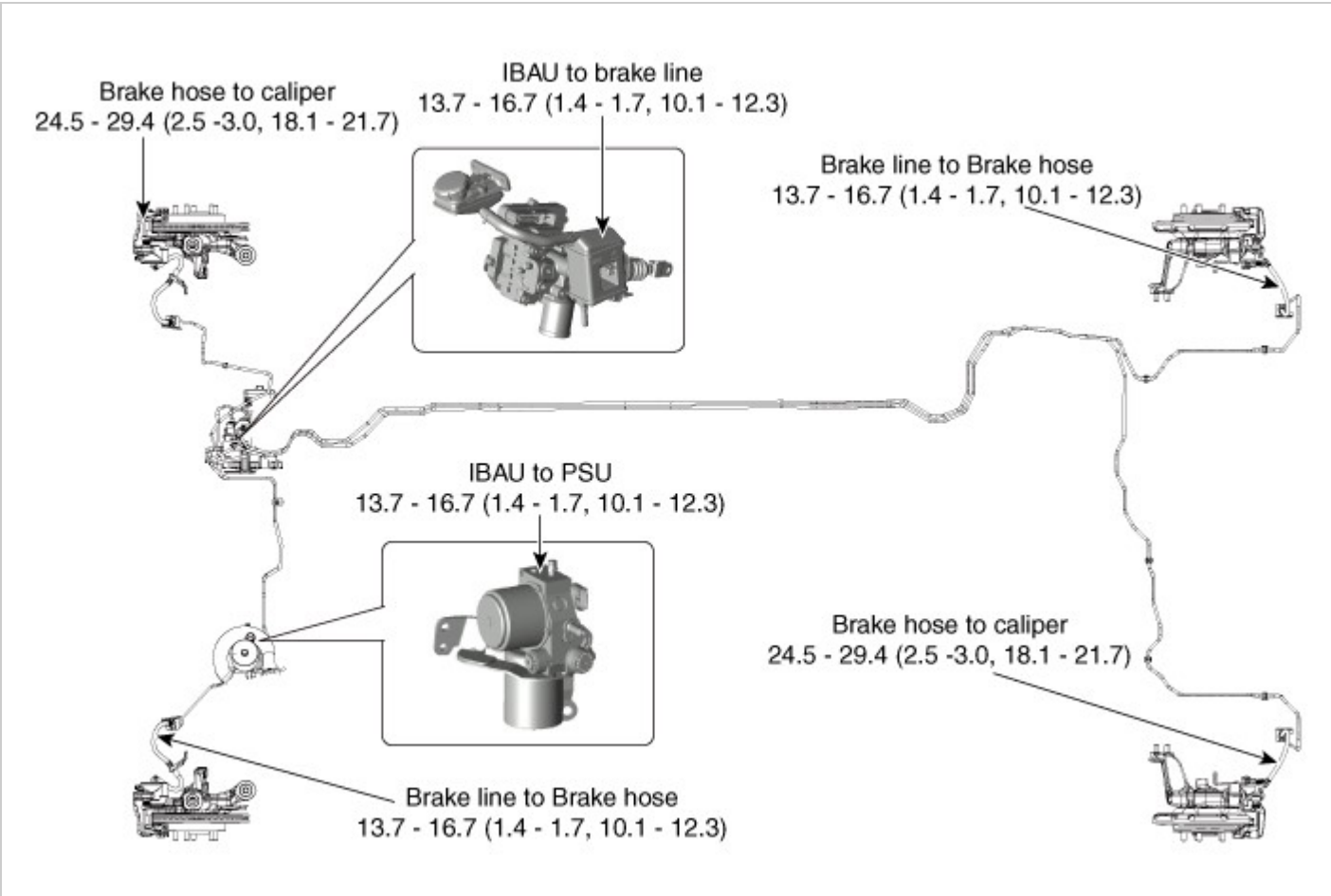

Brake System

Removal

1. Disconnect the brake fluid level switch connector, and remove the reservoir cap.
2. Remove the brake fluid from the master cylinder reservoir with a syringe.

NOTICE

- Do not spill brake fluid on the vehicle, it may damage the paint; if brake fluid does contact the paint, wash it off immediately with water.

3. Remove the wheel & tire.
4. Remove the brake hose clip (A).
5. Disconnect the brake tube by loosening the tube flare nut (B).

Tightening torque :
13.7 - 16.7 N.m (1.4 - 1.7 kgf.m, 10.1 - 12.3 lb-ft)

[Front]

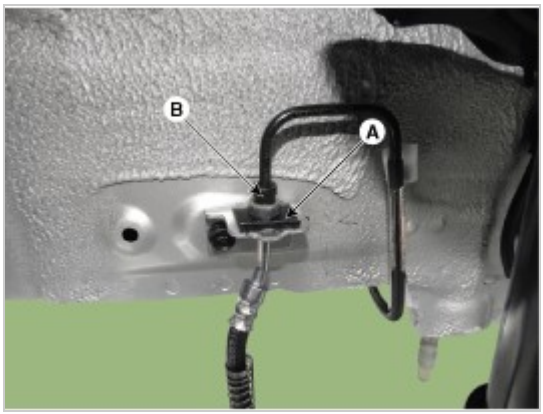

[Rear]

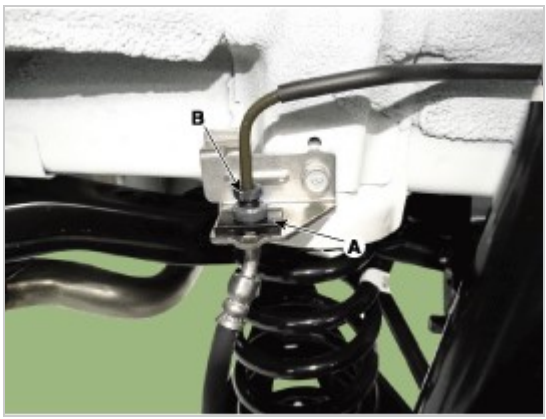

6. Disconnect the brake hose from the brake caliper by loosening the bolt (A).

Tightening torque :
24.5 - 29.4 N.m (2.5 - 3.0 kgf.m, 18.1 - 21.7 lb-ft)

[Front]

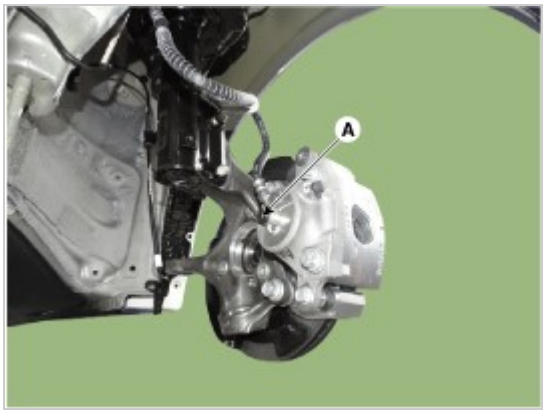

[Rear]

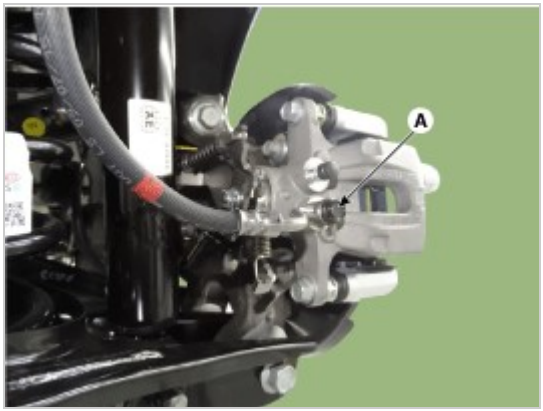

Installation

1. To install, reverse the removal procedure.

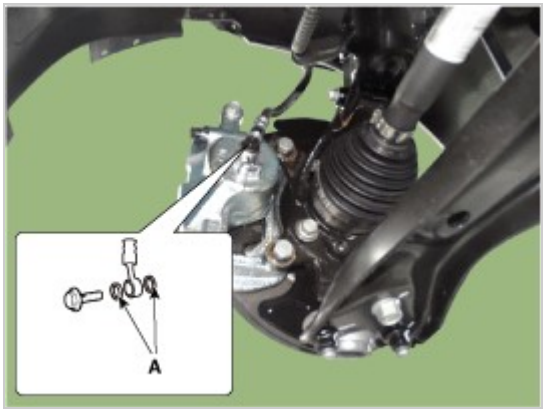

2. After installing, bleed the brake system.
   (Refer to Brake System - "Brake System Bleeding")
3. Check the spilled brake oil.

Brake System

Components

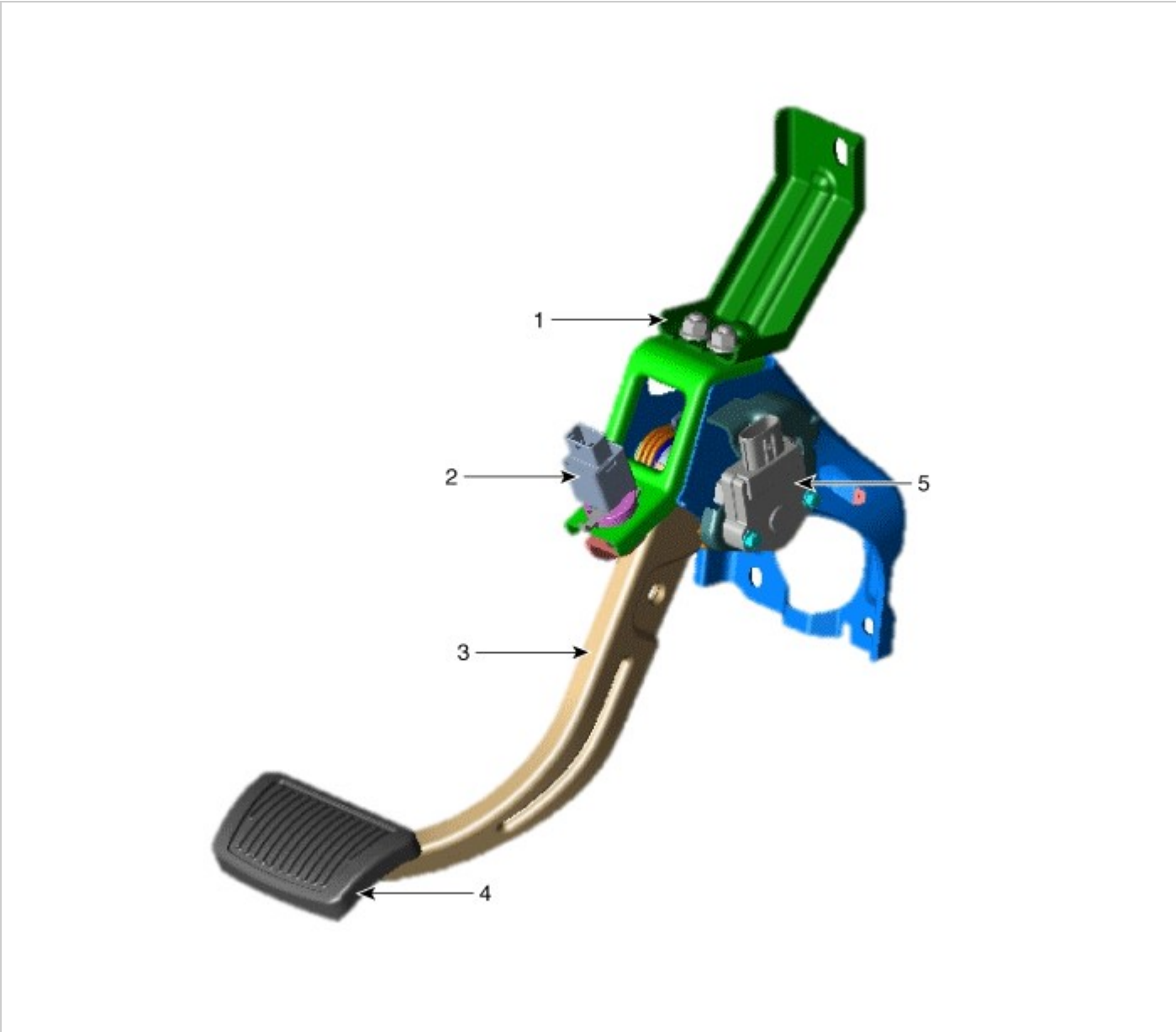

1. Brake pedal member assembly
2. Stop lamp switch
3. Brake pedal arm
4. Brake pedal pad
5. Brake pedal stroke sensor

Removal

1. Turn ignition switch OFF and disconnect the negative (-) battery cable.
2. Remove the crash pad lower panel.
   (Refer to Body - "Crash Pad")
3. Remove the knee air bag.
   (Refer to Restraint - "Knee Airbag (KAB) Module")
4. Disconnect the stop lamp switch connector (A) and the brake pedal stroke sensor connector (B).

5. Remove the brake pedal member mounting nut (A).

Tightening torque :
16.7 - 25.5 N.m (1.7 - 2.6 kgf.m, 12.3 - 18.8 lb-ft)

6. Remove the snap pin (A) and clevis pin (B).

7. Remove the mounting nuts (A) and then remove the brake pedal.

Tightening torque :
16.7 - 25.5 N.m (1.7 - 2.6 kgf.m, 12.3 - 18.8 lb-ft)

Installation

1. Install in the reverse of removal.
2. Check the brake pedal operation.
3. Conduct calibration after removing the brake pedal assembly.

Adjustment

Brake Pedal Sensor Calibration

The brake pedal sensor calculates the pedal full stroke according to the preset zero. Therefore, zeroing adjustment is necessary when first installed.Calibration must be performed as following cases.

- After changing the brake pedal assembly (you cannot change only the sensor).
- After changing the IBAU (Intergrated Brake Actuation Unit).
- When error codes C1380 (calibration) or C1379 (signal error) are detected.
- After bleeding IBAU & PSU line.

Brake Pedal Travel Sensor (PTS) Calibration Procedure

The calibration must be done while the vehicle is parked without stepping on the brake pedal and while there is no vibration on the vehicle.

1. Connect the GDS. (CAN line or OBD connector)
2. Turn ignition switch ON.
3. Select calibration of the brake pedal sensor.
4. Follow prompts displayed on the GDS screen to complete brake pedal sensor calibration.

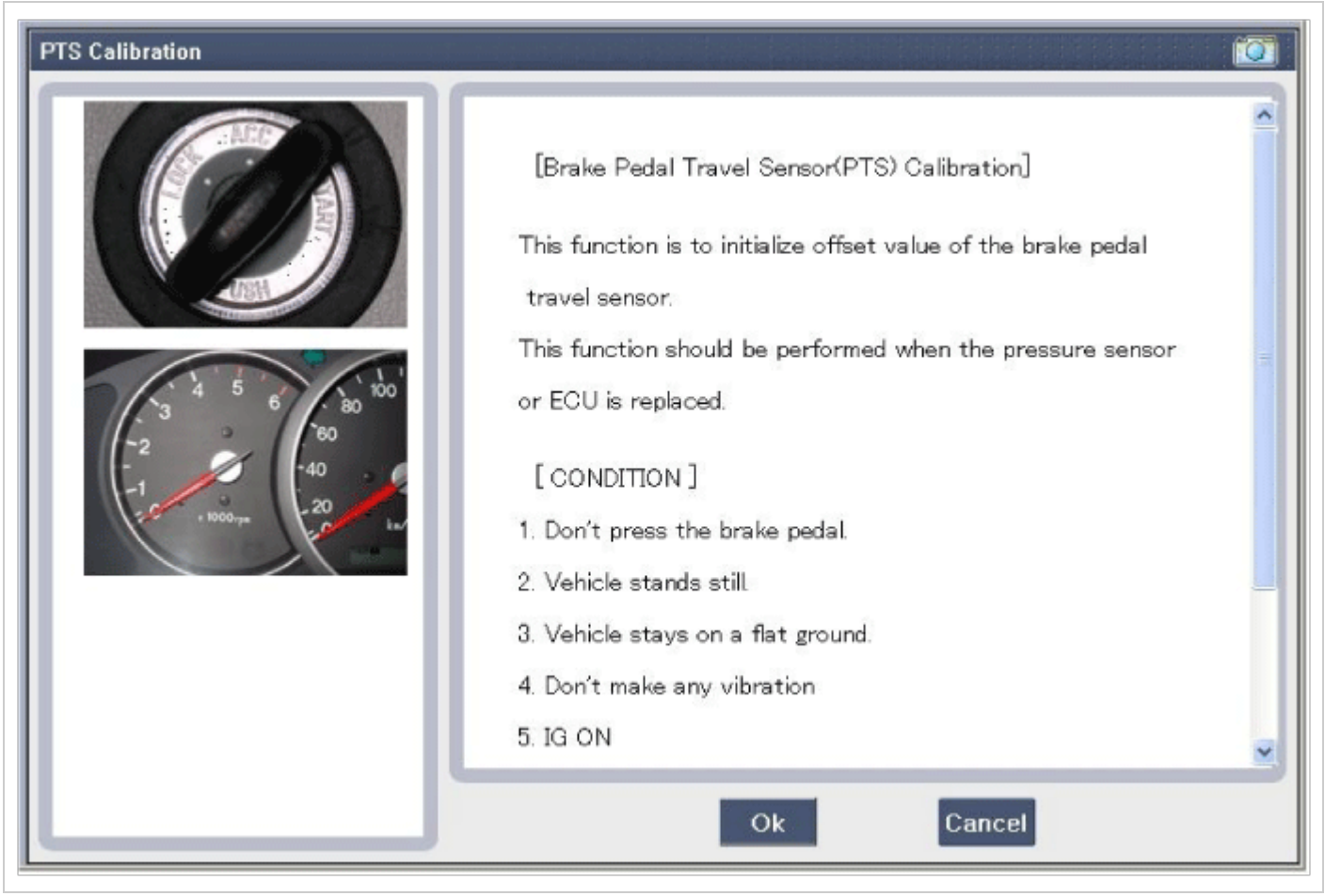

5. Turn ignition switch off after calibration procedure.
6. Confirm success or failure of calibration.

Components

1. Bleed screw
2. Caliper body
3. Pad inner shim
4. Brake pad
5. Pad return spring
6. Caliper carrier
7. Pad retainer

Brake System

Removal

1. Loosen the wheel nuts slightly.
   Raise the vehicle, and make sure it is securely supported.
2. Remove the front wheel and tire (A) from the front hub.

Tightening torque :
107.9 - 127.5 N.m (11.0 - 13.0 kgf.m, 79.6 - 94.0 lb-ft)

3. Loosen the brake hose mounting bolt and then remove the brake hose bracket.

Tightening torque :
8.8 - 13.7 N.m (0.9 - 1.4 kgf.m, 6.5 - 10.1 lb-ft)

4. Put down the caliper body after loosening the guide rod bolt.

Tightening torque :
21.6 - 31.4 N.m (2.2 - 3.2 kgf.m, 15.9 - 23.1 lb-ft)

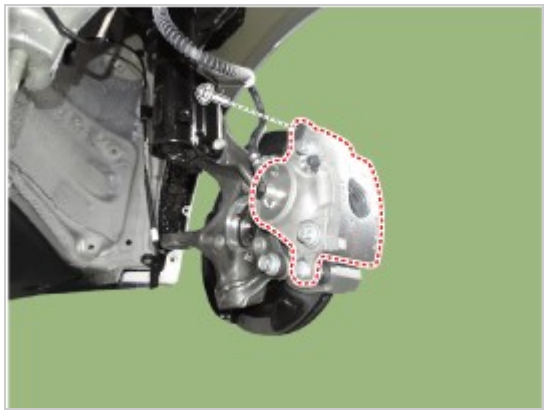

5. Remove the pad return spring (A).

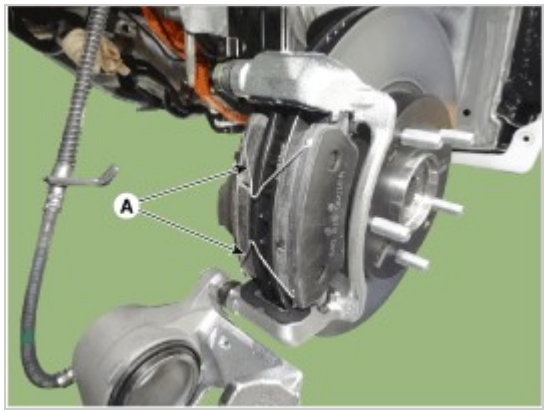

NOTICE

- Pad return springs must be replaced with new ones whenever pads are replaced.
- Technicians should be careful not to deform pad return springs.
- When pad return springs are deformed, it may cause improper braking, more fuel consumption.

6. Remove the brake pad.

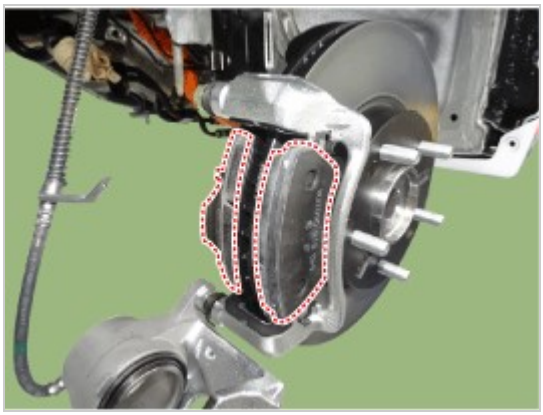

7. Separate the pad retainer. And remove the caliper carrier by loosening the caliper mounting bolts.

Tightening torque :
98.1 - 117.7 N.m (10.0 - 12.0 kgf.m, 72.3 - 86.8 lb-ft)

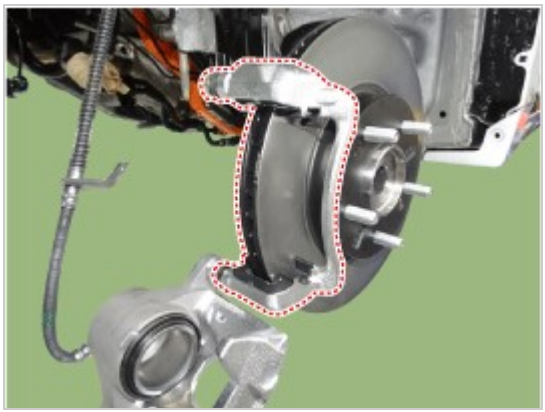

NOTICE

- When Replacing the brake pad, replace pad return spring (A), pad retainers (B), inner pad shim (C) and brake pads (D).

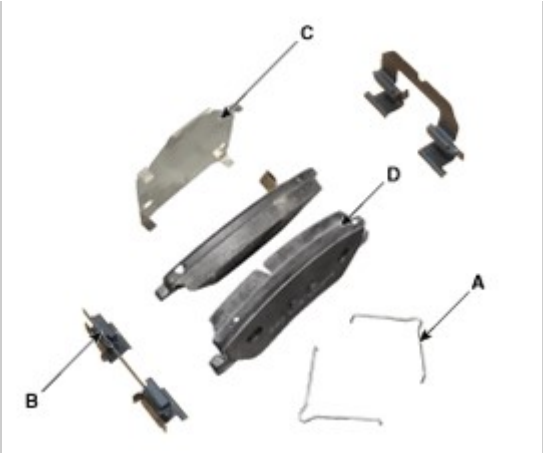

8. Remove the front brake disc by loosening the screws.

Tightening torque :
4.9 - 5.8 N.m (0.5 - 0.6 kgf.m, 3.6 - 4.3 lb-ft)

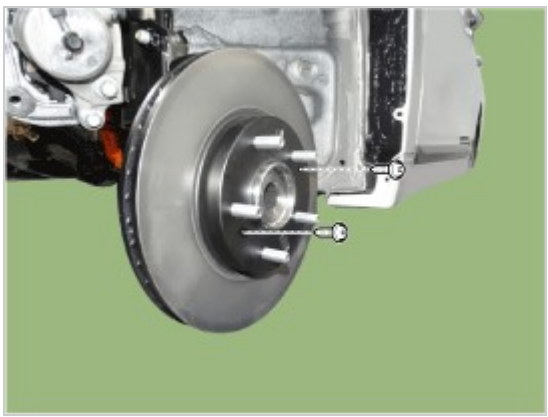

Replacement

Brake Pad

1. Loosen the wheel nuts slightly.
   Raise the vehicle, and make sure it is securely supported.
2. Remove the front wheel and tire (A) from the front hub.

   Tightening torque :
   107.9 - 127.5 N.m (11.0 - 13.0 kgf.m, 79.6 - 94.0 lb-ft)

3. Loosen the brake hose mounting bolt and then remove the brake hose bracket.

   Tightening torque :
   8.8 - 13.7 N.m (0.9 - 1.4 kgf.m, 6.5 - 10.1 lb-ft)

4. Put down the caliper body after loosening the guide rod bolt.

   Tightening torque :
   21.6 - 31.4 N.m (2.2 - 3.2 kgf.m, 15.9 - 23.1 lb-ft)

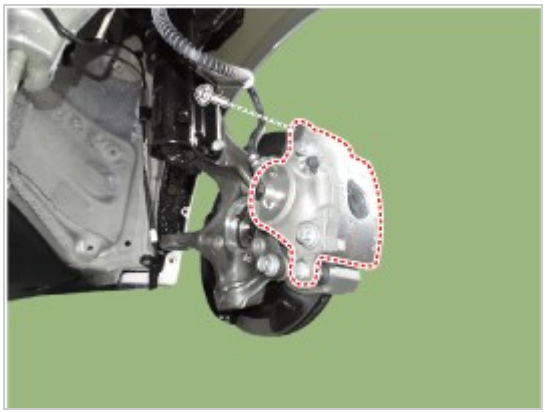

5. Remove the pad return spring (A).

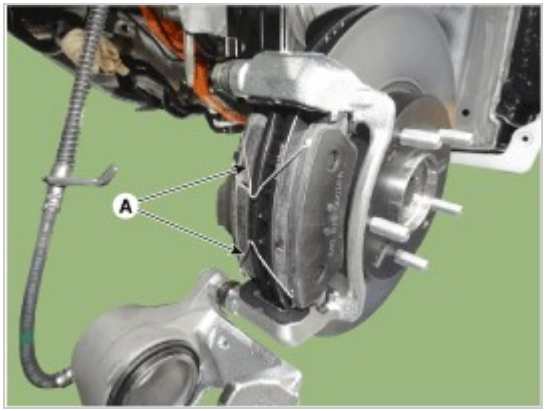

6. Remove the brake pad.

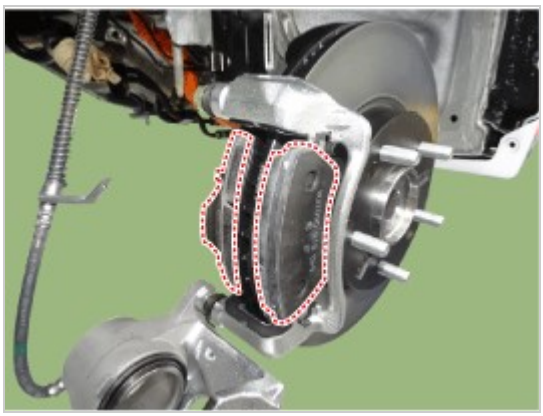

NOTICE

- When Replacing the brake pad, replace pad return spring (A), pad retainers (B), inner pad shim (C) and brake pads (D).

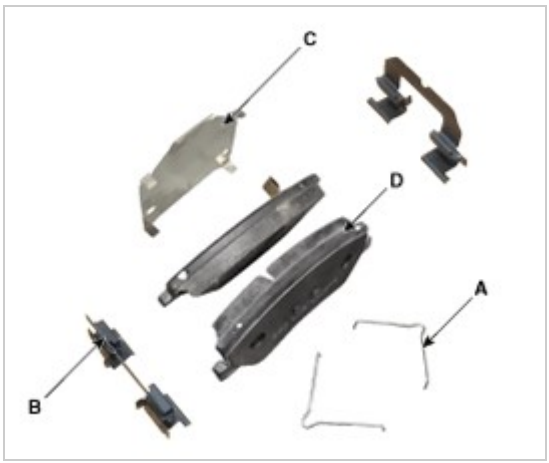

7. Install the pad return spring (A).

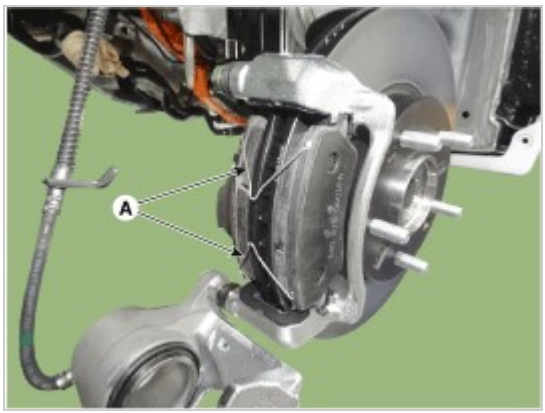

NOTICE

- Pad return springs must be replaced with new ones whenever pads are replaced.
- Technicians should be careful not to deform pad return springs.
- When pad return springs are deformed, it may cause improper braking, more fuel consumption.

8. Use a SST (09581-2T100) when installing the brake caliper assembly.

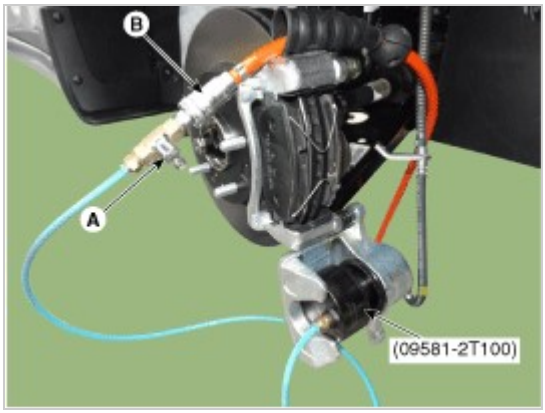

NOTICE

- Connect an air hose(B) to the SST after confirming that the valve of the SST is surely closed.
- Input the SST in the caliper and press the caliper piston while opening the valve of the SST slowly couter clock wise.
- Close the valve (A) of the SST and disconnect the air hose (B); then, open the valve again to get the rest of air out and remove the SST from the caliper.

9. Install the caliper body (A) then tighten the guide rod bolt (B).

Tightening torque:
21.6 - 31.4 N.m (2.2 - 3.2 kgf.m, 15.9 - 23.1 lb-ft)

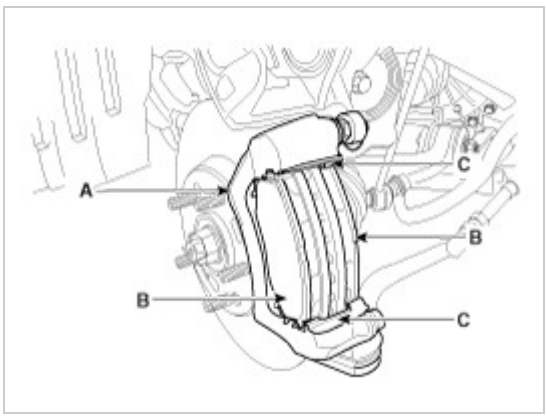

Inspection

Front Brake Disc Thickness Check

1. Check the brake pads for wear and fade.
2. Check the brake disc for damage and cracks.
3. Remove all rust and contamination from the surface, and measure the disc thickness at 8 points, at least, of same distance (5mm) from the brake disc outer circle.

Front brake disc thickness
- Standard : 22 mm (0.87 in)
- Service Limit : 20 mm (0.79 in)
Deviation : Less than 0.005 mm (0.0002 in)

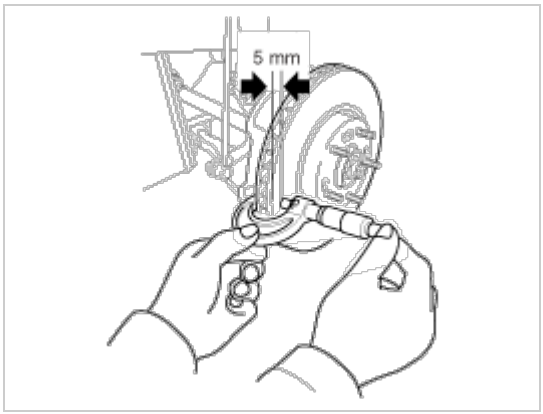

4. If wear exceeds the limit, replace the discs and pad assembly left and right of the vehicle.

Front Brake Pad Check

1. Check the pad wear. Measure the pad thickness and replace it, if it is less than the specified value.

   Pad thickness
   Standard value : 17 mm (0.67 in)
   Service limit : 8.0 mm (0.31in)

2. Check that grease is applied, to sliding contact points. Check for metal damage to the pad and backing.

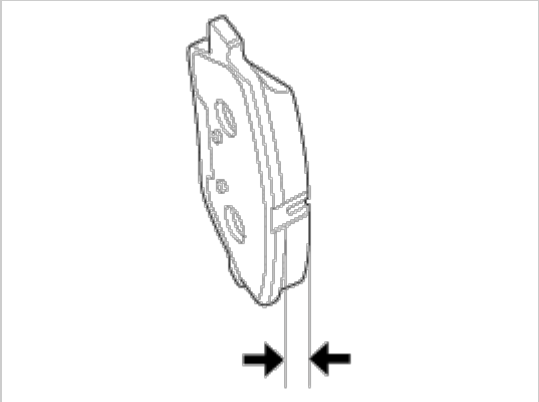

Front brake disc runout check

1. Place a dial gauge about 5mm (0.2 in.) from the outer circumference of the brake disc, and measure the runout of the disc.

   Brake disc runout
   Limit : 0.04 mm (0.0016 in.) or less (new one)

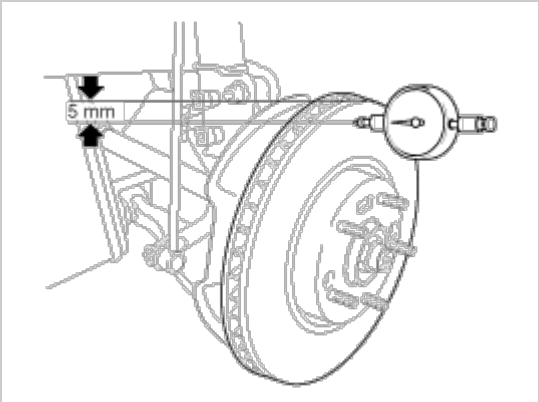

2. If the runout of the brake disc exceeds the limit specification, replace the disc, and then measure the runout again.
3. If the runout does not meet the limit specification, remove the disc, turn it 180° and reinstall. Then check the runout of the brake disc again.
4. If the runout cannot be corrected by changing the position of the brake disc, replace the brake disc.

Installation

1. To install, reverse the removal procedure.
2. Use a SST (09581-2T100) when installing the brake caliper assembly.

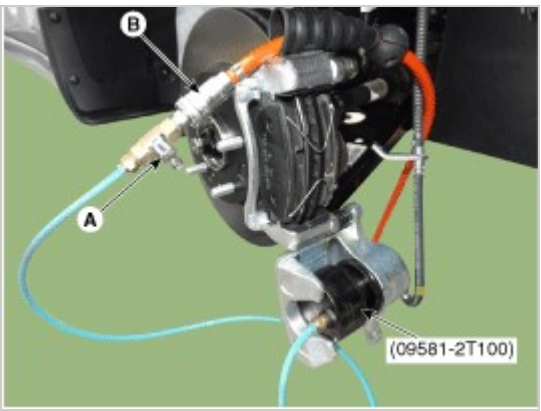

NOTICE

- Connect an air hose (B) to the SST after confirming that the valve of the SST is surely closed.
- Input the SST in the caliper and press the caliper piston while opening the valve of the SST slowly couter clock wise.
- Close the valve (A) of the SST and disconnect the air hose (B); then, open the valve again to get the rest of air out and remove the SST from the caliper.

3. After installing, bleed the brake system.
   (Refer to Brake System - "ESP System Bleeding")

Brake System

Components

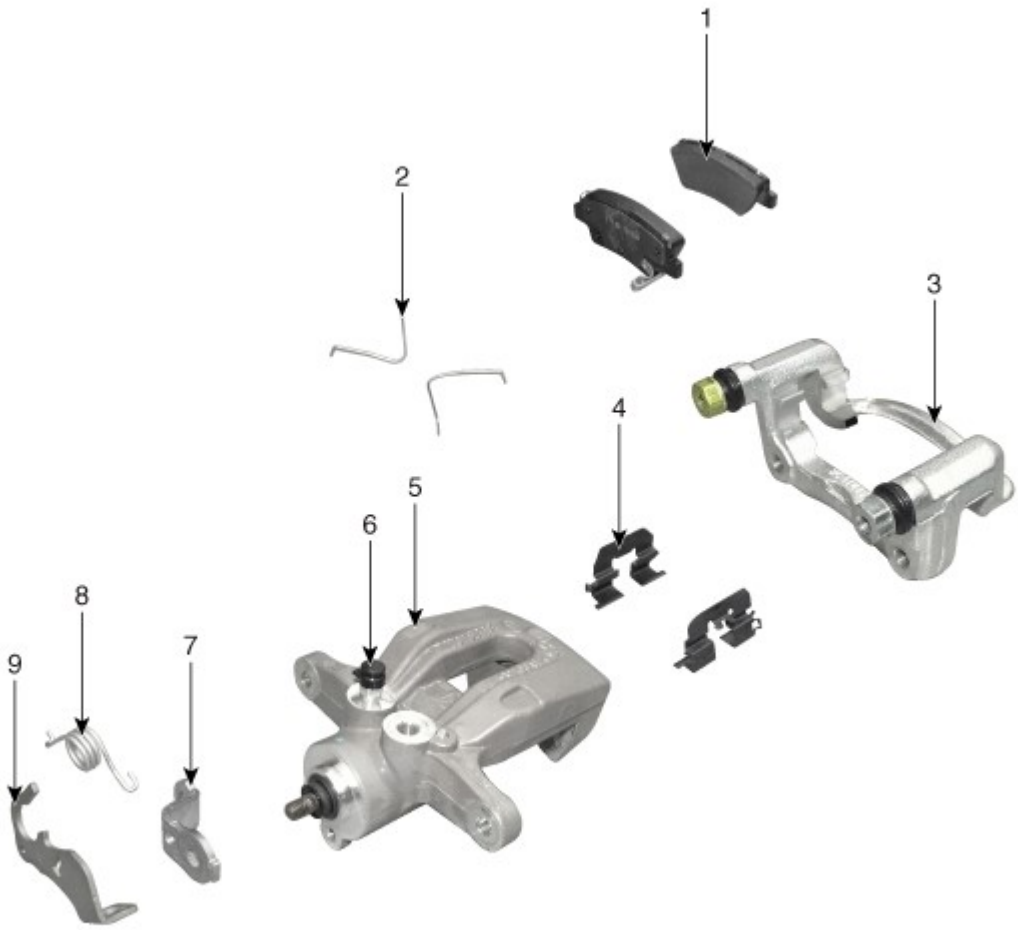

1. Brake pad
2. Pad return spring
3. Caliper carrier
4. Pad retainer
5. Caliper body
6. Bleed screw
7. Stopper
8. Return spring
9. Operating lever

Brake System

Removal

1. Loosen the wheel nuts slightly.
   Raise the vehicle, and make sure it is securely supported.
2. Remove the rear wheel and tire (A) from the rear hub.

   Tightening torque :
   107.9 - 127.5 N.m (11.0 - 13.0 kgf.m, 79.6 - 94.0 lb-ft)

NOTICE

- Be careful not to damage the hub bolts when removing the rear wheel and tire (A).

3. Remove the parking brake cable fixed clip (A).

4. Pull the operating lever as a direction of arrow in the illustration below and then remove the parking brake cable.

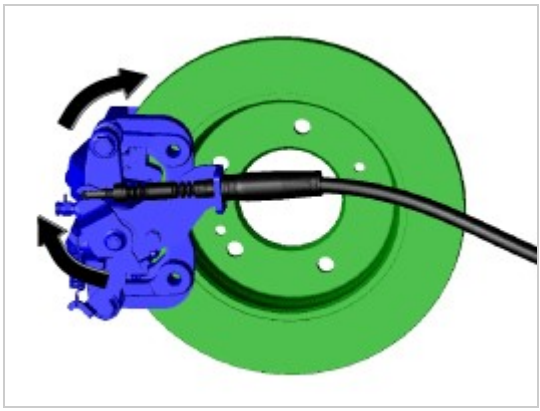

5. Loosen the guide rod bolt and then pivot the caliper body up out of the way.

Tightening torque :
21.6 - 31.4 N.m (2.2 - 3.2 kgf.m, 15.9 - 23.1 lb-ft)

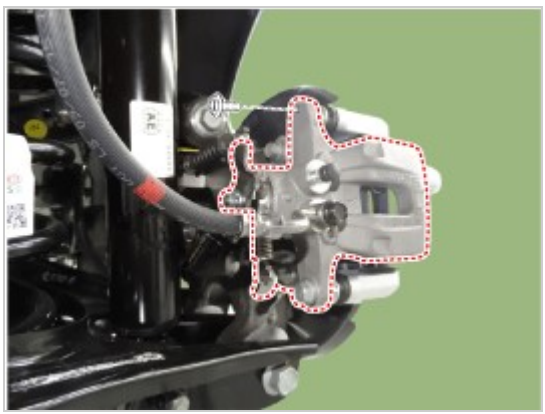

6. Remove the pad return spring (A).

NOTICE

- Pad return springs must be replaced with new ones whenever pads are replaced.
- Technicians should be careful not to deform pad return springs.
- When pad return springs are deformed, it may cause improper braking, more fuel consumption.

7. Separate the brake pad and pad retainer.

8. Loosen the caliper mounting bolts and then removethe rear caliper assembly (A).

Tightening torque :
63.7 - 73.5 N.m (6.5 - 7.5 kgf.m, 47.0 - 54.2 lb-ft)

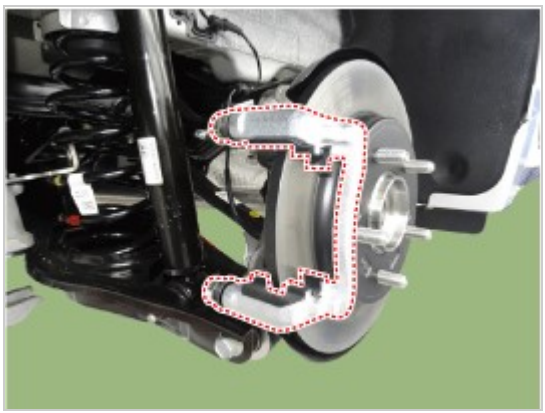

9. Remove the rear brake disc by loosening the screws.

Tightening torque :
4.9 - 5.9 N.m (0.5 - 0.6 kgf.m, 3.6 - 4.3 lb-ft)

Replacement

Brake Pad

1. Loosen the wheel nuts slightly.
   Raise the vehicle, and make sure it is securely supported.
2. Remove the rear wheel and tire (A) from the rear hub.

NOTICE

- Be careful not to damage the hub bolts when removing the rear wheel and tire (A).

3. Remove the parking brake cable fixed clip (A).

4. Pull the operating lever as a direction of arrow in the illustration below and then remove the parking brake cable.

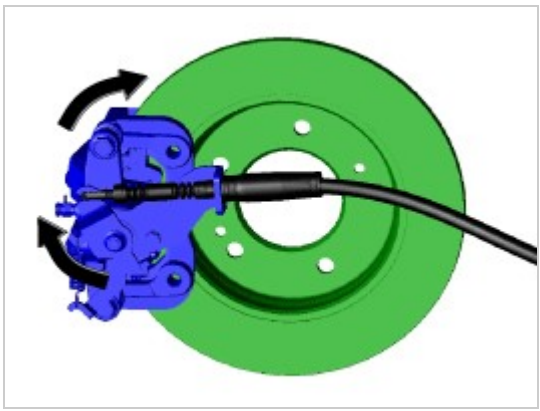

5. Loosen the guide rod bolt and then pivot the caliper body up out of the way.

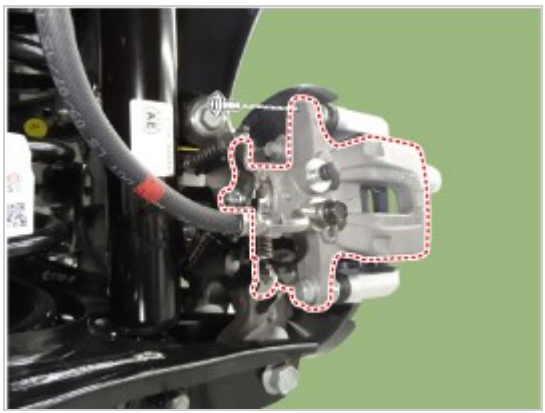

6. Remove the pad return spring (A).

7. Replace the brake pad and pad retainer.

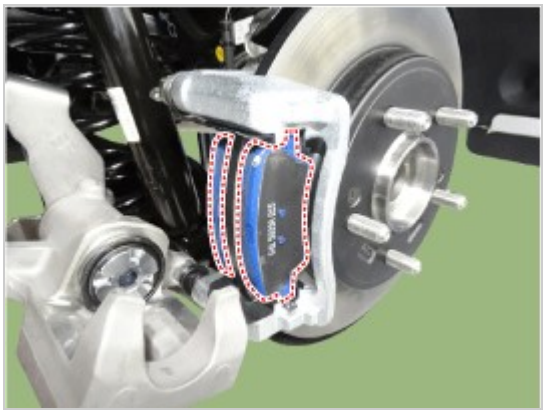

8. Install the pad return spring (A).

NOTICE

- Pad return springs must be replaced with new ones whenever pads are replaced.
- Technicians should be careful not to deform pad return springs.
- When pad return springs are deformed, it may cause improper braking, more fuel consumption.

9. Use a SST (09580-0U000) when installing the brake caliper assembly.

10. Install the caliper body (A) then tighten the guide rod bolt (B).

Tightening torque :
21.6 - 31.4 N.m (2.2 - 3.2 kgf.m, 15.9 - 23.1 lb-ft)

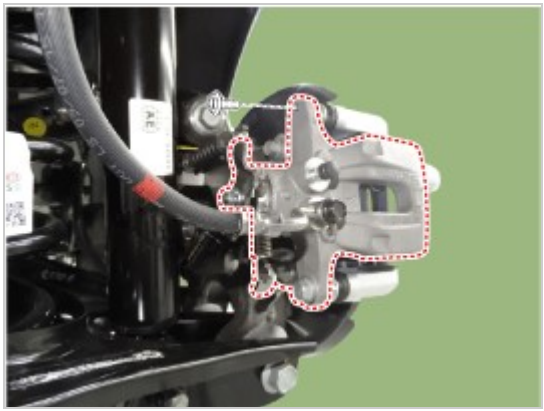

11. Pull the operating lever as a direction of arrow in the illustration below and then install the parking brake cable.

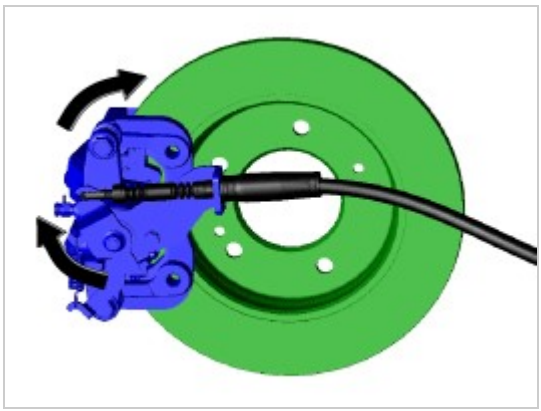

12. Install the parking brake cable fixed clip (A).

13. Install the rear wheel and tire (A) from the rear hub.

Tightening torque :
107.9 - 127.5 N.m (11.0 - 13.0 kgf.m, 79.6 - 94.0 lb-ft)

NOTICE

- Be careful not to damage the hub bolts when Installing the rear wheel and tire (A).

Inspection

Rear Brake Disc Thickness Check

1. Check the brake pads for wear and fade.

2. Check the brake disc for damage and cracks.
3. Remove all rust and contamination from the surface, and measure the disc thickness at 8 points, at least, of same distance (5mm) from the brake disc outer circle.

Brake disc thickness
Standard : 10 mm (0.394 in)
Service limit : 8.4 mm (0.331 in)
Deviation : less than 0.005 mm (0.0002 in)

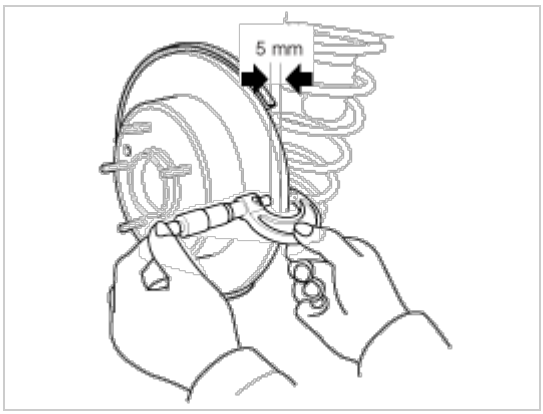

4. If wear exceeds the limit, replace the discs and pad assembly left and right of the vehicle.

Rear Brake Pad Check

1. Check the pad wear. Measure the pad thickness and replace it, if it is less than the specified value.

Pad thickness
Standard value : 15 mm (0.60 in)
Service limit : 7.0 mm (0.28 in)

2. Check the damage of pad, backing metal and contamination with grease.

Rear Brake Disc Runout Check

1. Place a dial gauge about 5mm (0.2 in.) from the outer circumference of the brake disc, and measure the runout of the disc.

Brake disc runout
Limit : 0.04 mm (0.0016 in.) or less (new one)

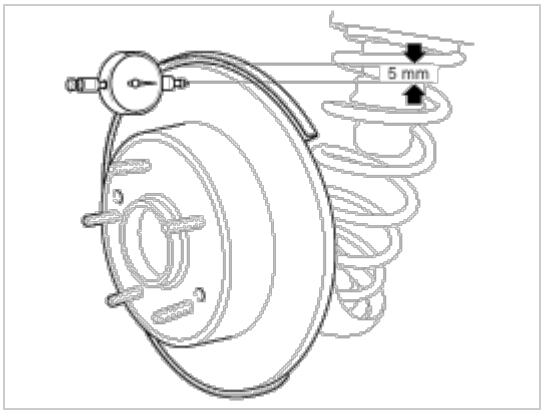

2. If the runout of the brake disc exceeds the limit specification, replace the disc, and then measure the runout again.
3. If the runout exceeds the limit specification, install the brake disc after turning it 180° and then check the runout of the brake disc again.
4. If the runout cannot be corrected by changing the position of the brake disc, replace the brake disc.

Installation

1. To install, reverse the removal procedure.
2. Use a SST (09580-0U000) when installing the brake caliper assembly.

NOTICE

- Wind the piston into the caliper body until it is fully retracted.
- Do not use any power assisted tools for this task.

3. After installing, bleed the brake system.
   (Refer to Brake System - "Brake System Bleeding")

Adjustment

Parking Brake

NOTICE

- Re-setting of the parking brake is necessary after overhauling the caliper body, or if the brake calipers, housing, parking brake cable or brake discs have been changed.

1. Remove the floor console to reach the adjusting nut.
2. Loosen the parking brake cable until both operating levers rest in fully off position.
3. Bring the brake pads in their operating position by pressing the brake pedal down several times until there is resistance.
4. Tension the parking brake cable by tightening the adjusting nut, until the operating levers on both calipers lift from the stop, up to a distance of (A) and (D) between operating lever (B) and stopper (C).

Distance (A + D) : Max. 3 mm (0.12 in)

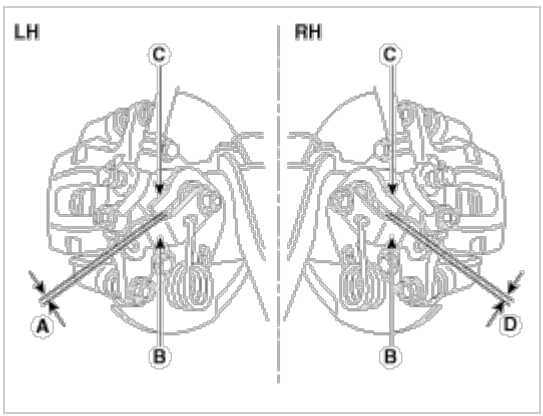

5. Refit the floor console.
6. Parking brake lever in the car must be in fully loosened position.
7. If the handbrake cables where changed, actuate the parking brake a few times with maximum force to stretch the parking brake cables, and then control adjusting as above.
8. Check the wheels of their free operation.
9. Test drive.

Brake System

Components Location

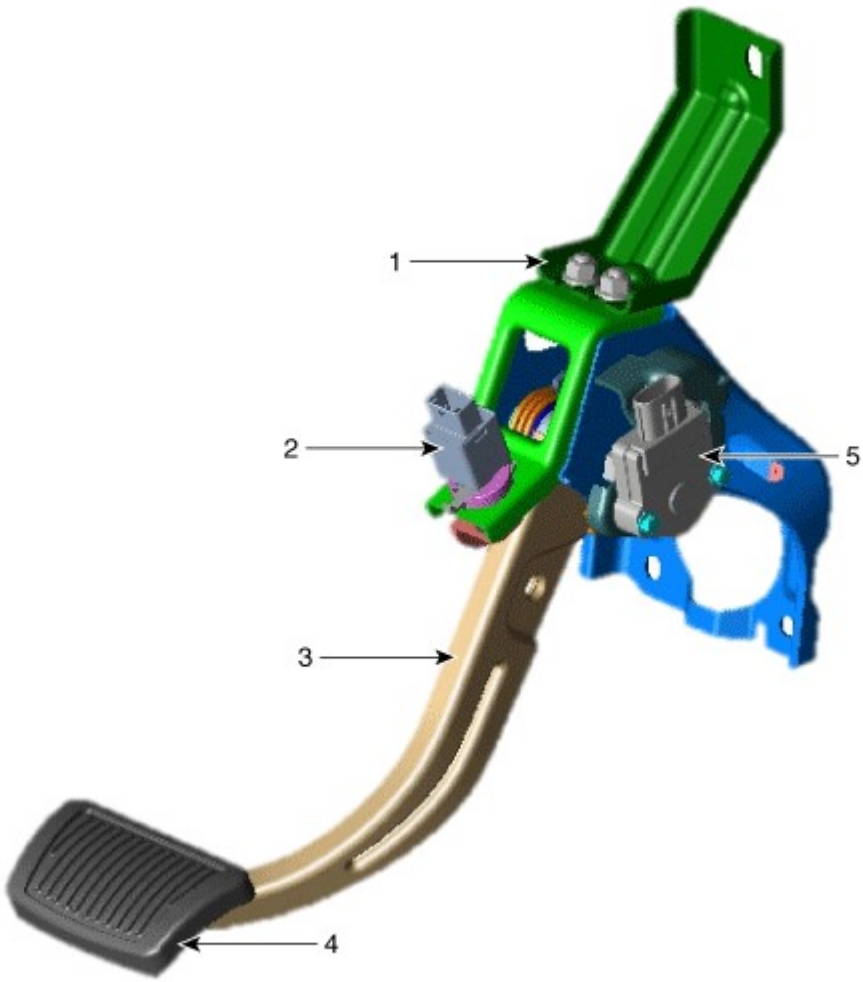

1. Brake pedal member assembly
2. Stop lamp switch
3. Brake pedal arm assembly
4. Brake pedal pad
5. Pedal stroke sensor

Schematic Diagram

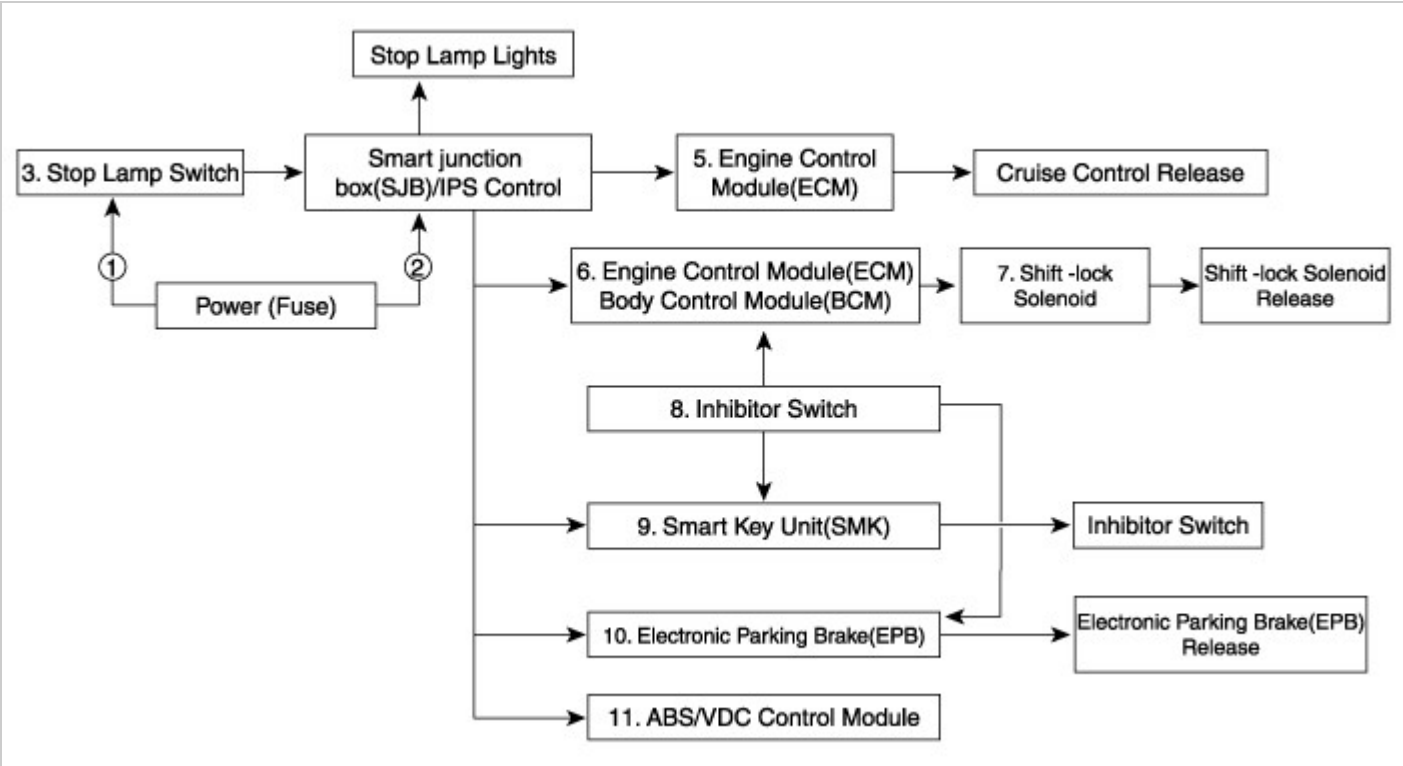

System Circuit Diagram

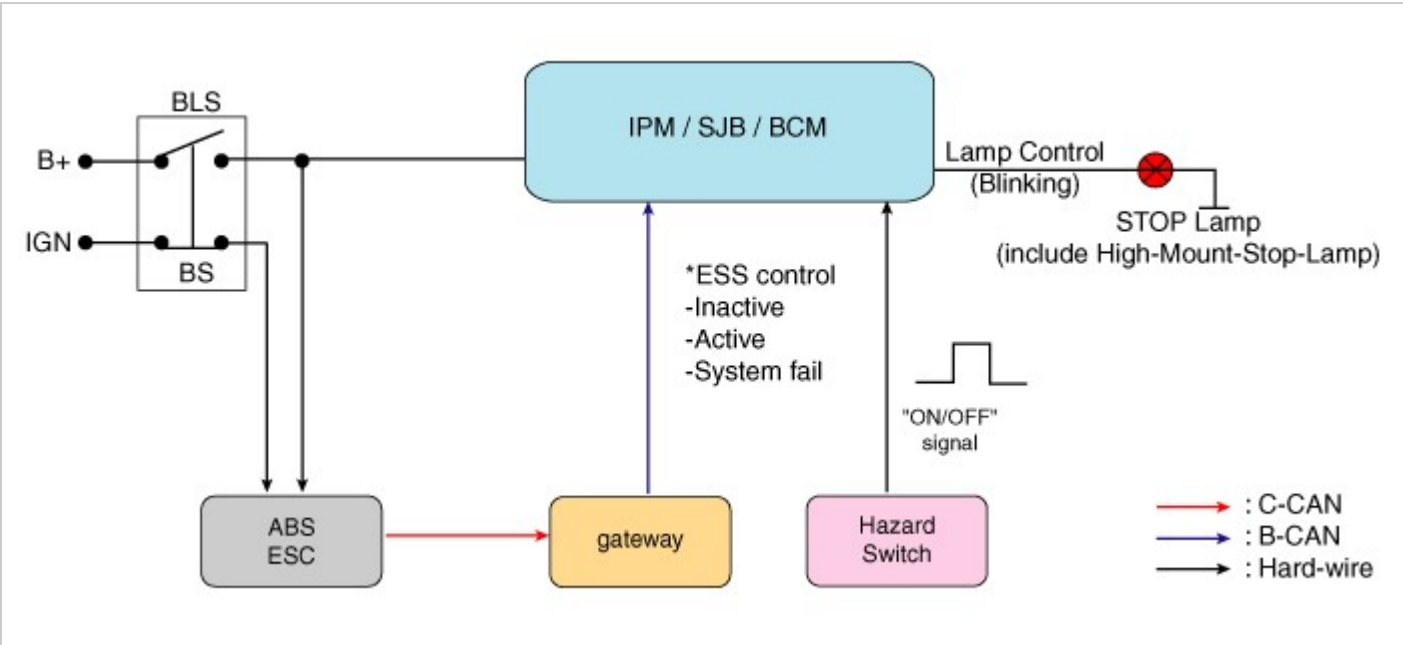

Terminal Function

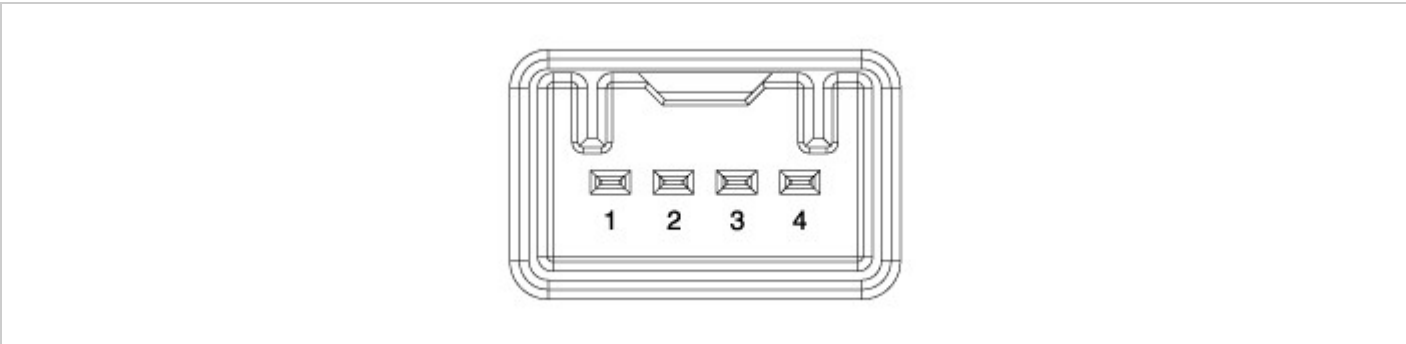

Teminal	Description
1	IGN1
2	Engine Control Module (ECM)
3	B+
4	Stop Lmap

Troubleshooting

1. Part diagnosis

Items	Cause	Symptom	
Switch fuse	Faulty fuse connection, Damaged fuse	– DTC Code : P0504 – Symptom : Shifting gear trouble, Starting failure, Cruise control function cancelation trouble, EPB function cancelation trouble, Stop lamp lighting trouble, ESP OFF light illuminated.	① A waveform inspection is performed using an oscilloscope on each part during vehicle acceleration/braking. (Refer to stop lamp switch circuit inspection procedures) ② Refer to the relevant repair procedures of the part when something abnormal is discovered in the waveform (Refer to the repair procedures of the relevant part and if necessary replace it)
Relay fuse	Faulty fuse connection, Damaged fuse	– DTC Code : P0504 – Symptom : Shifting gear trouble, Starting failure, Cruise control function cancelation trouble, EPB function cancelation trouble, Stop lamp lighting trouble , ESP OFF light illuminated.	
Stop lamp switch	• Damaged wiring of each part • Faulty connection to connector • Each part is defective	– DTC Code : P0504 – Symptom : Shifting gear trouble, Starting failure, Cruise control function cancelation trouble, EPB function cancelation trouble, Stop lamp lighting trouble , ESP OFF light illuminated.	
Stop signal electronic module (If it applies)		– DTC Code : P0504, C2130, C2131 – Symptom : Shifting gear trouble, Starting failure, Cruise control function cancelation trouble, EPB function cancelation trouble, Stop lamp lighting trouble , ESP OFF light illuminated.	
Engine control module (ECM)		– DTC Code : P0504 – Symptom :Shifting gear trouble,Cruise control function cancelation trouble	
Body control module (BCM)		– Shifting gear trouble	
Shift-lock solenoid		– Shifting gear trouble	
Inhibitor switch		– Symptom : Shifting gear trouble, Starting failure, Cruise control function cancelation trouble, EPB function cancelation trouble	
Smart Key Unit (SMK)		– Starting failure	
Electronic parking brake		– Symptom : EPB function cancelation trouble , ESP OFF light illuminated.	
ABS/VDC control module (Pressure sensor)		– Symptom : ESP OFF light illuminated.	

2. Symptom diagnosis

Symptom	Part that could be the cause	
Trouble starting	Switch fuse, Relay fuse, Stop lamp switch, Stop signal electronic module, ABS/VDC control module, Each wire, Connector	① Inspect waveform using an oscilloscope on each part during vehicle acceleration/braking. (Refer to stop lamp switch circuit inspection Procedures) ② Refer to the relevant repair procedures of the part when something abnormal is discovered in the waveform (Refer to the repair procedures of the relevant part and if necessary replace it)
Trouble shifting gears	Switch fuse, Relay fuse, Stop lamp switch, Stop signal electronic module, BCM, ECM, Inhibitor switch, Each wire, Connector	
ESP OFF light illuminated	Switch fuse, Relay fuse, Stop lamp switch, Stop signal electronic module, ABS/VDC control module, Each wire, Connector	
P0504	Switch fuse, Relay fuse, Stop lamp switch, Stop signal electronic module, ECM, Each wire, Connector	
Stop lamp does notworking	Switch fuse, Relay fuse, Stop lamp switch, Stop signal electronic module, Wire/Connector disconnected	
Stop lamp always turns on	Stop lamp switch, Stop signal electronic module, Wiring short circuit, Damaged fuse	

3. Stop lamp switch system diagnosis

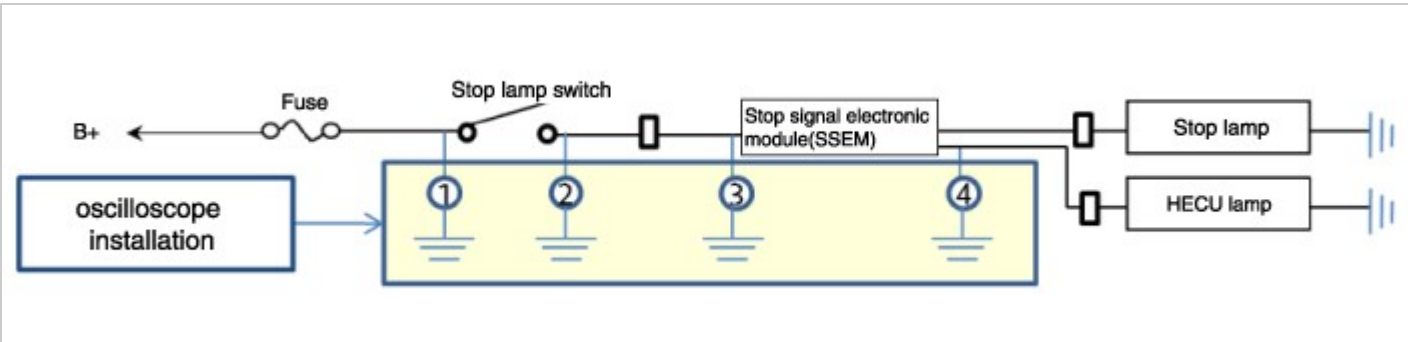

● : Always ON ○ : ON - OFF operation X : Always OFF

Symptom (When the ESP OFF lamp illuminated)	System				Remedy
	① Power Supply(B+)	② End of the Stop Lamp Switch	③ SSEM Input	④ SSEM Output	
Switch internal open	●	X	X	X	Replace a new one and check it
Switch internal short	●	●	●	●	Check the stop lamp switch after removing it ① Switch failure : Replace a new one ② Wiring failure : Check part that could be the cause
SSEM internal short	●	○	○	● or X	Check the SSEM after removing it ① SSEM failure : Replace a new one ② Wiring failure : Check the part that could be the cause
SSEM Internal open	●	○	○	X	Check the SSEM after removing it
Power supply open	X	X	X	X	Check the power supply connector or the fuse
Power supply short (Current reduction)	●	○	○	● or X	If the power supply line is shorted, SSEM ON-OFF may not be operating well due to the amount of current reduction Check the fuse damage
Failure between SSEM and output	●	○	X	X	Check the connector and the wiring
Failure between SSEM and Stop lamp (Not operating the stop lamp No siganls on GDS)	●	○	○	○	Check the connector and the wiring

SSEM : Stop Signal Electronic Module

4. Refer to DTC guide when the related DTC codes are displayed.

Brake System

Removal

1. Turn ignition switch OFF and disconnect the negative (-) battery cable.
2. Remove the lower crash pad.
   (Refer to Body - "Crash Pad")
3. Remove the knee airbag.
   (Refer to Rstraint - "Air Bag Module")
4. Disconnect the stop lamp switch connector (A).

5. Pull the locking plate (A) as indicated by the arrow.

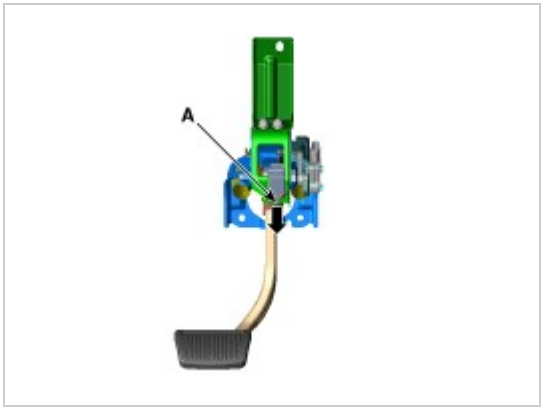

6. Turn stop lamp switch 45° counterclockwise and remove it.

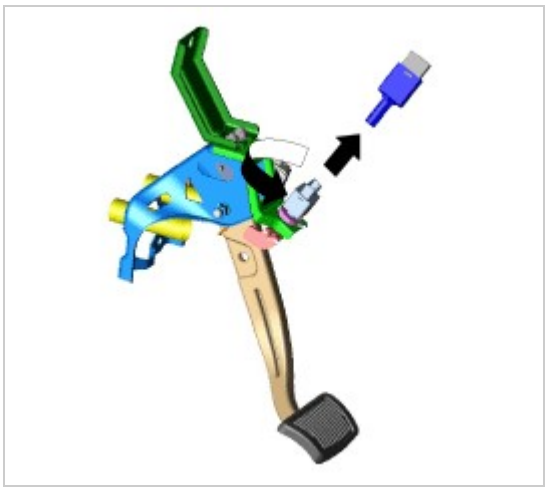

7. Inspect a removed stop lamp switch along the below procedures.
   (1) Confirm a normal connection with terminal part
      – A confirmation can be made to see if the connector has been secured properly and if a connection mark is present.

Installation

1. Fix the brake pedal arm and insert fully the stop lamp switch as hiding contact part. Turn stop lamp switch 45° clockwise and install it.

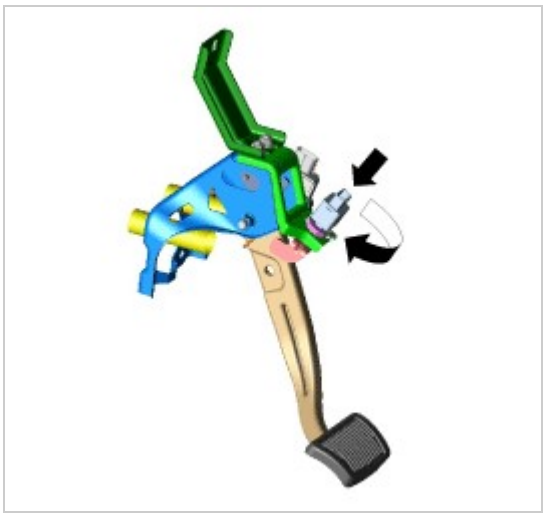

2. Assemble locking plate (A) by pushing.

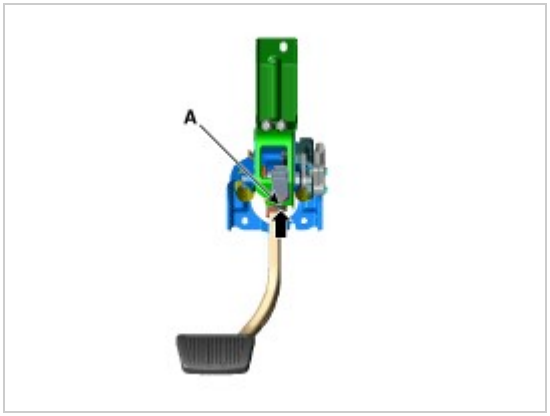

3. Confirm the gap between stop lamp switch and bracket.

Stop lamp clearance :1.0 - 2.0 mm (0.04 - 0.08 in.)

- If the gap between stop lamp switch and bracket is not 1.0-2.0mm (0.04-0.08in), perform the above process again.

4. Connect the stop lamp switch connector.

5. Remove the knee airbag.
   (Refer to Rstraint - "Air Bag Module")
6. Install the lower crash pad.
   (Refer to Body - "Crash Pad")
7. Connect the negative (-) battery cable.

Adjustment

1. Turn ignition switch OFF and disconnect the negative (-) battery cable.
2. Remove the lower crash pad.
   (Refer to Body - "Crash Pad")
3. Remove the knee airbag.
   (Refer to Rstraint - "Air Bag Module")
4. Confirm the gap between stop lamp switch and bracket.

Stop lamp clearance :1.0 - 2.0 mm (0.04 - 0.08 in.)

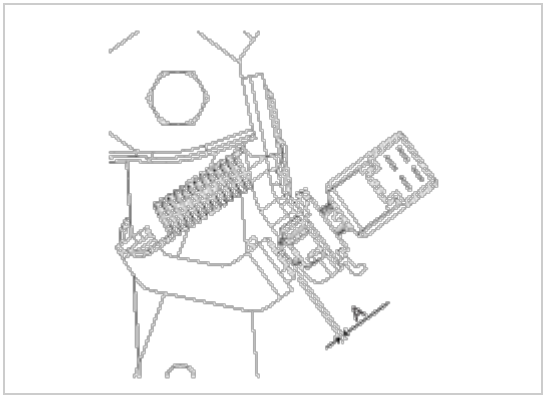

5. If the gap between stop lamp switch and bracket is not 1.0-2.0mm (0.04-0.08in), check the mounting clip and other part of around stop lamp.
6. If there is normal, remove the stop lamp switch and then install again.

Inspection

1. Fuse inspection

Mount the test fuse to the switch fuse and relay fuse part to confirm a normal joint fit.

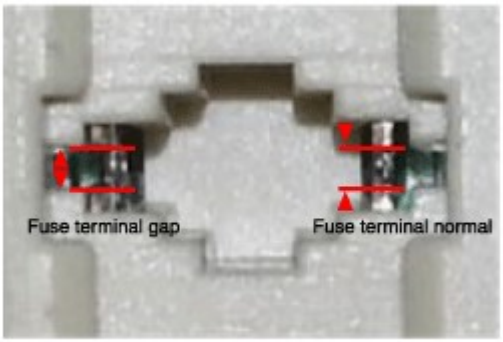

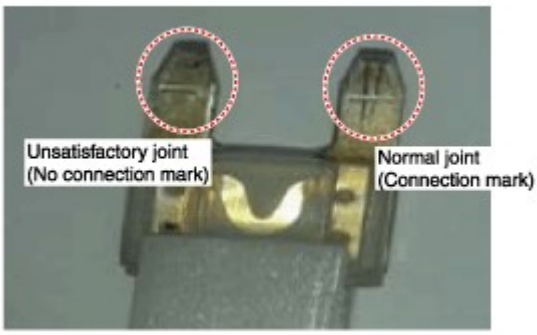

2. GDS Data Analysis

1. Analyze GDS data and confirm if there is anything wrong with the stop lamp switch.
   (1) Connect the GDS to the self-diagnosis connector.
   (2) Turn the spark switch on
   (3) Step on the brake pedal.
   (4) Inspect the "brake switch" category that displays the "sensor data" GDS.)

   Normal waveform : The pressure sensor signal value will change according to the brake ON/OFF switch.

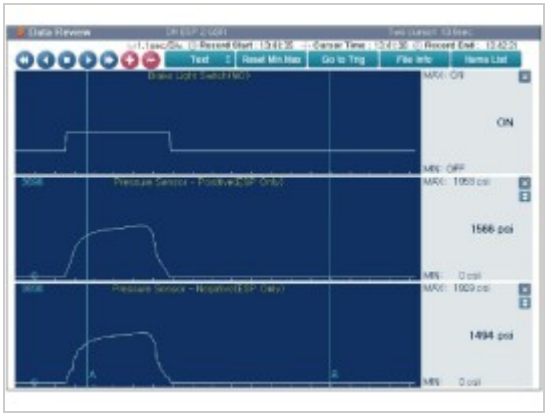

3. Inspection of connector by each part

Check to see whether or not each connector has been damaged, or terminal surge, or incomplete connection has taken place

[Engine room junction box]

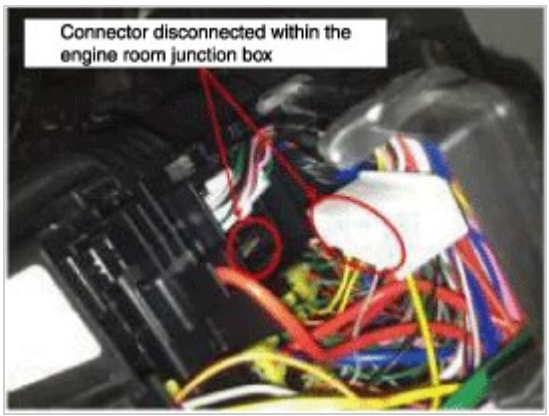

[ABS/VDC control module]

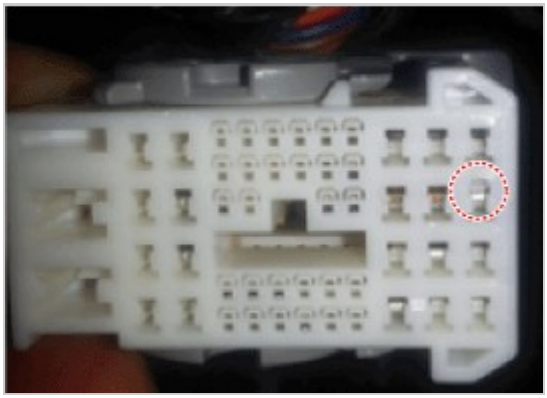

4. Inspect the stop lamp circuit

Connect probe to each terminal wire and confirm oscilloscope waveform.

[Stop lamp switch input/output]

[Oscilloscope waveform screen]

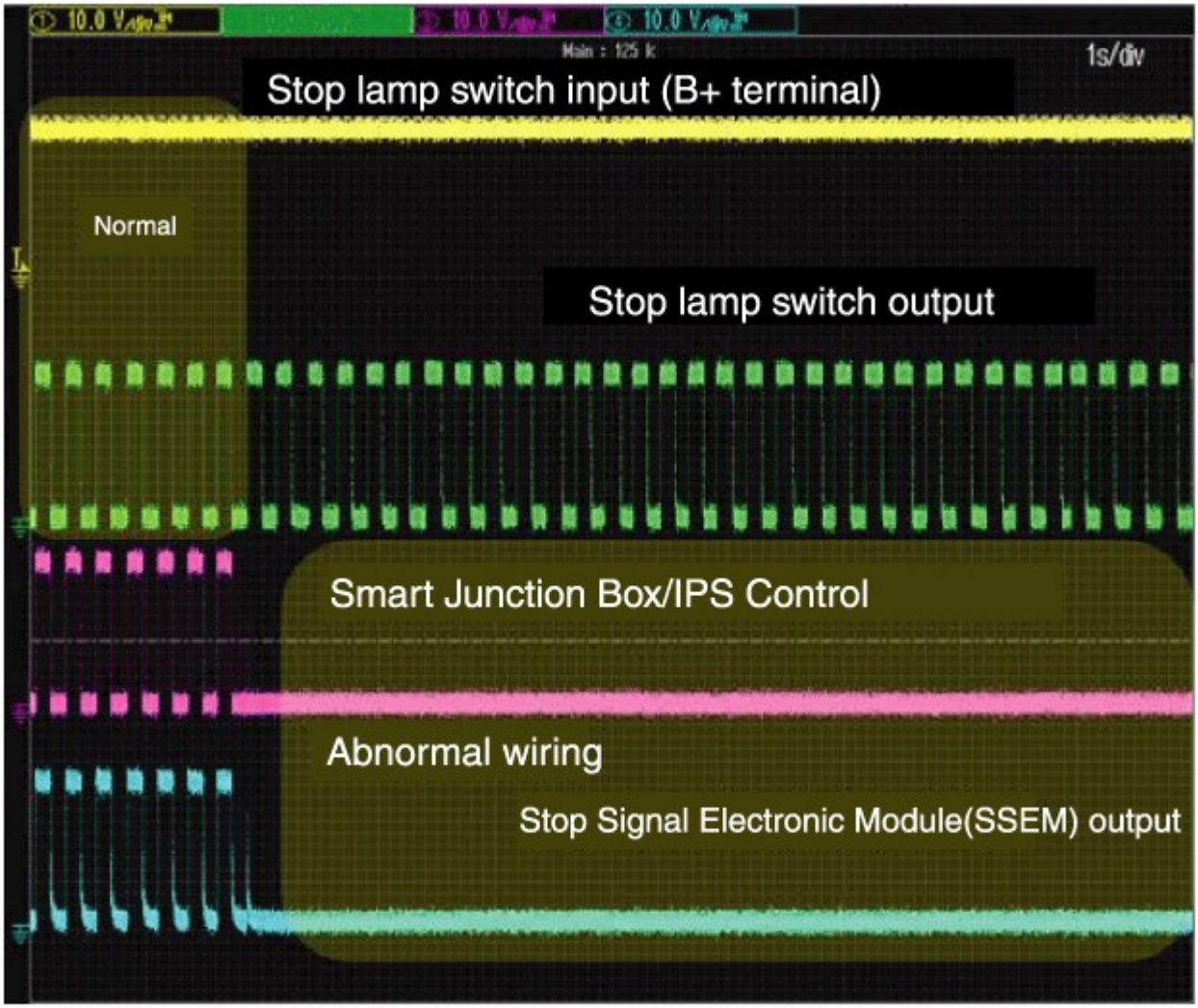
10.0 V
10.0 V
10.0 V
Main : 125 k
1s/div
Stop lamp switch input (B+ terminal)
Normal
Stop lamp switch output
Smart Junction Box/IPS Control
Abnormal wiring
Stop Signal Electronic Module(SSEM) output

Components

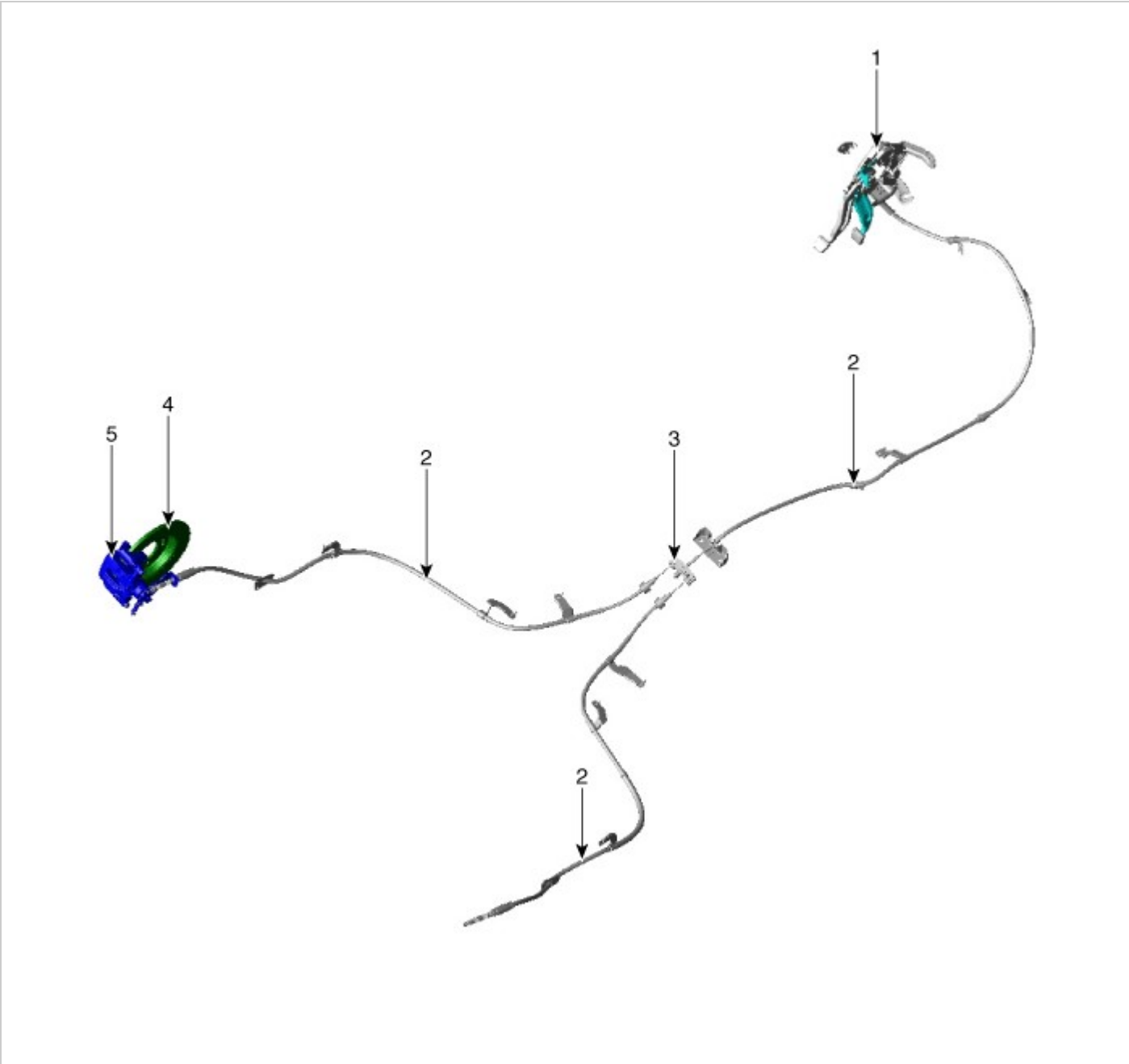

1. Parking brake pedal
2. Parking brake cable
3. Equalizer assembly
4. Brake disc
5. Brake caliper

Removal

Parking Brake Pedal

1. Disconnect the negative (-) battery cable.
2. Remove the crash pad lower panel.
   (Refer to Body - "Crash Pad")
3. Remove the junction box.
   (Refer to Body Electrical System - "Fuses and Relays")
4. Disconnect the parking brake switch connector (A).

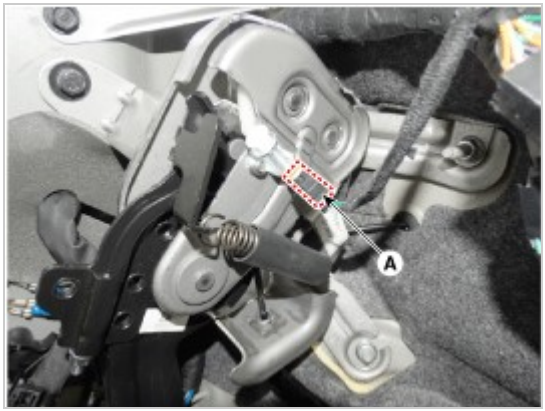

5. Remove the parking brake cable adjusting nut (A) and the fixing clip (B), and then remove the parking cable from the brake pedal.

Tightening torque :
19.6 - 29.4 N.m (2.0 - 3.0 kgf.m, 14.5 - 21.7 lb-ft)

6. Remove the parking brake pedal mounting bolts and nut.

Tightening torque
Bolt : 8.8 - 13.7 N.m (0.9 - 1.4 kgf.m, 6.5 - 10.1 lb-ft)
Nut : 9.8 - 14.7 N.m (1.0 - 1.5 kgf.m, 7.2 - 10.8 lb-ft)

7. Install in the reverse of removal.
8. Adjust the parking brake pedal stroke.
   (1) Operate the parking brake pedal through a full stroke over 3 times for setting the parking cables.
   (2) Adjust the adjusting nut for parking brake pedal stroke 6-7 notches when operating effort is 294N (30kgf,216lb).

NOTICE

1) The parking brake adjustment must be carried out after adjusting the rear shoe.
2) After adjusting parking brake, notice following matter.
a. Must be free from clearance between adjusting nut and pin.
b. Check securely that the brake is not dragging.

Brake System

Removal

1. Disconnect the negative (-) battery cable.
2. Remove the crash pad lower panel.
   (Refer toBody - "Crash Pad")

3. Remove the junction box.
   (Refer to Body Electrical System - "Fuses and Relays")
4. Disconnect the parking brake switch connector (A).

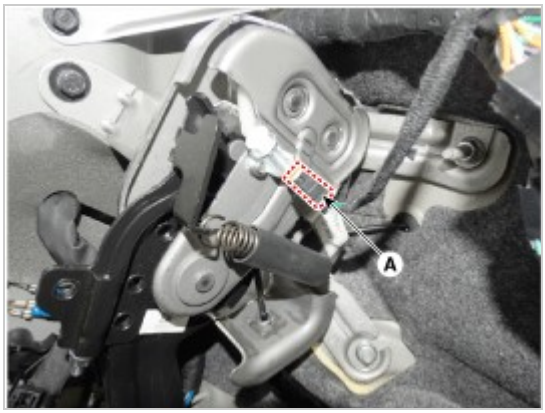

5. Loosen the screw and then remove the parking brake switch.

6. Install in the reverse of removal.

Brake System

Removal

1. Disconnect the negative (-) battery cable.
2. Release the parking brake.
3. Remove the crash pad lower panel.
   (Refer to Body - "Crash Pad")
4. Remove the parking brake cable adjusting nut (A) and the fixing clip (B), and then remove the parking cable from the brake pedal.
   Tightening torque :
   19.6 - 29.4 N.m (2.0 - 3.0 kgf.m, 14.5 - 21.7 lb-ft)

5. Loosen the parking brake cable bracket bolt (A).
   Tightening torque :
   3.9 - 5.9 N.m (0.4 - 0.6 kgf.m, 2.9 - 4.3 lb-ft)

6. Remove the floor console assembly.
   (Refer to Body - "Floor Console")
7. Loosen the parking brake cable bracket bolt.

   Tightening torque :
   3.9 - 5.9 N.m (0.4 - 0.6 kgf.m, 2.9 - 4.3 lb-ft)

8. Loosen the parking brake cable bracket bolt and then remove the parking cable from the Equalizer assembly (A).

   Tightening torque :
   19.6 - 29.4 N.m (2.0 - 3.0 kgf.m, 14.5 - 21.7 lb-ft)

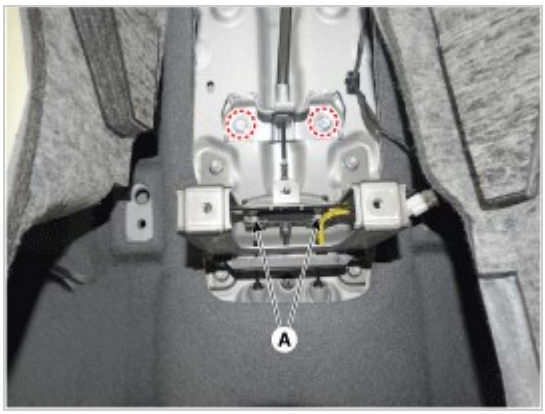

9. Loosen the wheel nuts slightly.
   Raise the vehicle, and make sure it is securely supported.
10. Remove the rear wheel and tire (A) from rear hub.

NOTICE

- Be careful not to damage the hub bolts when removing the rear wheel and tire (A).

11. Remove the parking brake cable fixed clip (A).

12. Pull the operating lever as a direction of arrow in the illustration below and then remove the parking brake cable.

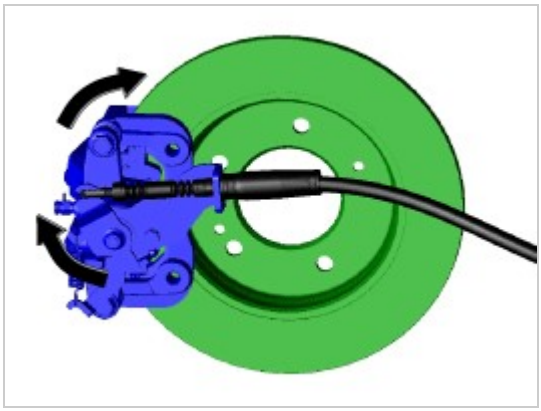

13. Remove the under cover.

14. Loosen the parking brake cable bracket bolts and them remove the parking cable.

Tightening torque :
8.8 - 13.7 N.m (0.9 - 1.4 kgf.m, 6.5 - 10.1 lb-ft)

15. To install, reverse the removal procedure.
16. Perform the rear disc brake adjustment.
    (Refer to Parking Brake Cable - "Adfustment")
17. Adjust the parking brake pedal stroke.
    (1) Operate the parking brake pedal through a full stroke over 3 times for setting the parking cables.

(2) Adjust the adjusting nut for parking brake pedal stroke 6-7notches when operating effort is 294N(30kgf,216lb).

NOTICE

1) The parking brake adjustment must be carried out after adjusting the rear shoe.
2) After adjusting parking brake, notice following matter.
a. Must be free from clearance between adjusting nut and pin.
b. Check securely that the brake is not dragging.

Adjustment

Rear Disc Brake Type

NOTICE

- Re-setting of the parking brake is necessary after overhauling the caliper body, or if the brake calipers, housing, parking brake cable or brake discs have been changed.

1. Remove the floor console to reach the adjusting nut.
2. Loosen the parking brake cable until both operating levers rest in fully off position.
3. Bring the brake pads in their operating position by pressing the brake pedal down several times until there is resistance.
4. Tension the parking brake cable by tightening the adjusting nut, until the operating levers on both calipers lift from the stop, up to a distance of (A) and (D) between operating lever (B) and stopper (C).

Distance (A + D) : Max. 3 mm (0.12 in)

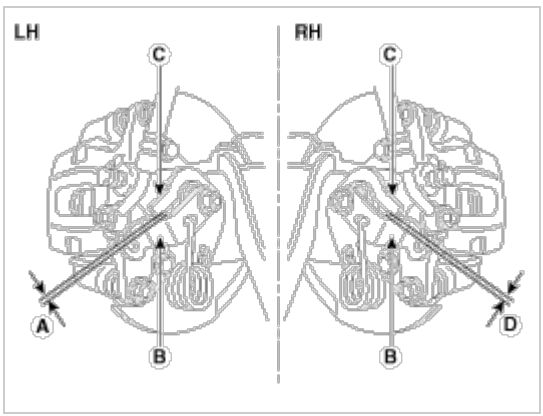

5. Refit the floor console.
6. Parking brake lever in the car must be in fully loosened position.
7. If the handbrake cables where changed, actuate the parking brake a few times with maximum force to stretch the parking brake cables, and then control adjusting as above.
8. Check the wheels of their free operation.
9. Test drive.

Rear Drum Brake Type

1. Depress the brake pedal several times to set the self-adjusting brake.

NOTICE

- For Drum Brake type, shoe clearance is automatically adjusted by the adjuster and adjusting lever.

Components

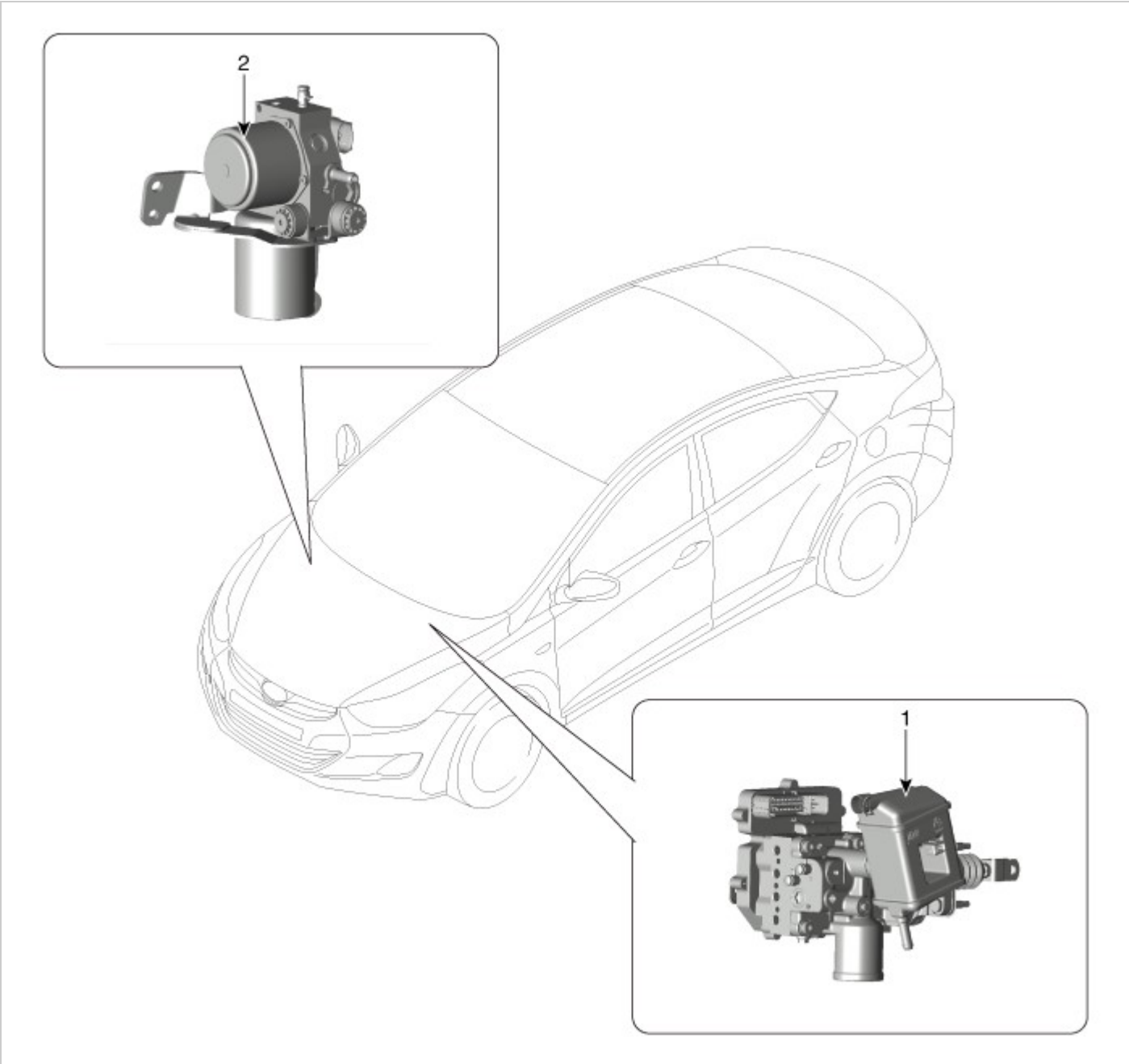

1. Intergrated Brake Actuation Unit
2. Pressure Source Unit

Description

Regeneration Brake System

During deceleration or braking of an electric vehicle or HEV, the drive motor acts as an alternator and charges the battery by converting the vehicle's kinetic energy generated during braking into electrical energy.

Regenerative braking amount depends on the vehicle speed, battery SOC, etc.

Achieves significant improvement in fuel efficiency in city driving with repeated acceleration and deceleration.

Regenerative Braking Cooperation Control (RBC)

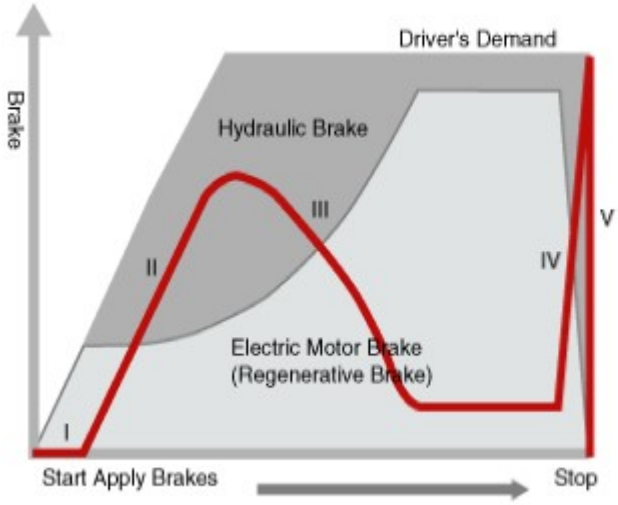

Driver's Demand = Friction Brake + Electric Brake

I	Electric Brake	Driver's Demand = Electric Brake
II	Blended Brake	Pressure Increase
III		Pressure Decrease
IV		Fast Pressure Increase
V	Friction Brake	Driver's Demand = Friction Brake

The brake force apportion is distributed by controlling hydraulic braking and the total brake force (hydraulic + regenerative brake) output that the driver requires is generated.In the case of regenerative brake failure, the total brake force that the driver requires is supplied by the hydraulic brake system.

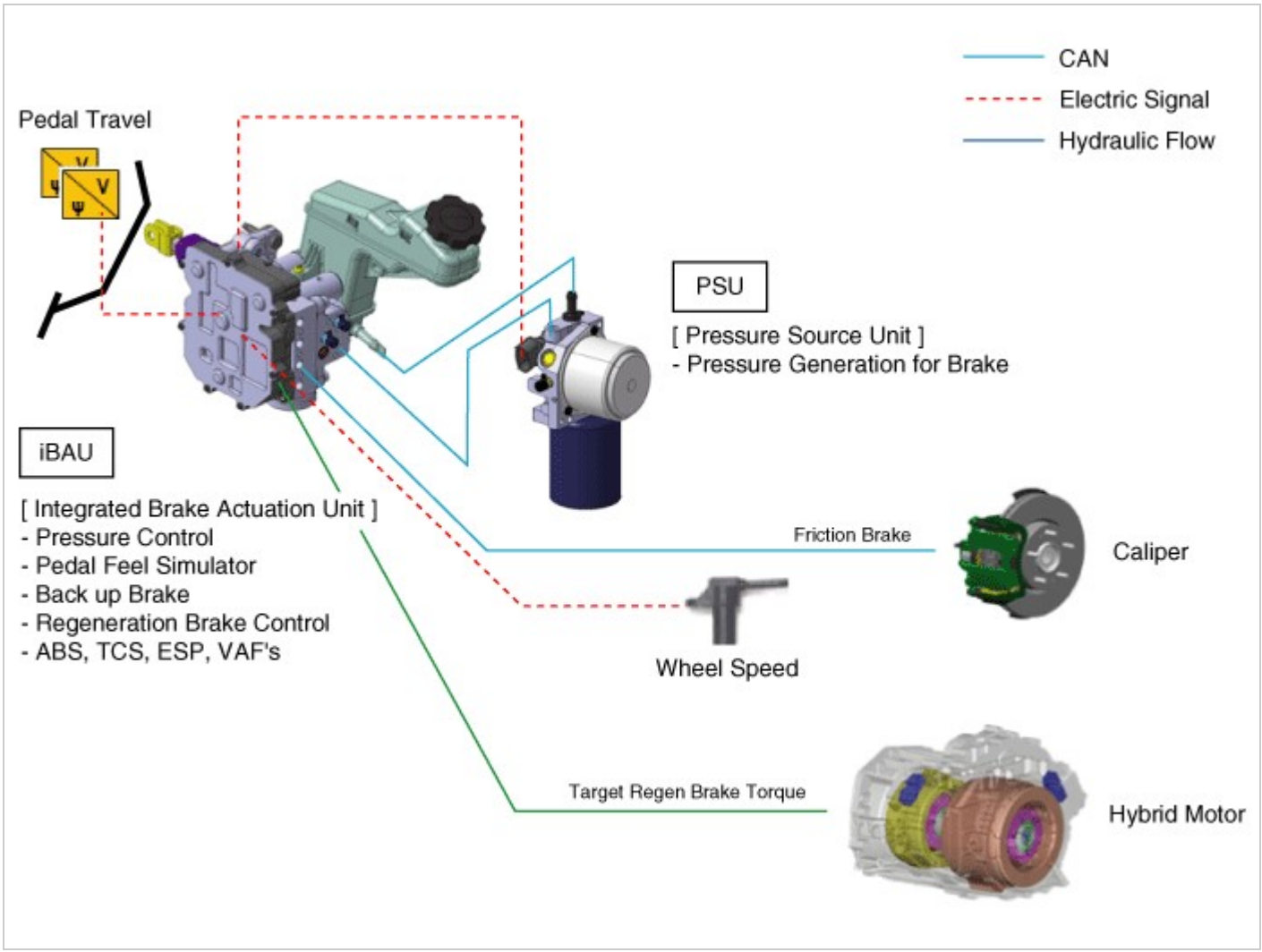

The AHB system is composed of the Pressure Source Unit (PSU), the Intergrated Brake Actuation Unit (IBAU).

First, the PSU generates the hydraulic pressure required for braking.

Similar to the boosting effect when the driver steps on the brake pedal in a system equipped with a vacuum booster, the hydraulic pressure stored in the cylinder is supplied to provide pressure throughout the entire brake line.

Second, the IBAU delivers pressure that is generated by the PSU to a caliper on each wheel. It is connected to the brake pedal to detect the brake force that is required by the driver, and to generate a brake feeling.

The IBAU carries out the ABS, TCS, and ESP functions as in conventional vehicles.

AHB System Operation Principals

1. Initial Status

IN 1,2	OUT 1,2	CUT 1,2	SIM	Motor
OFF(close)	OFF(close)	OFF(open)	OFF(close)	OFF

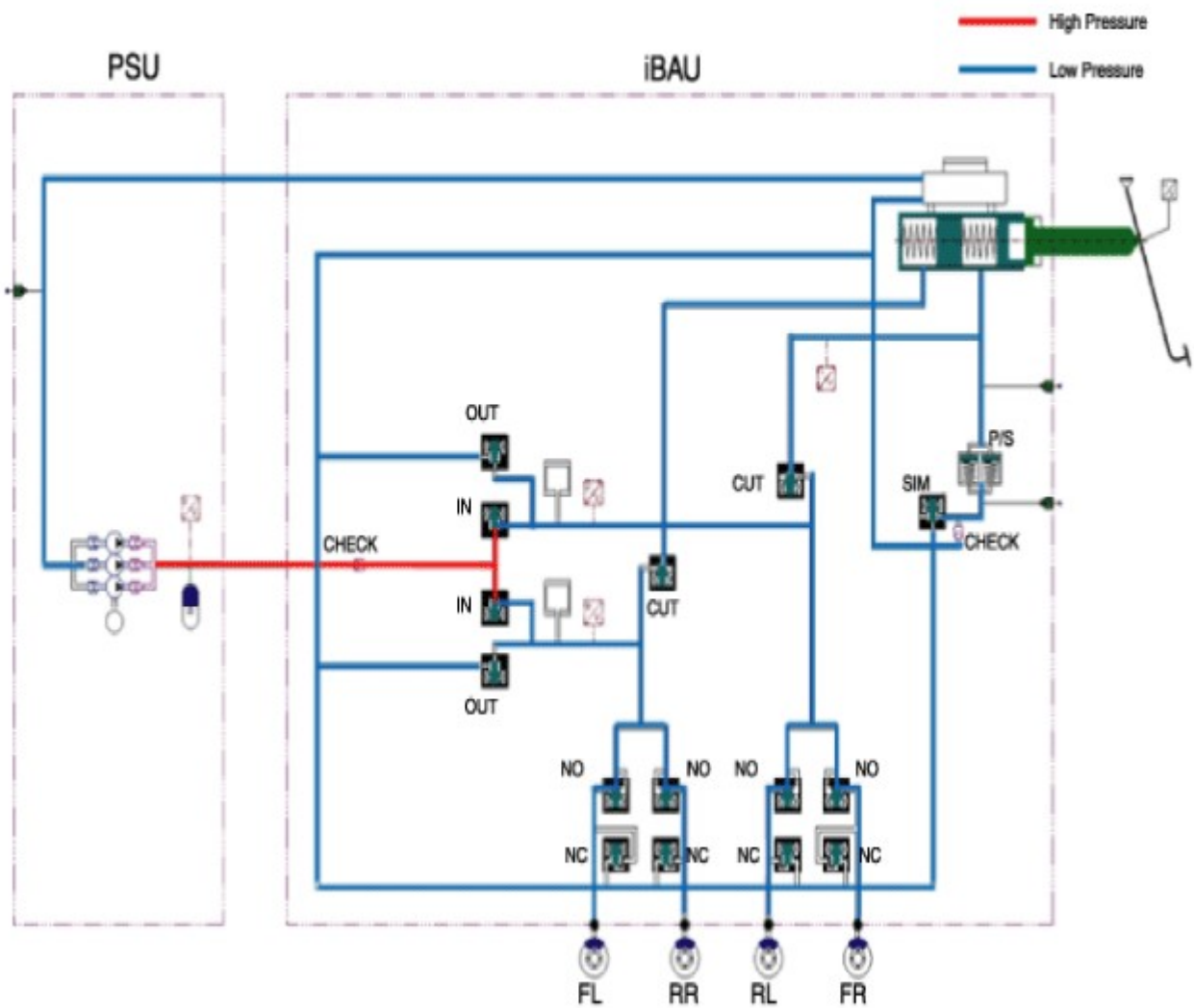

High pressure (180 bar) between the PSU and the IBAU is generated consistently. Therefore, before removing the PSU or the IBAU, high pressure between them should be reduced for safety by conducting "High pressure release mode" of GDS connected.

2. Brake operation

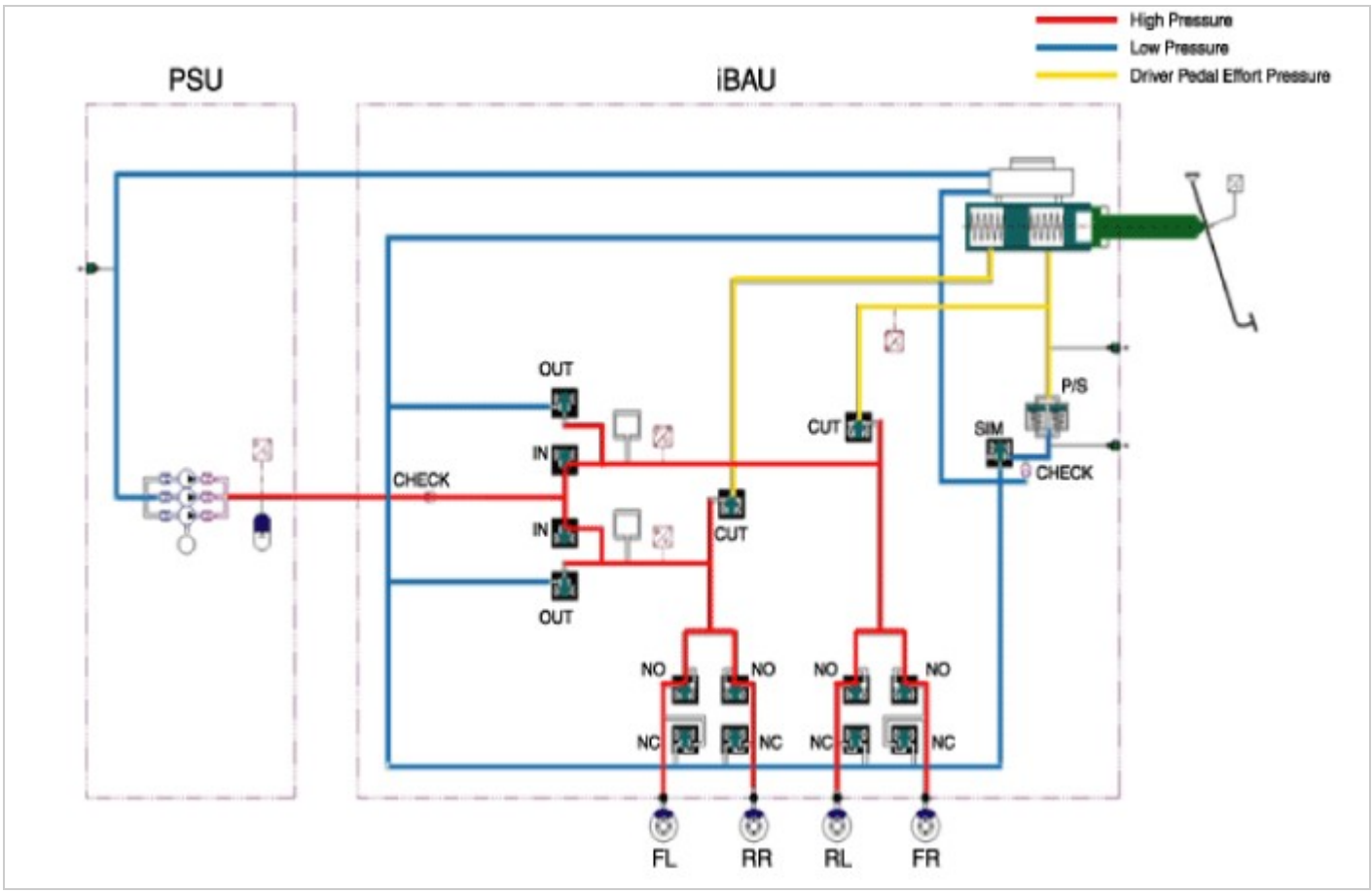

Apply Mode : During normal braking, IN valve becomes ON and opens; then, the high pressure generated by PSU is supplied to a caliper on each wheel by IBAU and the brake operation is engaged.

Release Mode : During discharging brake, OUT valve opens and IN valve closes; then, the high pressure of brake oil return back to reservoir. At this time, CUT valve is ON and it prevents back flow of brake oil to master cylinder.

3. Brake malfunction

IN 1,2	OUT 1,2	CUT 1,2	SIM	Motor
OFF(close)	OFF(close)	OFF(open)	OFF(close)	OFF

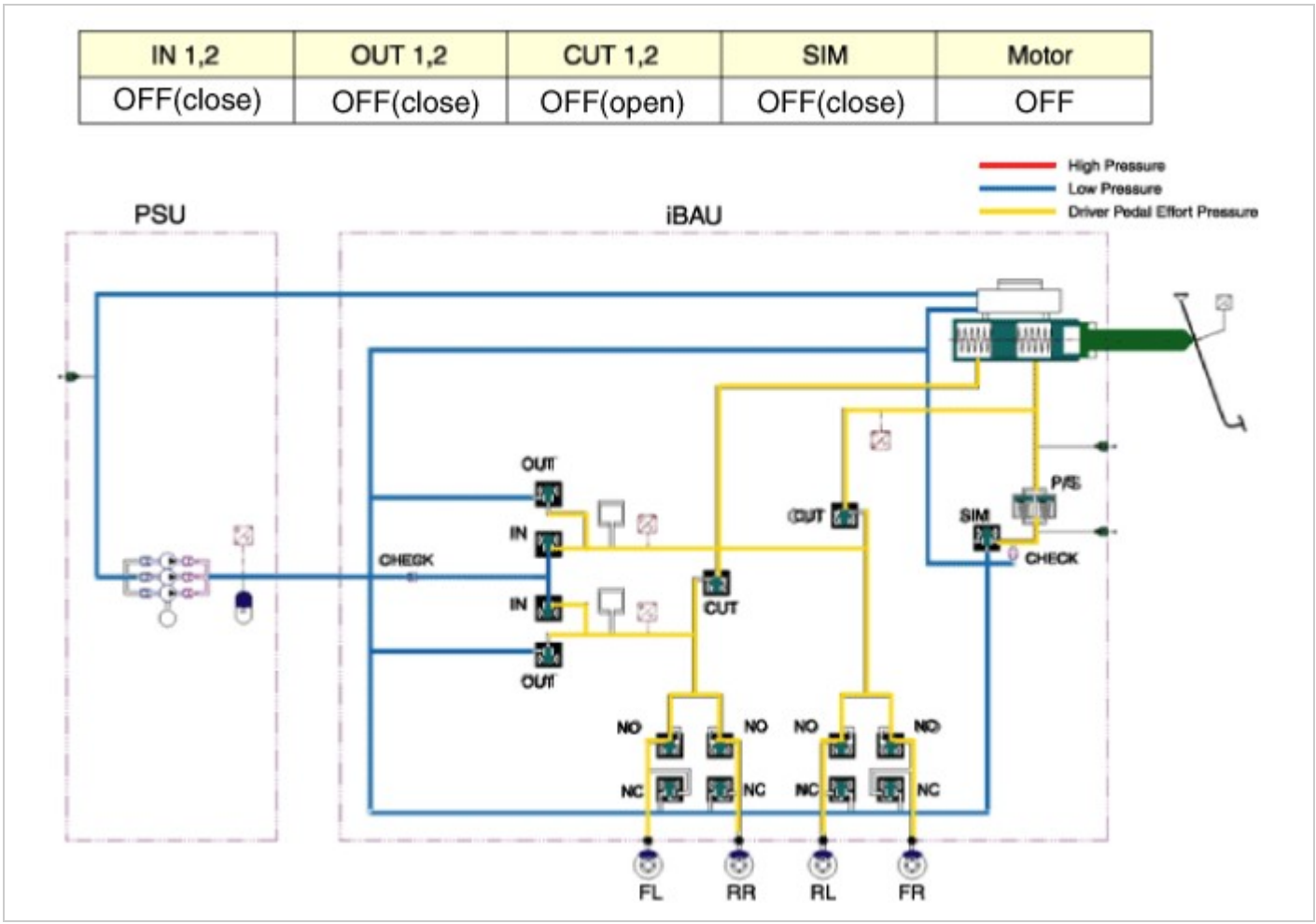

If the PSU or the IBAU is broken, IN valve and OUT valve are closed, and CUT valve is off. Therefore, the brake force is generated by only pressing a brake pedal manually by a driver.

Terminal Function

IBAU connector input/output

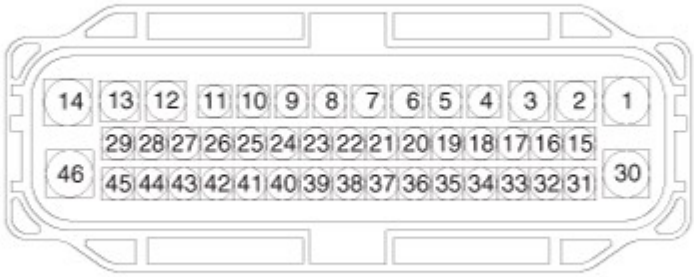

No	Description	No	Description
1	E/R Fuse & Relay Box (Multi Fuse - AHB)	24	Electric Parking Brake Switch (Auto Hold Swutch)
2	PSU Motor (+)	25	-
3	-	26	Parking Brake Switch
4	Shield Cable Ground	27	Rear Wheel Sensor LH (SIG)
5	E/R Fuse & Relay Box PSU Motor (GND)	28	Front Wheel Sensor LH (SIG)
6	Brake Pedal Module (PDT PWR)	29	Driver Door Switch
7	Brake Pedal Module (PDF PWR)	30	E/R Fuse & Relay Box (Multi Fuse - AHB 2)
8	E/R Fuse & Relay Box (Stop Signal Electronic Module)	31	Brake Pedal Module (PDF GND)
9	-	32	-
10	Brake Pedal Module (PDT GND)	33	Rear Wheel Sensor LH (VCC)
11	Shield Cable Ground	34	Rear Wheel Sensor RH (VCC)
12	-	35	-
13	PSU Motor (-)	36	Brake light switch
14	Ground	37	-
15	-	38	C-CAN (High)
16	Crash Pad Switch (ESC OFF Switch)	39	C-CAN (Low)
17	Front Wheel Sensor LH (VCC)	40	Vehicle Speed : Smart Key Control Module, PCM
18	Front Wheel Sensor RH (VCC)	41	-
19	P-CAN (High)	42	Front Wheel Sensor RH (SIG)
20	P-CAN (Low)	43	Rear Wheel Sensor RH (SIG)
21	ESS Drive	44	Stop Lamp Switch
22	Brake Pedal Module (PDT SIG)	45	-
23	Brake Pedal Module (PDF SIG)	46	Ground (GE06)

AHB Brake System Bleeding Procedure

Air Bleeding Tool Installation Procedure

CAUTION

- To prevent the brake fluid reservoir tank from beingdamaged and ensure the safety of worker, set thepressure of the gauge to the standard value beforeinstalling the SST.

1. Before installing the SST on the vehicle, close the airshut-off valve (A) to adjust the pressure gauge to thestandard value.

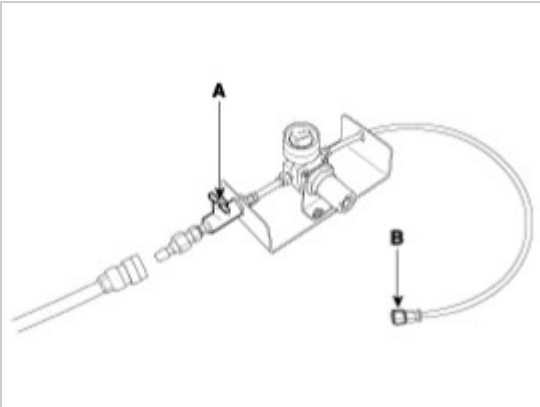

⚠ CAUTION

- For safety of worker and correct pressure setting,make sure that the plug (B) is installed correctly.

2. After connecting an air hose and opening the airshut-off valve (A), adjust the pressure gauge (B) withto the standard value.
   Standard pressure value :
   0.3 - 0.5 MPa (43.5 - 72.5 psi)

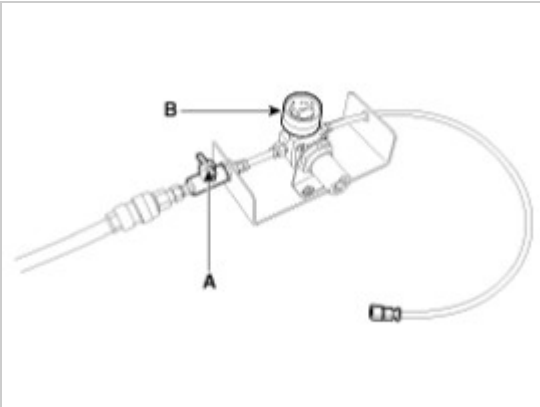

3. close the air shut off valve (A) and remove the plug(B).

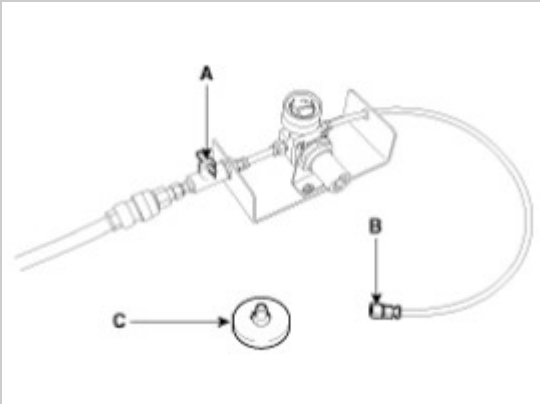

⚠ CAUTION

- For safety of worker, make sure that the air shut offvalve is closed and remove the plug.

4. Remove the brake reservoir tank cap.
5. Install the cap (A) of SST (0k585-E8100) on thereservoir tank.

6. Make sure the check valve (A) is closed and connect SST (09580-3D100) (A) to the adapter (B).

Air Bleeding Tool Removal Procedure

1. To remove the SST (09580-3D100) from the vehicle,close the air shut-off valve (A) first.

2. Remove SST (09580-3D100) and the cap of SST (0k585-E8100) on the reservoir tank.

NOTICE

- To prevent backflow of brake fluid, be sure to open the air shut-off valve slowly then bleed air in the reservoir tank.

3. Inatall the brake reservoir tank cap.

AHB Brake System

Bleeding Step 1 (IBAU ECU OFF)

NOTICE

- IBAU filled with brake oil should be used for bleeding.

1. Disconnect the negative (-) battery terminal to turn off IBAU ECU.
2. Set the air bleeding tool (SST : 09580-3D100) and the cap of SST (0k585-E8100) to reservoir tank and make pressure (0.3-0.5MPa (43.5-72.5psi)) to it.

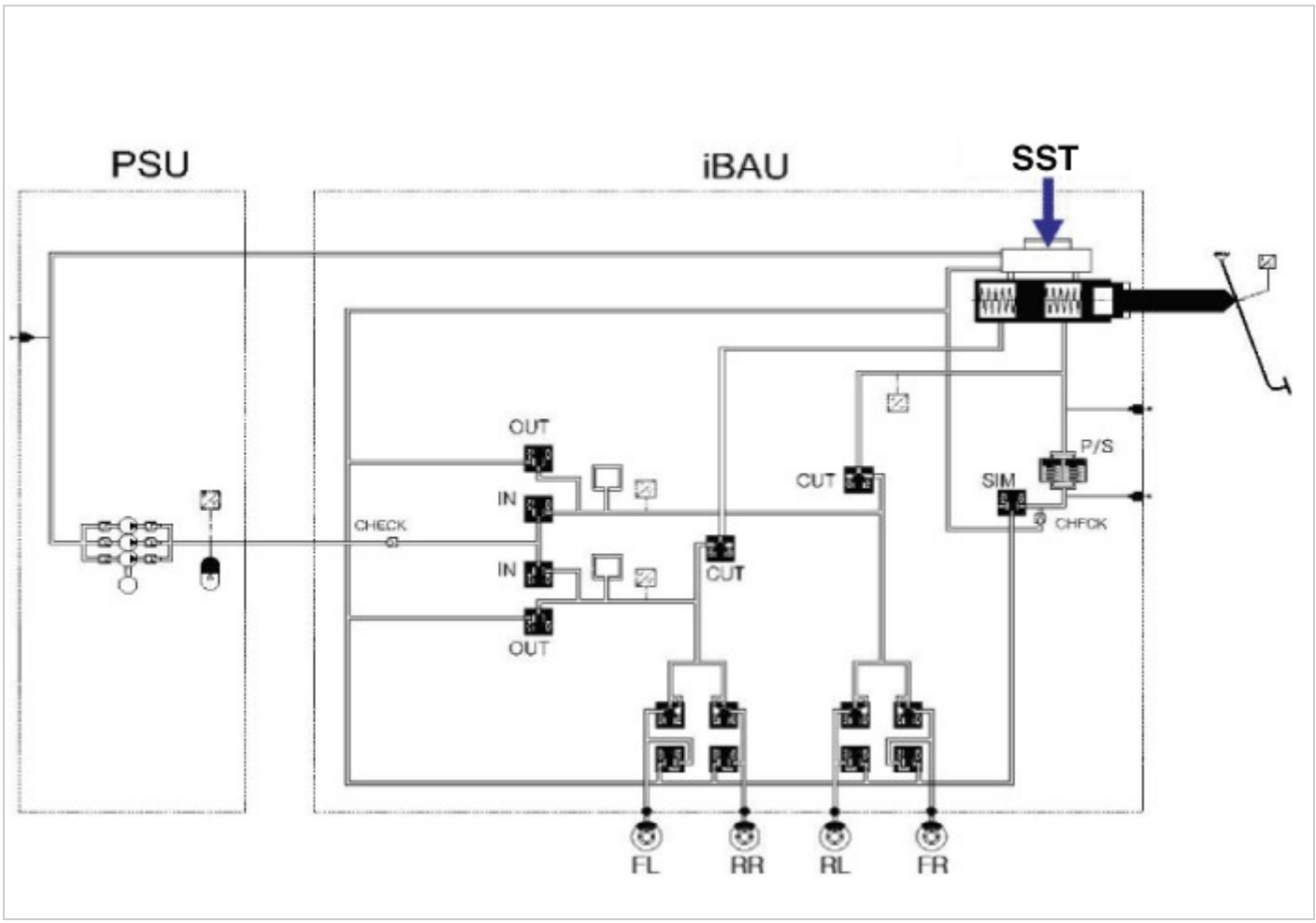

3. Initiate air bleeding on all bleed screws in the following sequences until air bubbles no longer appear in the fluid. After air bleeding, close the bleed screws.
   Bleed screw sequence : ① PSU ② IBAU (2 bleed srews)

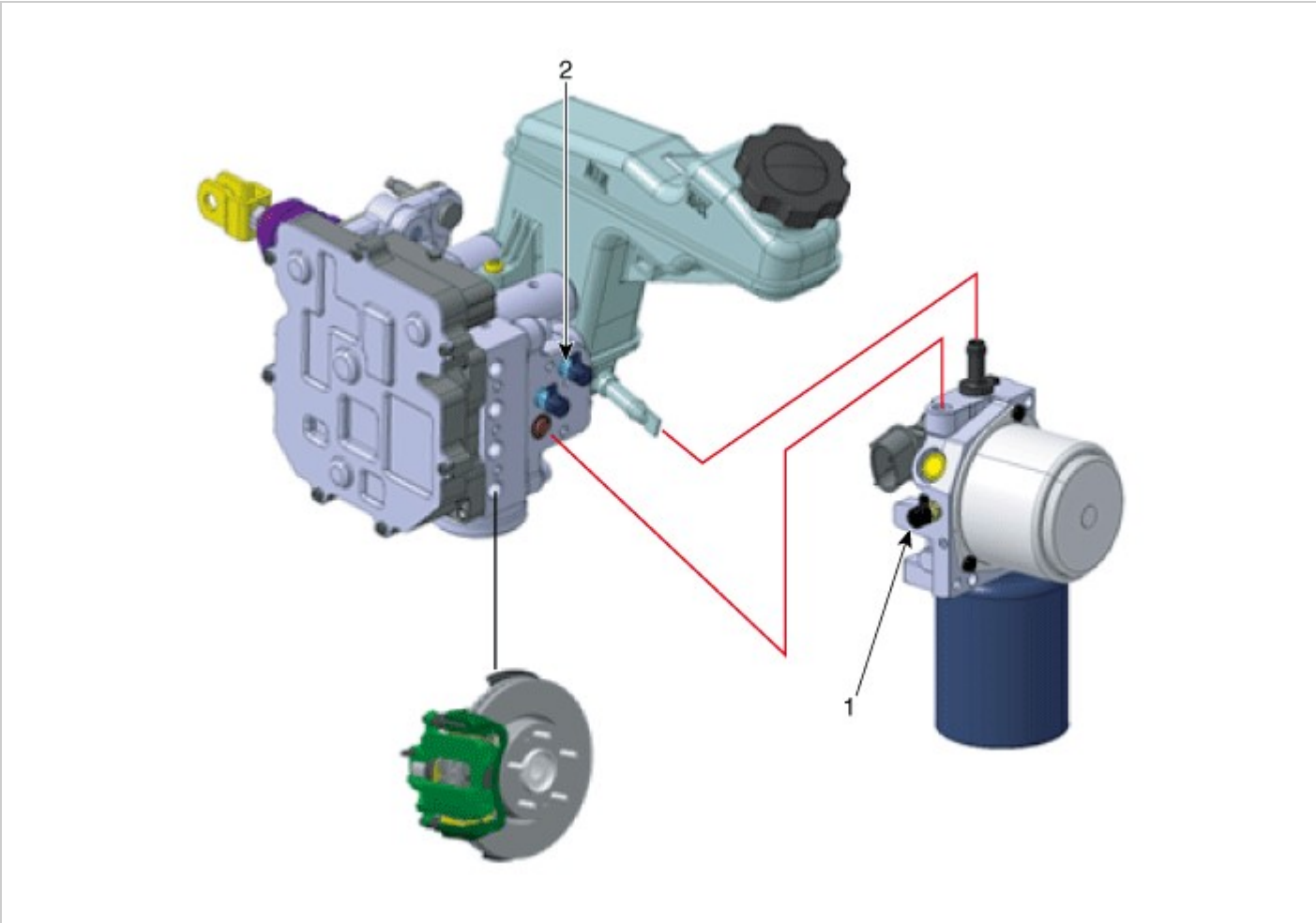

4. Perform air bleeding while stepping on the brake pedal and opening bleed screws; then, close bleed screws and release the brake pedal. Perform this procedure 10 times.
   – Bleed screw sequence : ② IBAU (2 bleed srews)

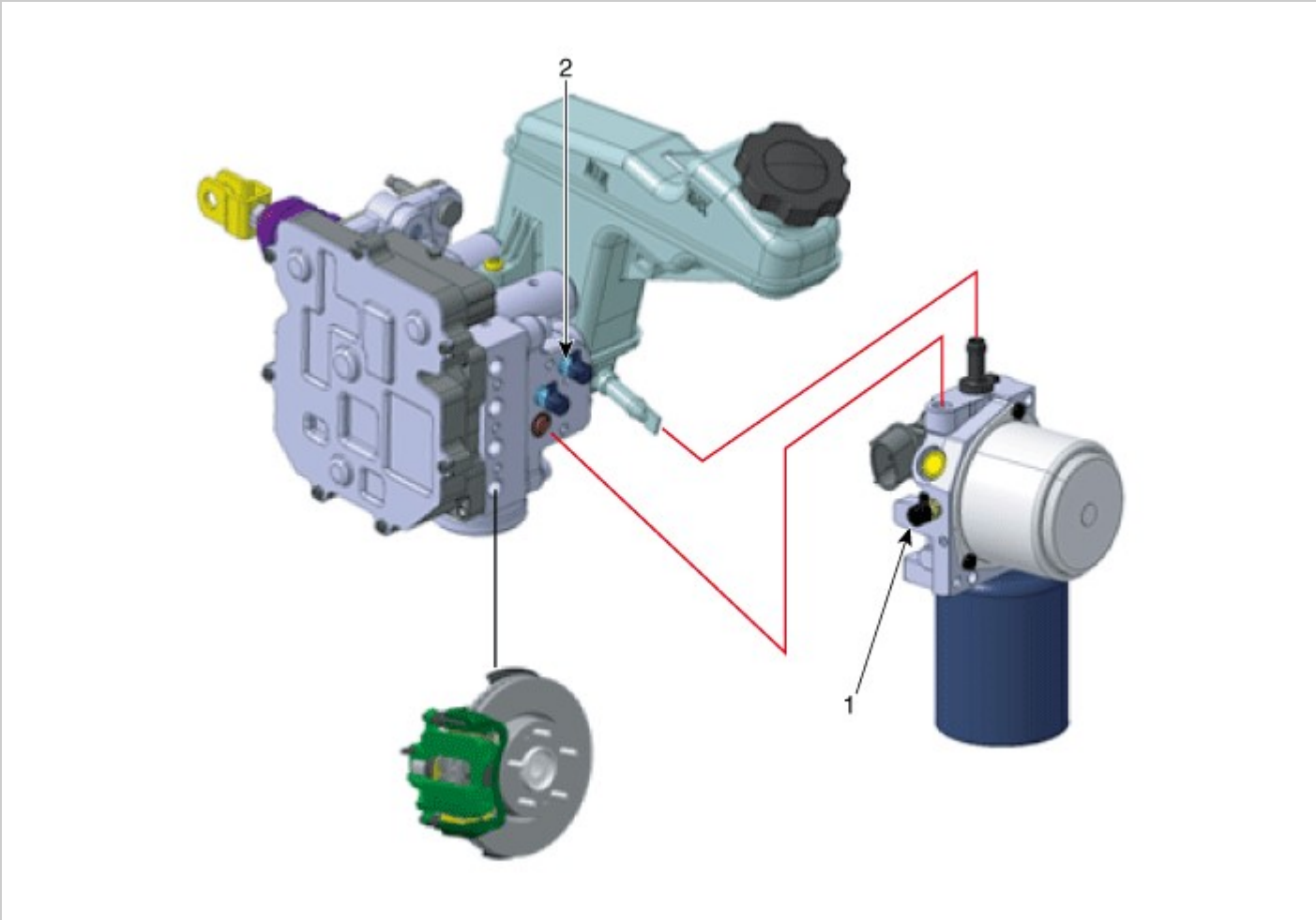

NOTICE

- Repeat it until air bubbles no longer appear in the fluid
- Be cautious that air come in the brake line with opening the bleed screws too much.

Bleeding Step 2 (IBAU ECU ON)

1. Connect the negative (-) battery terminal to turn on IBAU ECU.
2. Set the ECU S/W to air bleeding mode on the brake system.

NOTICE

Air bleeding mode

(1) Before setting air bleeding mode, make sure to set the front wheels straight forward and the shift lever knob in Parking.

(2) Keep pushing the VDC OFF button and in about 3 seconds ESC function will be fully deactivated. Then press and release the brake pedal 10 times while pushing the VDC OFF switch.

NOTICE

- Make sure to press the brake pedal more than 40mm and release it fully without any step on.

(3) Turn off the engine start button while keep pushing the VDC OFF switch. then, start the engine and push VDC OFF switch for 3seconds to fully deactivate VDC function.

NOTICE

- Air Bleeding mode is set if all the ABS, VDC and Brake warning lamps turn on.

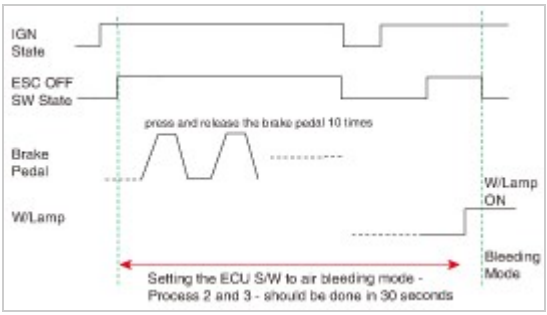

Information

The air bleeding mode is deceased in each following condition.

1) IGN OFF and shift lever knob in D/R/N
2) Detecting DTC
3) Brake fluid level is under "MIN".
4) Turn off the "VDC off" switch.

3. Use the air bleeding tool (SST : 09580-3D100, 0K585-E8100) and feed oil pressure 0.3-0.5MPa (43.5-72.5psi) into the reservoir.
   Loosen the bleed screws on 4 wheels; then, initiate air bleeding and close them while depressing the brake pedal half stroke continuously. Perform it 10 times; then, release the brake pedal.
   Bleed screw sequence : ③ 4 wheels

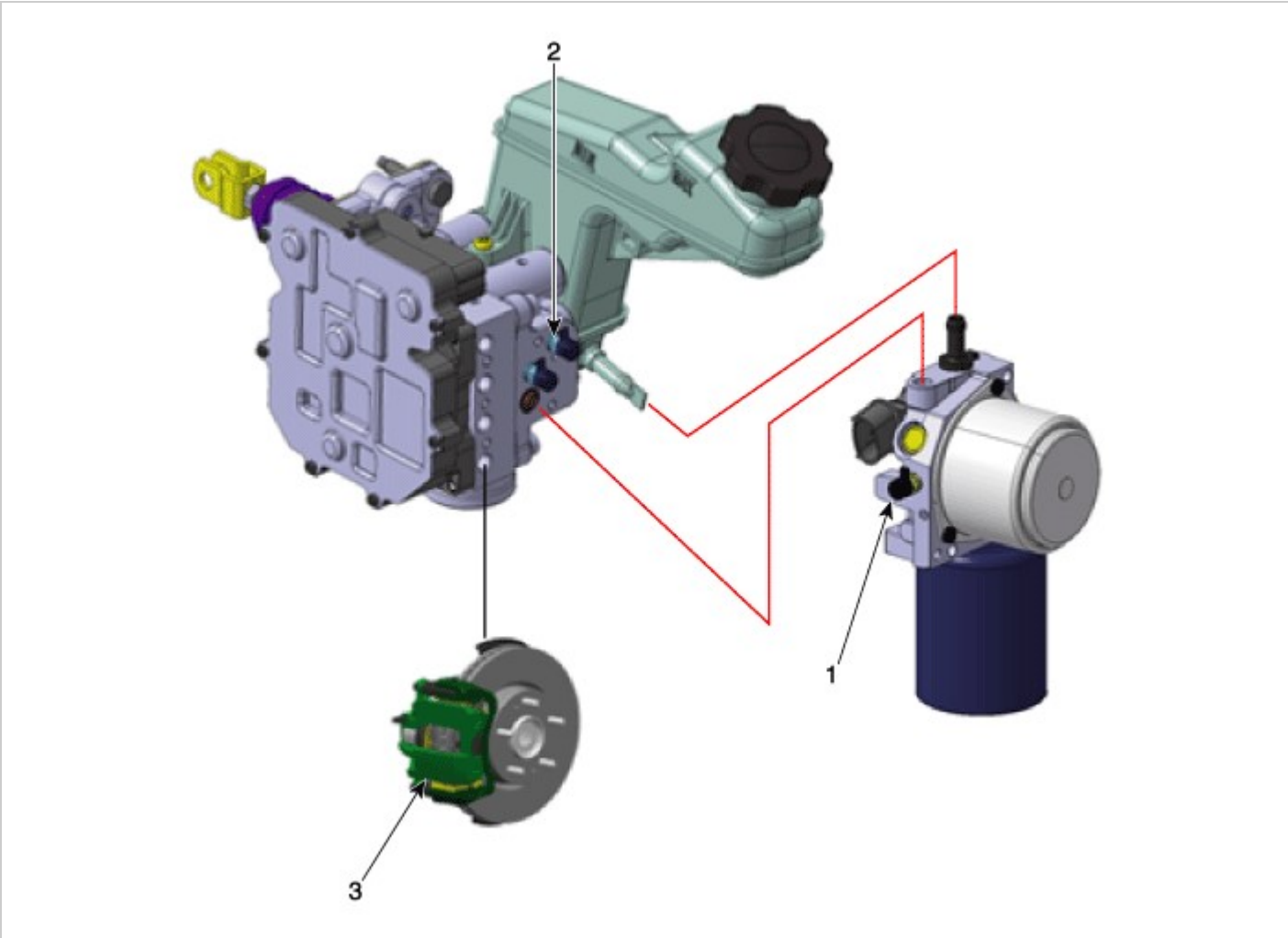

NOTICE

- Repeat it until air bubbles no longer appear in the fluid.
- Be cautious that air come in the brake line with opening the bleed screws too much.

4. Connect the GDS to the data link connector located underneath the dash panel and perform "Fluid Circulation Mode" on GDS.

Components

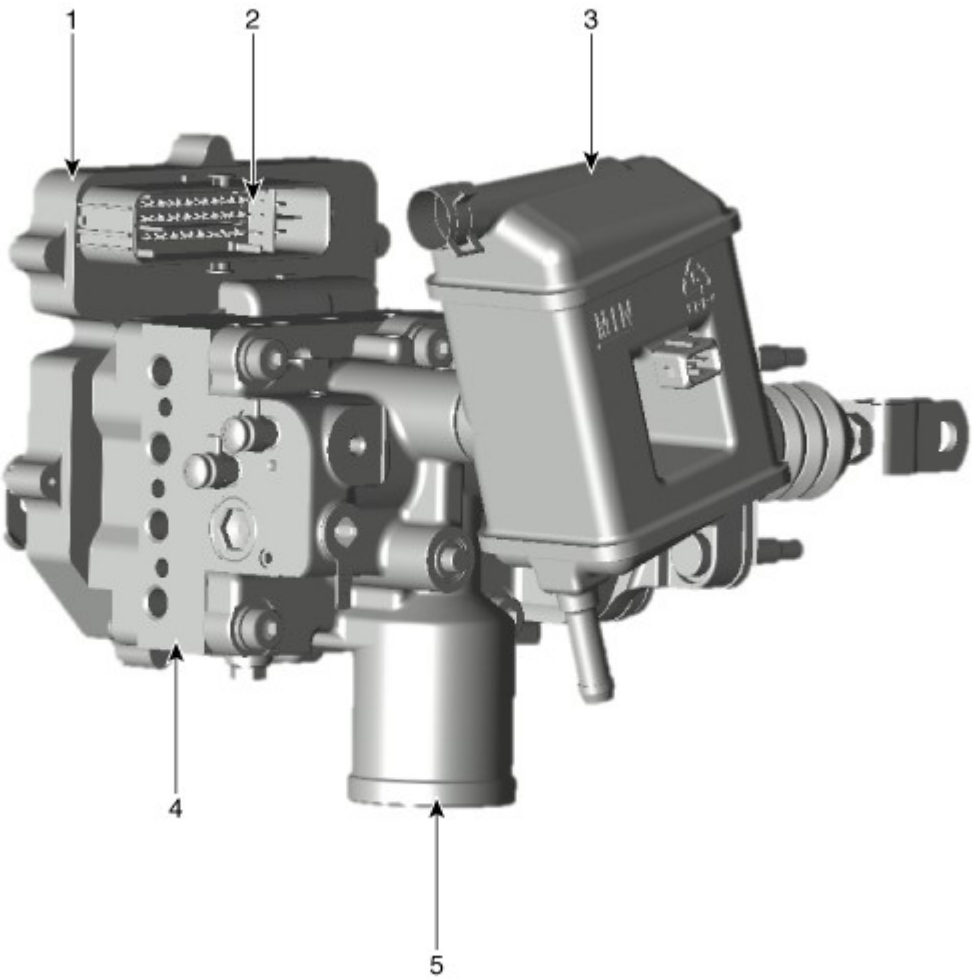

⚠ CAUTION

- IBAU (Intergrated Brake Actuation Unit) must not be disassembled.

1. Intergrated Brake Actuation Unit (IBAU) ECU
2. Intergrated Brake Actuation Unit (IBAU) connector
3. Reservoir
4. Intergrated Brake Actuation Unit (IBAU)
5. Pedal simulator

Brake System

Removal

1. Turn ignition switch OFF and disconnect the negative (-) battery cable.
2. Disconnector TCM connector (A).
3. Disconnector TCM connector (B).

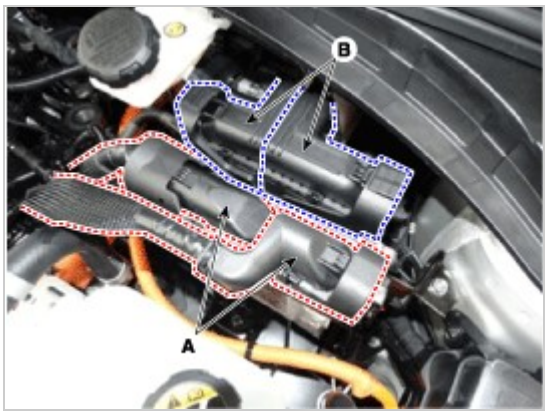

4. Loosen the bolt & nut (A) then remove the ECM, TCM with bracket (B).

5. Remove the air cleaner.
   (Refer to Engine Mechanical System - "Air cleaner")

6. Remove the brake fluid from the reservoir with a syringe.

> **NOTICE**
> - Do not spill brake fluid on the vehicle, it may damage the paint; if brake fluid does contact the paint, wash it off immediately with water.
> - To prevent any dust entering in the reservoir, the reservoir cap should be closed again after removing brake fluid.

7. Disconnect the brake hose from the reservoir.

8. Disconnect the brake fluid level switch connector (A).

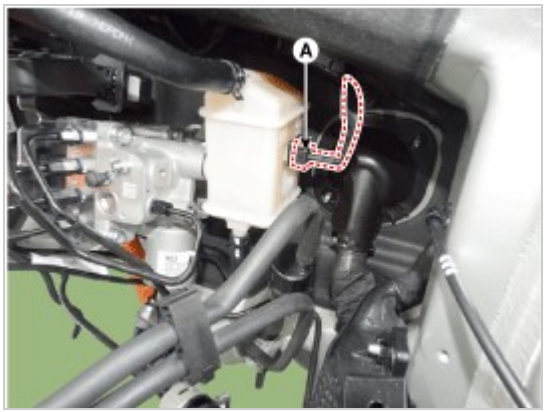

9. Disconnect IBAU connecter.

10. Disconnect the brake tube from the IBAU (Intergrated Brake Actuation Unit) by loosening the tube flare nut.

Tighten torque :
13.7 - 16.7 N.m (1.4 - 1.7 kgf.m, 10.1 - 12.3 lb-ft)

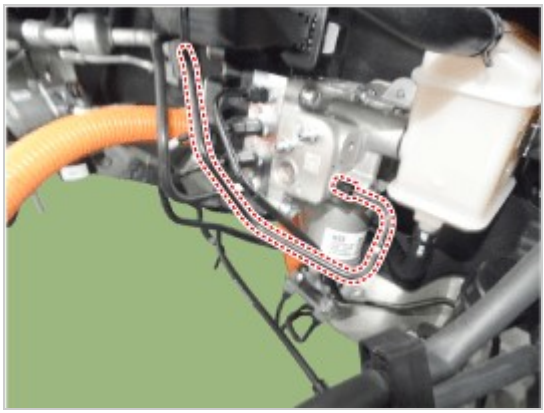

⚠ CAUTION

- Before removing the brake tube, high pressure in an accumulator of PSU should be reduced for safety by conducting "High pressure release mode" of GDS connected.

11. Disconnect the brake tube from the IBAU (Intergrated Brake Actuation Unit) by loosening the tube flare nut.

Tighten torque :
13.7 - 16.7 N.m (1.4 - 1.7 kgf.m, 10.1 - 12.3 lb-ft)

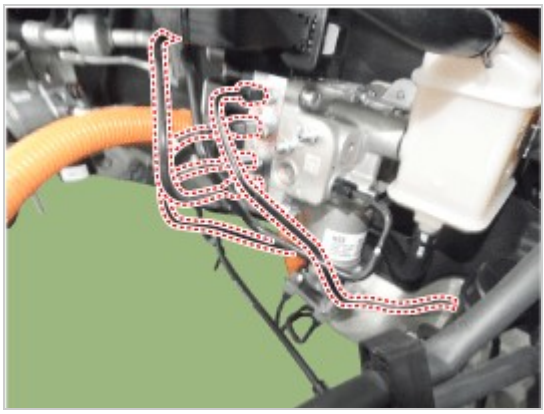

12. Remove the rear brake tube.

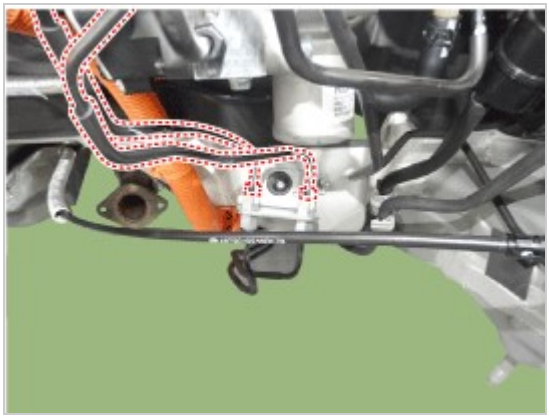

13. Remove the snap pin (A) and clevis pin (B).

14. Remove the mounting nuts (A) and then remove the brake pedal.

Tightening torque :
16.7 - 25.5 N.m (1.7 - 2.6 kgf.m, 12.3 - 18.8 lb-ft)

Installation

1. Installation is the reverse of removal.
2. Check the brake pedal operation.
3. After filling the brake fluid in the reservoir, perform the air bleed.
   (Refer to the AHB System - "AHB System Air Bleeding")
4. Conduct Brake Pedal Traval sensor(PTS) calibration.
   (Refer to the Brake System - "Brake Pedal")
5. Conduct Longitidinal G Sensor Clibration. [HAC/DBC only]
6. Conduct Pressure sensor Calibration.

Diagnostic Procedure Using GDS

The following section describes how to diagnose faults using a diagnostic instrument.

1. Connect the diagnostic instrument to the self-diagnostic connector (16-pin) beneath the crash pad on the side of driver"s seat, and then turn on the ignition to activate the diagnostic instrument.
2. In the GDS Vehicle Type Selection menu, select "Vehicle Type" and "ABS/ESC" System, and then opt for "OK."

Brake Pedal Sensor Calibration

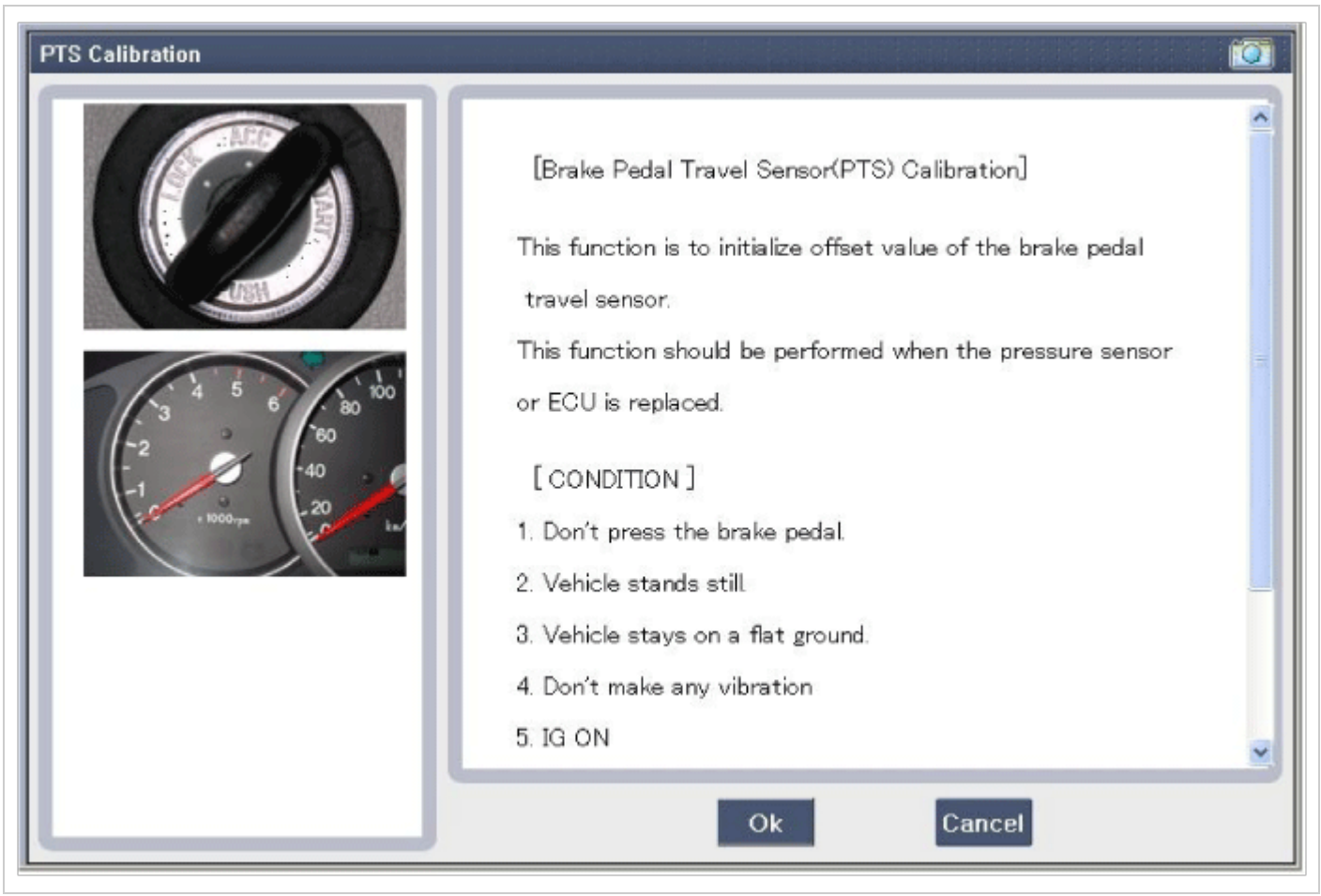

Pressure Sensor Calibration

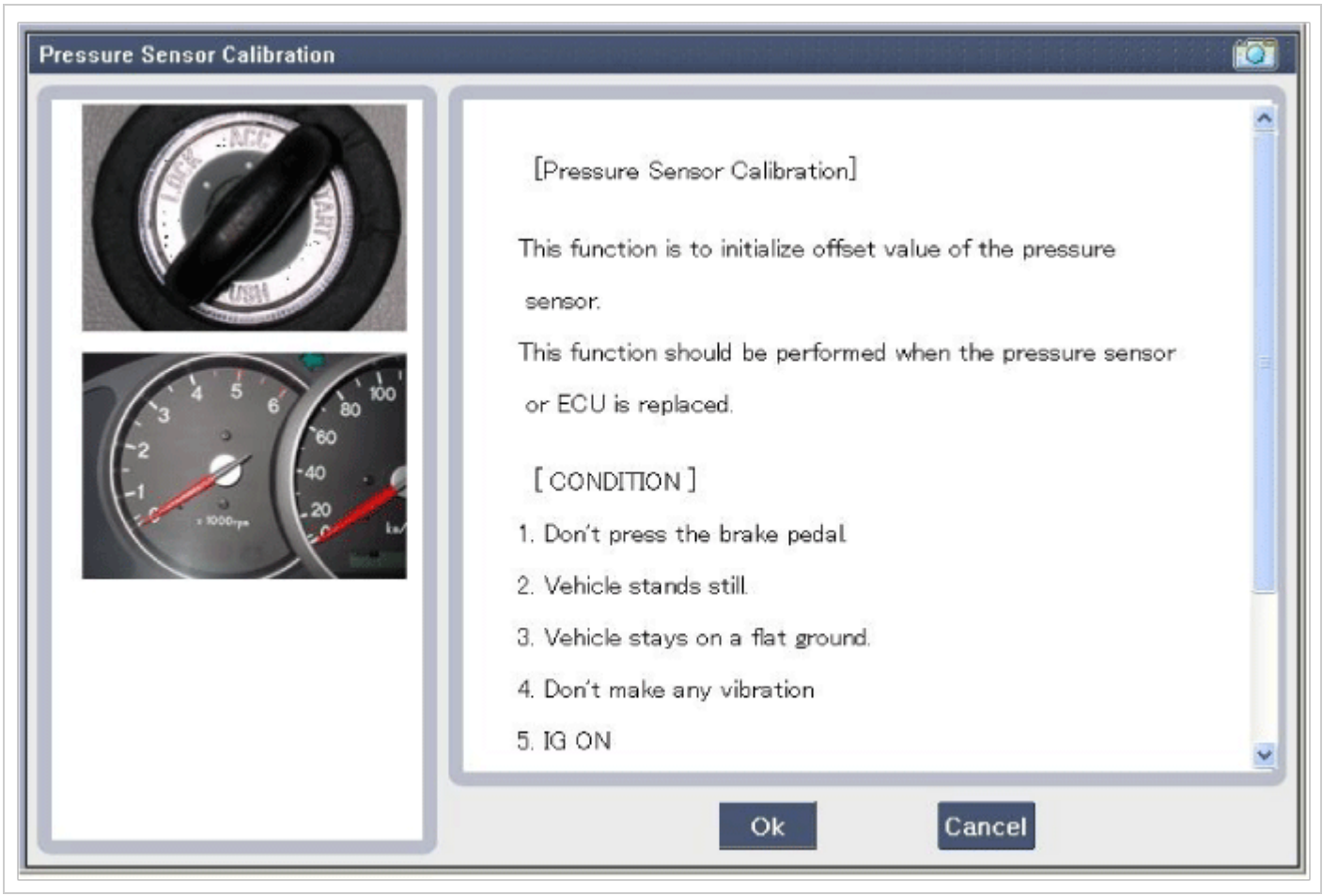

[Auto Detected Configuration Reset]

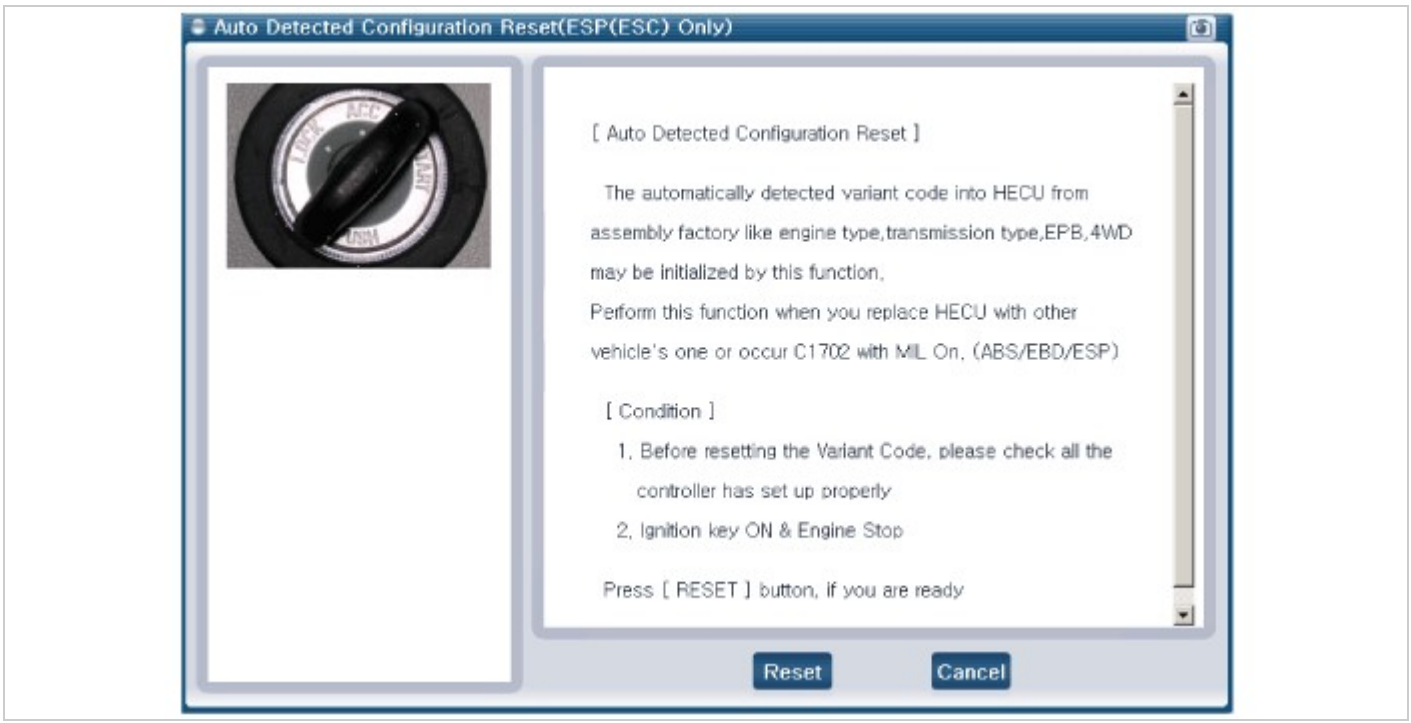

[Longitidinal G Sensor Clibration]

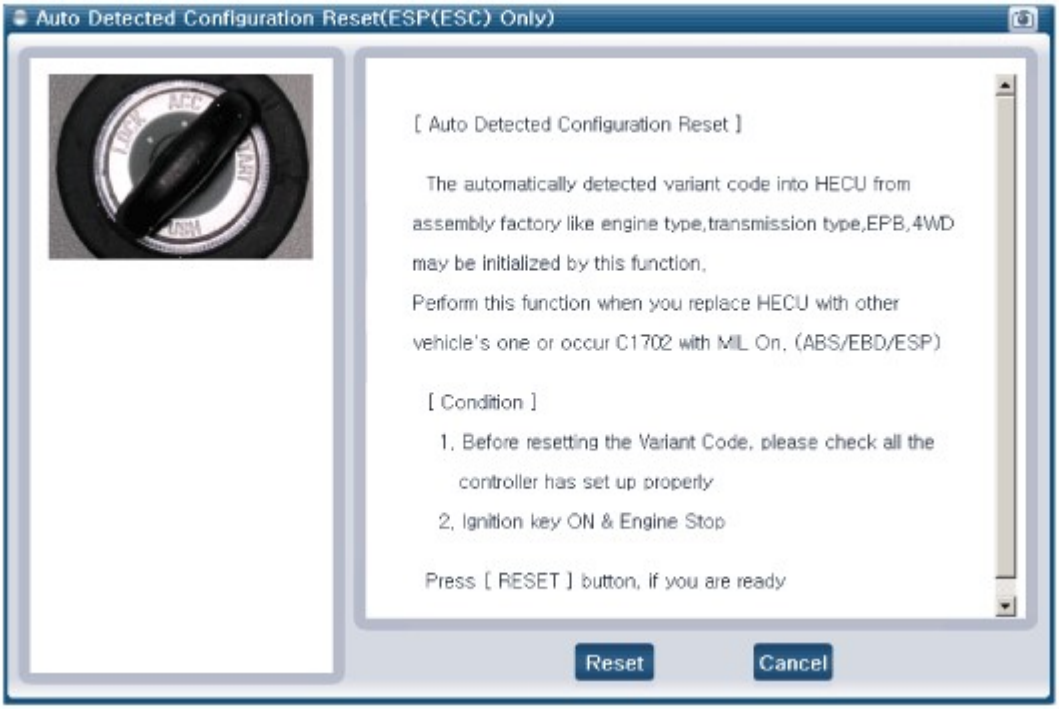

3. Turn ignition switch off and on after calibration procedure.
4. Confirm success of calibration.

Brake System

Components

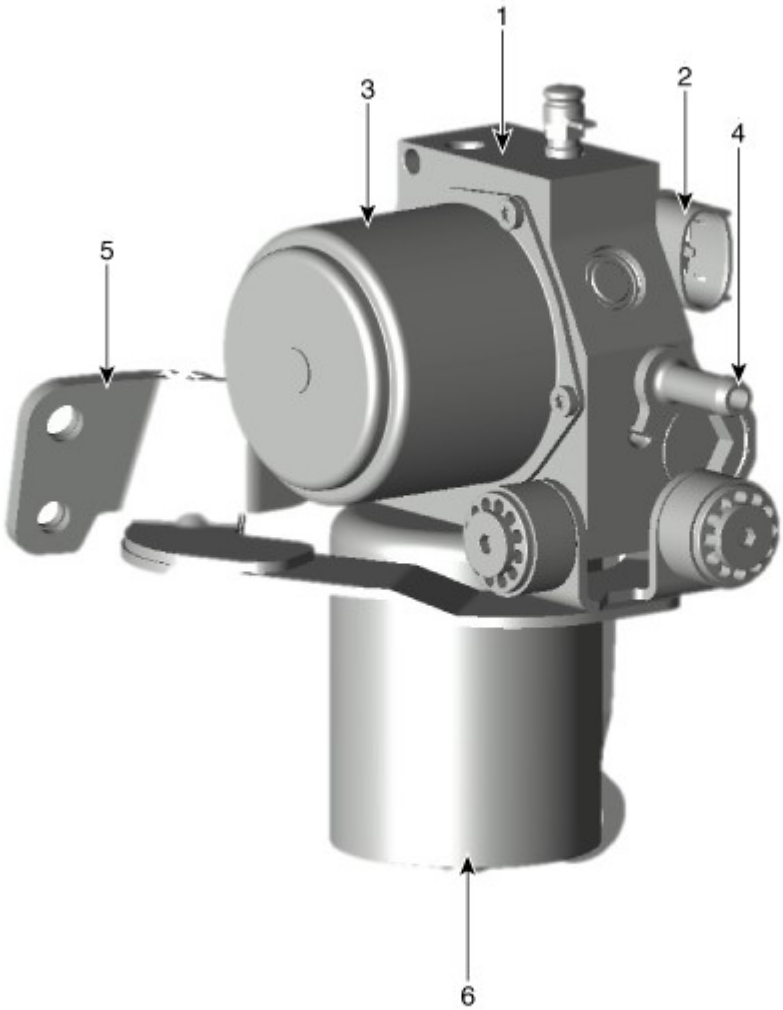

CAUTION

- PSU (Presser Source Unit) must not be disassembled.

1. Pressure Source Unit (PSU)
2. Pressure Source Unit (PSU) connector
3. Motor
4. Filler adapter
5. Bracket
6. Accumulator

Removal

1. Turn ignition switch OFF and disconnect the negative (-) battery cable.
2. Remove the wiring bracket.

3. Remove the brake fluid from the reservoir with a syringe.

NOTICE

- Do not spill brake fluid on the vehicle, it may damage the paint; if brake fluid does contact the paint, wash it off immediately with water.
- To prevent any dust entering in the reservoir, the reservoir cap should be closed again after removing brake fluid.

4. Loosening the flare nut (A) and then disconnect the brake tube.

Tightening torque :
13.7 - 16.7 N.m (1.4 - 1.7 kgf.m, 10.1 - 12.3 lb-ft)

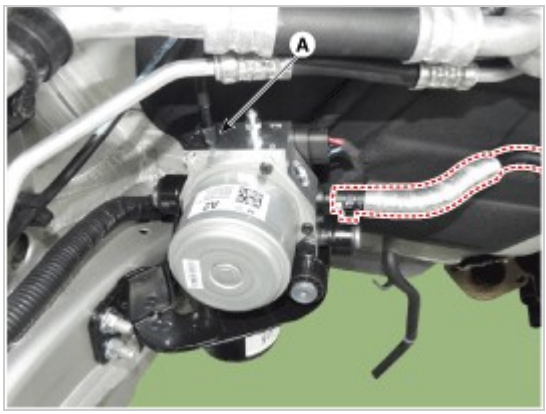

CAUTION

- Before removing the brake tube, high pressure in an accumulator of PSU should be reduced for safety by conducting "High pressure release mode" of GDS connected to LF HEV.

5. Disconnect the PSU connector.

6. Remove the front sub frame.
   (Refer to Suspension System - "Sub Frame")
7. Loosen the mounting bolt and nut then remove the PSU.

Tighten torque :
19.6 - 29.4 N.m (2.0 - 3.0 kgf.m, 14.5 - 21.7 lb-ft)

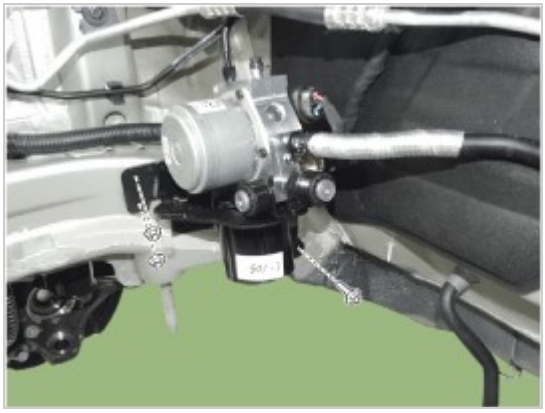

Installation

1. Installation is the reverse of removal.
2. Tighten the PSU bracket bolts and brake tube to the specified torque.
3. After filling the brake fluid in the reservoir, perform the air bleed. .
   (Refer to AHB System - "AHB System Air Bleeding")
4. Conduct Pressure sensor Calibration.
5. Check the brake pedal operation.

Diagnostic Procedure Using GDS

The following section describes how to diagnose faults using a diagnostic instrument.

1. Connect the diagnostic instrument to the self-diagnostic connector (16-pin) beneath the crash pad on the side of driver"s seat, and then turn on the ignition to activate the diagnostic instrument.
2. In the GDS Vehicle Type Selection menu, select "Vehicle Type" and "ABS/ESC" System, and then opt for "OK."

Pressure sensor Calibration

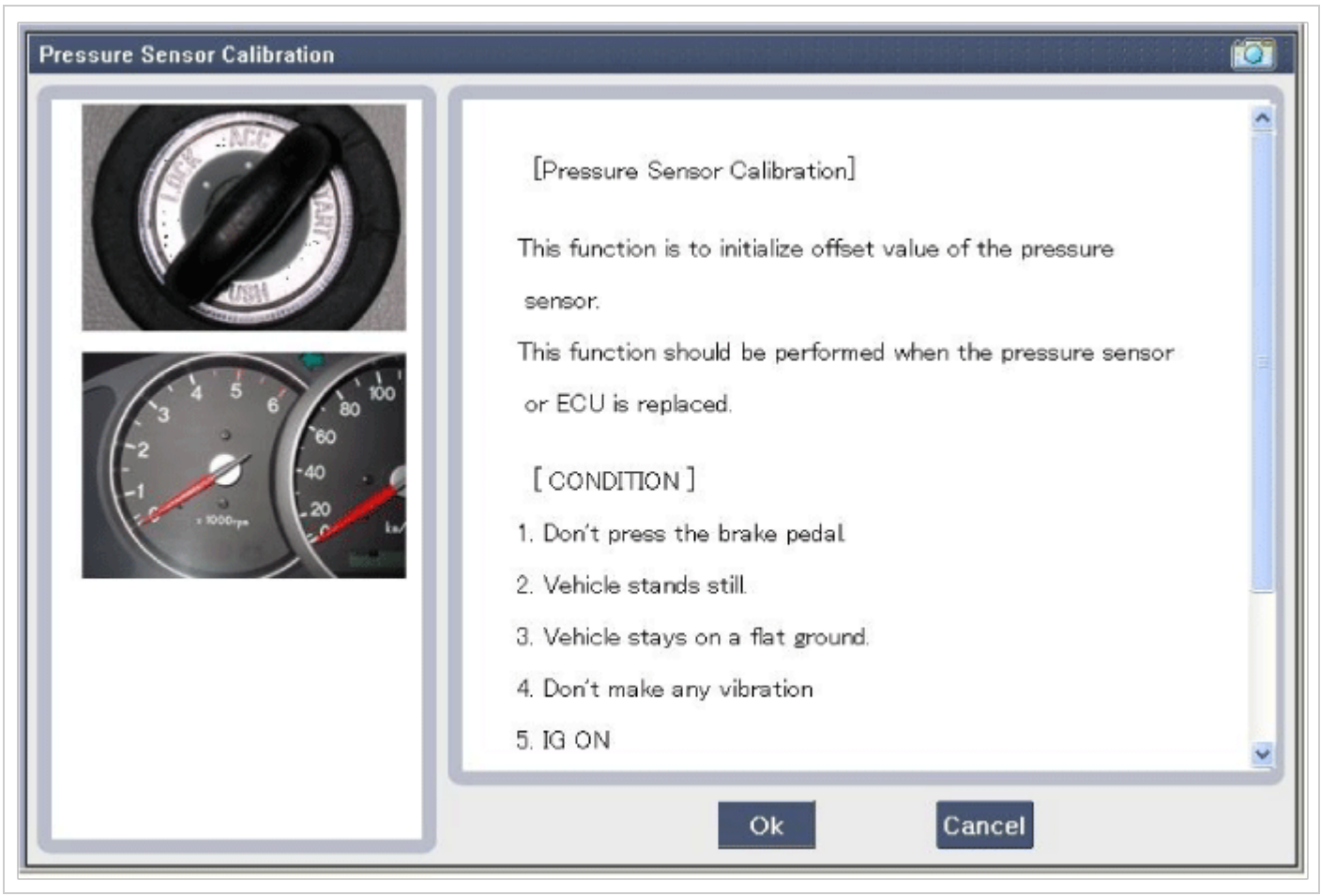

3. Turn ignition switch off and on after calibration procedure.
4. Confirm success of calibration.

Components

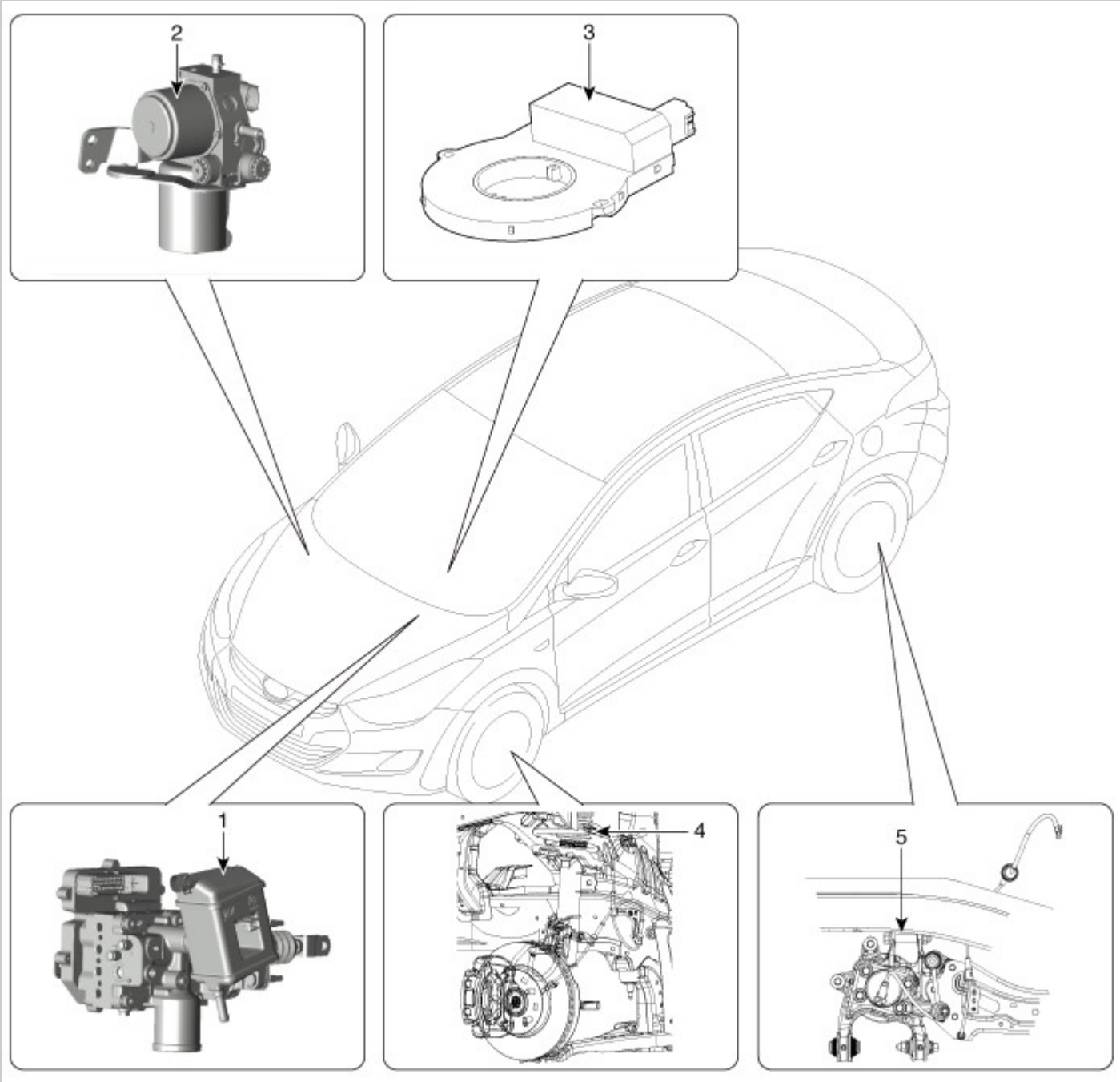

1. IBAU (Intergrated Brake Actuation Unit)
2. Pressure Source Unit (PSU)
3. Steering angle snesor
4. Front wheel speed sensor
5. Rear wheel speed sensor

Description of ESC

Optimum driving safety now has a name : ESC, the Electronic Stability Program.

ESC recognizes critical driving conditions, such as panic reactions in dangerous situations, and stabilizes the vehicle by wheel-individual braking and engine control intervention with no needfor actuating the brake or the gas pedal.

ESC adds a further function known as Active Yaw Control (AYC) to the ABS, TCS, EBD and ESC functions. Whereas the ABS/TCS function controls wheel slip during braking and acceleration and, thus, mainly intervenes in the longitudinal dynamics of the vehicle, active yaw control stabilizes the vehicle about its vertical axis.

This is achieved by wheel individual brake intervention and adaptation of the momentary engine torque with no need for any action to be taken by the driver.

ESC essentially consists of three assemblies : the sensors, the electronic control unit and the actuators.

Of course, the stability control feature works under all driving and operating conditions. Under certain driving conditions, the ABS/TCS function can be activated simultaneously with the ESC function in rESConse to a command by the driver.

In the event of a failure of the stability control function, the basic safety function, ABS, is still maintained.

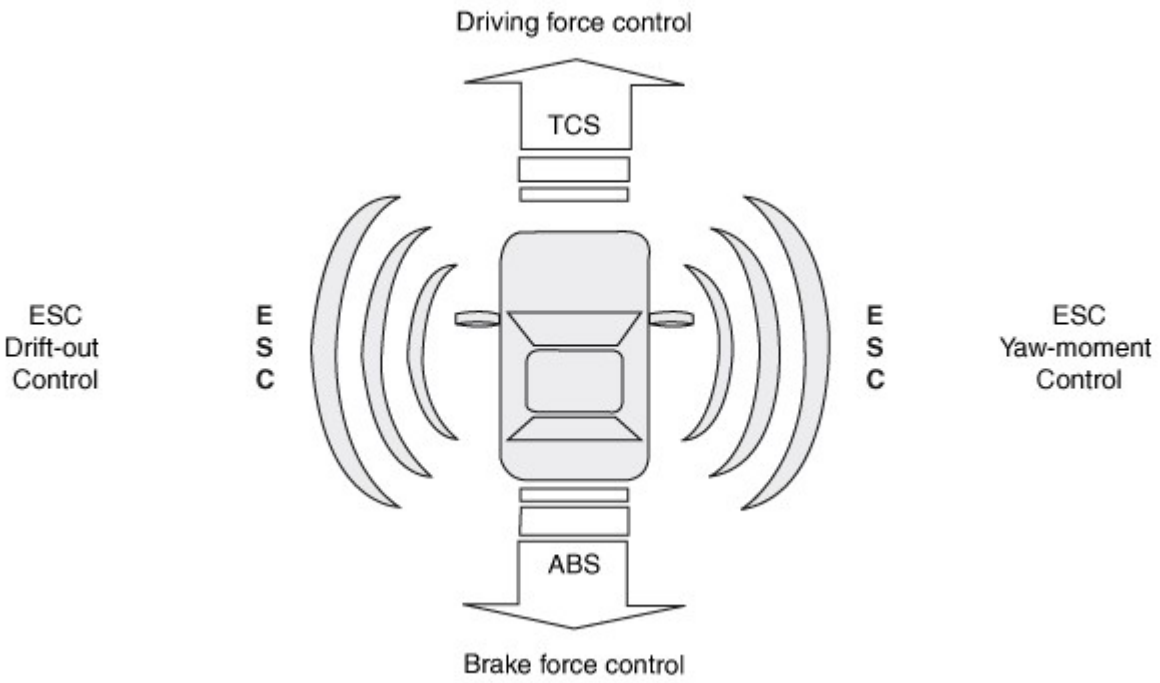

Description of ESC Control

ESC system includes ABS/EBD, TCS and AYC (Active yaw control) function.

ABS/EBD function : The ECU changes the active sensor signal (current shift) coming from the four wheel sensors to the square waveform.By using the input of above signals, the ECU calculates the vehicle speed and the acceleration & deceleration of the four wheels.And, the ECU judges whether the ABS/EBD should be actuated or not.

TCS function prevents the wheel slip of drive direction by adding the brake pressure and engine torque reduction via CAN communication.TCS function uses the wheel speed sensor signal to determine the wheel slip as far as ABS function.

AYC function prevents unstable maneuver of the vehicle. To determine the vehicle maneuver, AYC function uses the maneuver sensor signals (Yaw Rate Sensor, Lateral Acceleration Sensor, Steering Wheel Angle Sensor).

If vehicle maneuver is unstable (Over Steer or Under Steer), AYC function applies the brake pressure on certain wheel, and send engine torque reduction signal by CAN.

After the key-on, the ECU continually diagnoses the system failure. (self-diagnosis)If the system failure is detected, the ECU informs driver of the system failure through the BRAKE/ABS/ESC warning lamp. (fail-safe warning)

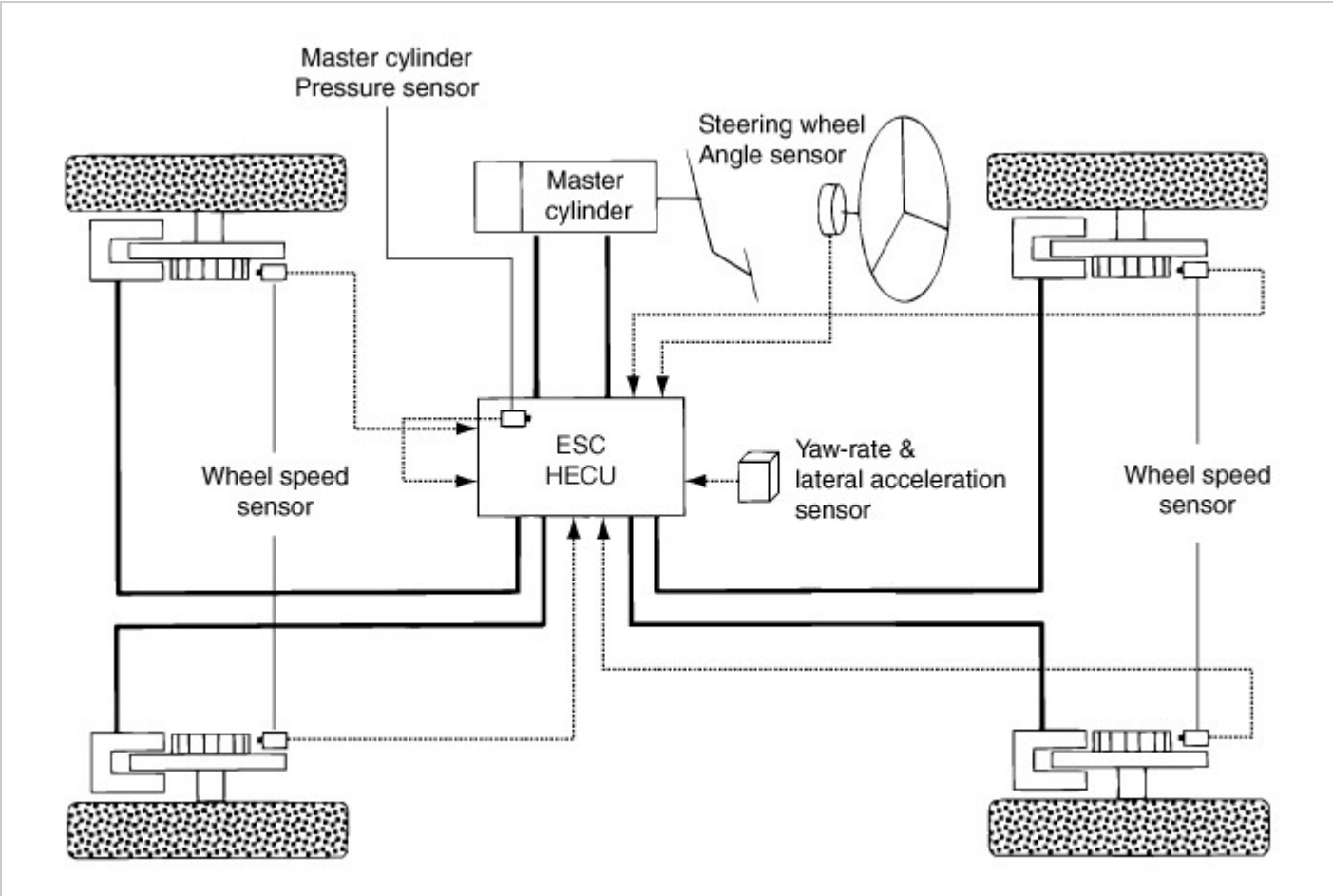

Variant Coding

Autonomous Emergency Braking (AEB) SystemAutonomous Emergency Braking (AEB) SystemAutonomous Emergency Braking (AEB) System calculations. Variant code programming should be performed whenever an HECU is replaced.

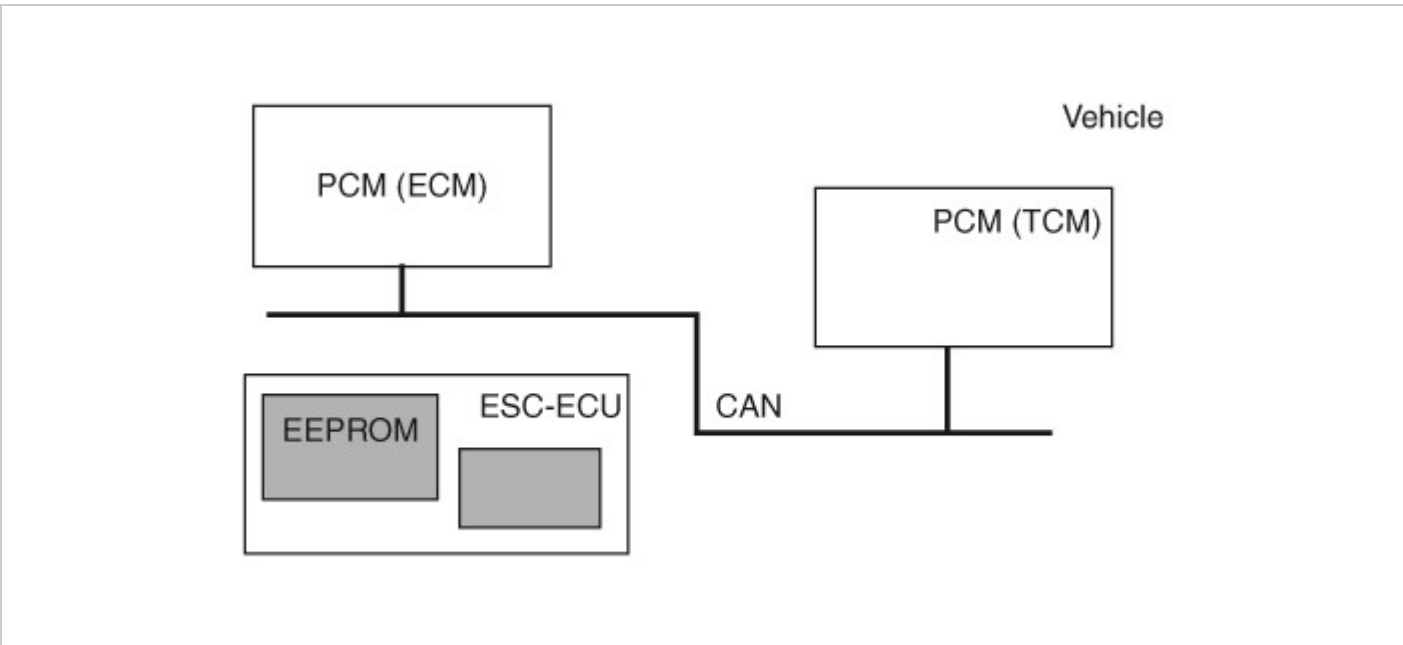

Input and Output Diagram

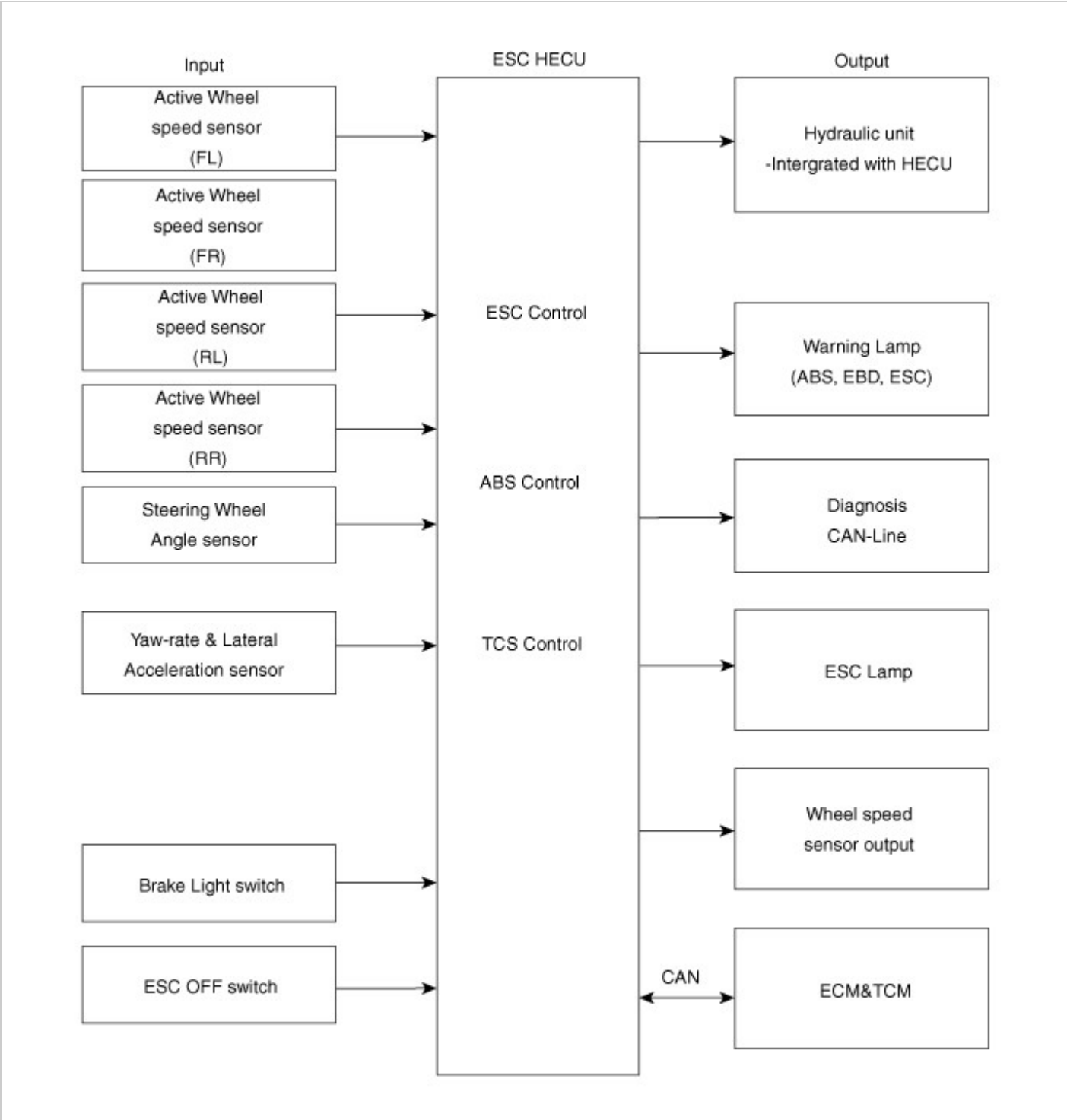

ESC Operation Mode

1. STEP 1
   The ESC analyzes the intention of the driver.

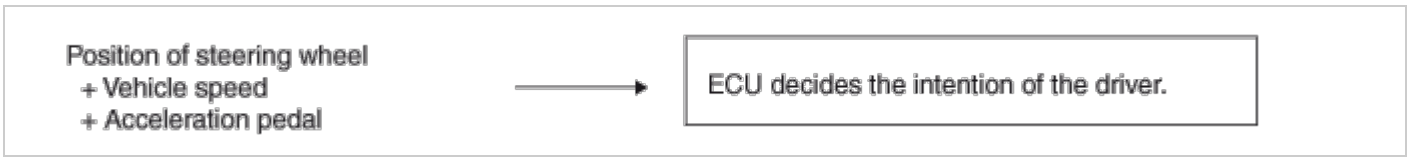

2. STEP 2
   It analyzes the movement of the ESC vehicle.

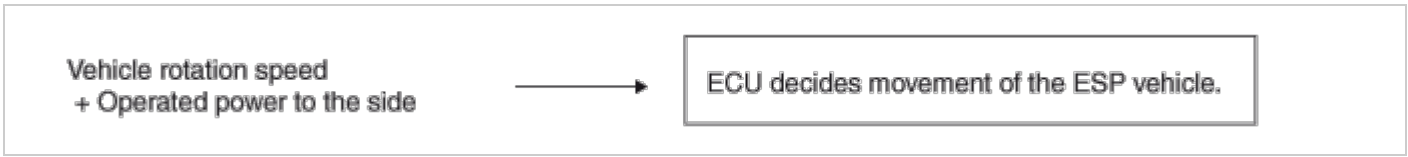

3. STEP 3
   The HECU calculates the required strategy, then actuates the appropriate valves and sents torque control requests via CAN to maintain vehicle stability.

ABS Warning Lamp

The active ABS warning lamp indicates the self-test and failure status of the ABS. The ABS warning lamp shall be on:

– During the initialization phase after IGN ON. (continuously 3 seconds).
– In the event of inhibition of ABS functions by failure.
– During diagnostic mode.
– When the ECU Connector is separated from ECU.

EBD/ Parking Brake Warning Lamp

The active EBD warning lamp indicates the self-test and failure status of the EBD. However, in case the Parking Brake Switch is turned on, the EBD warning lamp is always turned on regardless of EBD functions. The EBD warning lamp shall be on:

– During the initialization phase after IGN ON. (continuously 3 seconds).
– When the Parking Brake Switch is ON or brake fluid level is low.
– When the EBD function is out of order .
– During diagnostic mode.
– When the ECU Connector is separated from ECU.

ESC Function/ Warning Lamp (ESC System)

The ESC Function/Warning lamp indicates the self-test and failure status of the ESC.
The ESC Function/Warning lamp operates under the following conditions :

– During the initialization phase after IGN ON. (continuously 3 seconds).
– In the event of inhibition of ESC functions by failure.
– During dignostic mode.
– When the ESC control is operating. (Blinking - 2Hz)

ESC OFF Lamp (ESC System)

The ESC OFF lamp indicates the self-test and operating status of the ESC.
The ESC OFF lamp is turned on under the following conditions :

– During the initialization phase after IGN ON. (continuously 3 seconds).
– When driver turn off the ESC function by on/off switch.

ESC ON/ OFF Switch (ESC System)

The ESC On/Off Switch shall be used to toggle the ESC function between On/Off states based upon driver input.
The On/Off switch shall be a normally open, momentary contact switch.
Initial status of the ESC function is on and the switch is used to request an ESC status change.

Failure Diagnosis

1. In principle, ESP and TCS controls are prohibited in case of ABS failure.
2. When ESP or TCS fails, only the failed system control is prohibited.
3. However, when the solenoid valve relay should be turned off in case of ESP failure, refer to the ABS fail-safe.
4. Information on ABS fail-safe is identical to the fail-safe in systems where ESP is not installed.

Memory of Fail Code

1. It keeps the code as far as the backup lamp power is connected. (O)
2. It keeps the code as long as the HCU power is on. (X)

Failure Checkup

1. Initial checkup is performed immediately after the HECU power on.
2. Valve relay checkup is performed immediately after the IG2 ON.
3. It executes the checkup all the time while the IG2 power is on.
4. Initial checkup is made in the following cases.
   (1) When no failure is detected
   (2) When ABS and ESP are not in control.
   (3) Initial checkup is not made after ECU power on.
   (4) If the vehicle speed is over 5 mph(8 km/h) when the brake lamp switch is off.
   (5) When the vehicle speed is over 24.8 mph(40 km/h).

5. Though, it keeps on checkup even if the brake lamp switch is on.
6. When performing ABS or ESP control before the initial checkup, stop the initial checkup and wait for the HECU power input again.
7. Judge failure in the following cases.
   (1) When the power is normal.
   (2) From the point in which the vehicle speed reaches 4.9 mph(8 km/h) after HECU power on.

Countermeasures In Fail

1. Shut the system down and perform the following actions and wait for HECU power OFF.
2. Turn the valve relay off.
3. Do not perform any ABS/TCS/ESP functions until normal operating condition is restored.

Warning Lamp ON

1. ABS warning lamp turns on when ABS is malfunctioning.
2. ESP function/ warning lamp turns on when ESP is malfunctioning.

When power voltage and valve relay voltage are abnormal, input/output related failure judgment is not made.

Components

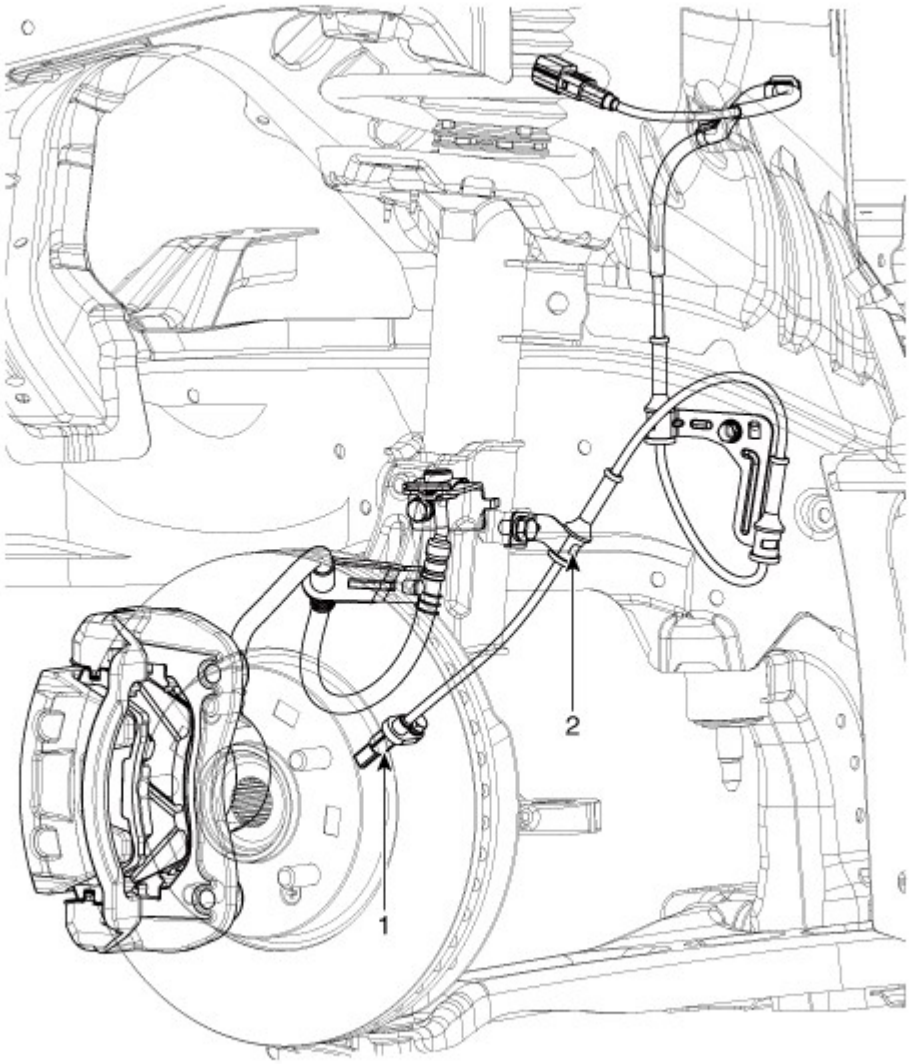

1. Front wheel speed sensor
2. Front wheel speed sensor cable

Removal

1. Loosen the wheel nuts slightly.
   Raise the vehicle, and make sure it is securely supported.
2. Remove the front wheel and tire (A) from the front hub.

   Tightening torque :
   107.9 - 127.5 N.m (11.0 - 13.0 kgf.m, 79.6 - 94.0 lb-ft)

NOTICE

- Be careful not to damage the hub bolts when removing the front wheel and tire (A).

3. Loosen the bolt and then remove the wheel speed sensor (A).

   Tightening torque :
   7.8 - 11.8 N.m (0.8 - 1.2 kgf.m, 5.8 - 8.7 lb-ft)

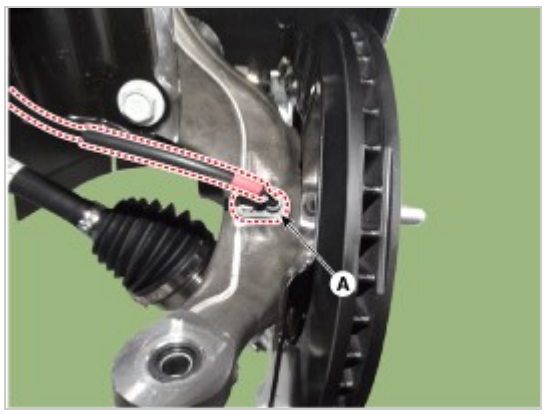

4. Loosen the mounting holt and then remove the brake hose from the strut assembly.

   Tightening torque :
   8.8 - 13.7 N.m (0.9 - 1.4 kgf.m, 6.5 - 10.1 lb-ft)

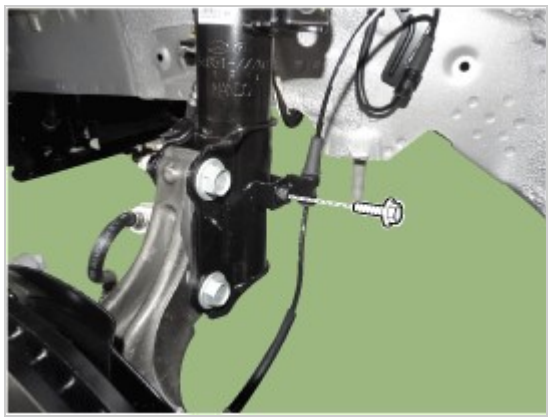

5. Remove the front wheel guard.
   (Refer to Body - "Front Wheel Guard")
6. Disconnect the connector after removing the cable bracket mouniting bolt and fixed clip.

   Tightening torque :
   8.8 - 13.7 N.m (0.9 - 1.4 kgf.m, 6.5 - 10.1 lb-ft)

7. Installation in the reverse of removal.

Inspection

1. Measure the output voltage between the terminal of the wheel speed sensor and the body ground.

> **NOTICE**
> - In order to protect the wheel speed sensor, when measuring output voltage, a 100Ω resister must be used as shown.

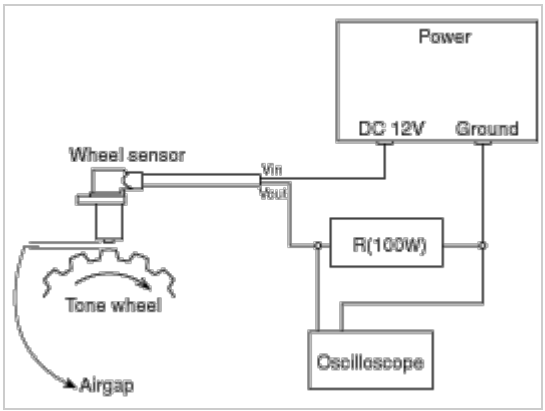

2. Compare the change of the output voltage of the wheel speed sensor to the normal change of the output voltage as shown below.

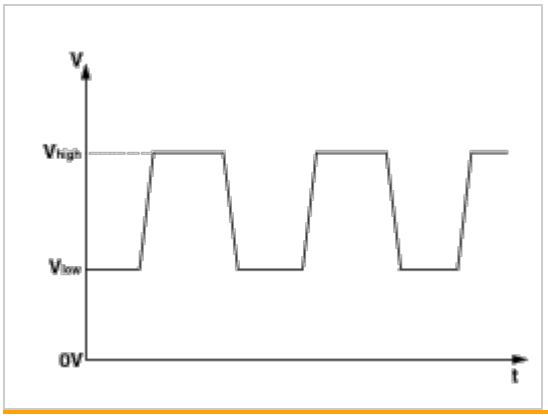

V_low : 0.59V - 0.84V
V_high : 1.18V - 1.68V
Frequency range : 1 - 2,500 Hz

Brake System

Components

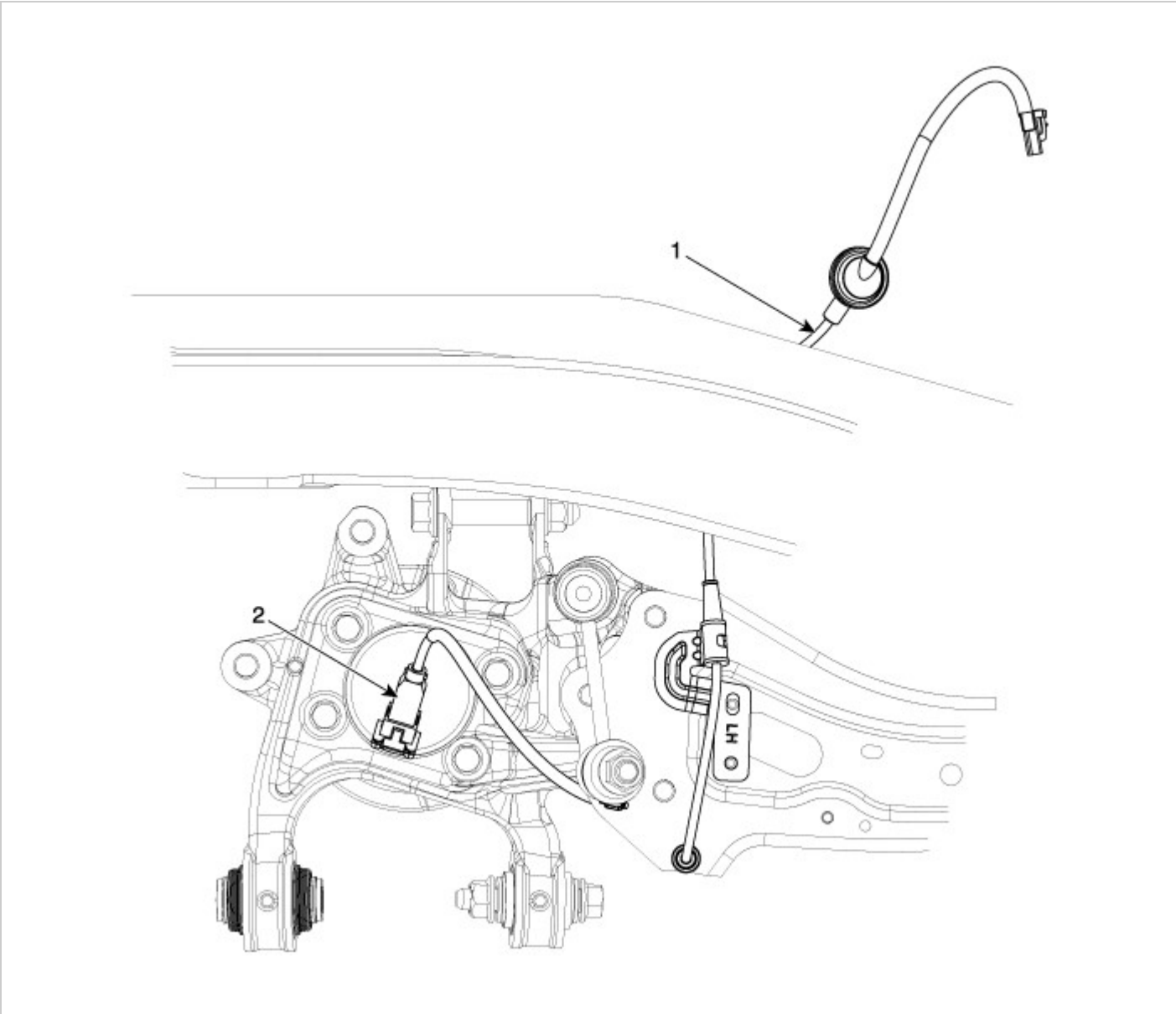

1. Rear wheel speed sensor cable
2. Rear wheel speed sensor connector

Brake System

Removal

1. Loosen the wheel nuts slightly.
   Raise the vehicle, and make sure it is securely supported.
2. Remove the front wheel and tire (A) from the rear hub.

   Tightening torque :
   107.9 - 127.5 N.m (11.0 - 13.0 kgf.m, 79.6 - 94.0 lb-ft)

NOTICE

- Be careful not to damage the hub bolts when removing the rear wheel and tire (A).

3. Disconnect the rear wheel speed sensor connector (A).

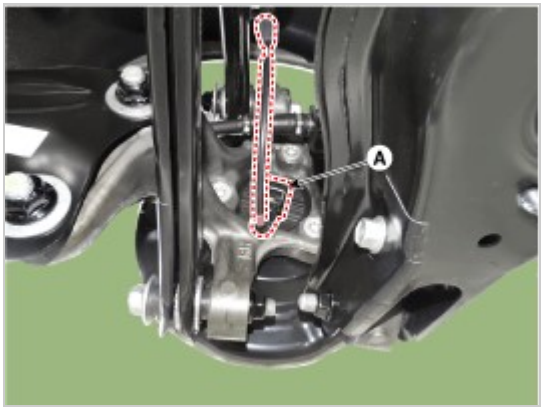

4. Loosen the mounting bolts (A) and then remove the hub bearing.

Tightening torque :
88.2 - 107.8 N.m (9.0 - 11.0 kgf.m, 65.0 - 79.5 lb-ft)

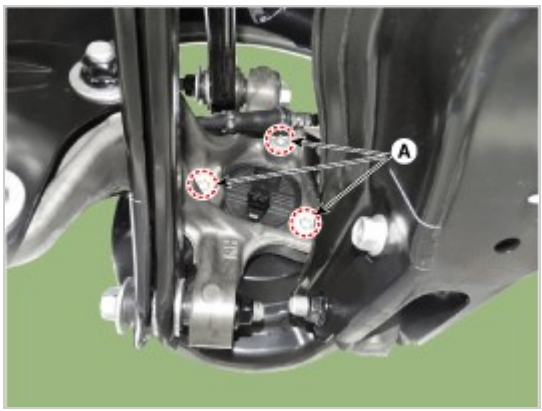

5. Installation in the reverse of removal.

Inspection

1. Measure the output voltage between the terminal of the wheel speed sensor and the body ground.

NOTICE

- In order to protect the wheel speed sensor, when measuring output voltage, a 100Ω resister must be used as shown.

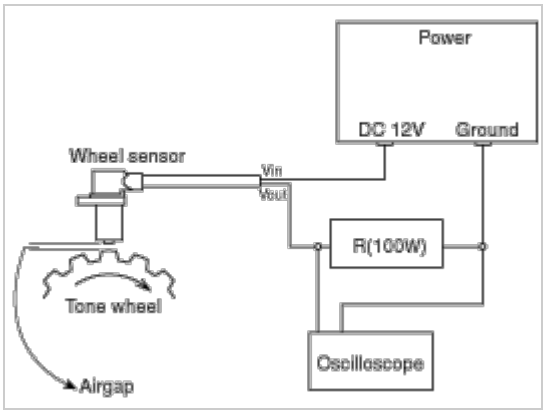

2. Compare the change of the output voltage of the wheel speed sensor to the normal change of the output voltage as shown below.

V_low : 0.59V - 0.84V
V_high : 1.18V - 1.68V
Frequency range : 1 - 2,500 Hz

Brake System

Components

1. ESP OFF Switch

Brake System

Description

1. The ESP OFF switch is for the user to turn off the ESP system.
2. The ESP OFF lamp is on when ESP OFF switch is engaged.

Brake System

Removal

1. Turn ignition switch OFF and disconnect the negative (-) battery cable.
2. Remove the crash pad lower cover.
   (Refer to Body -"Crash Pad")
3. Disconnect the crash pad side switch assembly.

4. Check the continuity between the switch terminals as the ESP OFF switch is engaged.

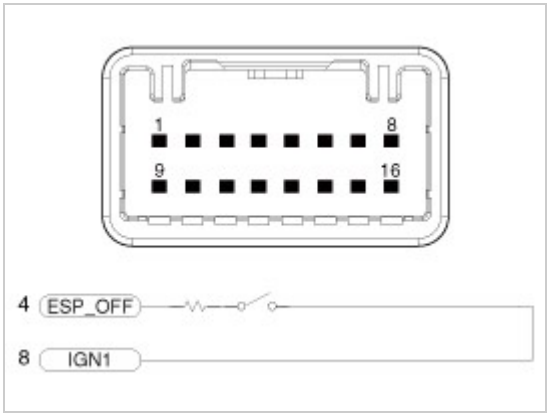

Description

Introduction of Quick Brake Warning System (ESS)

In case of quick brake by driver, the brake lamp or turn signal is blinked to warn against the vehicle at rear.

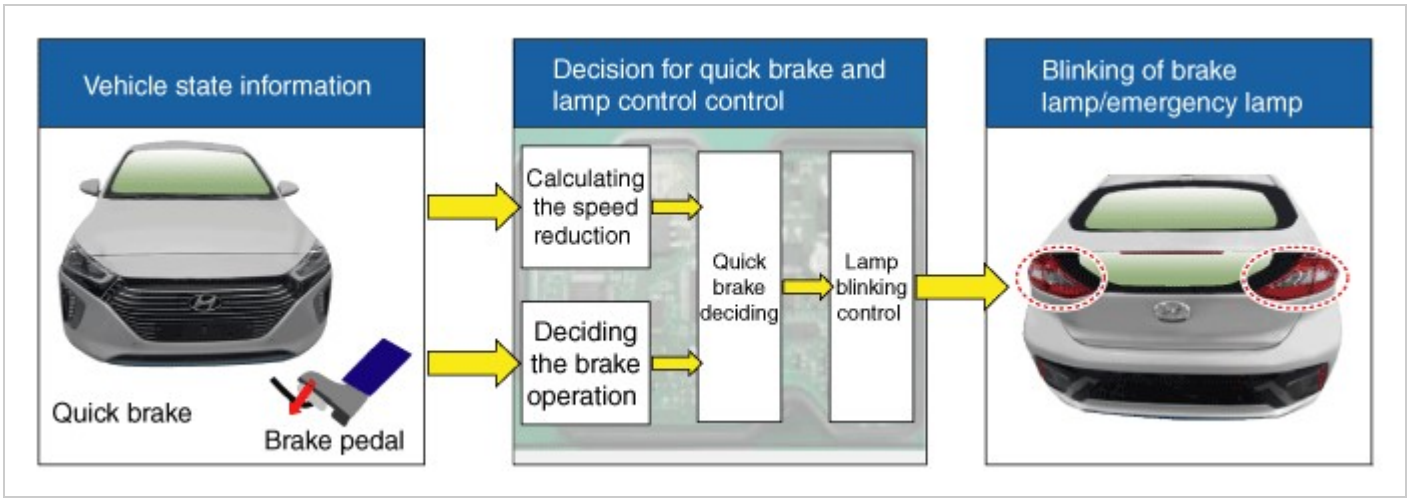

1. Basic function (Blinking the brake lamp/emergency lamp)
   – Operation condition : In case of quick brake or operation of ABS above in a certain speed
   – Releasing condition : In case of stopping the quick brake or releasing the ABS operation
2. Additional function (Blinking the turn signal)
   – Operation condition : In case of quick brake in low speed
   – Releasing condition : Releasing at the start of driving

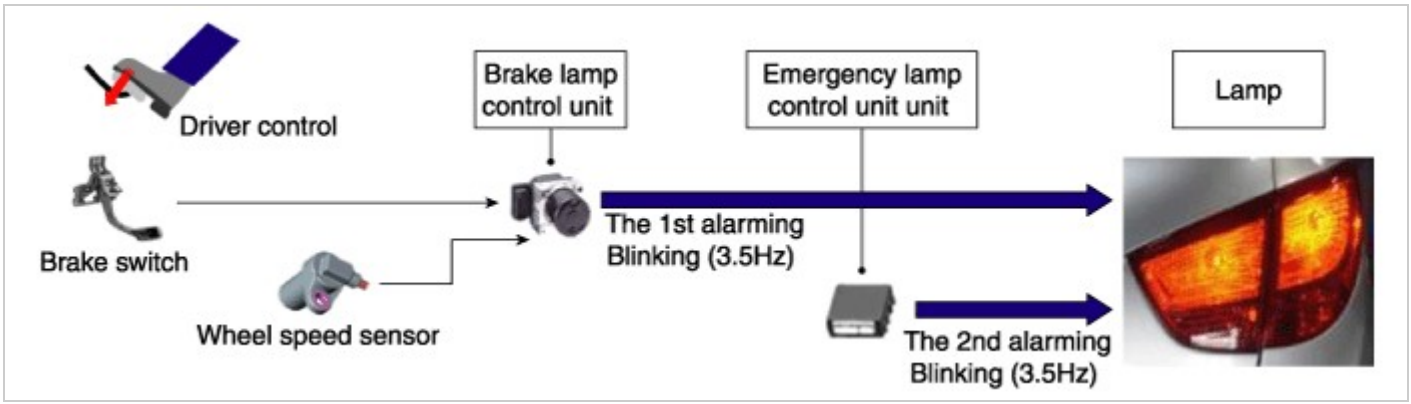

System Configuration

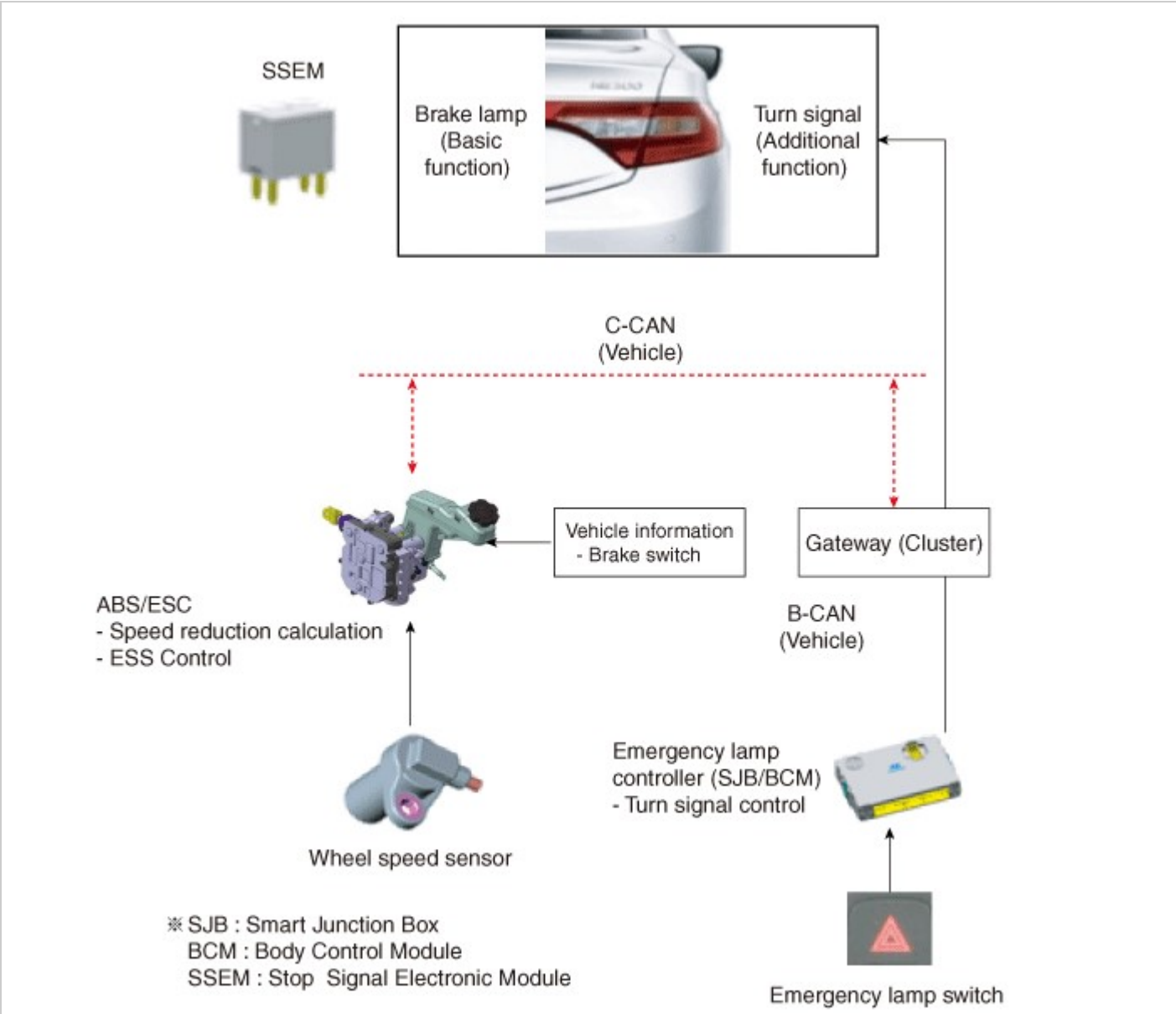

ESS Circuit Diagram

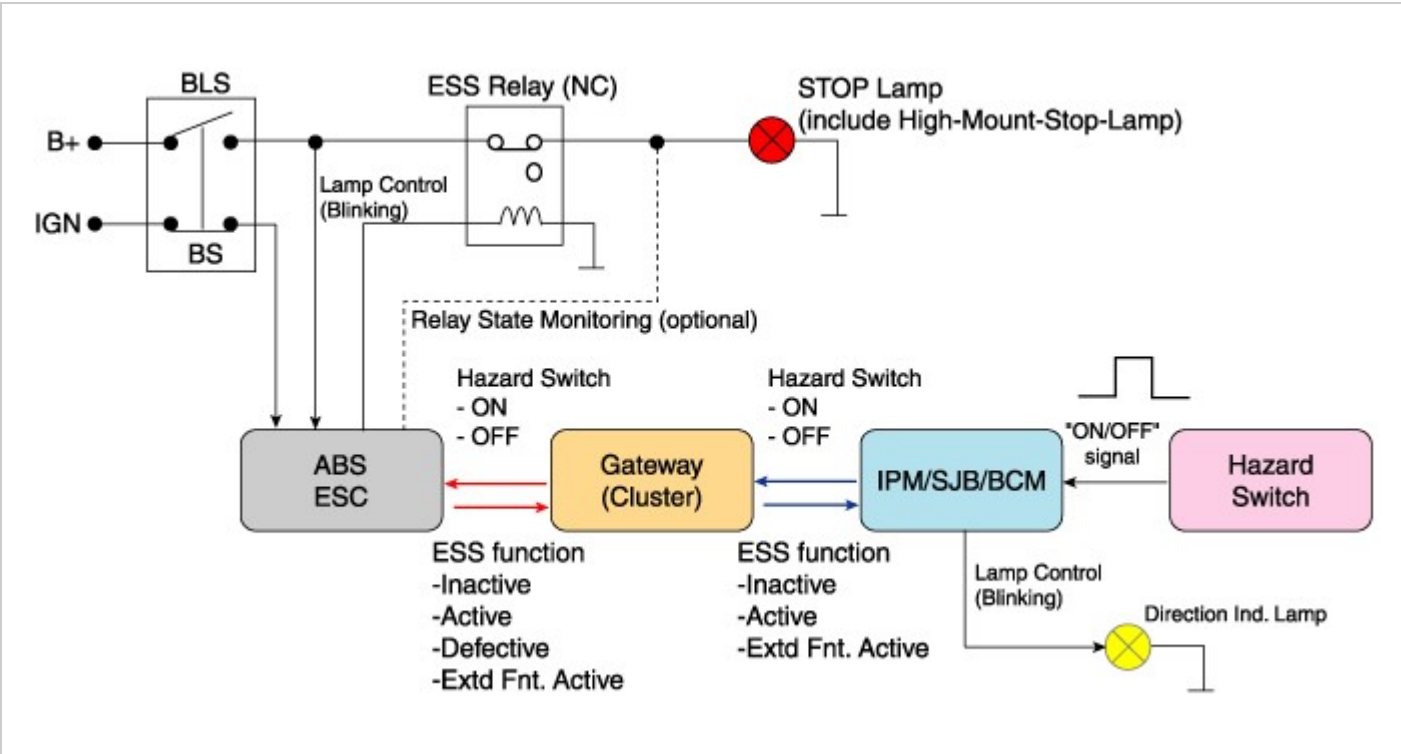

Components

The following is the configuration of the AEB system.

– Detection device (radar and camera) that can recognize potential obstacles in the front.
– Human-Machine Interface (HMI) to warn driver or change settings.
– Braking system to automatically brake the car

AEB, contrary to SCC (Smart Cruise Control), has to work on a stationary car so the system uses the Fusion Target system to combine radar with camera.

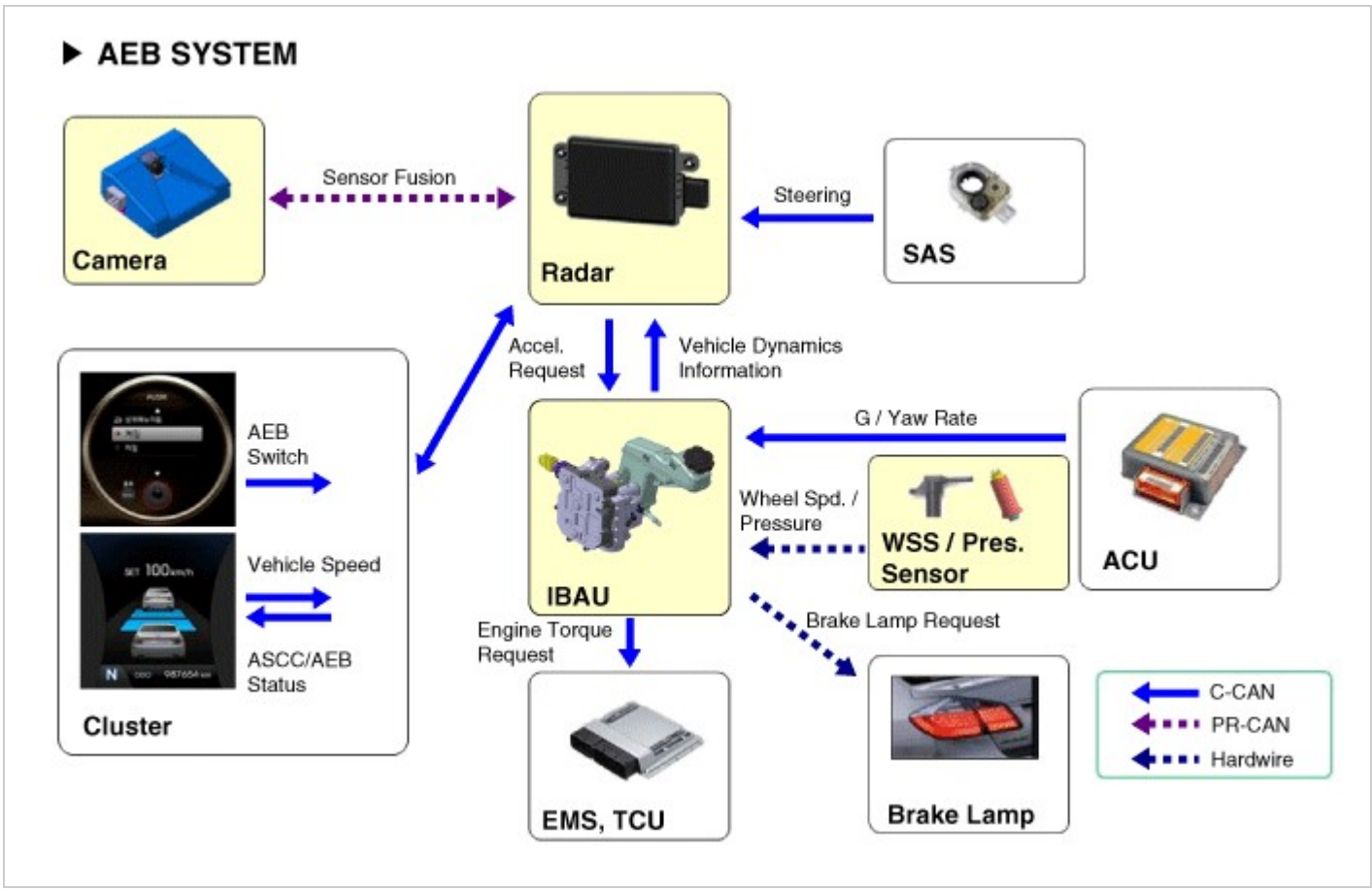

Brake System

Description

– AEB system is designed to help avoid a potential collision or reduce its impact when drivers applies inadequate, delayed or no brakes at all to avoid a collision.
– The system detects the risk factors on the road by using the frontal impact sensor and warn the driver and activate the emergency brake to prevent collision or reduce collision speed.

The following is the system control process

1. Detect preceding vehicles (pedestrians) and analyze the data (CAN comm.) by using the radar sensor of the Smart Cruise Control System (SCC) and the camera sensor of Lane Departure Warning System (LDWS).
2. Confirm the object to be protected by AEB system (vehicles and pedestrians) by using the analyzed data.
3. Calculate the speed reduction depending on the speed, distance, existence or nonexistence of preceding vehicle.
4. Report the "required speed reduction" to Vehicle Dynamics Control (VDC) (CAN Comm.)
5. VDC performs automatic control after calculating the required torque to achieve "required speed reduction" (CAN Comm.).

Operation

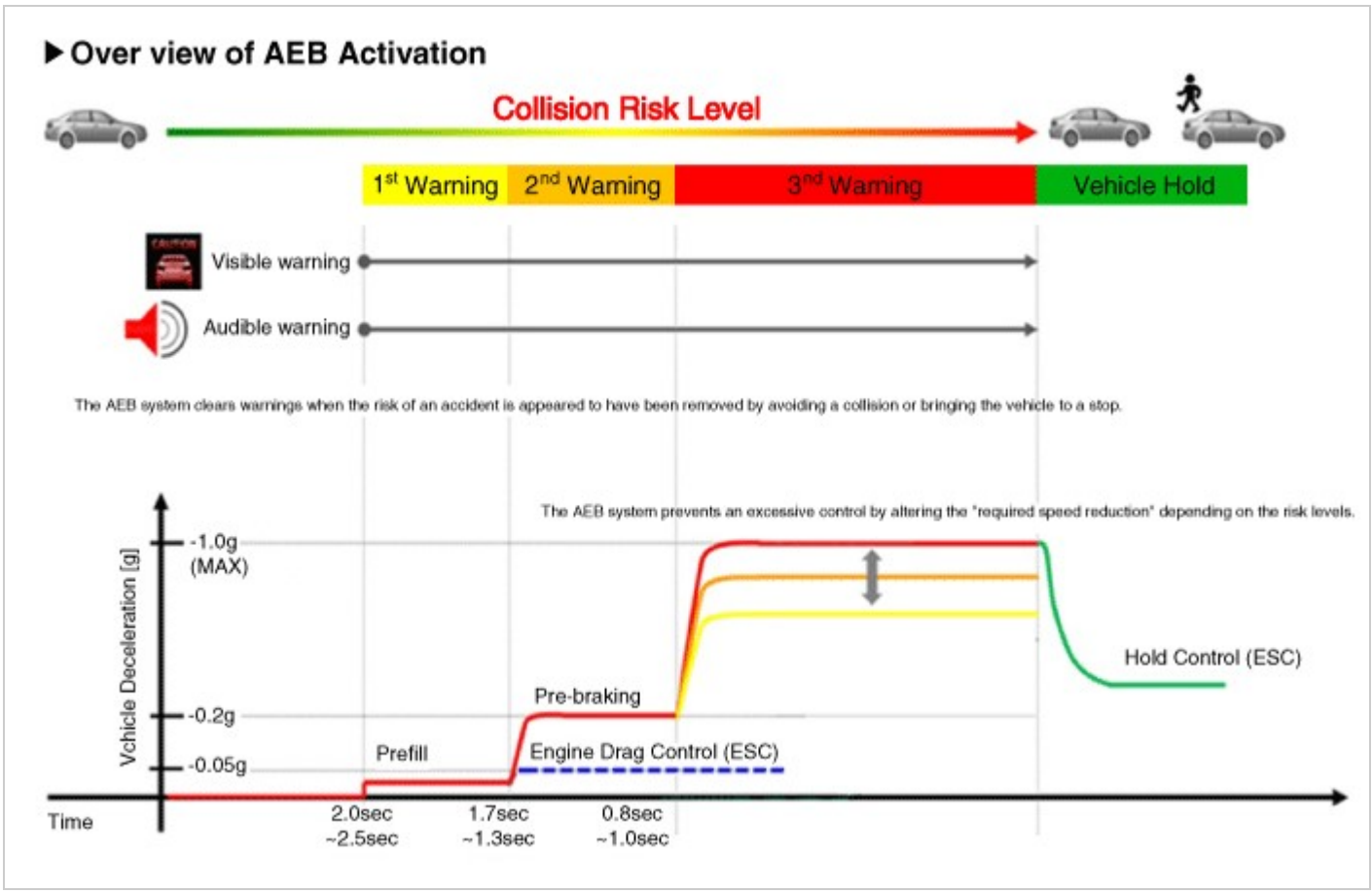

※ The time indicated will be changed according to vehicle speeds.

- Step 1 : Issue a visual (display) and vocal alarm when a danger is detected.
- Step 2 : Reduce engine torque and activates AEB when there is a high chance of collision.
- Step 3 : Activate emergency brake when a collision is imminent.
- After stopping the vehicle : Maintain the braking control for a certain time and then release it.

Information

- Braking power is adjusted depending on the risk levels of collision, but it is released immediately when it detects the driver"s action to avoid a collision.

1) When it exceeded the maximum operation speed.
2) When it detected driver"s action to avoid a collision such as sudden steering changes.
3) When the shift lever is in R or P
4) When you pressed the accelerator pedal half way.

CAUTION

1) When you drive at 80km/h or faster, the system does not go to step 3 of emergency braking.
– Full auto braking is not available.
2) While driving at 80km/h or slower on a straight or slightly curved road, the system performs three steps after issuing a warning.
– But a collision may occur at 30km/h or faster depending on the road conditions.
3) While driving at 80km/h or slower on a straight or slightly curved road, after a visual and vocal warning, AEB is activated to reduce the vehicle speed.
4) At 80km/h or faster, it"s impossible to avoid a collision. Offset should be less than 50%.
5) AEB does not work on the vehicles backing up or resisting.
6) At 70km/h or faster, it does not respond to pedestrians.

Information

Offset : Rate of non-overlapping on the line between the front driving car and my car

1) Offset 0% :

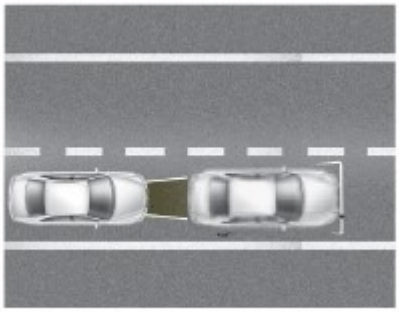

2) Offset 100% :

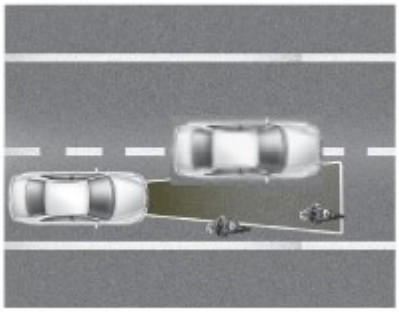

Schematic Diagram

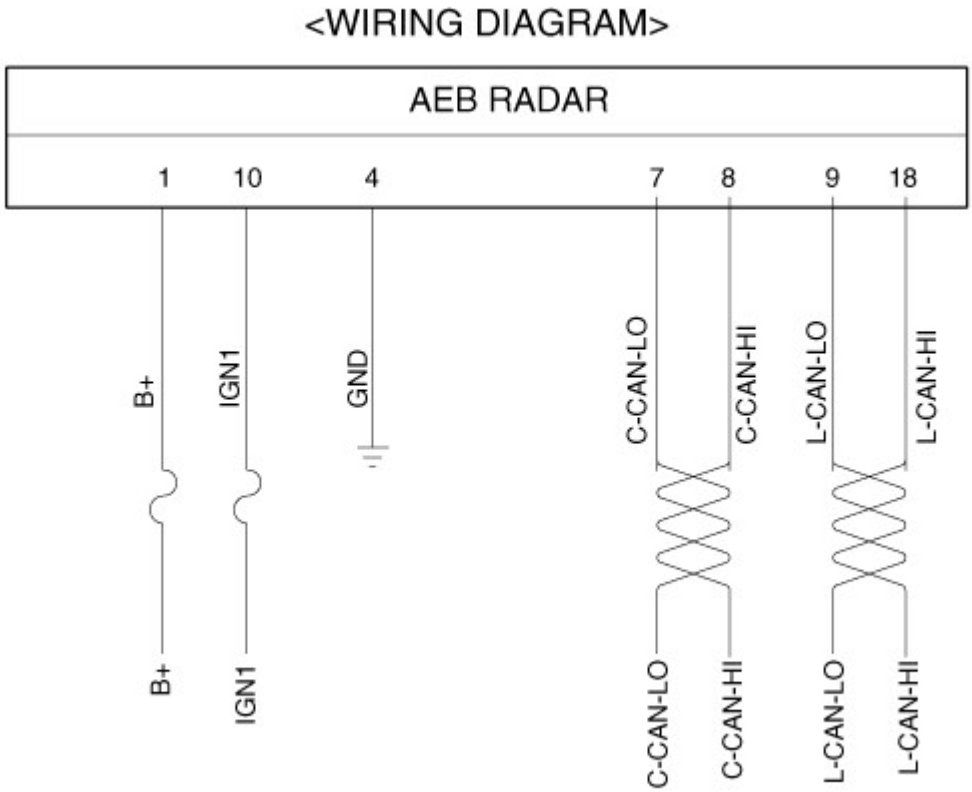

Terminal Function

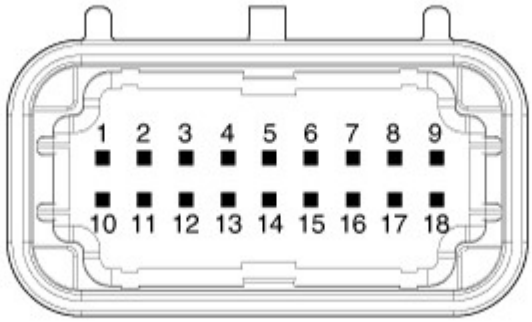

No	Terminal function
1	B+
2	NC
3	NC
4	GND
5	NC
6	NC
7	C-CAN_Low
8	C-CAN_High
9	L-CAN_Low
10	IGN1
11	NC
12	NC
13	NC
14	NC
15	NC
16	NC
17	NC
18	L-CAN_High

Inspection

AEB function ON / OFF switch was included to USM (User Setting Menu) and the state of the factory is ON.
When the IGN On, maintain ON condition by default. And does not reflect the driver settings when next IGN On.
If turned the ESC function Off, the AEB function is turned off.

– The ON/OFF for AEB is included in the USM (User Setting Menu) and the default is ON.
– While IGN is On, it stays at ON, however, the driver"s settings do not last next time when IGN is newly On.
– When VDC is OFF, AEB is also turned OFF.

Removal

AEB Ladar

1. Turn the ignition switch off and disconnect the battery (-) cable.
2. Remove the front bumper cover.
   (Refer to Body - "Front Bumper")
3. Remove AEB radar.
   (Refer to Engine Electrical System - "Smart Cruise Control System")

LDWS Camera

AEB, contrary to SCC (Smart Cruise Control) has to work on a stationary car so the system uses the Fusion Target system to combine radar and camera.

1. Disconnect the battery (-) cable.
2. Remove the camera.
   (Refer to Body Electrical System - "Lane Departure Warning System (LDWS)")

Installation

AEB Ladar

1. Installation is the reverse of removal.
2. Perform the AEB (SCC) radar alignment.
   (Refer to Engine Electrical System - "Smart Cruise Control System")

LDWS Camera

1. Installation in the reverse of removal.
2. Perform Service Point Target Auto Calibration (SPTAC).
   (Refer to Body Electrical System - "Lane Departure Warning System (LDWS)")