Safety Precaution

Precautions to take before servicing high voltage system

DANGER

- Since hybrid vehicles contain a high voltage battery, if the high voltage system or vehicles are handled incorrectly, this might lead to a serious accidents like electric shock and electric leakage.

WARNING

- Be sure to shut off the high voltage by removing the safety plug before performing inspection or repairing the high voltage system.
  (Refer to "High Voltage Shut-off Procedures")
- The responsible worker keeps the removed safety plug to prevent the plug from being connected by mistake.
- Do not keep any metal objects (watch, ring etc.) while working on the high voltage system, which it can cause serious accidents like electric shock.
- Before beginning work on the high voltage system, the worker should wear personal protective equipment to prevent safety accidents.
  (Refer to "Personal Protective Equipment")
- Never allow workers who are not wear personal protective equipment to touch the high voltage system. High voltage components should be covered with an insulation sheet to prevent safety accidents.
- Use insulation tools when working on the high voltage system.
- Put the removed high voltage components on the insulation mat.

Information

- All the high voltage wiring and connectors are orange.
- A caution label for high voltage is attached to the high voltage components.
- High voltage components :
  High Voltage Battery Pack Assembly, Power Relay Assembly (PRA), BMS ECU, Hybrid Power Control Unit (HPCU), Hybrid Drive Motor, HSG, Electric A/C Compressor, Low DC/DC Converter (LDC), Power Cable, Electric Compressor etc.

CAUTION

- Inform of danger of high voltage by putting the "high voltage caution" on the vehicle as image below.

SAMPLE

DANGER

High Voltage : Do not touch during operation.

Person in charge : _____

Copy this page and put it after folding on the roof of the vehicle in service.

DANGER

High Voltage : Do not touch during operation.

Person in charge : _____

Personal Protective Equipment

Name	Illustration	Description
Insulation glove		Used when inspecting or working on the high voltage components [Insulation performance : 1000V / 300A or above]
Insulation shoes		Used when inspecting or working on the high voltage components

Insulation clothes		Used in the case below • During Removal & installation or inspection of the high voltage battery terminals or wiring, which spark might happen. • During working on the high voltage battery pack assembly.
Insulation helmet	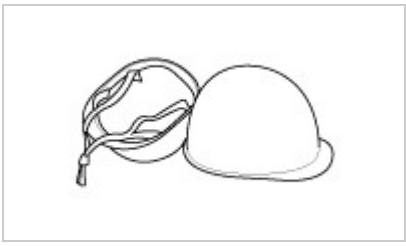	
Safety glasses		
Face shield		
Insulation mat	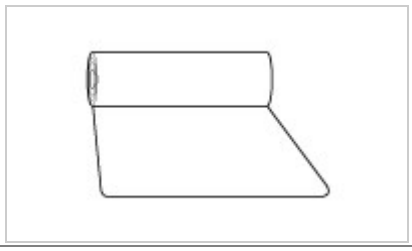	Putting the removed high voltage components on the insulation mat to prevent safety accidents.
Insulation sheet	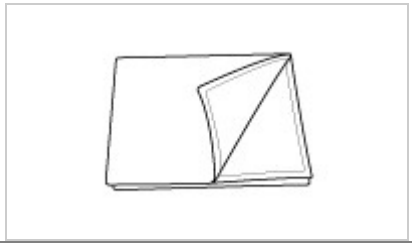	Covering the high voltage components with insulation sheet to prevent people who don’t wear the personal protective equipment from safety accidents.

Precautions to take when handling power cable

- Immediately insulate the high voltage terminal after reconnecting the terminal (use insulation tape).
- Tighten the high voltage terminal screw to spec torque.
- Be careful that (+) and (-) terminals do not come in contact when connecting or disconnecting power cable and busbar.

Precautions to take when handling high voltage battery

- When transporting high voltage battery, be sure to keep it flat and leveled. Failure to do so may decrease the battery performance and/or its life-span.
- High voltage battery"s performance may decrease if it is exposed to high temperature for a lengthy period. As a result, heat-treatment after painting must not exceed 70°C/ 30 minutes, or 80°C/ 20 minutes.

Precautions in case of fire on high voltage battery system

- If the fire occurs indoor, ventilate the area to let out hydrogen gas.
- ACB fire extinguisher is recommended for putting out the fire. (water may also be used).

Precautions in case of high voltage battery gas or electrolyte leakage

-

Turn OFF the Start button. Keep the Smart Key at least 2 meters away from the vehicle to prevent unintended engine start.

- Gas is hydrogen and alkaline vapor. If the leakage is indoor, ventilate the area immediately and evacuate to a safe location.
- If the leaked liquid comes in contact with skin, immediately neutralize the affected area with boric acid solution, then clean with tap water or saline solution.
- If the leaked vapor or liquid gets in the eye, immediately clean the affected eye with water then get medical attention.
- If the gas leakage is caused by high temperature, then do NOT use the battery until the high voltage battery fully cools down to room temperature.

Precautions when handling the vehicle after an accident

- Be sure to wear insulated gloves (or rubber gloves), protective goggles, insulated suite, and insulated boots.
- Do NOT touch bare cable under any condition.
  (Refer to "Precautions when handling power cable")
- In case of vehicle fire, put out the fire with ABC extinguisher. Do NOT use water (usage of large volume of water is okay, but small volume can worsen the situation).
- If more than half of the vehicle is submerged, then do NOT go near the Safety Switch or other high voltage related components. If such a component must be accessed, then move the vehicle to the safe location first before handling the component.
- Gas is hydrogen and alkaline vapor. If the leakage is indoor, ventilate the area immediately and evacuate to a safe location.
- If the leaked liquid comes in contact with skin, immediately neutralize the affected area with boric acid solution, then clean with tap water or saline solution.
- Refer to "High voltage cut-off procedure" if the high voltage needs to be cut off.

Preparations when servicing the accident vehicle

- Be sure to wear insulated gloves (or rubber gloves), protective goggles, insulated suite, and insulated boots.
- Boric Acid Power or Solution
- ABC Extinguisher
- Towel for cleaning electrolyte
- Vinyl tape (for insulating terminal)
- Mega ohm tester (for checking high voltage)

Precautions in case HEV is left unattended for a lengthy period

- Turn OFF the Start button. Keep the Smart Key at least 2 meters away from the vehicle to prevent unintended engine start.
- We recommend that HEV is driven at least 1 time for over 30 minutes every 2 months to protect and manage the high voltage battery (inquire at relevant team in HMC).
- When inspecting or exchanging the auxiliary battery, check high voltage battery SOC reset related problems.

Hybrid Vehicle Refrigerant Recovery / Charging Precautions

- Since the electric compressor uses high-voltage, you should use POE oil which have high Volumetric Resistivity.
- Do not use the same A/C recovery / charging station as conventional belt-driven compressors.

WARNING

- If the POE oil of the system gets mixed with PAG oil, then dielectric breakdown due to decreased volumetric Resistivity can occur and inoperative A/C compressor may result, A/C compressor may not work

High Voltage Shut-off Procedures

WARNING

- Be sure to read and follow the "General Safety Information and Caution" before doing any work related with the high voltage system. Failure to follow the safety instructions may result in serious electrical injuries.
- Be sure to read and follow the "High Voltage Shut-off Procedures" before doing any work related with the high voltage system. Failure to follow the safety instructions may result in serious electrical injuries.

Information

- High voltage components :
  High Voltage Battery Pack Assembly, Power Relay Assembly (PRA), BMS ECU, Hybrid Power Control Unit (HPCU), Hybrid Drive Motor, HSG, Electric A/C Compressor, Low DC/DC Converter (LDC), Power Cable, Electric Compressor etc.

1. Turn the ignition switch OFF and disconnect the auxiliary 12V battery negative (-) terminal.

2. Remove the safety plug cover (A).

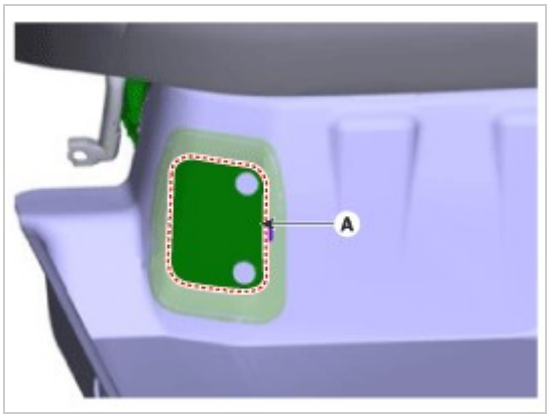

3. Unfasten the hook (A) and then remove the safety plug (C) by pulling the lever (B) to the direction of arrow.

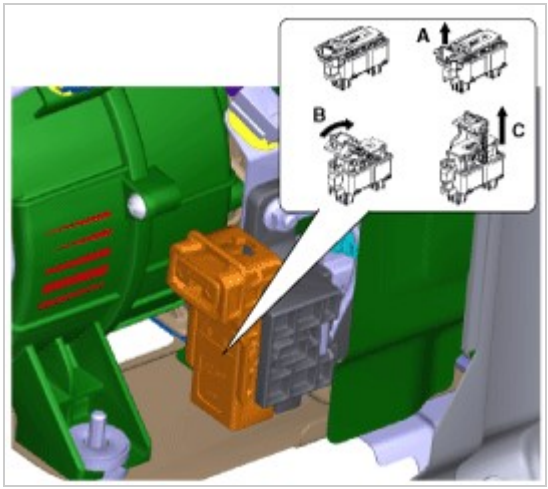

4. Wait for more than 5 minutes so that the capacitor in the high voltage system can be fully discharged.
5. Measure the voltage between the inverter terminals to check that the capacitor in the inverter is discharged completely.
   (1) Remove air cleaner assembly and air duct.
   (Refer to Engine Mechanical System - "Air Cleaner")
   (2) Disconnect the inverter power cable (A).

Information

- Disconnect the inverter power cable as the procedures below.

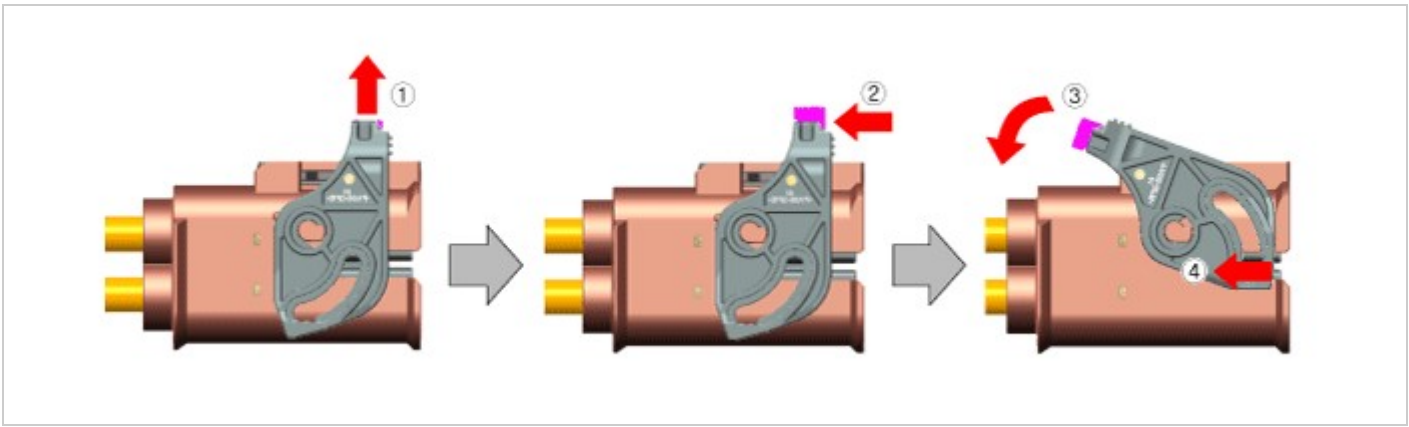

(3) Measure the voltage between the inverter (+) terminal and the inverter (-) terminal.

Less than 30V : High voltage circuit properly shut
More than 30V : Fault on high voltage circuit

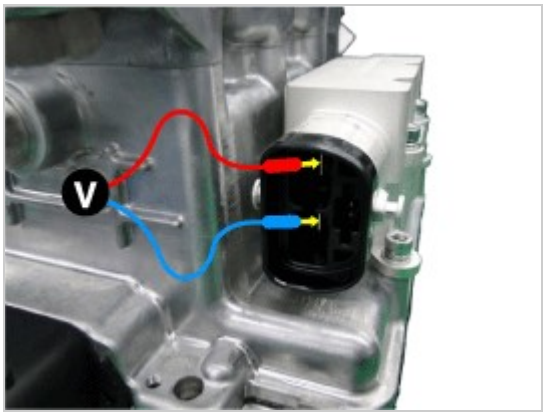

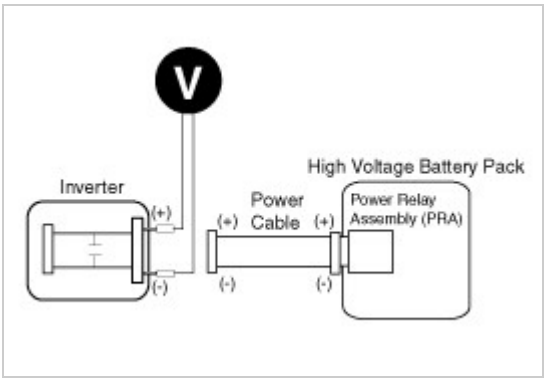

WARNING

- If measured more than 30V, check if the safety plug is removed completely.If measured more than 30V despite the safety plug is removed, there can be serious problems on the high voltage circuit. In this case, check DTC and never touch the high voltage system circuits.

Steering System

Specifications

Item		Specification
Type		Electric Power Steering System
Steering gear	Type	Rack & Pinion
	Rack stroke	154±1 mm (6.07±0.04 in)
Steering angle (Max.)	Inner	39.4°+0.5° / -1.5°
	Outer	32.6°

Tightening Torques

Item		Tightening torque (kgf.m)		
		N.m	kgf.m	lb-ft
Hub nuts		107.9 - 127.5	11.0 - 13.0	79.6 - 94.0
Steering wheel lock nut		44.1 - 49.0	4.5 - 5.0	32.5 - 36.2
Steering column mounting	Bolt	53.9 - 58.8	5.5 - 6.0	39.8 - 43.4
	Nuts	25.0 - 29.4	2.5 - 3.0	14.5 - 21.7
Steering column to Universal joint		49.0 - 58.8	5.0 - 6.0	39.8 - 43.4
Bolt connecting universal joint to pinion		32.4 - 38.3	3.3 - 3.8	23.9 - 27.5
Tie rod end castle nut		78.5 - 98.1	8.0 - 10.0	57.9 - 72.3
Lower arm to front axle		78.5 - 98.1	8.0 - 10.0	57.9 - 72.3
Steering gear box to sub frame		88.3 - 107.9	9.0 - 11.0	65.1 - 79.6
Stabilizer link nut		98.1 - 117.7	10.0 - 12.0	72.3 - 86.8
Sub frame mounting bolts & nuts		156.9 - 176.5	16.0 - 18.0	115.7 - 130.2

Steering System

Troubleshooting

Trouble Symptom	Cause of the symptom	Remedy
Excessive play in steering	Loose U-joint bolt	Retighten or replace as necessary
	Loose yoke plug	Retighten
	Loose steering gear mounting bolts	Retighten
	Loose or worn tie rod end	Retighten or replace as necessary
Steering wheel does not return to its original position	Excessive turning resistance of tie rod end	Replace
	Yoke plug excessively tight	Adjust
	Tie rod and/or ball joint cannot turn smoothly	Replace
	Loose mounting of gear box at the subframe	Retighten
	Worn steering shaft joint and/or body grommet	Correct or replace
	Distorted rack	Replace
Rattling or chucking noise in the rack and pinion	Loose steering gear box mounting	Reposition
	Loose tie rod end and/or ball joint	Repace
	Worn tie rod and/or ball joint	Repace
	Loose yoke plug	Replace

Inspection

Steering Wheel Play Inspection

1. Turn the steering wheel so that the front wheels can face straight ahead.
2. Measure the distance the steering wheel can be turned without moving the front wheels.

   Standard value :30 mm (1.18 in.) or less

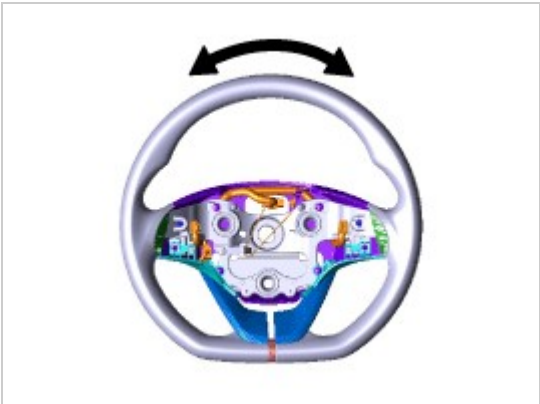

3. If the play exceeds standard value, inspect the steering column, shaft, and linkages.

Checking stationary steering effort

1. Position the vehicle on a level surface and place the steering wheel in the straight ahead position.
2. Attach a spring scale to the steering wheel. With the engine speed 600 ±100 rpm, pull the scale and read it as soon as the tires begin to turn.

   Standard value :3.0 kgf or less

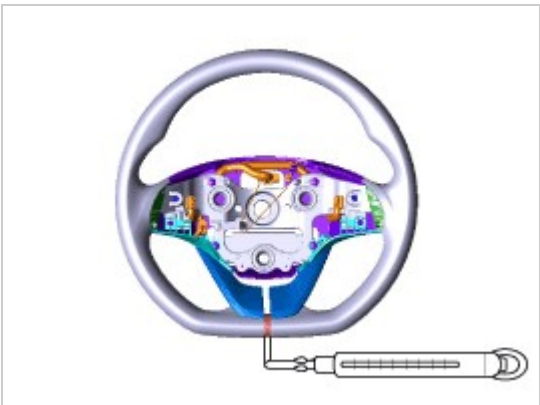

3. If the measured value exceeds standard value, inspect the power steering gear box and ESP system

Components

1. Lower cover
2. Wiring
3. Steering wheel
4. Remote contorl switch
5. Upper cover
6. Driver airbag module(DAB)

Removal

1. Disconnect the battery negative cable from the battery and then wait for at least 30 seconds.
2. Turn the steering wheel so that the front wheels are placed in the straight ahead position.
3. Remove the driver airbag module (DAB).

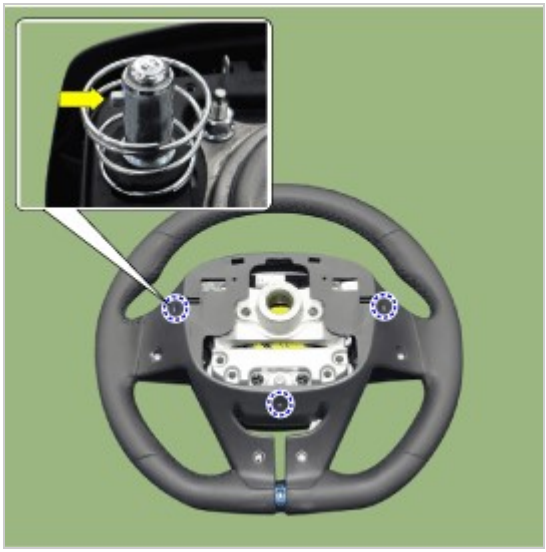

NOTICE

- Insert the end of the flat tool along the guide hole. (Φ5mm allen wrench recommend.)
- After inserting the tool, lightly press it. Can be easily remove the air bag module.

4. Disconnect the airbag module connector (A) and horn connector (B).

NOTICE

- The removed airbag module should be stored in a clean, dry place with the pad cover facing up.

5. Disconnect the connector (A).

6. Remove the steering wheel by loosening the lock bolt.

NOTICE

- Do not reuse the steering lock bolt.
- When assembling, match the gear teeth as the illustration below.

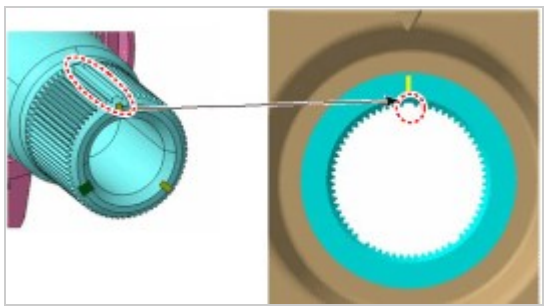

7. To install, reverse the removal procedure.

Disassembly

1. Loosen the screw and then remove the lower cover.

2. Disconnect the remote control switch connector.

3. Disconnect the heated steering wheel pad connertor (A).

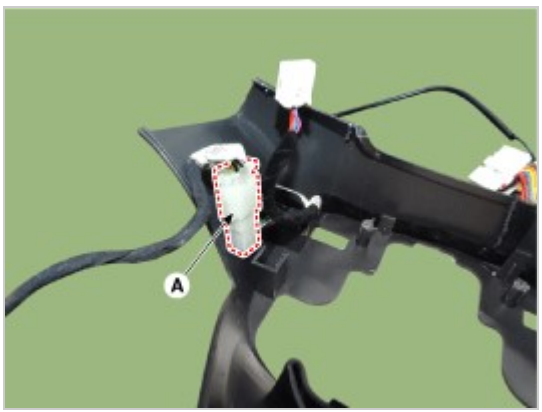

4. Remove the wiring from the lower cover.

5. Separate the remote control switch by loosening the screw

6. loosen the screw and then remove the steering wheel upper cover.

7. To reassembly, reverse the disassembly procedure.

Steering System

Components location

Heated steering wheel control module (Body control moduel (BCM))

1. Body contorl module

Heated steering wheel switch

1. Heated steering switch

Steering System

Description

For the convenience of drivers during the winter, exothermic paint is applied to the surface of the steering wheel to generate heat when it is gripped.

Heated control unit (Body control module (BCM))

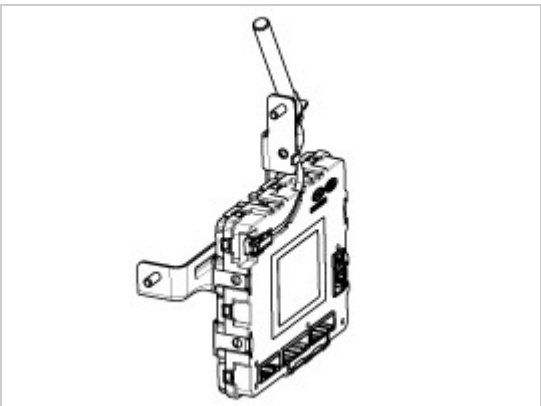

Heated pad :

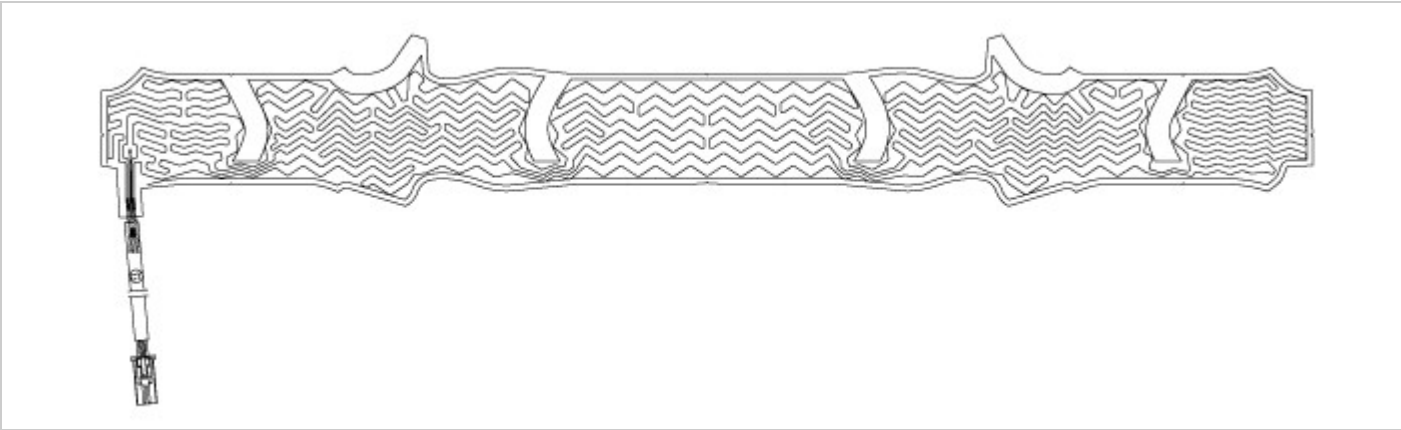

Steering System

Specifications

Item	Specification
Voltage	13.5 V
Heated pad resistance	1.8 Ω ± 0.2 Ω
NTC resistance	10.0 kΩ ± 10% (25°C)

Steering System

System Circuit Diagram

Body control Module

Heated steering switch

Heated steering pad

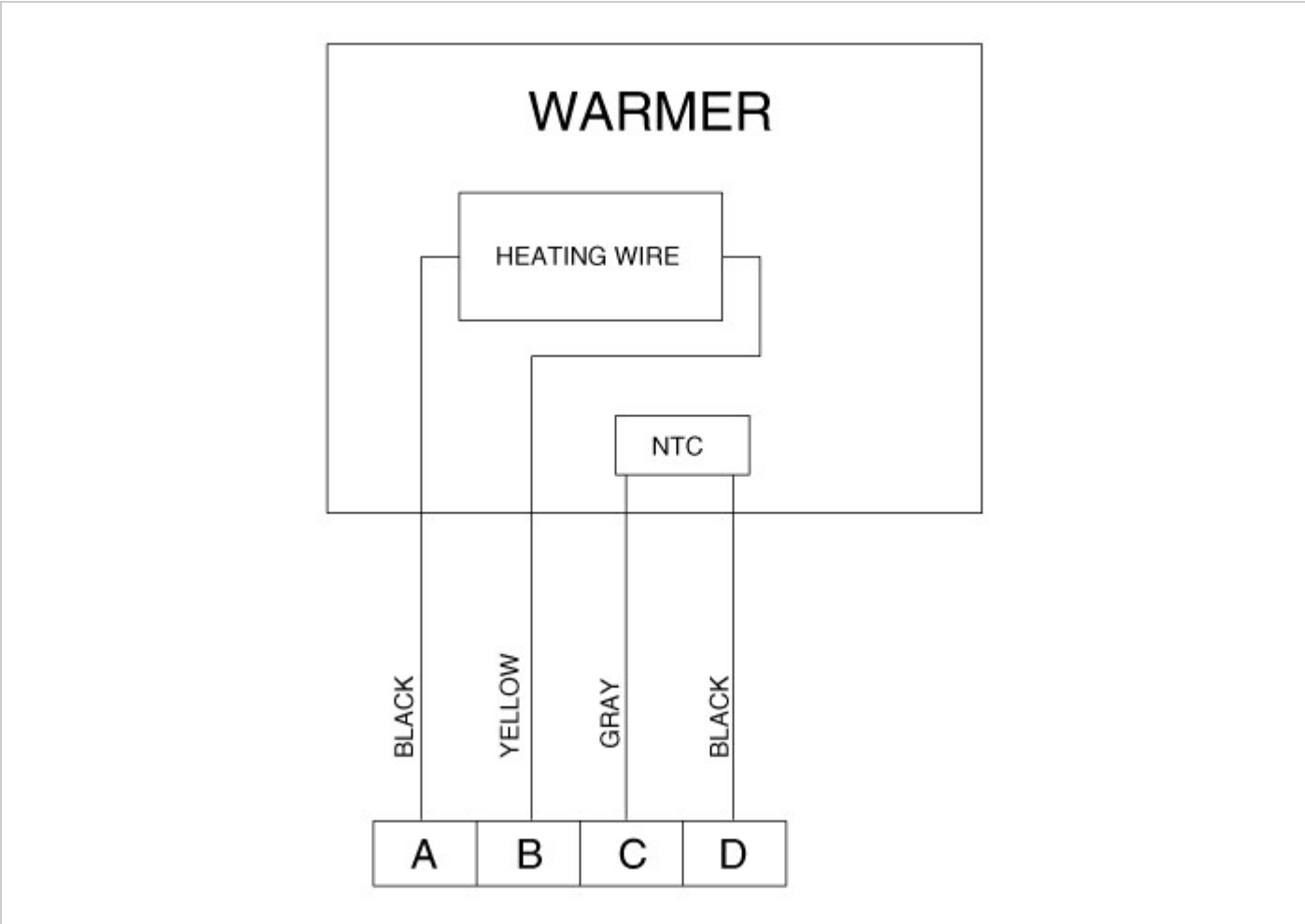

Termainal function

Body control module

Pin	Function
D3	Ignition 2_Heated handle power
D4	Ignition 2_Heated handle power_2
D5	Heated handle
C22	NTC (-)
C9	NTC (+)
C4	Heated handle switch

Heated steering wheel pad

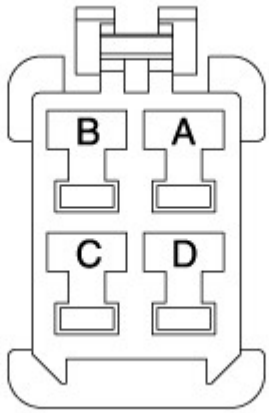

Housing	Pin	Function	Wire color
Pad	A	Ground	BLACK
	B	HEATER	YELLOW
	C	NTC+	GRAY
	D	NTC-	BLACK

Heated steering wheel switch

Pin	Function
7	Wheel heated
12	Wheel heated IND.
1	Ground

Steering System

Removal

1. Disconnect the negative (-) battery terminal.
2. Remove the glove box.
   (Refer to Body - "Glove Box Upper Cover Assembly")
3. Remove the smart key unit.
   (Refer to Body - "Smart Key Unit")
4. Disconnect the body control module connectors (A).
5. Remove the body control module (A) after loosening the mounting nuts.
6. To install, reverse the removal procedure.

Heated steering wheel switch

1. Disconnect the negative (-) battery terminal.
2. Remove the floor console upper complete assembly.
   (Refer to Body - "Floor Console Assembly")
3. Disconnect the connector (A).

4. To install, reverse the removal procedure.

Inpection

1. Measure a resistance of NTC and Heated pad.
   – NTC resistance (Gray, Black) - 10.0 kΩ ± 10% (25°C)
   – Heated pad resistance (Yellow, Black) - 1.8 ± 0.2Ω
2. Measure a temperature.
   – The temperature of wheel surface grip must rise from -20°C to 20°C within 6 minute
   – The temperature of wheel surface grip must keep 38°C ± 4°C after 25 minute
   – At that time switch on, all measure point (1-8)

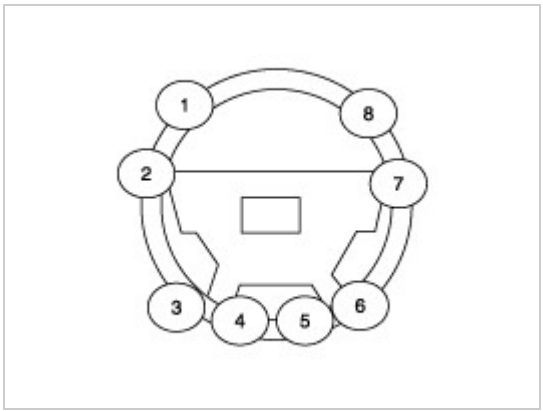

Steering System

Description

EPS (Electric power steering, Column assist type) system uses an electric motor to assist the steering force and it is an engine operation independent steering system.

EPS control module controls the motor operation according to information received from the each sensor and CAN (Controller Area Network), resulting in a more precise and timely control of steering assist than conventional engine-driven hydraulic systems.

Components (Torque Sensor, Fail-safe relay, etc.) of the EPS system are located inside the steering column & EPS unit assembly and the steering column & EPS unit assembly must not be disassemble to inspect or replace them.

Operation

Note With Regard to diagnosis

Trouble factor	Check item	Trouble symtom	Explanation	Note
Drop, impact, and overload	Motor ECU	Abnormal noise Circuit damage – Wrong welding point – Broken PCB – Damaged precise parts	– Visable or unvisable damage can occur.The steering wheel could pull to one side by using the dropped parts. – Precise parts of motor/ECU are sensitive to vibration and impact. – Overload can cause unexpected damage	– Do not use the impacted EPS. – Do not overload each parts.
	Torque sensor	Insufficient steering effort	Overload to INPUT shaft can cause malfunction of the torque sensor	– Do not impact the connecting parts (When inserting and torquing) – Use the specified tool to remove the steering wheel. (Do not hammer on it) – Do not use the impacted EPS
	Shaft	Insufficient steering effort (Uneven between LH and RH)		Do not use the impacted EPS
Pull/Dent	Harness	– Malfunction-impossible power operation – Malfunction of EPS	Disconnection between harness connecting portion and harness	Do not overload the harness

Abnormal storage temperature	Motor/ECU	Abnormal steering effort by improper operation of the motor/ECU	– Waterproof at the normal condition – Even a little moisture can cause malfunction of the precise parts of the motor/ECU	– Keep the normal temperature and proper moisture, while storaging – Avoid drowning

Schematic Diagrams

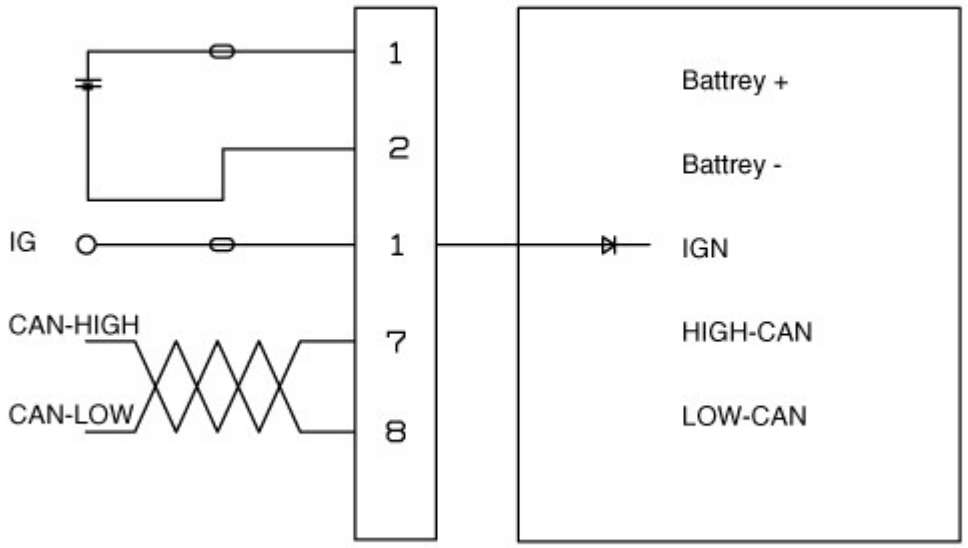

Terminal Function

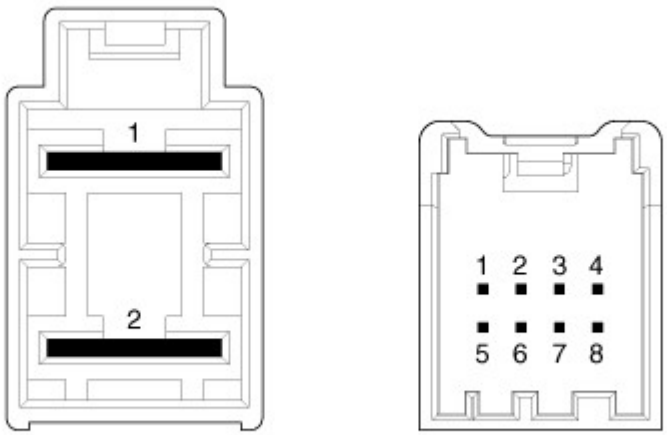

Type	Pin No	Description
Battery	1	Battery +
	2	Battery -
VSS	1	IGN
	2	-
	3	-
	4	-
	5	-
	6	-
	7	HIGH CAN
	8	LOW CAN

Components Location

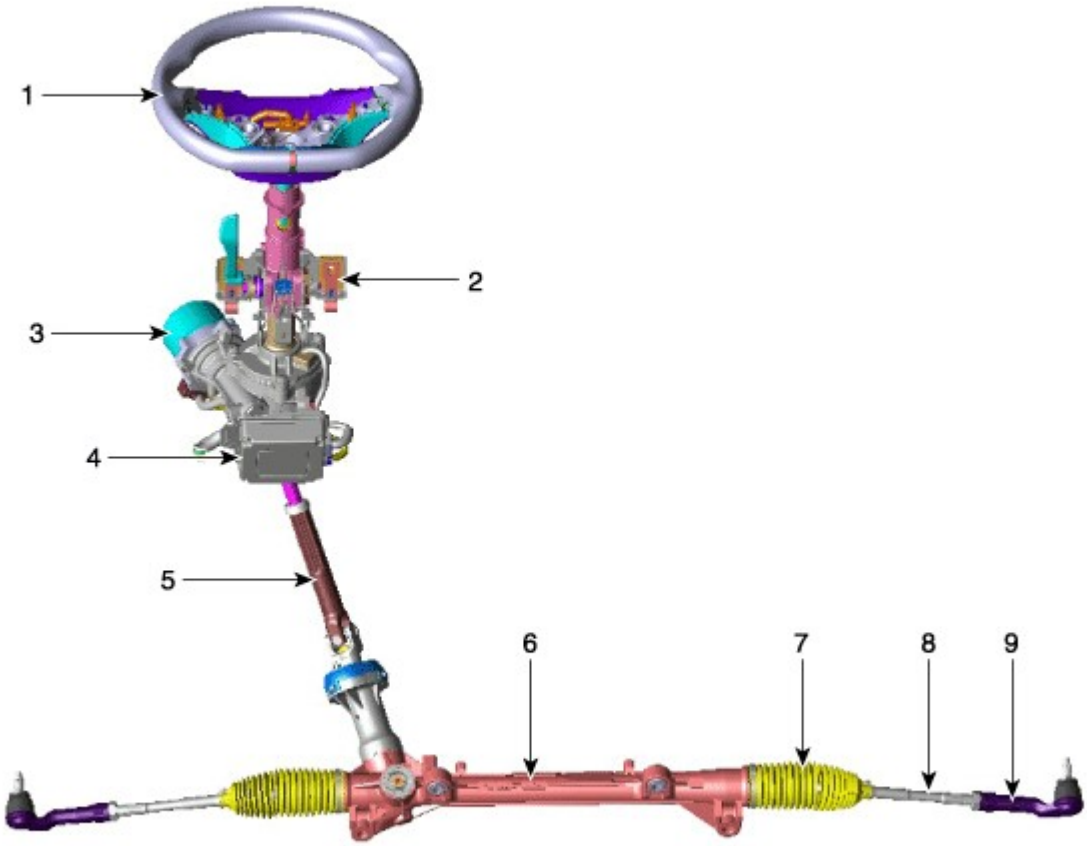

1. Steering wheel
2. Steering column
3. MDPS motor
4. MDPS ECU
5. Universal joint
6. Steering gear box
7. Bellows
8. Tie rod
9. Tie rod end

General Inspection

After or before servicing the EPS system, perform the troubleshooting and test procedure as follows. Compare the system condition with normal condition in the table below and if abnormal symptom is detected, perform necessary remedy and inspection.

Test Conditions	Symptoms	Assist Time	Warning light	Cause	Inspection Item
IG ON/ Engine ON/ Stationary→IG OFF/ Engine OFF/ Stationary	Steering assist failure	-	-	-	Normal
	Steering assist working	120 seconds	Light is on	IG power is supplied even when the IG is switched off. Steering angle is not initialized	① Check IG power line ② Use a scan tool to initialize steering angle
			Light is off	IG power is supplied even when the IG is switched off. Steering angle is not initialized &Failure in cluster.	① Check cluster wiring line ② Check Ignition power line ③ Use a scan tool to initialize steering angle
		70 seconds	Light is on	CAN BUS OFF or No EMS signals received	Check CAN communication line
			Light is off	(CAN BUS OFF or No EMS signals received) & Failure in cluster	① Check CAN communication line ② Check cluster wiring line.

IG ON/ Engine OFF/ Stationary	-	Steering assist failure	-	-	-	-
		Steering assist working	Duration	Light is on	CAN BUS OFF or No EMS signals received	① Check CAN communication line
				Light is off	(CAN BUS OFF or No EMS signals received) & Failure in cluster	① Check CAN communication line ② Check cluster wiring line
	When engine is turned on, IG stays at On, but engine goes off		Duration	Light is on	CAN BUS OFF or EMS signals received	Check CAN communication line
			120 seconds	Light is off	-	Normal
IG ON/ Engine ON/ Stationary		Steering assist failure	-	Lght is on	Faults in power supply of EPS system and Ignition	Check the power lines of EPS system and Ignition
			-	Lght is on	Diagnostic trouble code (DTC) appears	Use scanner to diagnose and troubleshoot
		Steering assist working	-	-	-	Normal
			-	Lght is on	Diagnostic trouble code (DTC) appears	Use scanner to diagnose and troubleshoot

IG : Ignition
ASP : Absolute Steering Position
CAN : Controller Area Network
EMS : Engine Management System

ASP (Absolute Steering Position) calibration or EPS type recognition

NOTICE

- Check if the battery is fully charged before ASP calibration or EPS type recognition.
- Be careful not to disconnect any cables connected to the vehicle or scan tool during ASP calibration or EPS type recognition.
- When the ASP calibration or EPS type recognition is completed, turn the ignition switch off and wait for several seconds, then start the engine to confirm normal operation of the vehicle.

ASP Calibration

1. Connect self-diagnosis connector (16pins) located in the lower of driver side crash pad to self-diagnosis device.
2. Turn the self-diagnosis device after key is ON.
3. After Selecting the "vehicle model" and "system", select the "ASP Calibration" on GDS vehicle selection screen.

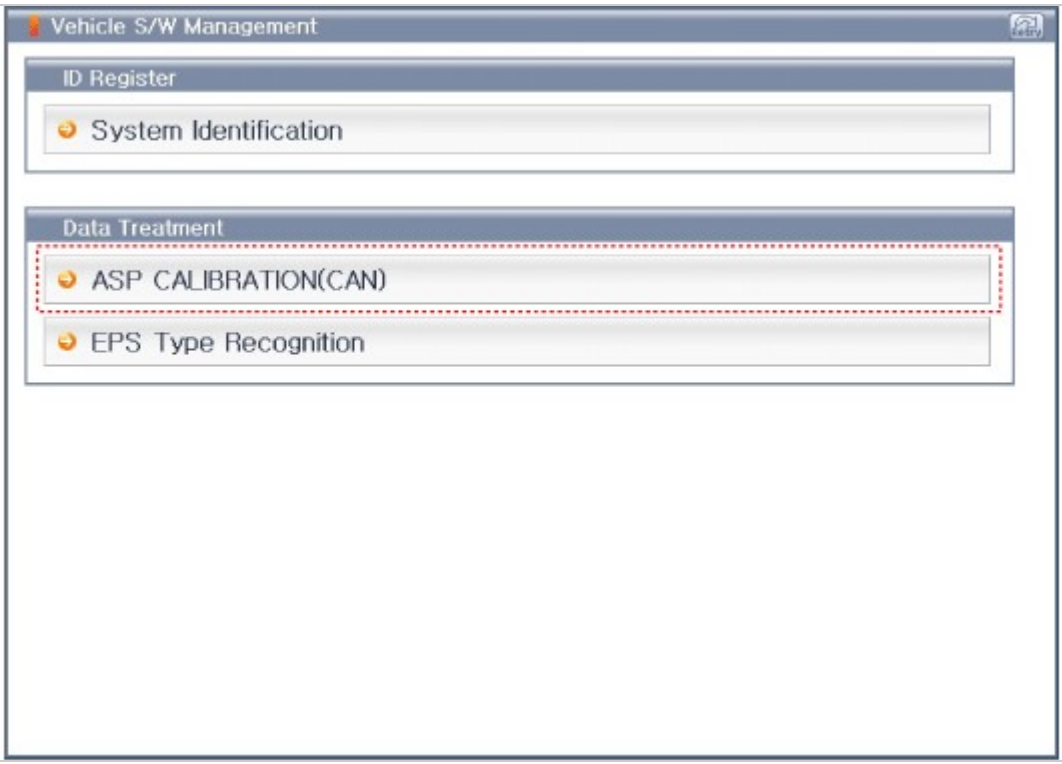

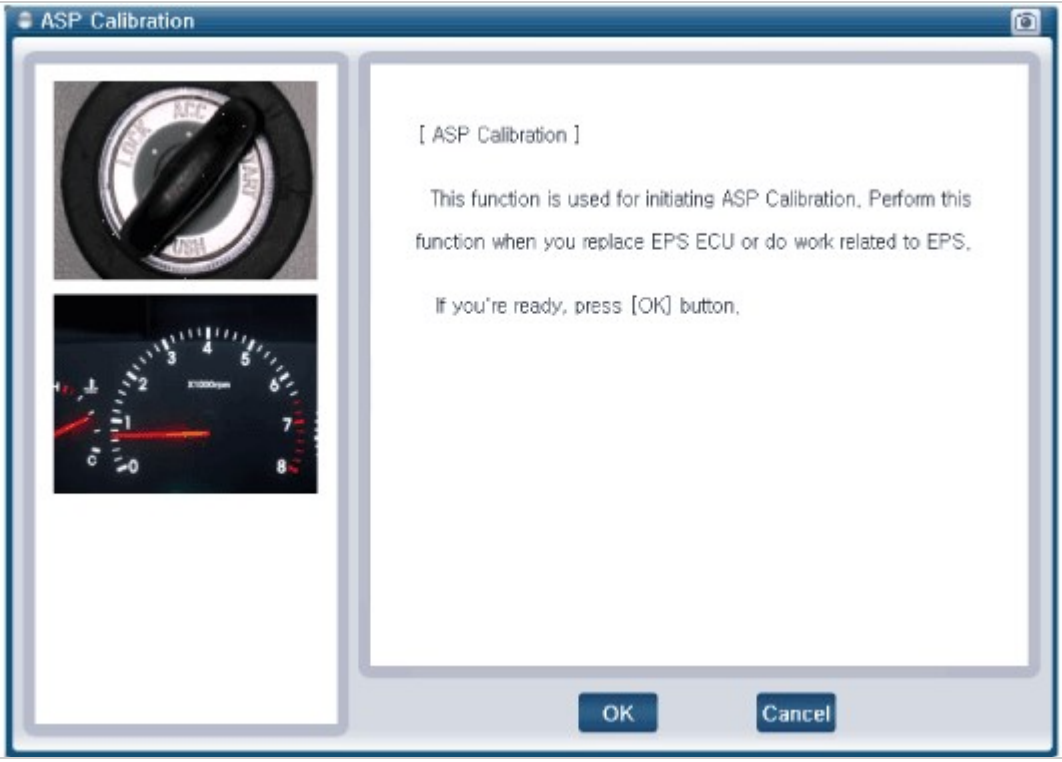

EPS Type Recognition

1. Connect self-diagnosis connector (16pins) located in the lower of driver side crash pad to self-diagnosis device.
2. Turn the self-diagnosis device after key is ON.
3. After Selecting the "vehicle model" and "system", select the "EPS Type Recognition" on GDS vehicle selection screen.

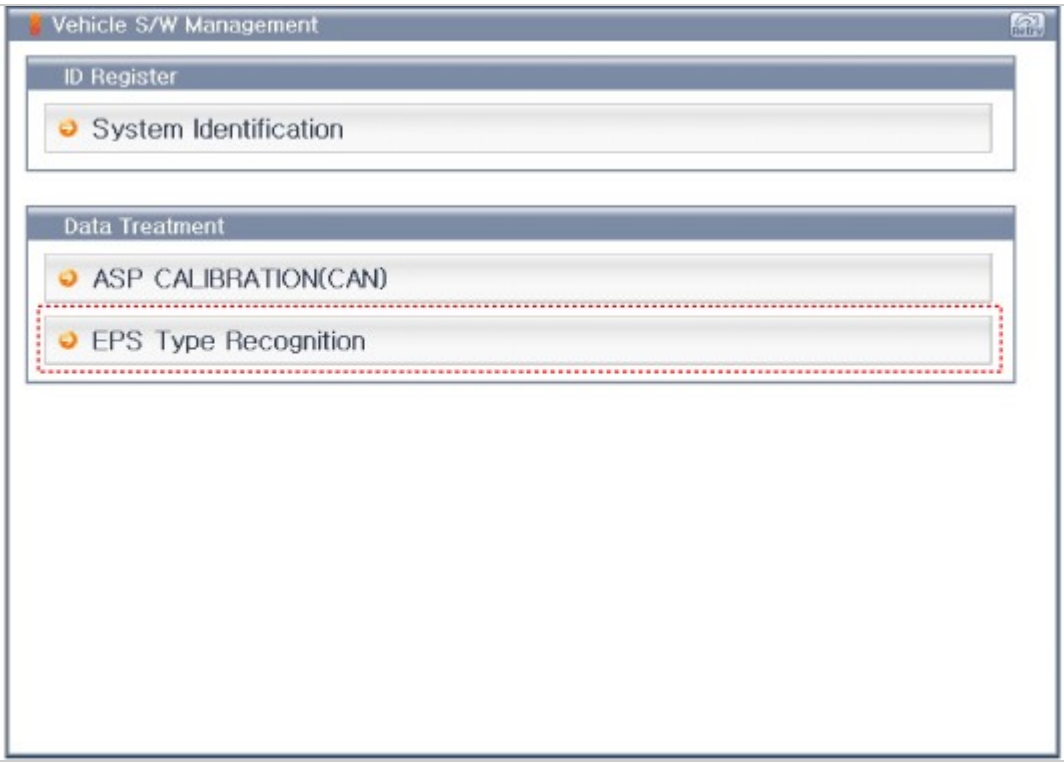

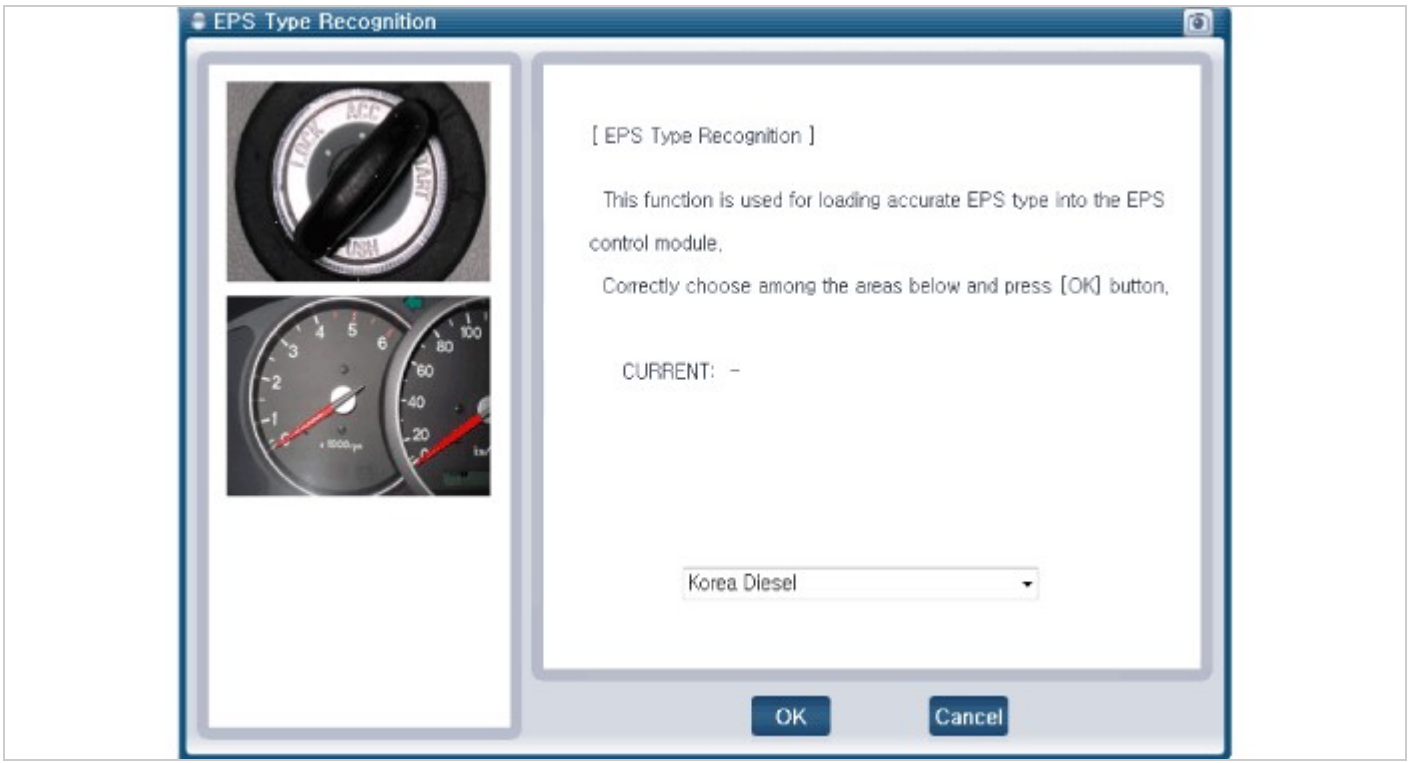

Removal

1. Disconnect the battery negative cable from the battery and then wait for at least 30 seconds.
2. Turn the steering wheel so that the front wheels are placed in the straight ahead position.
3. Remove the driver airbag module (DAB).

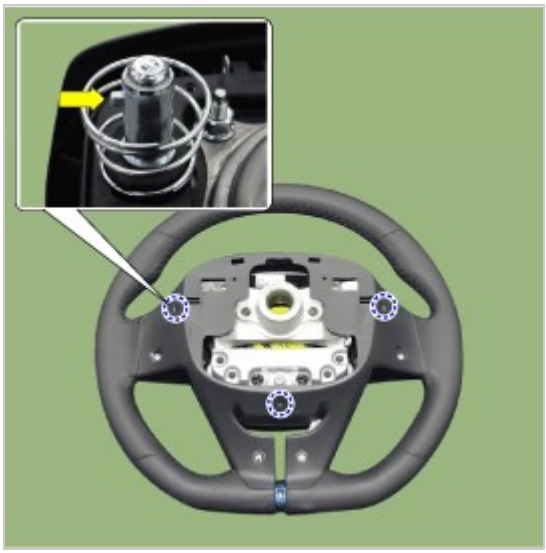

NOTICE

- Insert the end of the flat tool along the guide hole. (Φ5mm allen wrench recommend.)
- After inserting the tool, lightly press it. Can be easily remove the air bag module.

4. Disconnect the airbag module connector (A) and horn connector (B).

NOTICE

- The removed airbag module should be stored in a clean, dry place with the pad cover facing up.

5. Disconnect the connector (A).

6. Remove the steering wheel by loosening the lock bolt.

NOTICE

- Do not reuse the steering lock bolt.
- When assembling, match the gear teeth as the illustration below.

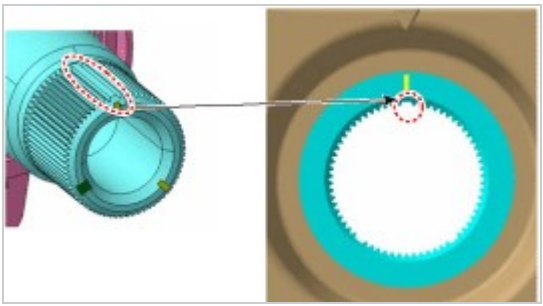

7. Loosen the screw and then remove the steering column upper (A) and lower shroud (B).

8. Disconnect the connector and then sepearte the clock spring (A).

NOTICE

- When installing, perform the "Clock spring manual neutral setting procedure".
  (Refer to Restraint - "Driver Airbag (DAB) Module and Clock Spring")

9. Disconnect the multifunction switch connector.

10. Loosen the screw and then remove the multifunction switch.

11. Remove the fixed clip (A) from the steering column.

12. Remove the crash pad lower panel.
    (Refer to Body - "Crash Pad")
13. Remove the knee airbag.

14. Disconnect the knee airbag connector.

15. Disconnect MDPS ECU connector.

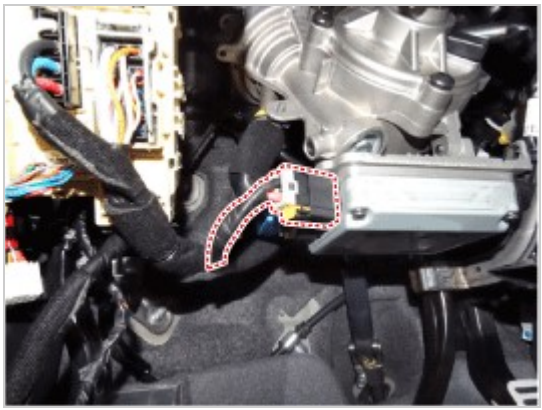

16. Loosen the bolt (A) and then disconnect the universal joint assembly from the pinion of the steering gear box.

Tightening torque :
32.4 - 37.3 N.m (3.3 - 3.8 kgf.m, 23.9 - 27.5 lb-ft)

NOTICE

- Do not reuse the bolt.
- Lock the steering wheel in the straight ahead position to prevent the damage of the clock spring inner cable.
- When assembling, insert the shark pin into the universal joint york slot as the illustration below.

17. Remove the steering column & EPS unit assembly by loosening the mounting bolt (B) and nuts (A).

Tightening torque
Nut : 25.0 - 29.4 N.m (2.5 - 3.0 kgf.m, 14.5 - 21.7 lb-ft)
Bolt : 53.9 - 58.8 N.m (5.5 - 6.0 kgf.m, 39.8 - 43.4 lb-ft)

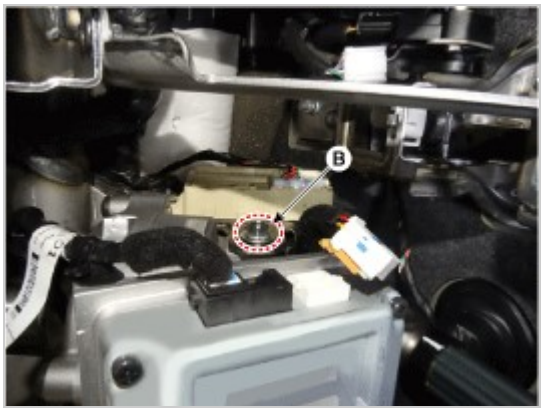

Disassembly

1. Loosen the bolt (A) and then disconnect the universal joint assembly from the steering column assembly.

   Tightening torque :
   49.0 - 58.8 N.m (5.0 - 6.0 kgf.m, 39.8 - 43.4 lb-ft)

2. To reassembly, reverse the disassembly procedure.
3. Reassembly is the reverse of the disassembly.

NOTICE

- Do not reuse the universal joint bolt.
- When assembling, match the gear teeth as the illustration below.

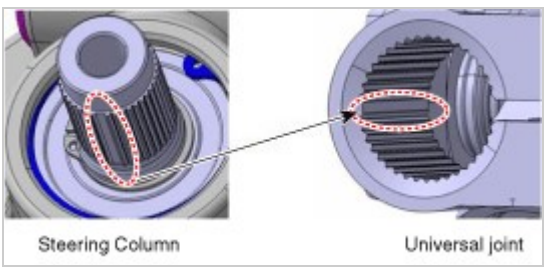

Installation

1. To install, reverse the removal procedure.
2. Connect self-diagnosis connector (16pins) located in the lower of driver side crash pad to self-diagnosis devic.
3. Conduct the "ASP Calibration".

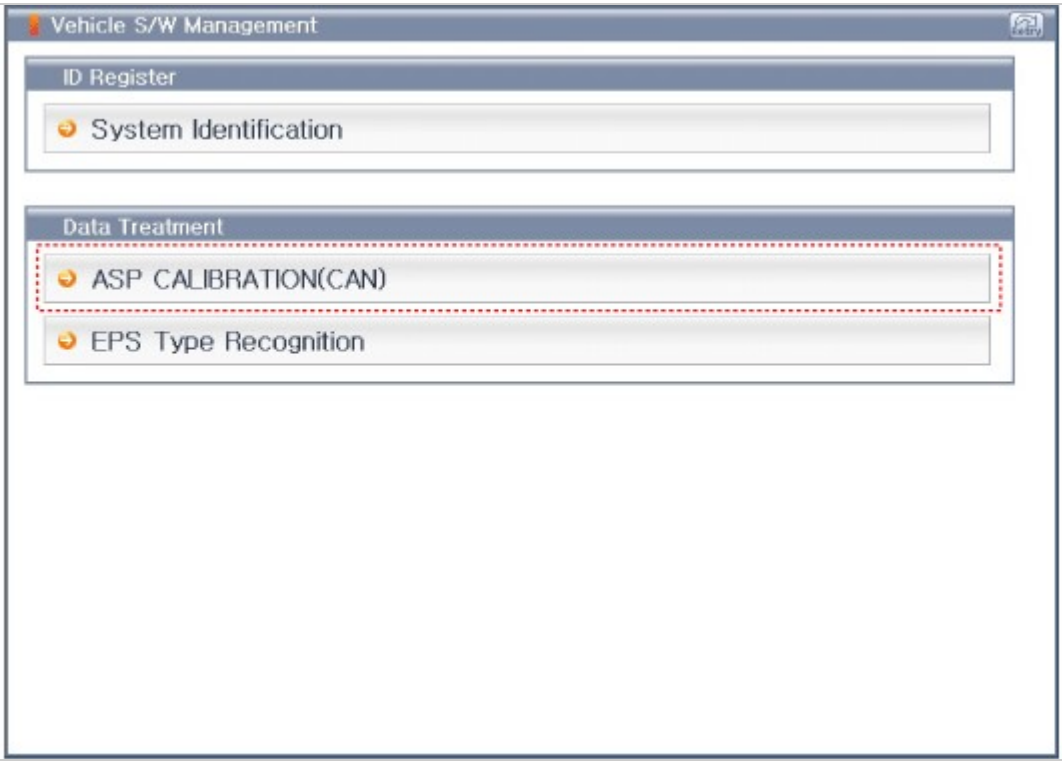

4. Conduct the "EPS Type Recognition".

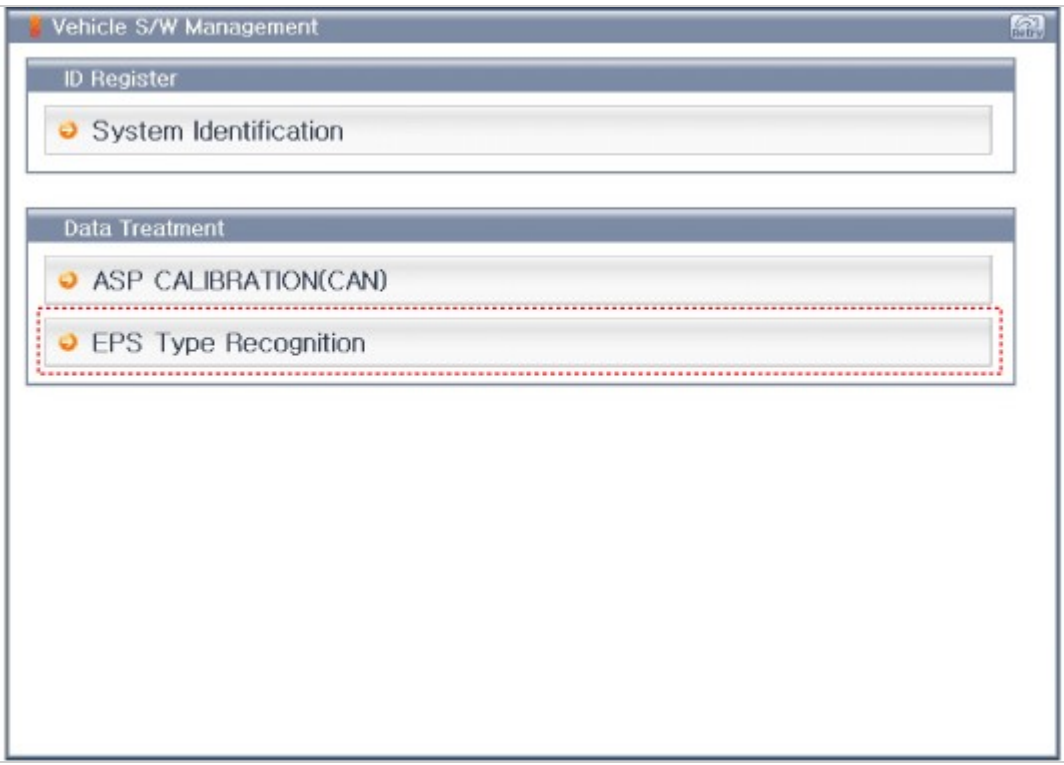

Removal

1. Loosen the bolt (A) and then disconnect the universal joint assembly from the pinion of the steering gear box.

   Tightening torque :
   32.4 - 37.3 N.m (3.3 - 3.8 kgf.m, 23.9 - 27.5 lb-ft)

NOTICE

- Do not reuse the bolt.
- Lock the steering wheel in the straight ahead position to prevent the damage of the clock spring inner cable.
- When assembling, insert the shark pin into the universal joint york slot as the illustration below.

2. Loosen the wheel nuts slightly.
   Raise the vehicle, and make sure it is securely supported.
3. Remove the front wheel and tire (A) from the front hub.

   Tightening torque :
   107.9 - 127.5 N.m (11.0 - 13.0 kgf.m, 79.6 - 94.0 lb-ft)

4. Remove the tie rod end ball joint.
   (1) Rmove the split pin (C).
   (2) Loosen the nut (B).
   (3) Using SST (09568-1S100), separate the ball joint (A) from the knuckle.

   Tightening torque :
   78.5 - 98.1 N.m (8.0 - 10.0 kgf.m, 57.9 - 72.3 lb-ft)

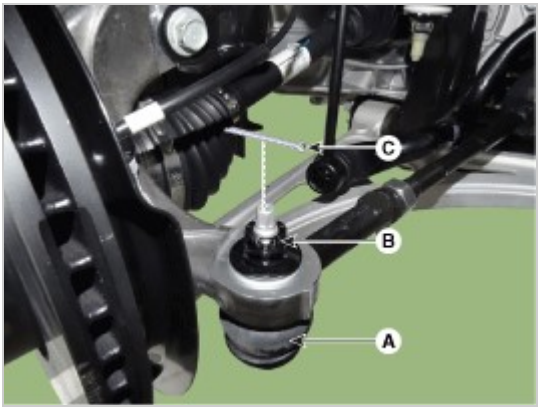

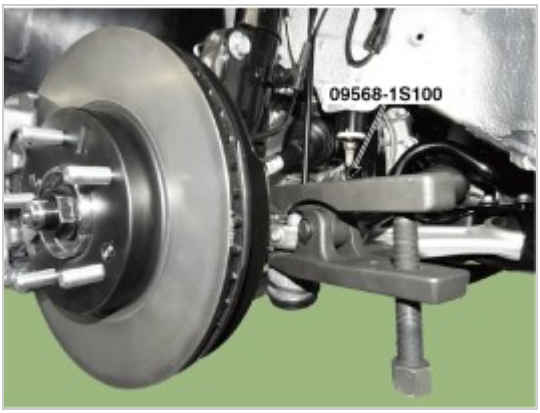

5. Loosen the lower arm nut and then remove the lower arm ball joint by using SST (09568-1S100).
   (1) Rmove the split pin (B).
   (2) Loosen the nut (C) and washer (D).
   (3) Using SST (09568-1S100), separate the ball joint (A) from the knuckle.

   Tightening torque :
   78.5 - 98.1 N.m (8.0 - 10.0 kgf.m, 57.9 - 72.3 lb-ft)

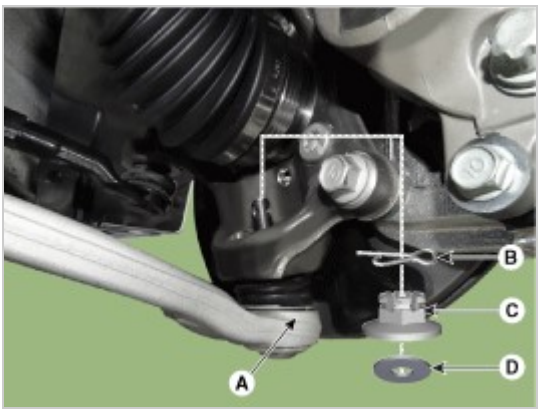

NOTICE

- Do not reuse the lower arm lock nut (A).

6. Disconnect the stabilizer link with the front strut assembly after loosening the nut.

   Tightening torque :
   98.1 - 117.7 N.m (10.0 - 12.0 kgf.m, 72.3 - 86.8 lb-ft)

NOTICE

- When loosening the nut, fix the outer hexagon of stabilizer bar link.
- Be careful not to damage the stabilizer link boots.

7. Remove the front subframe.
   (Refer to Suspension System - "Sub Frame")
8. Remove the protector (A).

   Tightening torque :
   6.9 - 10.8 N.m (0.7 - 1.1 kgf.m, 5.1 - 8.0 lb-ft)

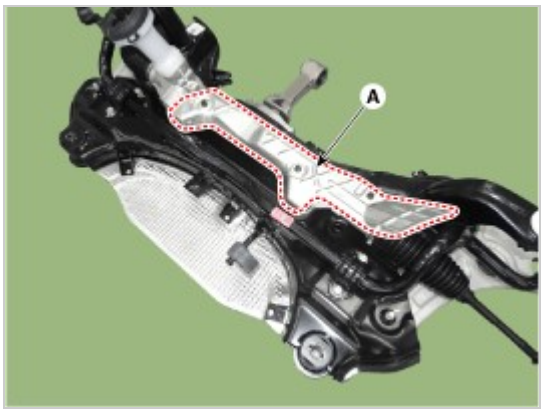

9. Remove the steering gearbox from the front sub frame by loosening the mounting bolts.

   Tightening torque :
   88.2 - 107.8 N.m (9.0 - 11.0 kgf.m, 65.0 - 79.5 lb-ft)

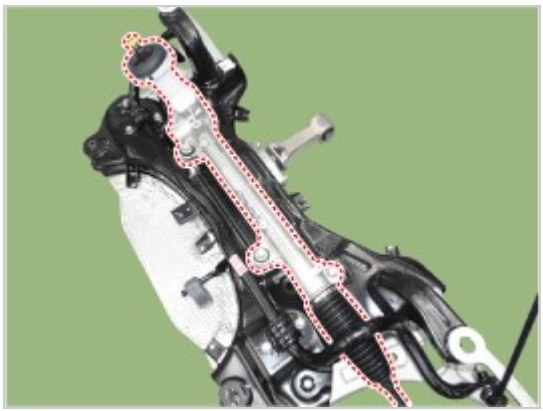

10. To install, reverse the removal procedure.
11. Check the front alignment.
    (Refer to Suspension System - "Front Alignment")

Replacement

NOTICE

- Do not disassembly the steering gear box.
- If disassembly the steering gear box, the quality(Noise / cleanliness / functions) is not guaranteed.

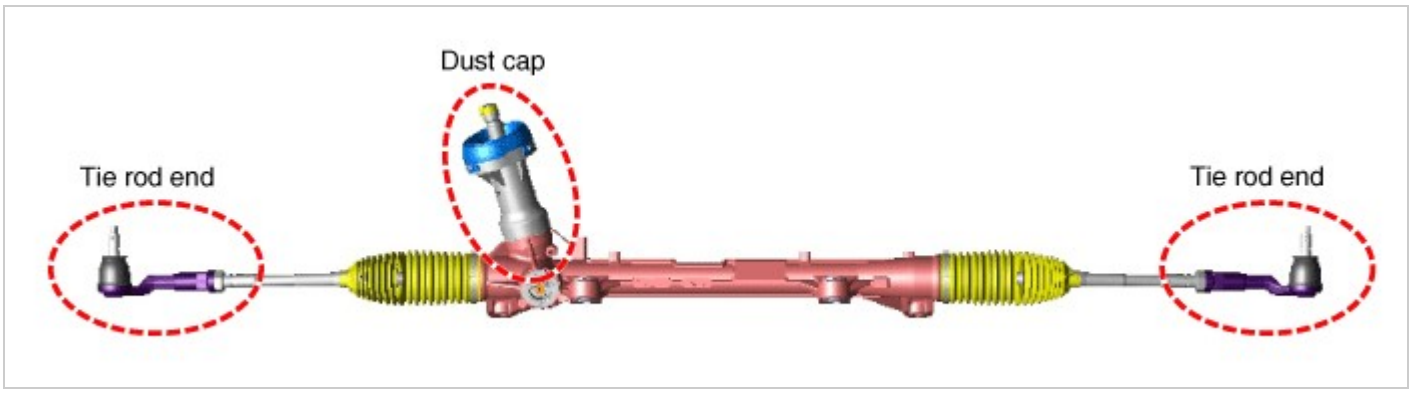
Dust cap
Tie rod end
Tie rod end