Safety Precaution

Precautions to take before servicing high voltage system

DANGER

- Since hybrid vehicles contain a high voltage battery, if the high voltage system or vehicles are handled incorrectly, this might lead to a serious accidents like electric shock and electric leakage.

WARNING

- Be sure to shut off the high voltage by removing the safety plug before performing inspection or repairing the high voltage system.
  (Refer to "High Voltage Shut-off Procedures")
- The responsible worker keeps the removed safety plug to prevent the plug from being connected by mistake.
- Do not keep any metal objects (watch, ring etc.) while working on the high voltage system, which it can cause serious accidents like electric shock.
- Before beginning work on the high voltage system, the worker should wear personal protective equipment to prevent safety accidents.
  (Refer to "Personal Protective Equipment")
- Never allow workers who are not wear personal protective equipment to touch the high voltage system. High voltage components should be covered with an insulation sheet to prevent safety accidents.
- Use insulation tools when working on the high voltage system.
- Put the removed high voltage components on the insulation mat.

Information

- All the high voltage wiring and connectors are orange.
- A caution label for high voltage is attached to the high voltage components.
- High voltage components :
  High Voltage Battery Pack Assembly, Power Relay Assembly (PRA), BMS ECU, Hybrid Power Control Unit (HPCU), Hybrid Drive Motor, HSG, Electric A/C Compressor, Low DC/DC Converter (LDC), Power Cable, Electric Compressor etc.

CAUTION

- Inform of danger of high voltage by putting the "high voltage caution" on the vehicle as image below.

SAMPLE

DANGER

High Voltage : Do not touch during operation.

Person in charge : _____

Copy this page and put it after folding on the roof of the vehicle in service.

DANGER

High Voltage : Do not touch during operation.

Person in charge : _____

Personal Protective Equipment

Name	Illustration	Description
Insulation glove		Used when inspecting or working on the high voltage components [Insulation performance : 1000V / 300A or above]
Insulation shoes		Used when inspecting or working on the high voltage components

Insulation clothes		Used in the case below • During Removal & installation or inspection of the high voltage battery terminals or wiring, which spark might happen. • During working on the high voltage battery pack assembly.
Insulation helmet	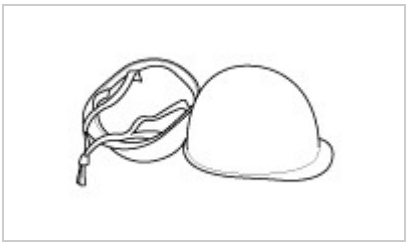	
Safety glasses		
Face shield		
Insulation mat	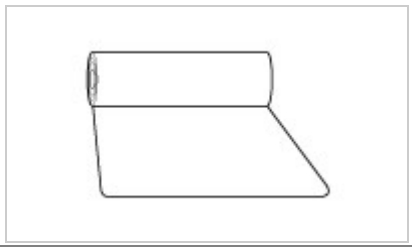	Putting the removed high voltage components on the insulation mat to prevent safety accidents.
Insulation sheet	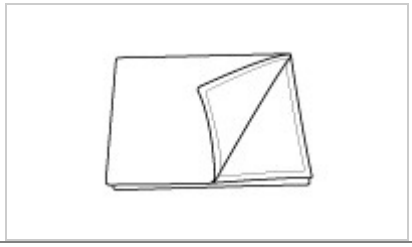	Covering the high voltage components with insulation sheet to prevent people who don’t wear the personal protective equipment from safety accidents.

Precautions to take when handling power cable

- Immediately insulate the high voltage terminal after reconnecting the terminal (use insulation tape).
- Tighten the high voltage terminal screw to spec torque.
- Be careful that (+) and (-) terminals do not come in contact when connecting or disconnecting power cable and busbar.

Precautions to take when handling high voltage battery

- When transporting high voltage battery, be sure to keep it flat and leveled. Failure to do so may decrease the battery performance and/or its life-span.
- High voltage battery"s performance may decrease if it is exposed to high temperature for a lengthy period. As a result, heat-treatment after painting must not exceed 70°C/ 30 minutes, or 80°C/ 20 minutes.

Precautions in case of fire on high voltage battery system

- If the fire occurs indoor, ventilate the area to let out hydrogen gas.
- ACB fire extinguisher is recommended for putting out the fire. (water may also be used).

Precautions in case of high voltage battery gas or electrolyte leakage

-

Turn OFF the Start button. Keep the Smart Key at least 2 meters away from the vehicle to prevent unintended engine start.

- Gas is hydrogen and alkaline vapor. If the leakage is indoor, ventilate the area immediately and evacuate to a safe location.
- If the leaked liquid comes in contact with skin, immediately neutralize the affected area with boric acid solution, then clean with tap water or saline solution.
- If the leaked vapor or liquid gets in the eye, immediately clean the affected eye with water then get medical attention.
- If the gas leakage is caused by high temperature, then do NOT use the battery until the high voltage battery fully cools down to room temperature.

Precautions when handling the vehicle after an accident

- Be sure to wear insulated gloves (or rubber gloves), protective goggles, insulated suite, and insulated boots.
- Do NOT touch bare cable under any condition.
  (Refer to "Precautions when handling power cable")
- In case of vehicle fire, put out the fire with ABC extinguisher. Do NOT use water (usage of large volume of water is okay, but small volume can worsen the situation).
- If more than half of the vehicle is submerged, then do NOT go near the Safety Switch or other high voltage related components. If such a component must be accessed, then move the vehicle to the safe location first before handling the component.
- Gas is hydrogen and alkaline vapor. If the leakage is indoor, ventilate the area immediately and evacuate to a safe location.
- If the leaked liquid comes in contact with skin, immediately neutralize the affected area with boric acid solution, then clean with tap water or saline solution.
- Refer to "High voltage cut-off procedure" if the high voltage needs to be cut off.

Preparations when servicing the accident vehicle

- Be sure to wear insulated gloves (or rubber gloves), protective goggles, insulated suite, and insulated boots.
- Boric Acid Power or Solution
- ABC Extinguisher
- Towel for cleaning electrolyte
- Vinyl tape (for insulating terminal)
- Mega ohm tester (for checking high voltage)

Precautions in case HEV is left unattended for a lengthy period

- Turn OFF the Start button. Keep the Smart Key at least 2 meters away from the vehicle to prevent unintended engine start.
- We recommend that HEV is driven at least 1 time for over 30 minutes every 2 months to protect and manage the high voltage battery (inquire at relevant team in HMC).
- When inspecting or exchanging the auxiliary battery, check high voltage battery SOC reset related problems.

Hybrid Vehicle Refrigerant Recovery / Charging Precautions

- Since the electric compressor uses high-voltage, you should use POE oil which have high Volumetric Resistivity.
- Do not use the same A/C recovery / charging station as conventional belt-driven compressors.

WARNING

- If the POE oil of the system gets mixed with PAG oil, then dielectric breakdown due to decreased volumetric Resistivity can occur and inoperative A/C compressor may result, A/C compressor may not work

High Voltage Shut-off Procedures

WARNING

- Be sure to read and follow the "General Safety Information and Caution" before doing any work related with the high voltage system. Failure to follow the safety instructions may result in serious electrical injuries.
- Be sure to read and follow the "High Voltage Shut-off Procedures" before doing any work related with the high voltage system. Failure to follow the safety instructions may result in serious electrical injuries.

Information

- High voltage components :
  High Voltage Battery Pack Assembly, Power Relay Assembly (PRA), BMS ECU, Hybrid Power Control Unit (HPCU), Hybrid Drive Motor, HSG, Electric A/C Compressor, Low DC/DC Converter (LDC), Power Cable, Electric Compressor etc.

1. Turn the ignition switch OFF and disconnect the auxiliary 12V battery negative (-) terminal.

2. Remove the safety plug cover (A).

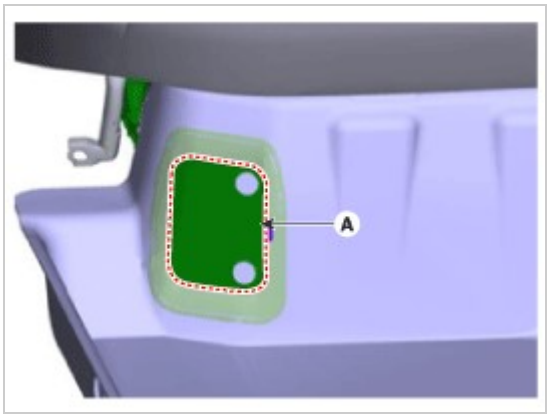

3. Unfasten the hook (A) and then remove the safety plug (C) by pulling the lever (B) to the direction of arrow.

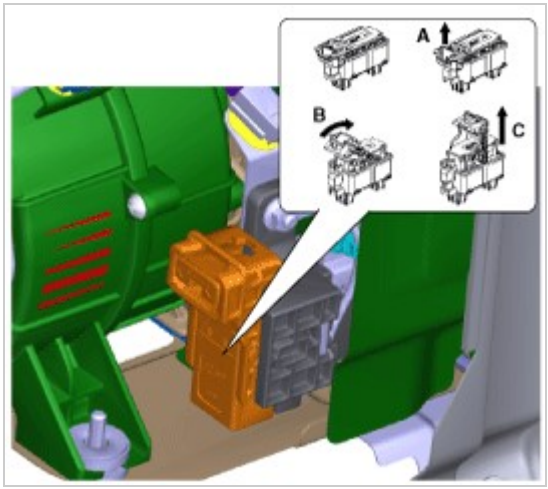

4. Wait for more than 5 minutes so that the capacitor in the high voltage system can be fully discharged.
5. Measure the voltage between the inverter terminals to check that the capacitor in the inverter is discharged completely.
   (1) Remove air cleaner assembly and air duct.
   (Refer to Engine Mechanical System - "Air Cleaner")
   (2) Disconnect the inverter power cable (A).

Information

- Disconnect the inverter power cable as the procedures below.

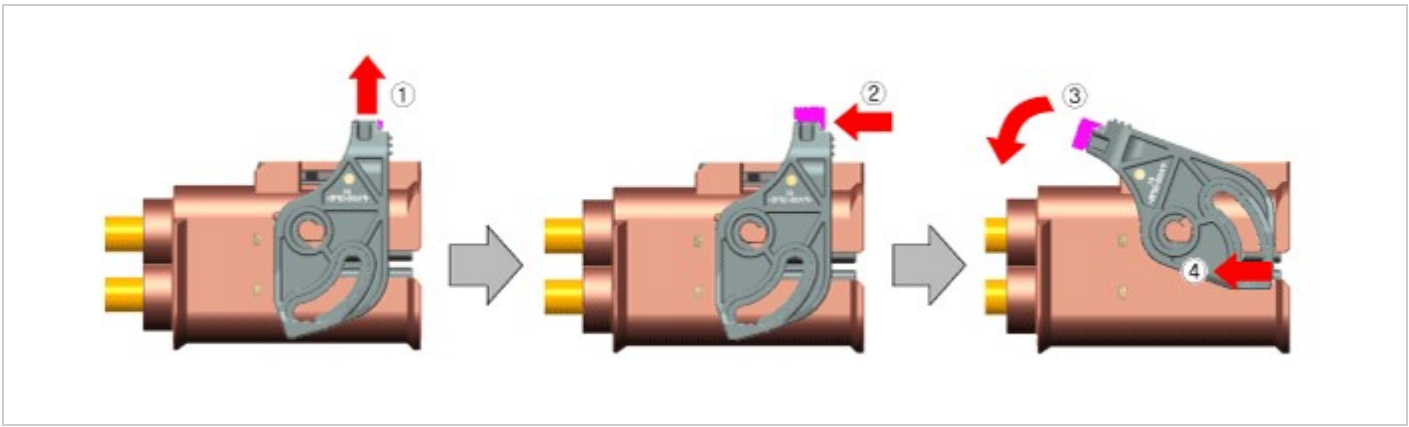

(3) Measure the voltage between the inverter (+) terminal and the inverter (-) terminal.

Less than 30V : High voltage circuit properly shut
More than 30V : Fault on high voltage circuit

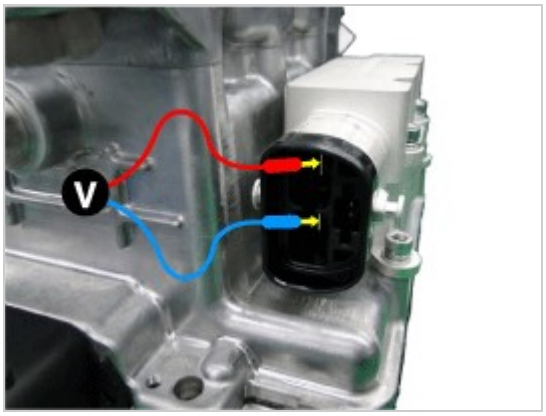

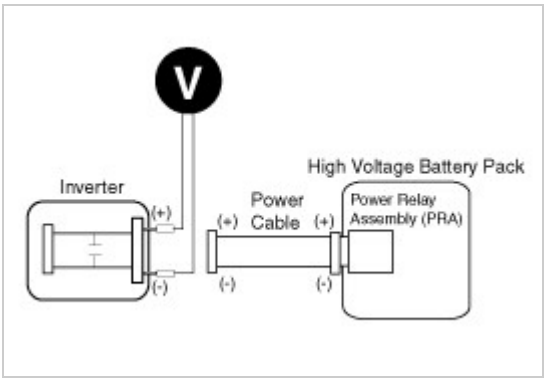

WARNING

- If measured more than 30V, check if the safety plug is removed completely.If measured more than 30V despite the safety plug is removed, there can be serious problems on the high voltage circuit. In this case, check DTC and never touch the high voltage system circuits.

Engine Clutch System

Description

Transmits or blocks the driving power of the engine when switching between the EV and HEV modes.

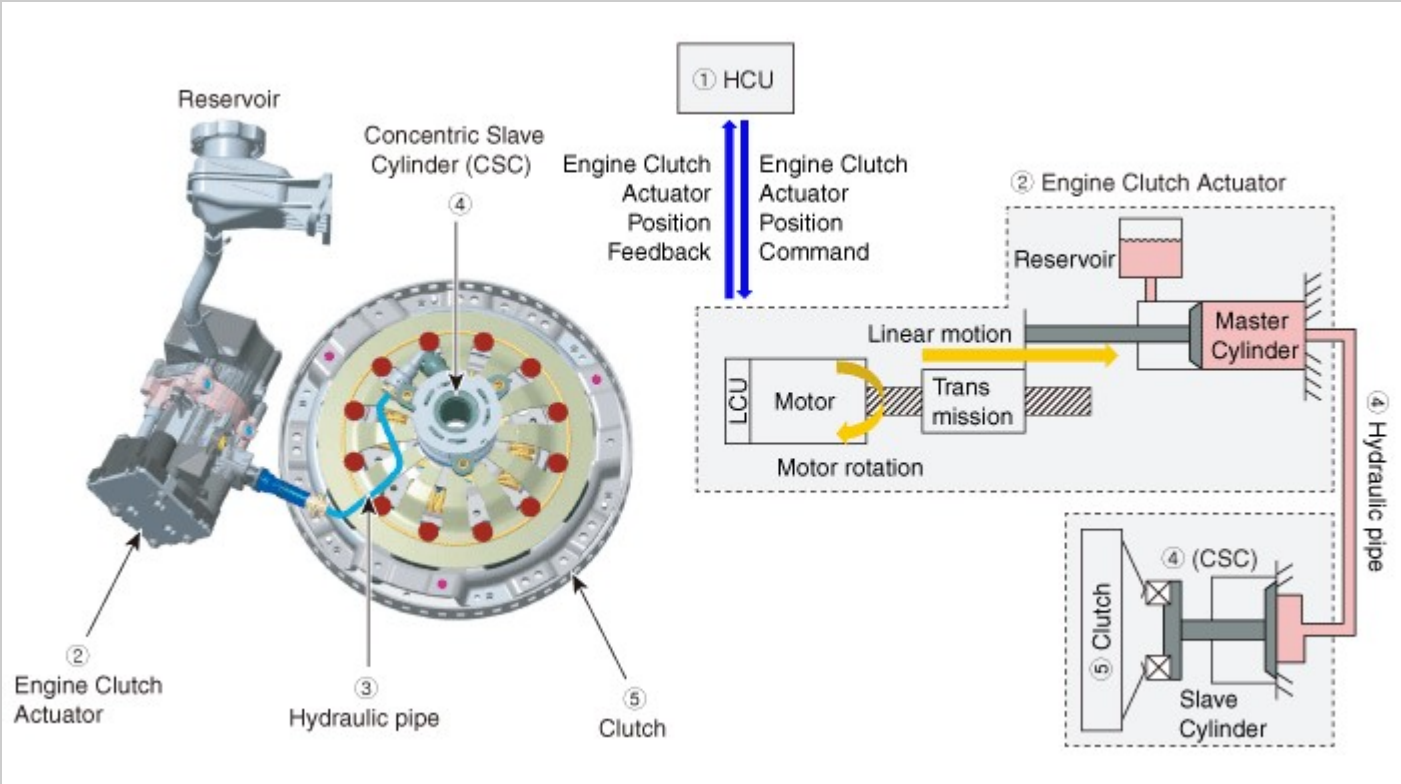

Engine Clutch System

Specifications

[Clutch Cover and Disc]

Items		Specifications
Clutch operation method		Hydraulic motor type
Clutch cover	Type	Diaphragm spring strap
Clutch disc	Type	Single dry with diaphragm
	Faling diameter (Outer × inner)	Ø225 × Ø175mm (Ø8.8582 × Ø6.8897 in.)
	Clutch disc thickness [When free]	6.4 ± 0.2 mm (0.2519 ± 0.0078 in.)

[Engine Clutch Actuator]

Items	Specifications
Operation method	BLDC Motor
Input voltage (V)	12
Max power (W)	480
Operating temperature (°C)	- 30 to 105 °C
Resistance (Ω)	120
Max pressure	43 barz

Service Standard

Items	Specifications
Clutch disc rivet depth	0.3 mm (0.0118 in.) less than

Tightening Torques

Item	N.m	kgf.m	lb-ft
Clutch cover assembly mounting bolt	11.8 - 14.7	1.2 - 1.5	8.7 - 10.8
Engine clutch actuator mounting bolt	21.6 - 26.5	2.2 - 2.7	15.9 - 19.5
Concentric slave cylinder mounting bolt	9.8 - 11.8	1.0 - 1.2	7.2 - 8.7
Hydraulic pipe bracket mounting bolt	9.8 - 11.8	1.0 - 1.2	7.2 - 8.7
Reservoir mounting bolt	21.6 - 26.5	2.2 - 2.7	15.9 - 19.5

Lubricants

Items	Specified lubricants	Quantity
Hybrid motor input shaft spline side	CASMOLY L9508	0.2g
Engine clutch actuator reservoir	Brake fluid DOT 3 or DOT	Remove air from the hydraulic line and then inject hydraulic fluid to the reservoir so that it comes between the MAX and MIN levels of the reservoir.

Engine Clutch System

Special Service Tools

Tool (Number and name)	Illustration	Use
Clutch disc guide & adapter A: 09411-1P000 B: 09411-G2100	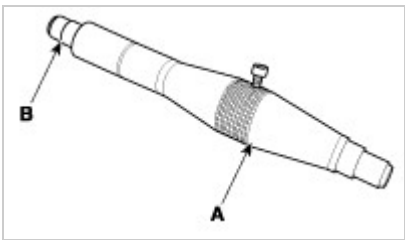	Installation of the clutch disc.

Engine Clutch System

Components

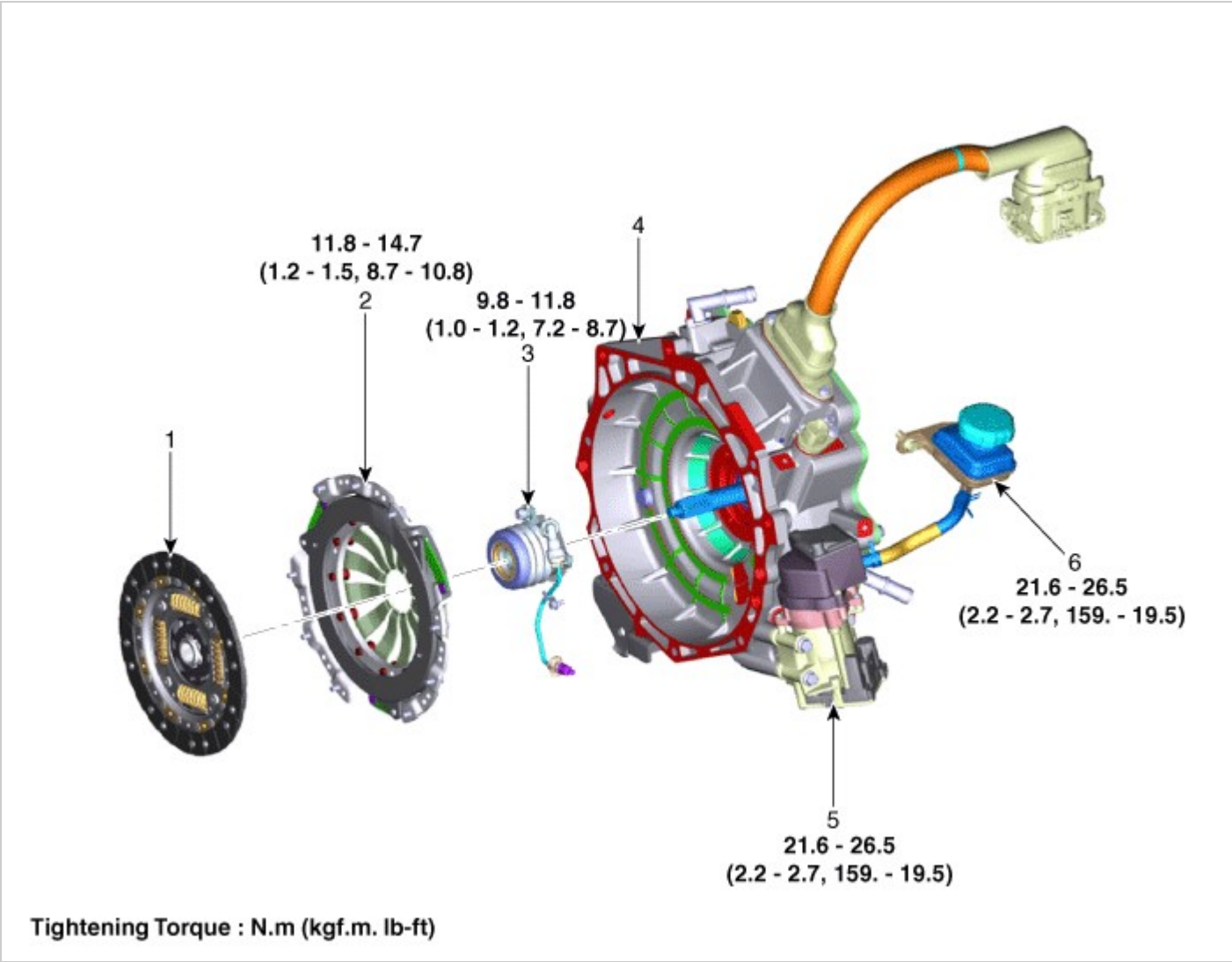

1. Clutch disc
2. Clutch cover
3. Concentric slave cylinder
4. Hybrid motor assembly
5. Engine clutch actuator
6. Reservoir

Engine Clutch System

Specifications

Items	Specifications
Operation method	BLDC Motor
Input voltage (V)	12
Max power (W)	480
Operating temperature (°C)	- 30 to 105 °C
Resistance (Ω)	120
Max pressure	43 bar

Engine Clutch System

Circuit Diagram

[Circuit Diagram]

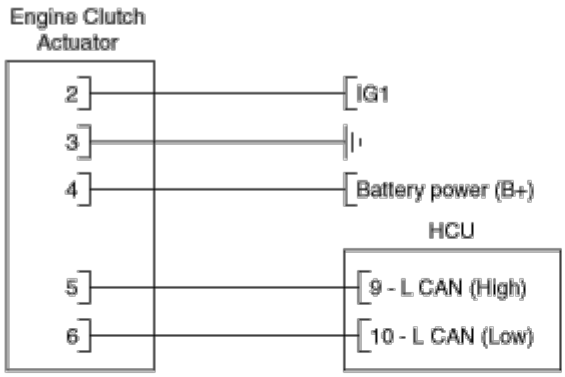

[Connection Information]

Terminal	Function
1	-
2	IG1
3	Ground
4	Battery power (B+)
5	L CAN (High)
6	L CAN (Low)

[Harness Connector]

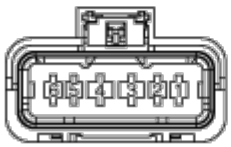

C107
Engine Clutch Actuator

Engine Clutch System

Removal

1. Turn the ignition switch OFF and disconnect the battery (-) terminal.
2. Remove the engine room under cover.
   (Refer to Engine Mechanical System - "Engine Room Under Cover")
3. Disconnect the engine clutch actuator connector (A).

NOTICE

- Make sure that the hydraulic fluid or foreign substance does not enter the connector assembly of the actuator.
  (Seal the assembly after disengaging the connector.)
- Be sure to lift the yellow safety pin before disengaging the connector.

4. Disconnect the reservoir hose (B).

⚠ CAUTION

- Disconnect the reservoir hose, and then Be careful not to leak the fluid.
- Do not spill brake fluid on the vehicle, it may damage the paint; if brake fluid does contact the paint, wash it off immediately with water

5. Remove the engine clutch actuator (A) from the hybrid motor assembly after loosening the bolts.

Tightening torque :
21.6 - 26.5 N.m (2.2 - 2.7 kgf.m, 15.9 - 19.5 lb-ft)

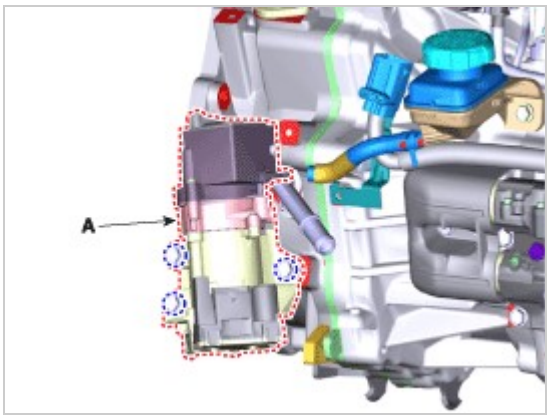

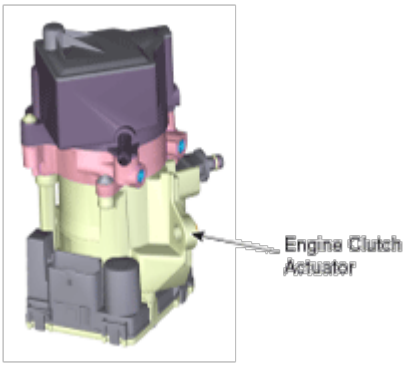

Installation

1. Install in the reverse order of removal.

NOTICE

- Before installing the engine clutch actuator, check the assembled state of the O-rings (A).

- After tightening bolts temporarily, tighten the bolt completely at the same time with regulation torque.

2. After replacing the Engine clutch actuator, operate the followings in order using GDS equipment.
   (1) Engine clutch inspection line learning and diagnostic information.

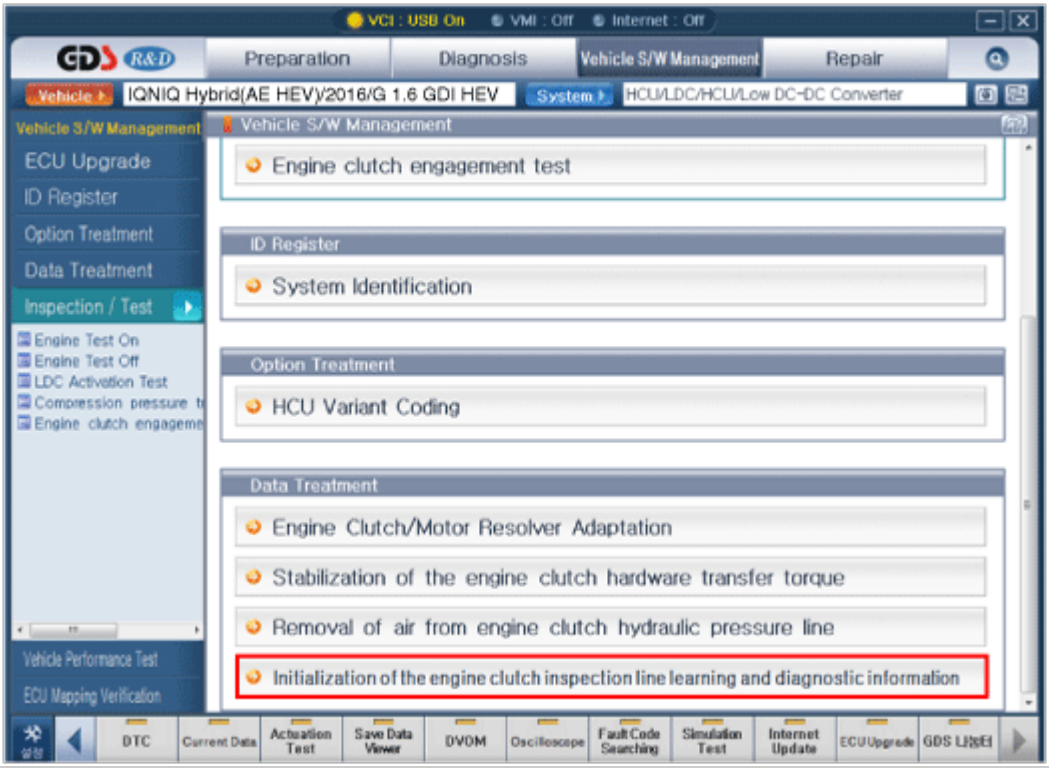

(2) Removal of air from engine clutch hydraulic pressure line.

Information

- When using a vacuum-pressure equipment to inject hydraulic fluid, the vacuum pressure should be no more than 2.5 torr and the injection pressure should be between 2.3 - 2.5 bars.
- If it is impossible to inject hydraulic fluid using the above condition, be sure to remove air from the hydraulic line of the engine clutch at a temperature between 0 - 40°C.

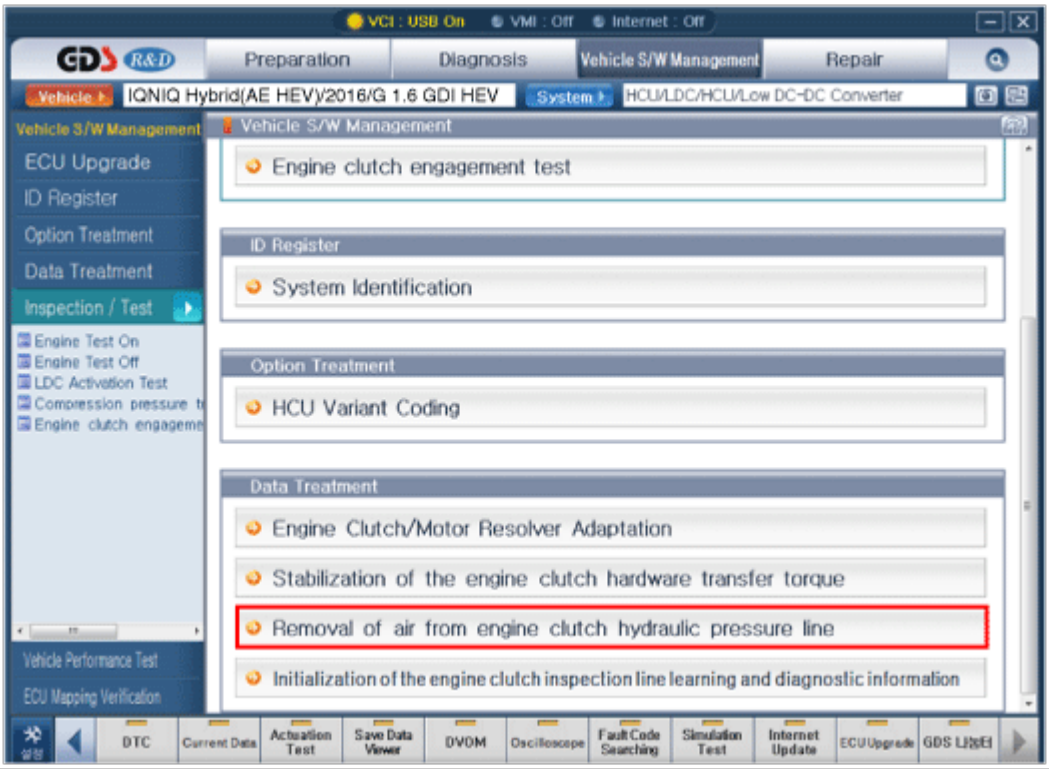

(3) Engine clutch/motor resolver adaptation.

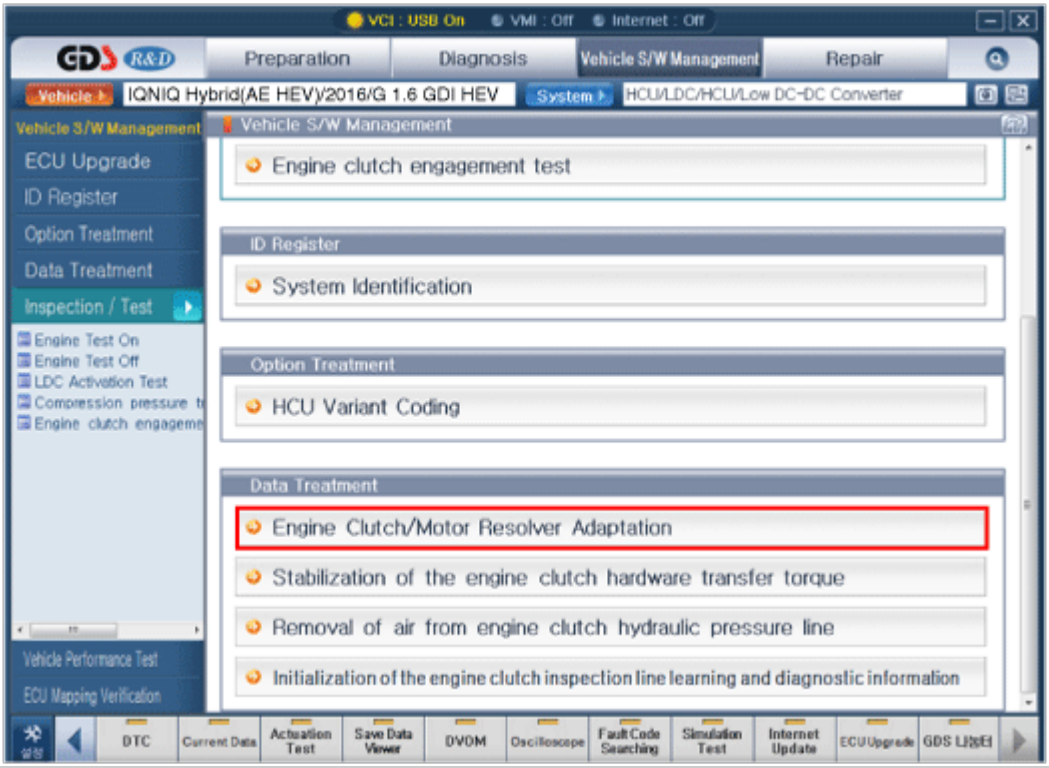

(4) Stabilization of the engine clutch hardware transfer torque.

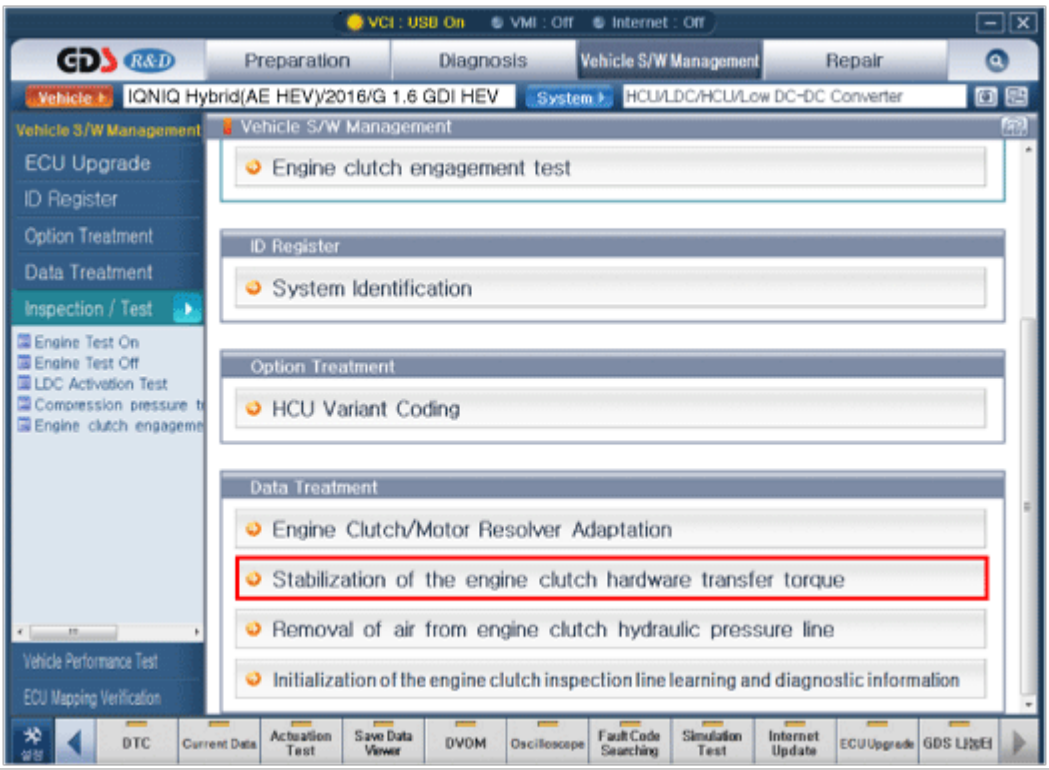

Engine Clutch System

Components

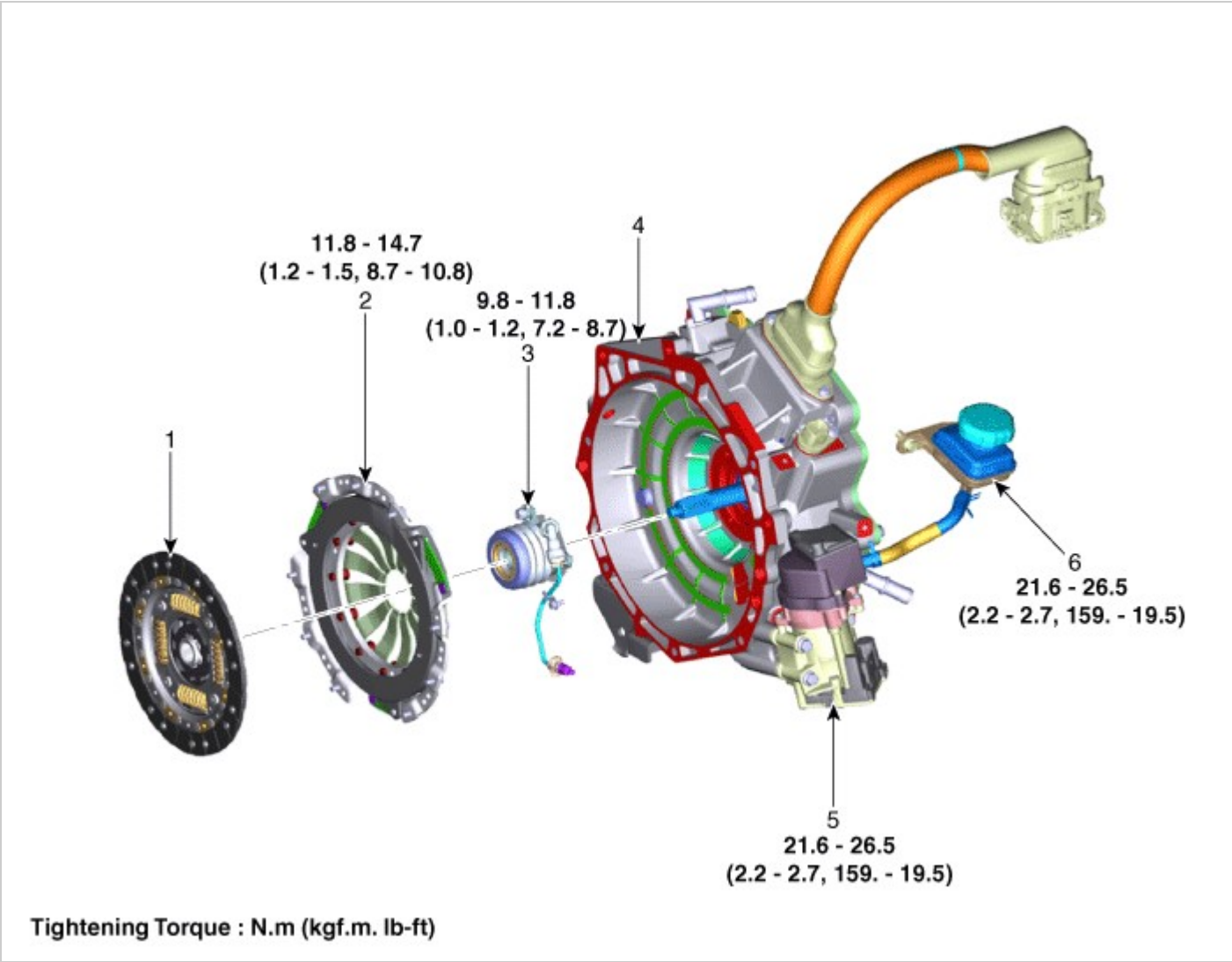

1. Clutch disc
2. Clutch cover
3. Concentric slave cylinder
4. Hybrid motor assembly
5. Engine clutch actuator
6. Reservoir

Engine Clutch System

Removal

1. Remove the hybrid motor assembly.
   (Refer to Hybrid Motor System - "Hybrid Motor Assembly")
2. Remove the engine clutch actuator.
   (Engine Clutch System - "Engine Clutch Actuator")
3. Remove the adapter (A).

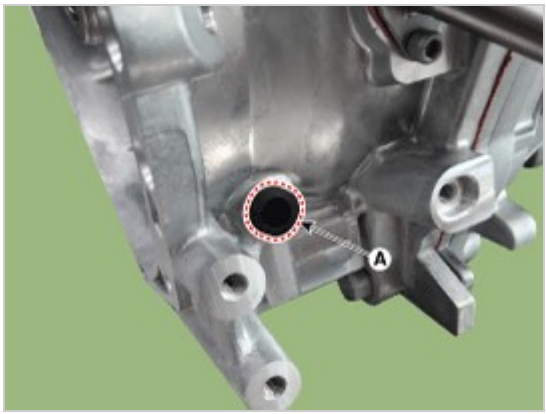

4. Remove the concentric slave cylinder (A) after loosening the bolts.

Tightening torque :
21.6 - 26.5 N.m (2.2 - 2.7 kgf.m, 15.9 - 19.5 lb-ft)

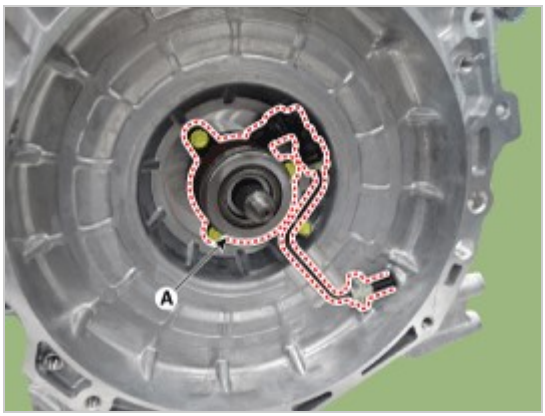

Installation

1. Install in the reverse order of removal.

NOTICE

- After tightening bolts temporarily, tighten the bolt completely at the same time with regulation torque.
- When it is assembled, it must be free from invasive foreign matters and oil leakage.
- Before installing the adapter, check the assembled state of the O-rings (A).

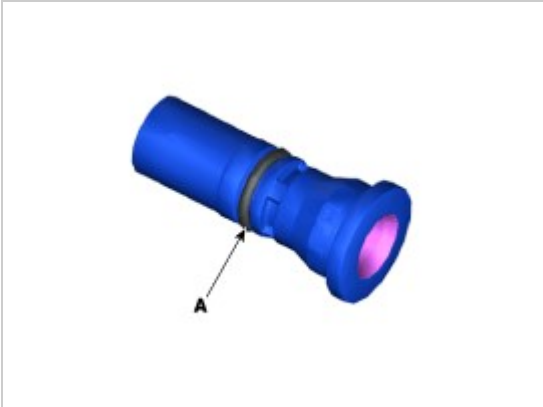

2. After replacing the Engine clutch actuator, operate the followings in order using GDS equipment.
   (1) Engine clutch inspection line learning and diagnostic information.

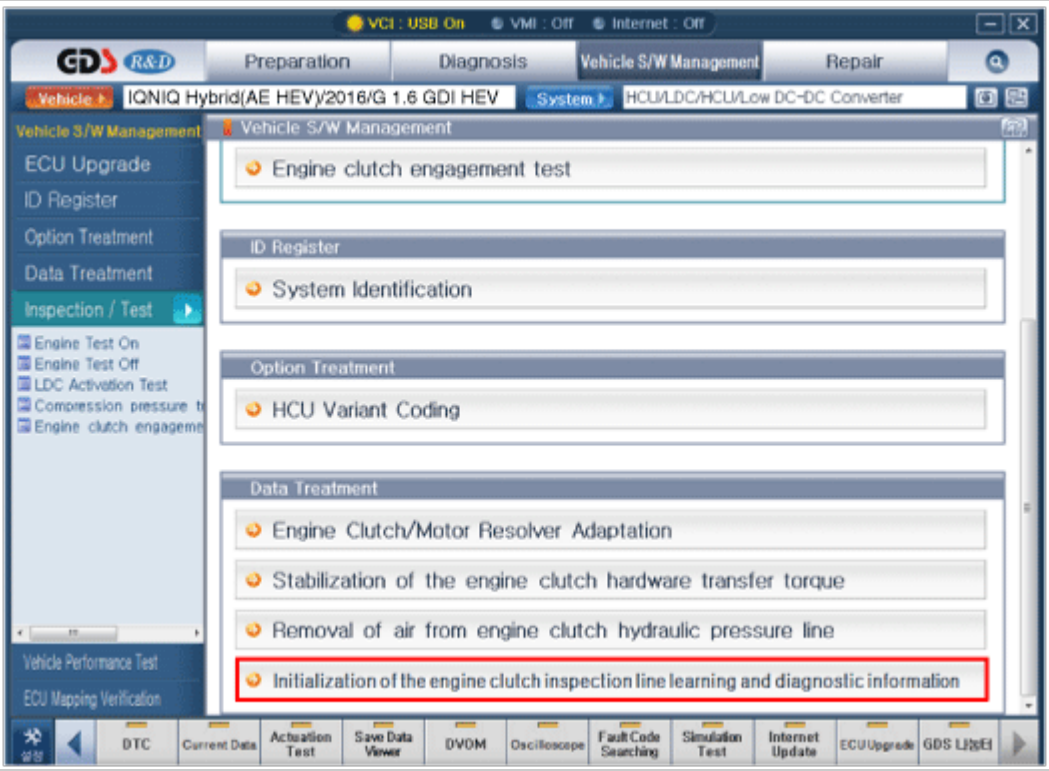

   (2) Removal of air from engine clutch hydraulic pressure line.

Information

-

When using a vacuum-pressure equipment to inject hydraulic fluid, the vacuum pressure should be no more than 2.5 torr and the injection pressure should be between 2.3 - 2.5 bars.

- If it is impossible to inject hydraulic fluid using the above condition, be sure to remove air from the hydraulic line of the engine clutch at a temperature between 0 - 40°C.

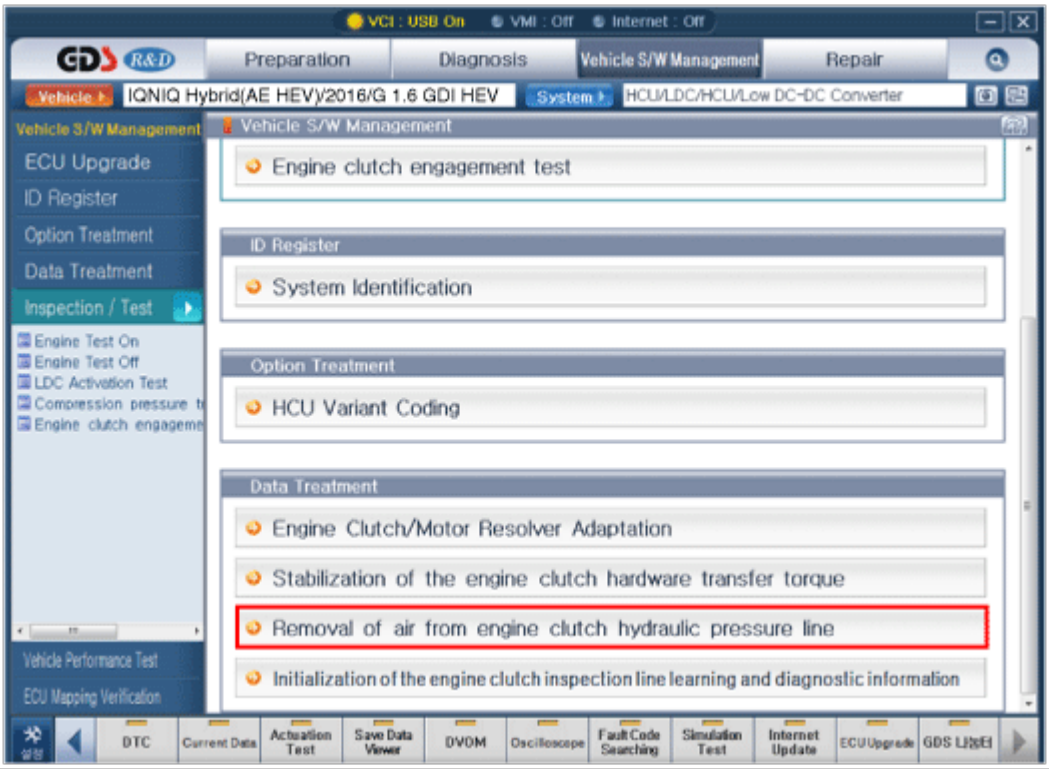

(3) Engine clutch/motor resolver adaptation.

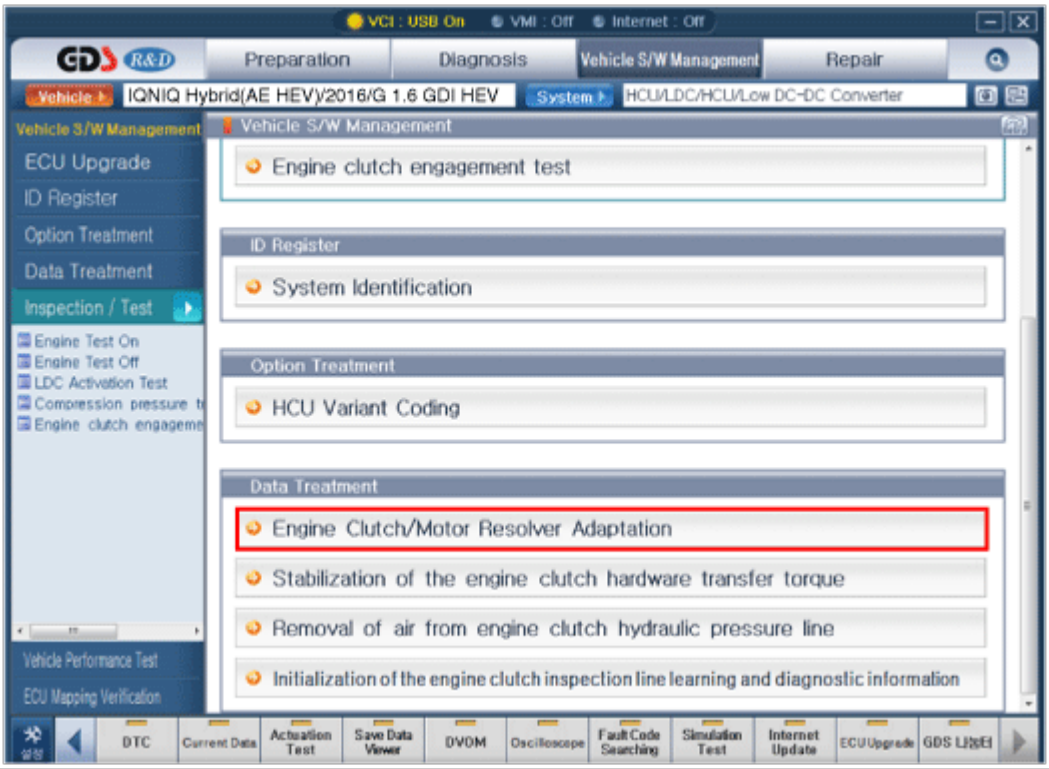

(4) Stabilization of the engine clutch hardware transfer torque.

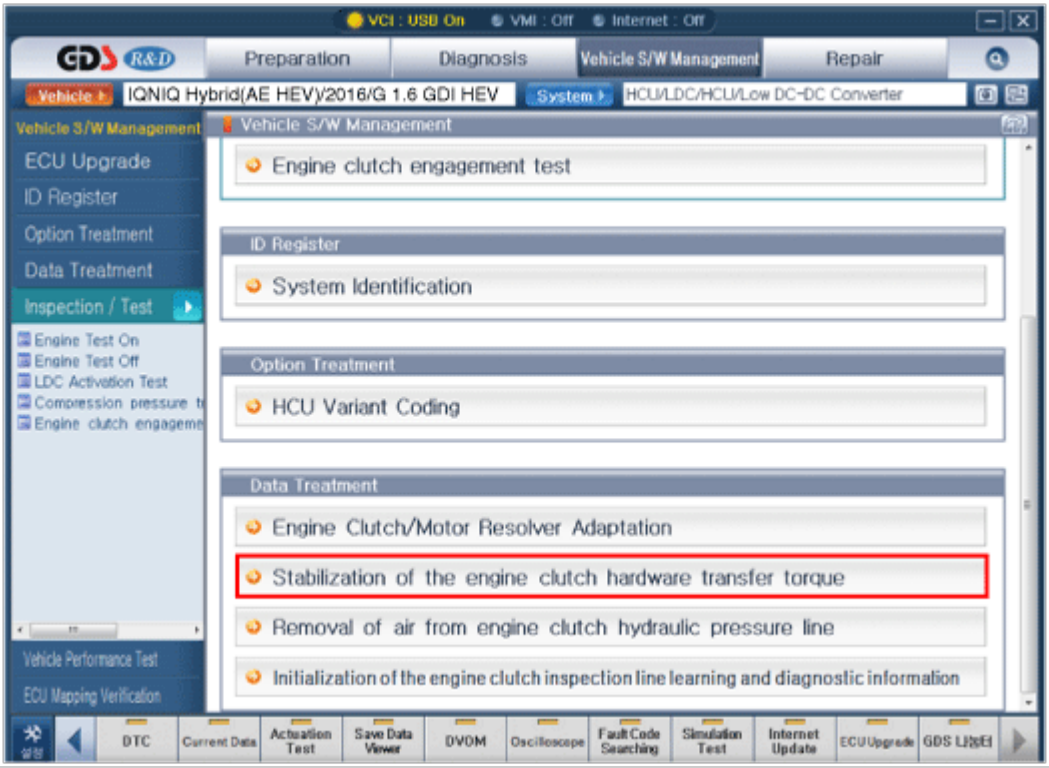

Components

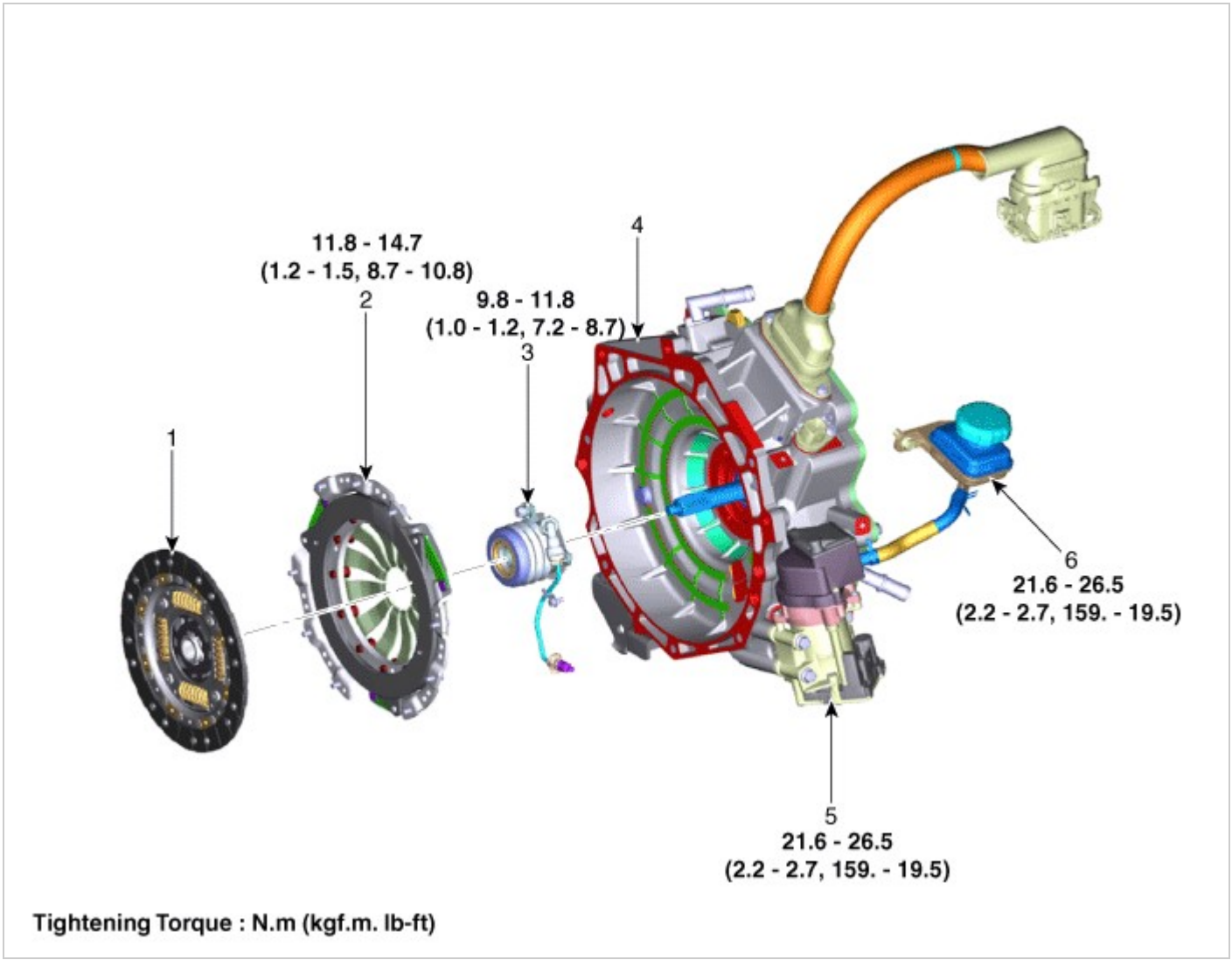

1. Clutch disc
2. Clutch cover
3. Concentric slave cylinder
4. Hybrid motor assembly
5. Engine clutch actuator
6. Reservoir

Removal

1. Remove the hybrid motor assembly.
   (Refer to Hybrid Motor System - "Hybrid Motor Assembly")
2. Remove the clutch cover assembly and clutch disc after loosening the bolts.

> **NOTICE**
> - Be careful not to be bent or twist bolts. Loosen bolts in diagonal directions.

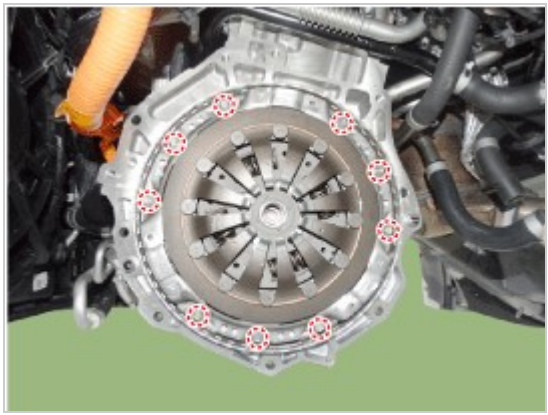

Inspection

1. Inspect diaphragm spring wear which is in contact with a concentric slave cylinder bearing.
2. Check the clutch cover and disc surface for wear or cracks.
3. Check the clutch disc lining for slipping or oil marks.
4. Measure the depth from a clutch lining surface to a rivet. If the measured value is less than the specification below, replace it.
   Clutch disc rivet depth (A):0.3 mm (0.0118 in.)

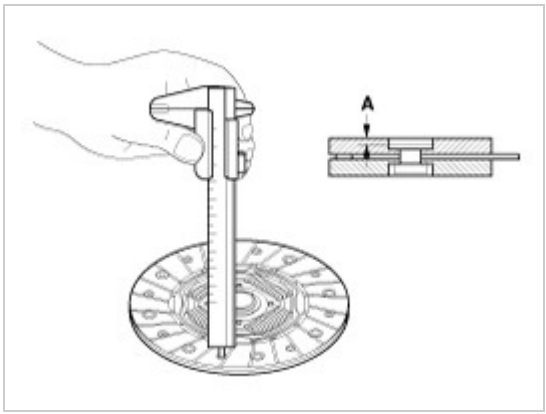

Installation

> **NOTICE**
> - If reinstalling used cover, the cover should be installed with its clutch disc as a set.
> - If you only replace a disk, the adjustment ring may malfunction, resulting in a slip due to the initial decrease of clamp load. (This is because the clutch cover is adjusted by as much as the amount of its wear.)
> - If you only replace a disk, the disk may exceed its acceptable thickness for assembly, making it difficult to block the driving force.

1. Apply grease on a disc spline part and hybrid motor input shaft spline part as required.
   Specified grease:CASMOLY L9508
   Amount:0.2 g

> **NOTICE**
> **Possible problems when not following**
> - When not applying: Excessive wear of splines and bad clutch operation can occur.
> - When excessively applying: Grease can be scattered by centrifugal force which can contaminate the clutch disc. This can cause a loss of friction force causing a slip.

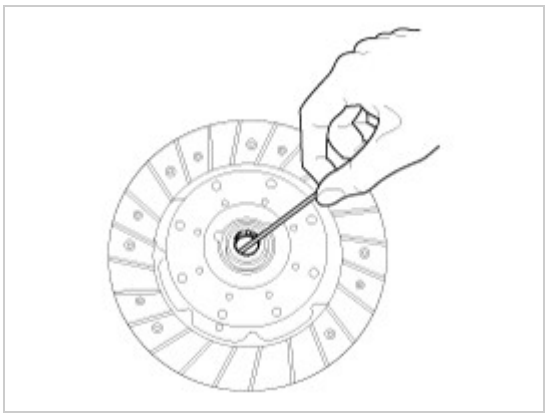

2. Install the clutch disc and the cover with SST (09411-1P000, 09411-G2100)

3. Install the clutch cover bolts. Not to be bent or twisted, Tighten them in diagonal directions.

Tightening torque :
11.8 - 14.7 N.m (1.2 - 1.5 kgf.m, 8.7 - 10.8 lb-ft)

NOTICE

- Loosely tighten every clutch cover bolts, then torque to specifications in a diagonal direction. This can prevent twisting, vibration of the cover, and the lifting of the pressure plate.
- Install the all the components with the specified torques. If not, the clutch torque transmission may have concerns or the mounting bolt can loosen.

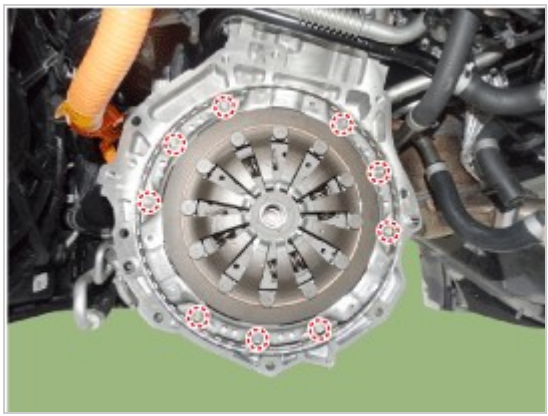

4. Install the hybrid motor assembly.
(Refer to Hybrid Motor System - "Hybrid Motor Assembly")

5. After replacing the Engine clutch actuator, operate the followings in order using GDS equipment.
(1) Engine clutch inspection line learning and diagnostic information.

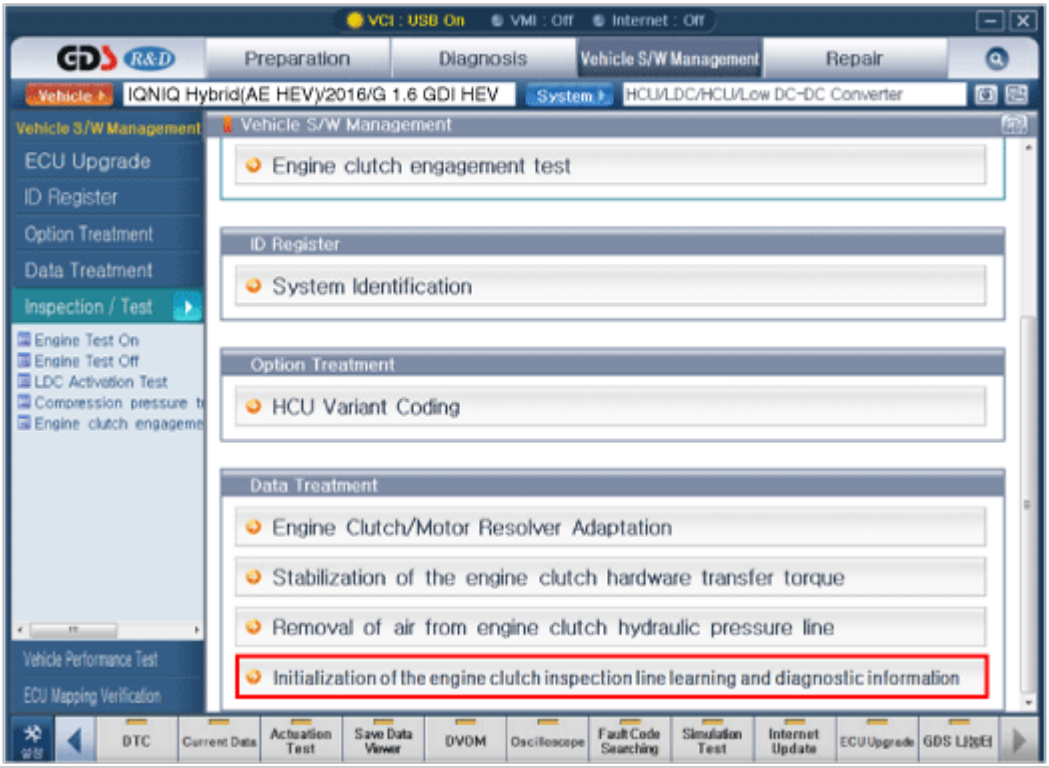

(2) Removal of air from engine clutch hydraulic pressure line.

Information

- When using a vacuum-pressure equipment to inject hydraulic fluid, the vacuum pressure should be no more than 2.5 torr and the injection pressure should be between 2.3 - 2.5 bars.
- If it is impossible to inject hydraulic fluid using the above condition, be sure to remove air from the hydraulic line of the engine clutch at a temperature between 0 - 40°C.

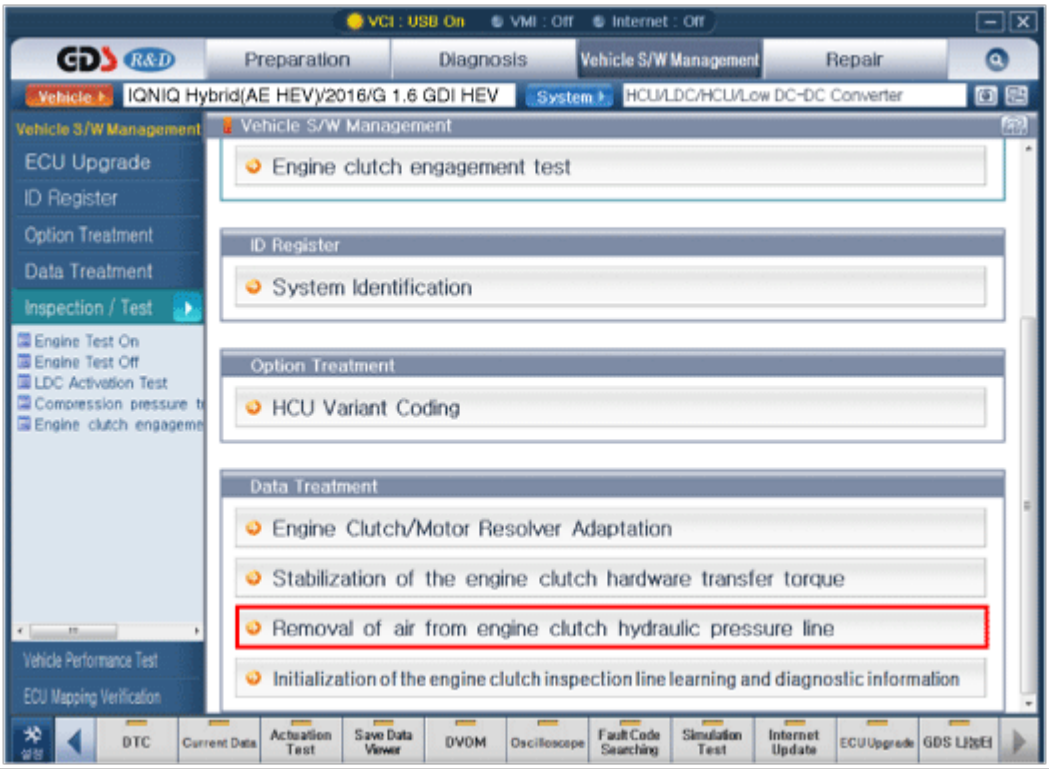

(3) Engine clutch/motor resolver adaptation.

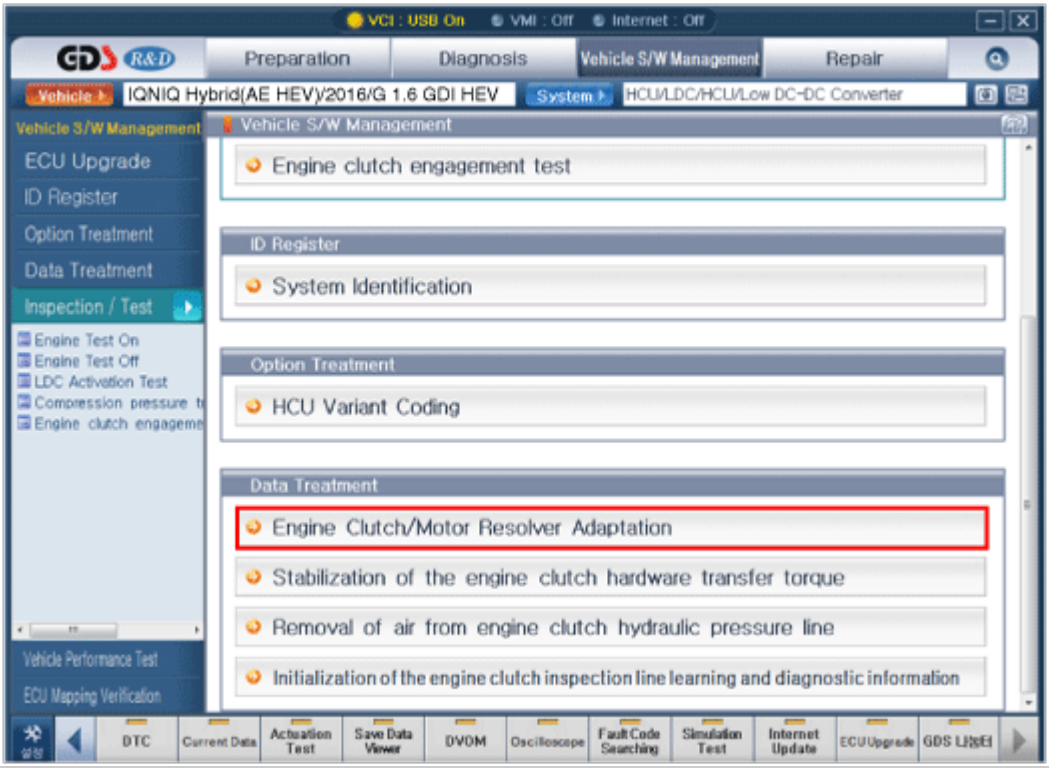

(4) Stabilization of the engine clutch hardware transfer torque.

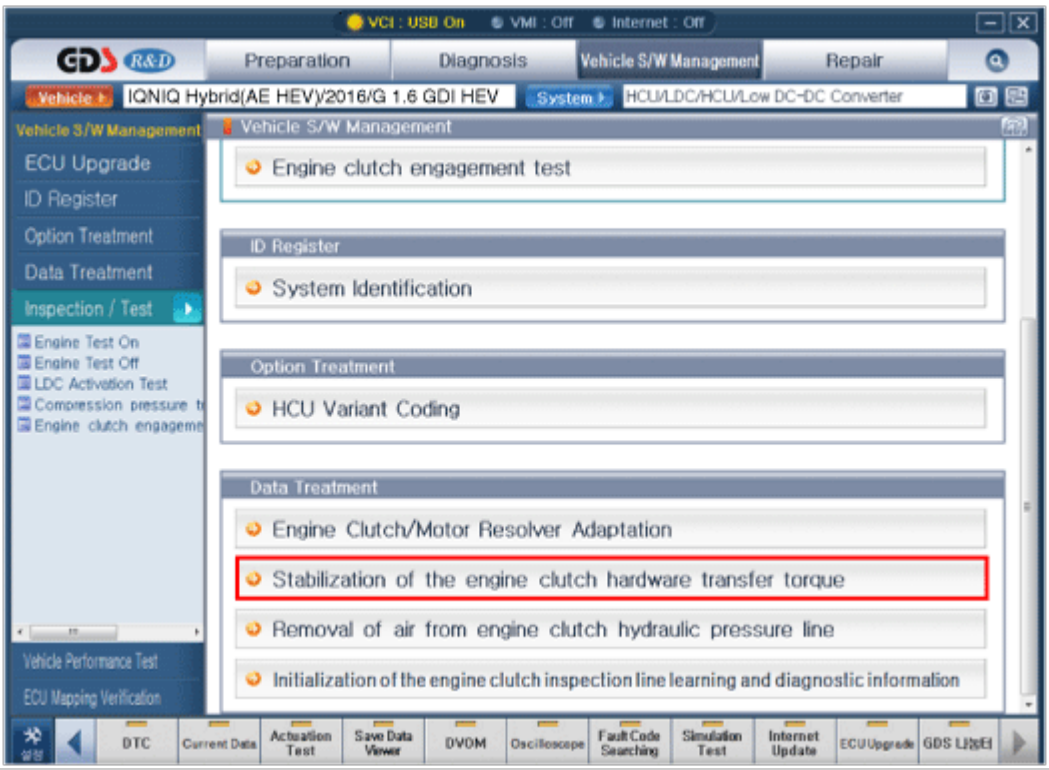

Engine Clutch System

Components

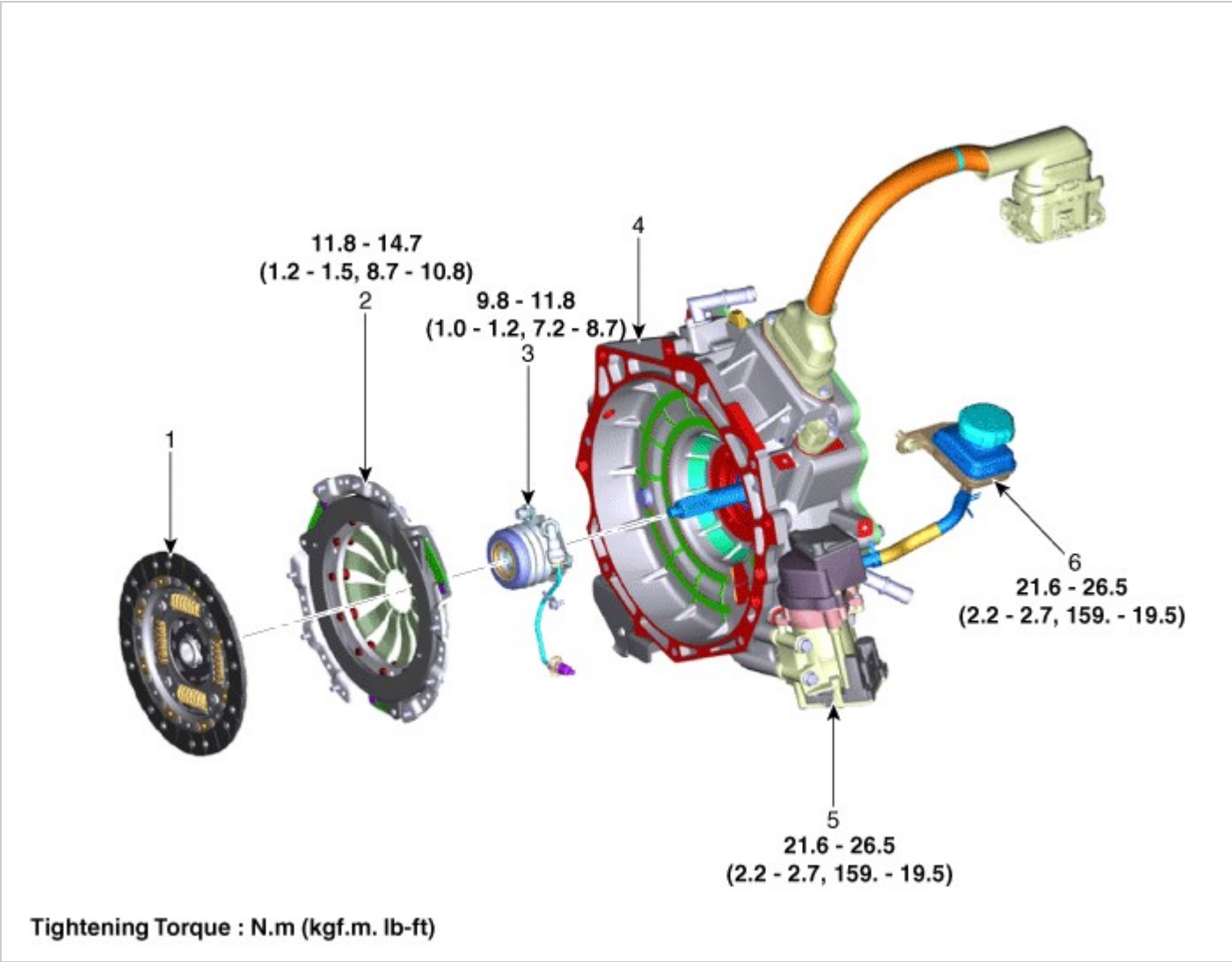

1. Clutch disc
2. Clutch cover
3. Concentric slave cylinder
4. Hybrid motor assembly
5. Engine clutch actuator
6. Reservoir

Engine Clutch System

Removal

1. Turn the ignition switch OFF and disconnect the battery (-) terminal.
2. Remove the engine room under cover.
   (Refer to Engine Mechanical System - "Engine Room Under Cover")
3. Drain the hydraulic oil from the reservoir using a syringe.

> **⚠ CAUTION**
> - Do not spill brake fluid on the vehicle, it may damage the paint; if brake fluid does contact the paint, wash it off immediately with water

4. DIsconnect the reservoir hose (A).

> **⚠ CAUTION**
> - Disconnect the reservoir hose, and then Be careful not to leak the fluid.

5. Remove the reservoir (A) after loosening the bolts.

Tightening torque :
21.6 - 26.5 N.m (2.2 - 2.7 kgf.m, 15.9 - 19.5 lb-ft)

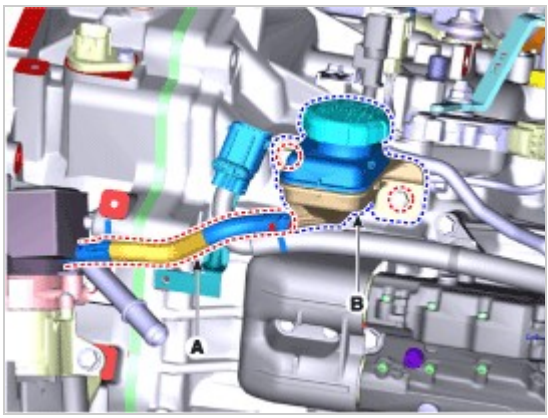

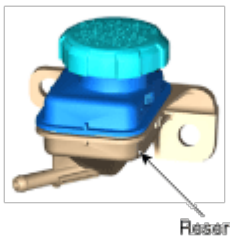

Installation

1. Install in the reverse order of removal.
2. Refill the specified lubricants in the reservoir and then perform the air bleeding using the GDS.

Specified lubricants : Brake fluid DOT 3 or DOT

Quantity :

Remove air from the hydraulic line and theninject hydraulic fluid to the reservoir so that it comes between the MAX and MIN levels of the reservoir.

(1) Engine clutch inspection line learning and diagnostic information.

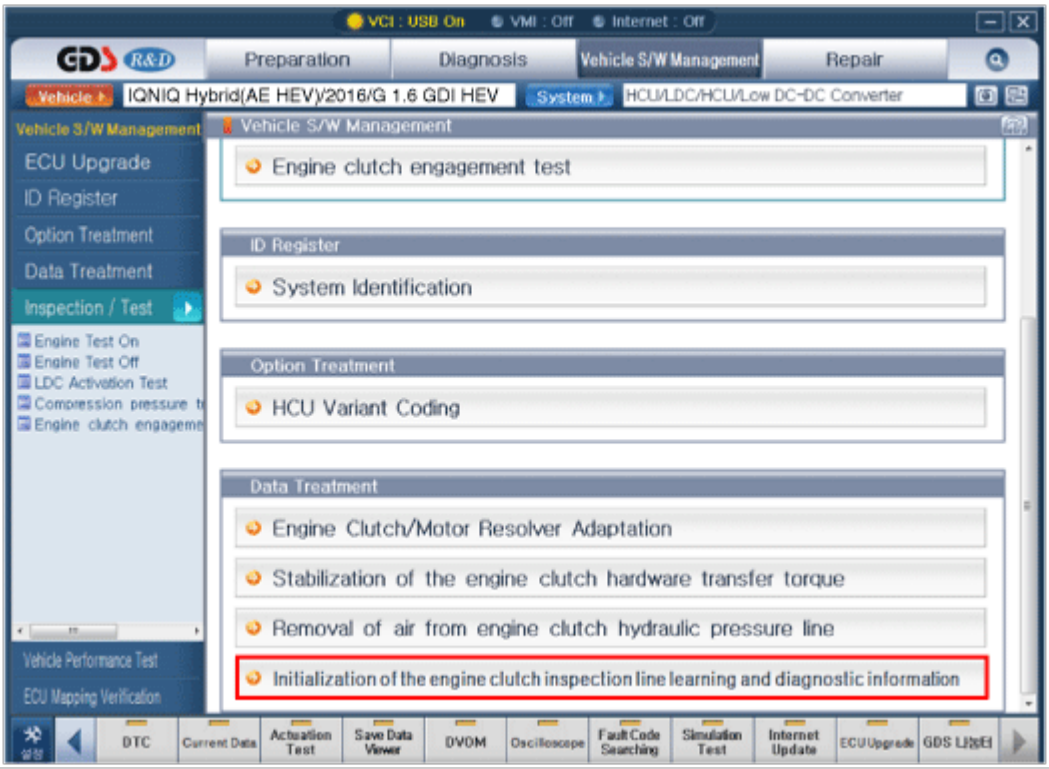

(2) Removal of air from engine clutch hydraulic pressure line.

Information

- When using a vacuum-pressure equipment to inject hydraulic fluid, the vacuum pressure should be no more than 2.5 torr and the injection pressure should be between 2.3 - 2.5 bars.
- If it is impossible to inject hydraulic fluid using the above condition, be sure to remove air from the hydraulic line of the engine clutch at a temperature between 0 - 40°C.

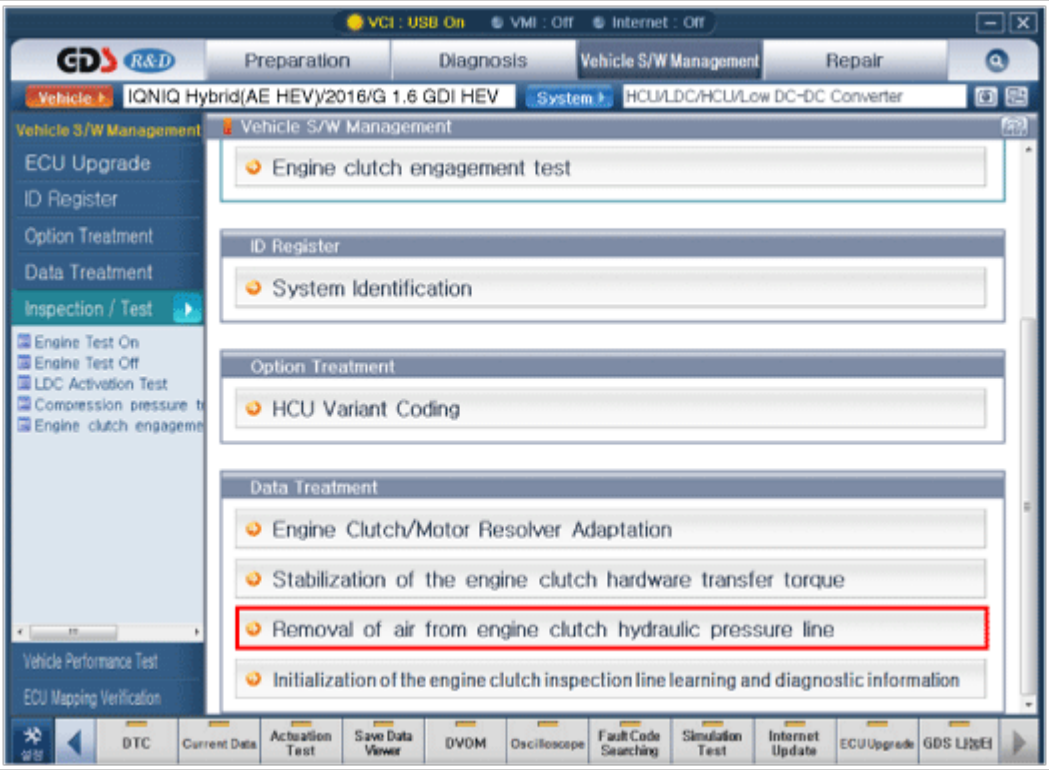

(3) Engine clutch/motor resolver adaptation.

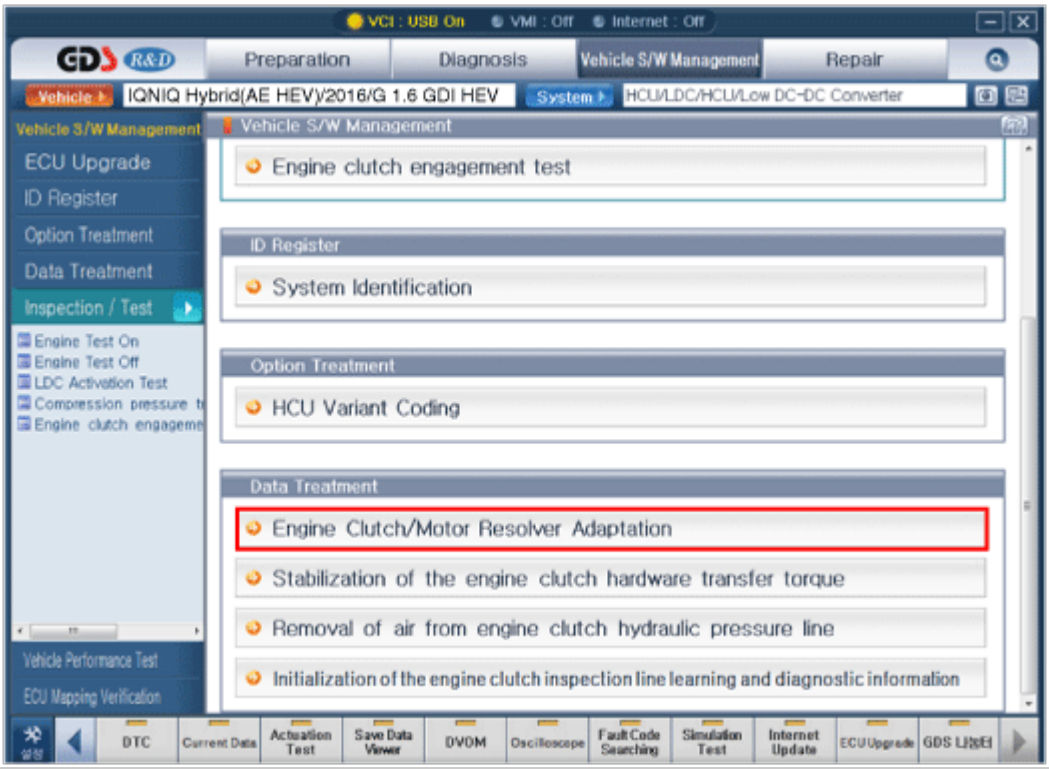

(4) Stabilization of the engine clutch hardware transfer torque.

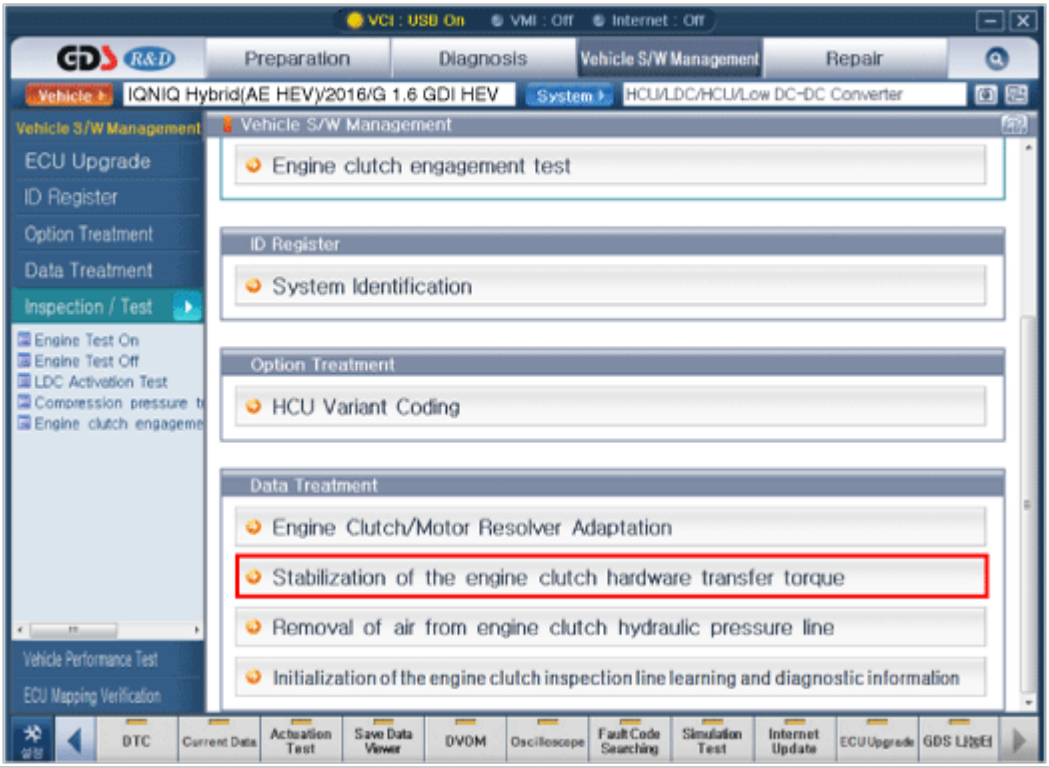

Engine Clutch System

General Information

1. Check & Change intervals

Check	Change	Capacity	Specified lubricants
15000 km / 1 years (9000 miles / 1years)	40000 km (25000 miles)	Remove air from the hydraulic line and theninject hydraulic fluid to the reservoir so that it comes between the MAX and MIN levels of the reservoir.	Brake fluid DOT 3

Engine Clutch System

Replacement

1. Turn the ignition switch OFF and disconnect the battery (-) terminal.
2. Remove the engine room under cover.
   (Refer to Engine Mechanical System - "Engine Room Under Cover")
3. Disconnect the reservoir hose (A), and then drain the hydraulic oil from the reservoir (B).

> **⚠ CAUTION**
> - Do not spill brake fluid on the vehicle, it may damage the paint; if brake fluid does contact the paint, wash it off immediately with water

4. Connect the reservoir hose (A).

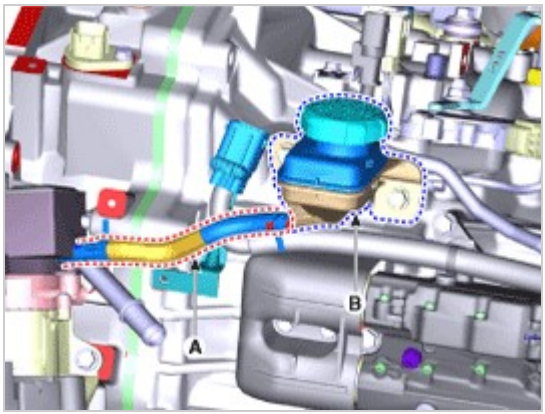

5. Refill the specified lubricants in the reservoir and then perform the air bleeding using the GDS.

Specified lubricants : Brake fluid DOT 3

Quantity :

Remove air from the hydraulic line and theninject hydraulic fluid to the reservoir so that it comes between the MAX and MIN levels of the reservoir.

(1) Engine clutch inspection line learning and diagnostic information.

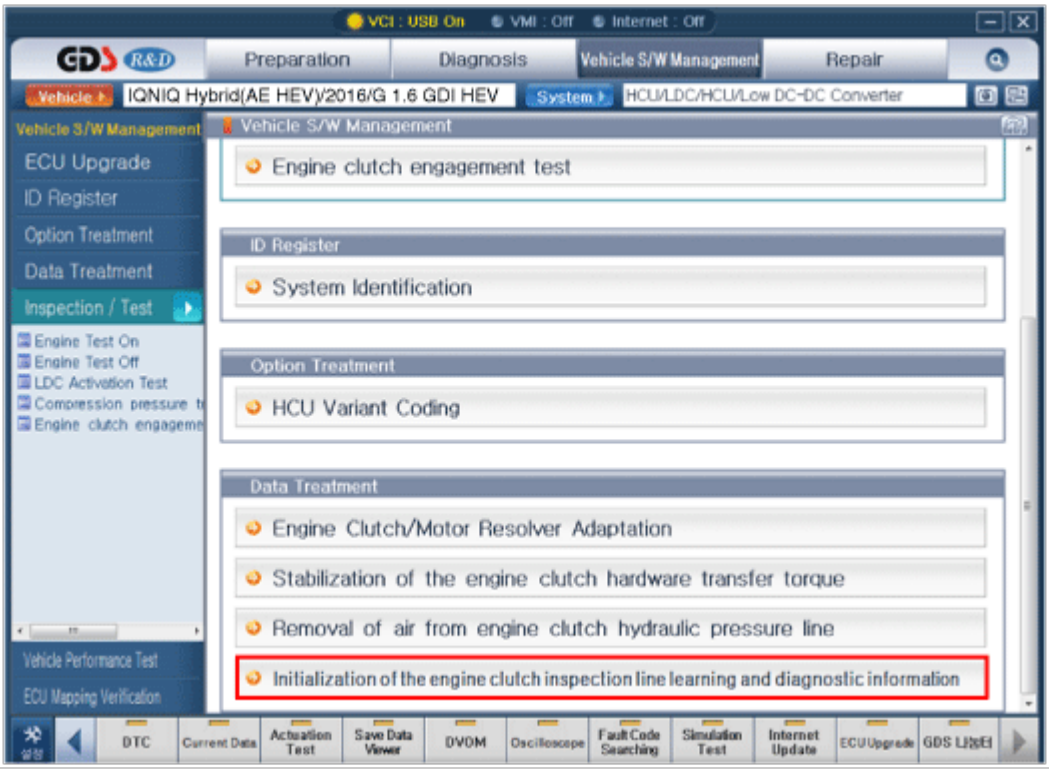

(2) Removal of air from engine clutch hydraulic pressure line.

Information

- When using a vacuum-pressure equipment to inject hydraulic fluid, the vacuum pressure should be no more than 2.5 torr (mmHg) and the injection pressure should be between 2.3 - 2.5 bars.
- If it is impossible to inject hydraulic fluid using the above condition, be sure to remove air from the hydraulic line of the engine clutch at a temperature between 0 - 40°C.

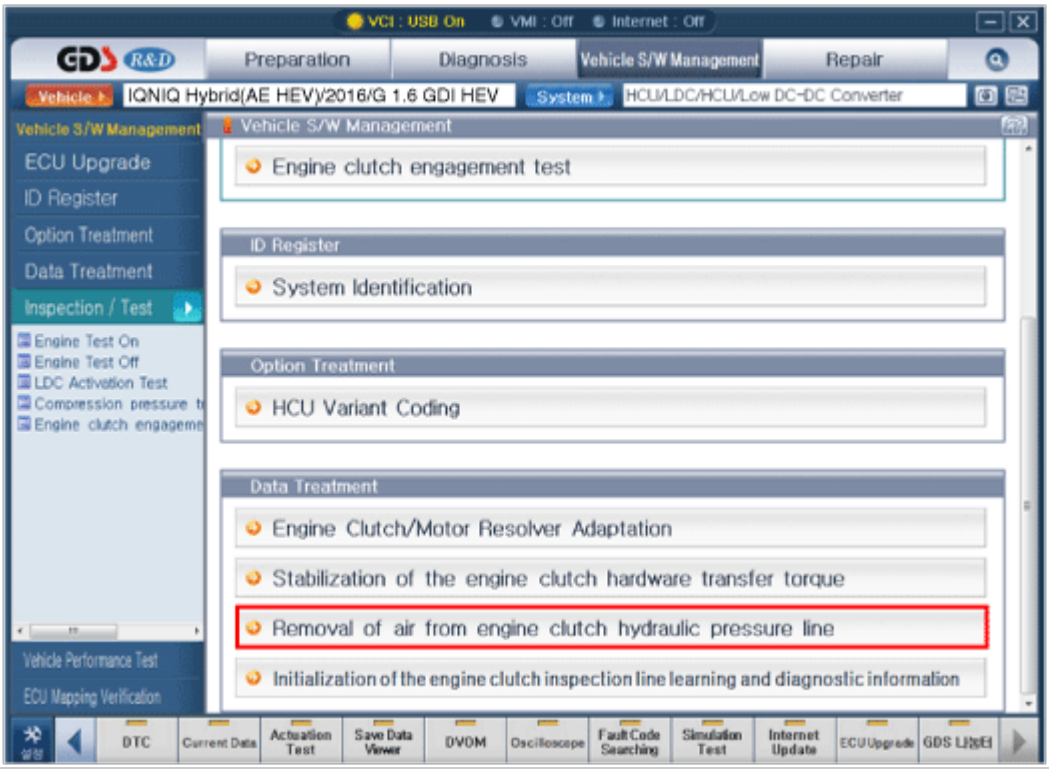

(3) Engine clutch/motor resolver adaptation.

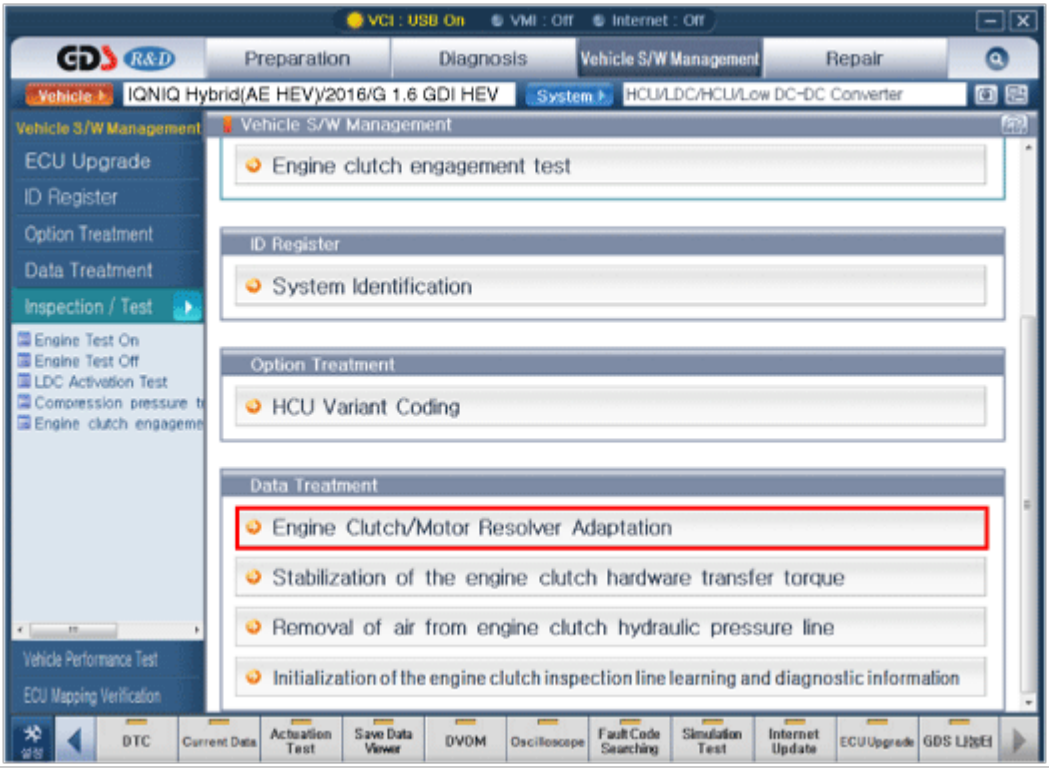
VCI : USB On
VMI : Off
Internet : Off
Preparation
Diagnosis
Vehicle S/W Management
Repair
Vehicle
IQNIQ Hybrid(AE HEV)/2016/G 1.6 GDI HEV
System
HCU/LDC/HCU/Low DC-DC Converter
Vehicle S/W Management
ECU Upgrade
ID Register
Option Treatment
Data Treatment
Inspection / Test
Engine Test On
Engine Test Off
LDC Activation Test
Compression pressure t
Engine clutch engagem
Vehicle Performance Test
ECU Mapping Verification
Vehicle S/W Management
Engine clutch engagement test
ID Register
System Identification
Option Treatment
HCU Variant Coding
Data Treatment
Engine Clutch/Motor Resolver Adaptation
Stabilization of the engine clutch hardware transfer torque
Removal of air from engine clutch hydraulic pressure line
Initialization of the engine clutch inspection line learning and diagnostic information
DTC
Current Data
Actuation Test
Save Data Viewer
DVOM
Oscilloscope
Fault Code Searching
Simulation Test
Internet Update
ECU Upgrade
GDS Utility