Safety Precaution

Precautions to take before servicing high voltage system

DANGER

- Since hybrid vehicles contain a high voltage battery, if the high voltage system or vehicles are handled incorrectly, this might lead to a serious accidents like electric shock and electric leakage.

WARNING

- Be sure to shut off the high voltage by removing the safety plug before performing inspection or repairing the high voltage system.
  (Refer to "High Voltage Shut-off Procedures")
- The responsible worker keeps the removed safety plug to prevent the plug from being connected by mistake.
- Do not keep any metal objects (watch, ring etc.) while working on the high voltage system, which it can cause serious accidents like electric shock.
- Before beginning work on the high voltage system, the worker should wear personal protective equipment to prevent safety accidents.
  (Refer to "Personal Protective Equipment")
- Never allow workers who are not wear personal protective equipment to touch the high voltage system. High voltage components should be covered with an insulation sheet to prevent safety accidents.
- Use insulation tools when working on the high voltage system.
- Put the removed high voltage components on the insulation mat.

Information

- All the high voltage wiring and connectors are orange.
- A caution label for high voltage is attached to the high voltage components.
- High voltage components :
  High Voltage Battery Pack Assembly, Power Relay Assembly (PRA), BMS ECU, Hybrid Power Control Unit (HPCU), Hybrid Drive Motor, HSG, Electric A/C Compressor, Low DC/DC Converter (LDC), Power Cable, Electric Compressor etc.

CAUTION

- Inform of danger of high voltage by putting the "high voltage caution" on the vehicle as image below.

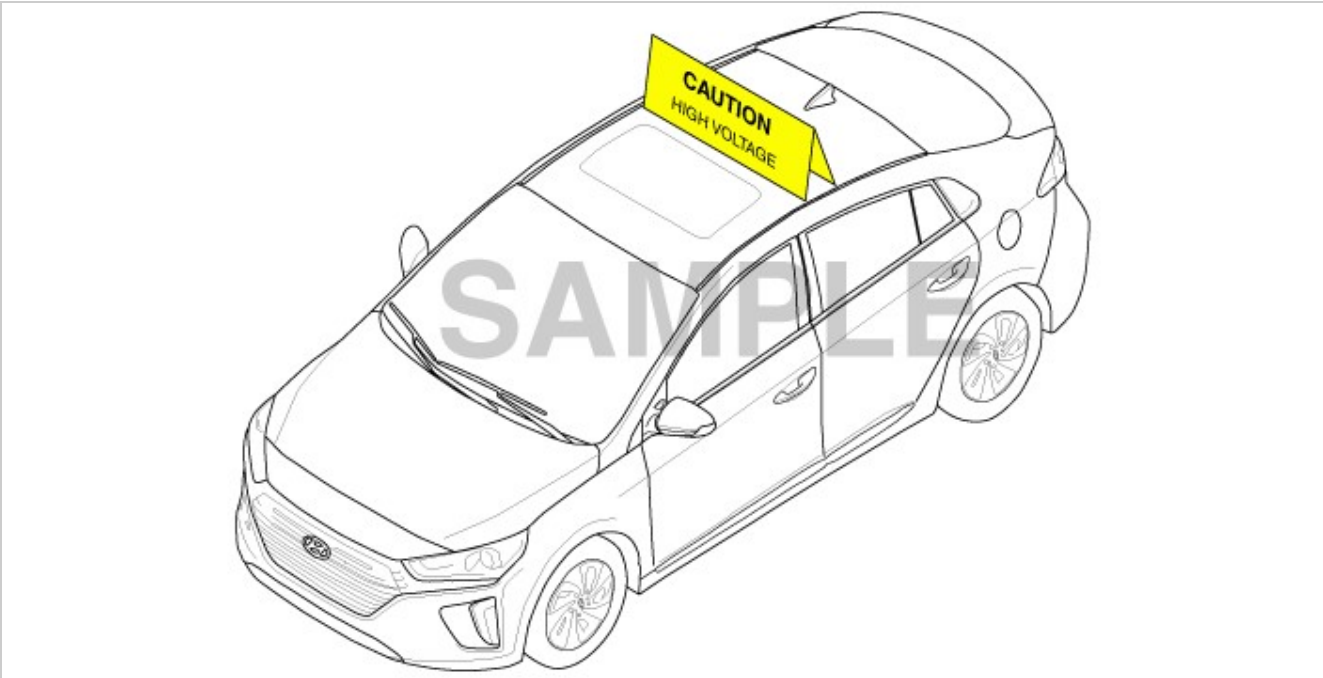

DANGER

High Voltage : Do not touch during operation.

Person in charge : _____

Copy this page and put it after folding on the roof of the vehicle in service.

DANGER

High Voltage : Do not touch during operation.

Person in charge : _____

Personal Protective Equipment

Name	Illustration	Description
Insulation glove		Used when inspecting or working on the high voltage components [Insulation performance : 1000V / 300A or above]
Insulation shoes		Used when inspecting or working on the high voltage components
Insulation clothes		

Insulation helmet	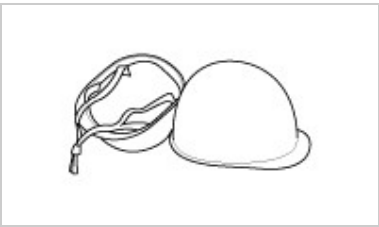	
Safety glasses		Used in the case below • During Removal & installation or inspection of the high voltage battery terminals or wiring, which spark might happen. • During working on the high voltage battery pack assembly.
Face shield		
Insulation mat	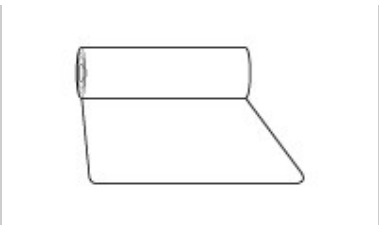	Putting the removed high voltage components on the insulation mat to prevent safety accidents.
Insulation sheet	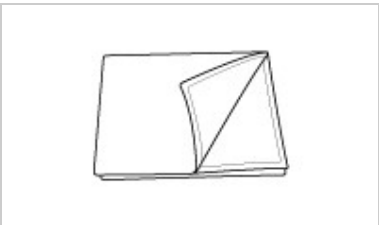	Covering the high voltage components with insulation sheet to prevent people who don’t wear the personal protective equipment from safety accidents.

Precautions to take when handling power cable

- Immediately insulate the high voltage terminal after reconnecting the terminal (use insulation tape).
- Tighten the high voltage terminal screw to spec torque.
- Be careful that (+) and (-) terminals do not come in contact when connecting or disconnecting power cable and busbar.

Precautions to take when handling high voltage battery

- When transporting high voltage battery, be sure to keep it flat and leveled. Failure to do so may decrease the battery performance and/or its life-span.
- High voltage battery''s performance may decrease if it is exposed to high temperature for a lengthy period. As a result, heat-treatment after painting must not exceed 70°C/ 30 minutes, or 80°C/ 20 minutes.

Precautions in case of fire on high voltage battery system

- If the fire occurs indoor, ventilate the area to let out hydrogen gas.
- ACB fire extinguisher is recommended for putting out the fire. (water may also be used).

Precautions in case of high voltage battery gas or electrolyte leakage

- Turn OFF the Start button. Keep the Smart Key at least 2 meters away from the vehicle to prevent unintended engine start.
- Gas is hydrogen and alkaline vapor. If the leakage is indoor, ventilate the area immediately and evacuate to a safe location.
- If the leaked liquid comes in contact with skin, immediately neutralize the affected area with boric acid solution, then clean with tap water or saline solution.

- If the leaked vapor or liquid gets in the eye, immediately clean the affected eye with water then get medical attention.
- If the gas leakage is caused by high temperature, then do NOT use the battery until the high voltage battery fully cools down to room temperature.

Precautions when handling the vehicle after an accident

- Be sure to wear insulated gloves (or rubber gloves), protective goggles, insulated suite, and insulated boots.
- Do NOT touch bare cable under any condition.
  (Refer to "Precautions when handling power cable")
- In case of vehicle fire, put out the fire with ABC extinguisher. Do NOT use water (usage of large volume of water is okay, but small volume can worsen the situation).
- If more than half of the vehicle is submerged, then do NOT go near the Safety Switch or other high voltage related components. If such a component must be accessed, then move the vehicle to the safe location first before handling the component.
- Gas is hydrogen and alkaline vapor. If the leakage is indoor, ventilate the area immediately and evacuate to a safe location.
- If the leaked liquid comes in contact with skin, immediately neutralize the affected area with boric acid solution, then clean with tap water or saline solution.
- Refer to "High voltage cut-off procedure" if the high voltage needs to be cut off.

Preparations when servicing the accident vehicle

- Be sure to wear insulated gloves (or rubber gloves), protective goggles, insulated suite, and insulated boots.
- Boric Acid Power or Solution
- ABC Extinguisher
- Towel for cleaning electrolyte
- Vinyl tape (for insulating terminal)
- Mega ohm tester (for checking high voltage)

Precautions in case HEV is left unattended for a lengthy period

- Turn OFF the Start button. Keep the Smart Key at least 2 meters away from the vehicle to prevent unintended engine start.
- We recommend that HEV is driven at least 1 time for over 30 minutes every 2 months to protect and manage the high voltage battery (inquire at relevant team in HMC).
- When inspecting or exchanging the auxiliary battery, check high voltage battery SOC reset related problems.

Hybrid Vehicle Refrigerant Recovery / Charging Precautions

- Since the electric compressor uses high-voltage, you should use POE oil which have high Volumetric Resistivity.
- Do not use the same A/C recovery / charging station as conventional belt-driven compressors.

WARNING

- If the POE oil of the system gets mixed with PAG oil, then dielectric breakdown due to decreased volumetric Resistivity can occur and inoperative A/C compressor may result, A/C compressor may not work

High Voltage Shut-off Procedures

WARNING

- Be sure to read and follow the "General Safety Information and Caution" before doing any work related with the high voltage system. Failure to follow the safety instructions may result in serious electrical injuries.
- Be sure to read and follow the "High Voltage Shut-off Procedures" before doing any work related with the high voltage system. Failure to follow the safety instructions may result in serious electrical injuries.

Information

- High voltage components :
  High Voltage Battery Pack Assembly, Power Relay Assembly (PRA), BMS ECU, Hybrid Power Control Unit (HPCU), Hybrid Drive Motor, HSG, Electric A/C Compressor, Low DC/DC Converter (LDC), Power Cable, Electric Compressor etc.

1. Turn the ignition switch OFF and disconnect the auxiliary 12V battery negative (-) terminal.
2. Remove the safety plug cover (A).

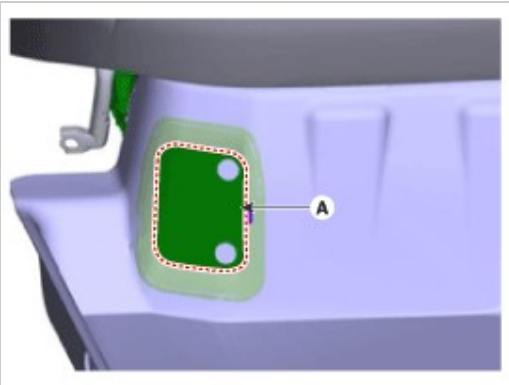

3. Unfasten the hook (A) and then remove the safety plug (C) by pulling the lever (B) to the direction of arrow.

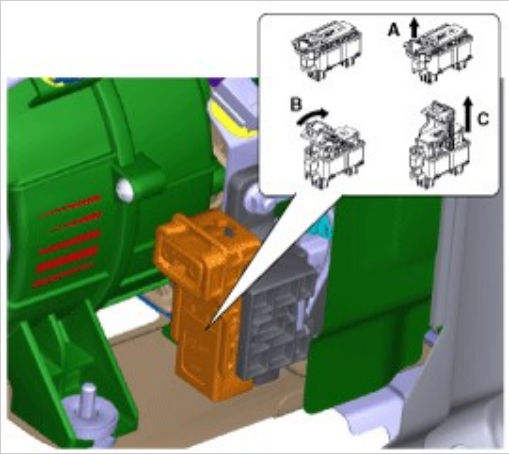

4. Wait for more than 5 minutes so that the capacitor in the high voltage system can be fully discharged.
5. Measure the voltage between the inverter terminals to check that the capacitor in the inverter is discharged completely.
   (1) Remove air cleaner assembly and air duct.
   (Refer to Engine Mechanical System - "Air Cleaner")
   (2) Disconnect the inverter power cable (A).

Information

- Disconnect the inverter power cable as the procedures below.

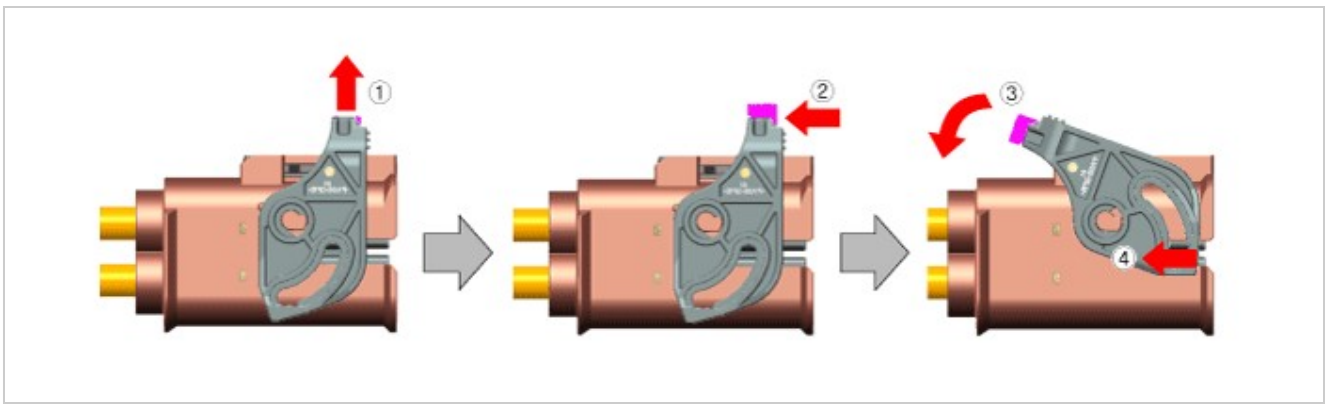

   (3) Measure the voltage between the inverter (+) terminal and the inverter (-) terminal.

Less than 30V : High voltage circuit properly shut
More than 30V : Fault on high voltage circuit

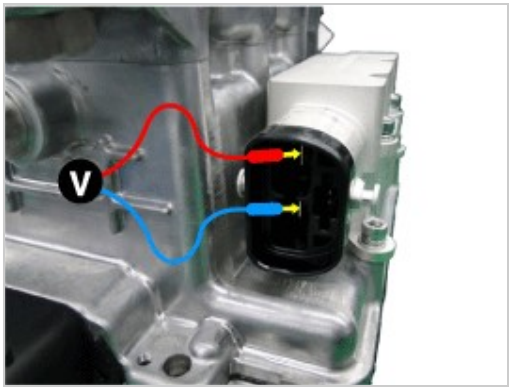

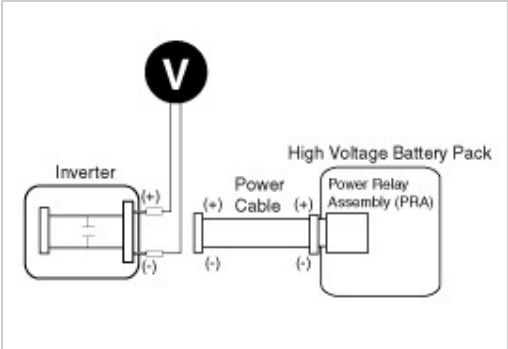

WARNING

- If measured more than 30V, check if the safety plug is removed completely.If measured more than 30V despite the safety plug is removed, there can be serious problems on the high voltage circuit. In this case, check DTC and never touch the high voltage system circuits.

Specifications

Fuel Delivery System

Items	Specification	
Fuel Tank	Capacity	45ℓ lit. (11.8 U.S.gal., 47.5 U.S.qt., 39.5 Imp.qt.)
Fuel Filter	Type	Paper type
Fuel Pressure	Low Pressure Fuel Line	480 - 519 kPa (4.9 - 5.3 kgf/cm², 69.6 - 75.3 psi)
	High Pressure Fuel Line	2 - 19.9 MPa (20.4 - 203.9 kgf/cm², 290.1 - 2900.1 psi)
Fuel Pump	Type	Electrical, in-tank type
	Driven by	Electric motor
High Pressure Fuel Pump	Type	Mechanical type
	Driven by	Camshaft

NOTICE

- The fuel filter and fuel pressure regulator are embedded in the fuel pump.

Sensors

Manifold Absolute Pressure Sensor (MAPS)

▷ Type: Piezo-resistive pressure sensor type

▷ Specification

Pressure [kPa (kgf/cm², psi)]	Output Voltage (V)
20.0 (0.20, 2.9)	0.79
46.7 (0.47, 6.77)	1.84
101.3 (1.03, 14.7)	4

Intake Air Temperature Sensor (IATS)

▷ Type: Thermistor type

▷ Specification

Temperature		Resistance (kΩ)
°C	°F	
-40	-40	40.93 - 48.35
-20	-4	13.89 - 16.03

0	32	5.38 - 6.09
10	50	3.48 - 3.90
20	68	2.31 - 2.57
40	104	1.08 - 1.21
50	122	0.76 - 0.85
60	140	0.54 - 0.62
80	176	0.29 - 0.34

Mass Air Flow Sensor (MAFS)

▷ Type: Hot-Film Type

▷ Specification

Air Flow (kg/h)	Frequency (kHz)
-40	1.49
-20	1.59
-10	1.68
-8	1.7
-6	1.72
0	1.81
6	1.93
8	1.97
10	2.01
20	2.21
40	2.52
60	2.74
90	3.05
120	3.34
140	3.53
160	3.73
250	4.62
310	5.28
370	6.03
440	7.06
560	9.46
640	11.83

Engine Coolant Temperature Sensor (ECTS)

▷ Type: Thermistor type

▷ Specification

Temperature		Resistance (kΩ)
°C	°F	
-40	-40	48.14
-20	-4	14.13 - 16.83
0	32	5.79
20	68	2.31 - 2.59
40	104	1.15
60	140	0.59
80	176	0.32

Throttle Position Sensor (TPS) [integrated into ETC module]

▷ Type: Hall IC Non-contact sensor type

▷ Specification

Throttle angle(°)	Output Voltage (V) [Vref=5V]	
	TPS1	TPS2
0	0.5	4.5
10	0.96	4.05
20	1.41	3.59
30	1.87	3.14
40	2.32	2.68
50	2.78	2.23
60	3.23	1.77
70	3.69	1.32
80	4.14	0.86
90	4.60	0.41

98	4.65	0.35
C.T (0)	0.5	4.50
W.O.T (86)	4.41	0.59

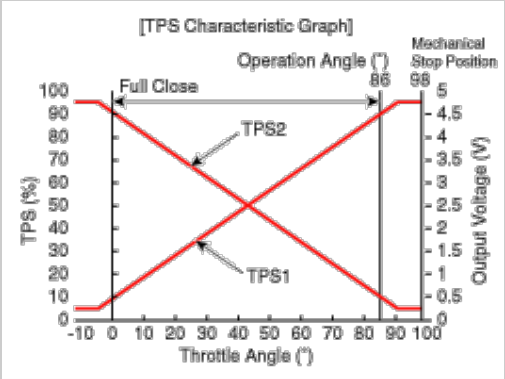

Crankshaft Position Sensor (CKPS)

▷ Type: Magnetic field sensitive Type

▷ Specification

Item	Specification
Coil Resistance (Ω)	774 - 946 [20°C (68°F)]

Camshaft Position Sensor (CMPS)

▷ Type: Hall effect type

Knock Sensor (KS)

▷ Type: Piezo-electricity type

▷ Specification

Item	Specification
Capacitance (pF)	850 - 1,150
Coil Resistance (MΩ)	1

Heated Oxygen Sensor (HO2S) [Bank 1/Sensor 1]

▷ Type: Zirconia (ZrO2) [Linear] type

▷ Specification

Item	Specification
Heater Resistance (Ω)	2.4 - 4.0 [20°C(68°F)]

Heated Oxygen Sensor (HO2S) [Bank 1/Sensor 2]

▷ Type: Zirconia (ZrO2) [Binary] type

▷ Specification

A/F Ratio (λ)	Output Voltage(V)
RICH	0.6 - 1.0
LEAN	0 - 0.4

Item	Specification
Heater Resistance (Ω)	Approx. 9.0 [20°C(68°F)]

Rail Pressure Sensor (RPS)

▷ Type: Piezo-electricity type

▷ Specification

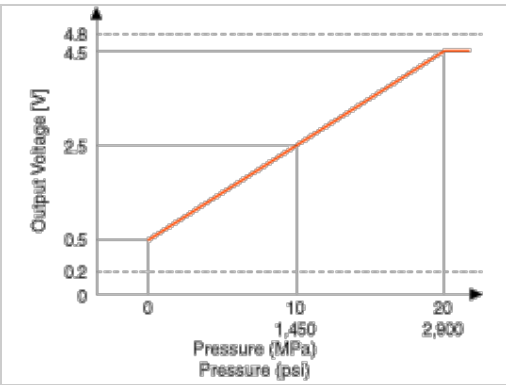

Accelerator Position Sensor (APS)

▷ Type: Variable resistor type

▷ Specification

Accelerator Position	Output Voltage (V)	
	APS1	APS2
C.T	0.7 - 0.8	0.325 - 0.425
W.O.T	3.98 - 4.22	1.98 - 2.13

Fuel Tank Pressure Sensor (FTPS)

▷ Type: Piezo - Resistivity type

▷ Specification

Pressure [kPa (kgf/cm², in H2O)	Output Voltage (V)
-6.67 (-0.068, -26.8)	0.5
0	2.5
+6.67 (0.068, 26.8)	4.5

Actuators

Injector

▷ Specification

Item	Specification
Coil Resistance (Ω)	1.425 - 1.575 [20°C(68°F)]

ETC Motor [integrated into ETC Module]

▷ Specification

Item	Specification
Coil Resistance (Ω)	0.3 - 100 [20°C(68°F)]

Purge Control Solenoid Valve (PCSV)

▷ Specification

Item	Specification
Coil Resistance (Ω)	22.0 - 26.0 [20°C(68°F)]

CVVT Oil Control Solenoid (OCS) [Intake]

▷ Specification

Item	Specification
Coil Resistance (Ω)	5.8 - 6.8 [20°C(68°F)]

CVVT Oil Control Valve (OCV) [Exhaust]

▷ Specification

Item	Specification
Coil Resistance (Ω)	6.9 - 7.9 [20°C(68°F)]

Ignition Coil

▷ Type: Stick type

▷ Specification

Item	Specification
Coil Resistance (Ω)	0.56 ± 10%[20°C(68°F)]

Fuel Pressure Control Valve

▷ Specification

Item	Specification
Coil Resistance (Ω)	0.49 ± 5%[20°C(68°F)]

Canister Close Valve (CCV)

▷ Specification

Item	Specification
Coil Resistance (Ω)	15.5 - 18.5 [20°C(68°F)]

Service Standard

Item		Specification	
Ignition Timing (°)		BTDC 0 ± 10	
Idle Speed (rpm)	A/C OFF	Neutral, N, P-range	630 ± 100
		D-range	630 ± 100
	A/C ON	Neutral, N, P-range	700 ± 100
		D, R-range	680 ± 100

Tightening Torques

Engine Control System

Item	kgf.m	N.m	lb-ft
ECM installation bolt	1.0 - 1.2	9.8 - 11.8	7.2 - 8.7
ECM bracket installation bolt/nut	1.0 - 1.2	9.8 - 11.8	7.2 - 8.7
Mass air flow sensor clamp installation bolts	0.3 - 0.5	2.9 - 4.9	2.2 - 3.6
Mass air flow sensor installation bolts	0.3 - 0.5	2.9 - 4.9	2.2 - 3.6
Manifold absolute pressure sensor installation bolt	1.0 - 1.2	9.8 - 11.8	7.2 - 8.7
Engine Coolant Temperature Sensor installation	3.0 - 4.0	29.4 - 39.2	21.7 - 28.9
Crankshaft position sensor installation bolt	1.0 - 1.2	9.8 - 11.8	7.2 - 8.7
Camshaft position sensor (Bank 1 / Intake) installation bolt	0.8 - 1.2	7.8 - 11.8	5.8 - 8.7
Camshaft position sensor (Bank 1 / Exhaust) installation bolt	0.8 - 1.2	7.8 - 11.8	5.8 - 8.7
Knock sensor installation bolt	1.9 - 2.4	18.6 - 23.5	13.7 - 17.4
Heated oxygen sensor (Bank 1 / sensor 1) installation	4.0 - 5.0	39.2 - 49.1	28.9 - 36.2
Heated oxygen sensor (Bank 1 / sensor 2) installation	4.0 - 5.0	39.2 - 49.1	28.9 - 36.2
Rail pressure sensor installation	3.0 - 3.5	30.0 - 34.3	22.1 - 25.3
Electronic throttle body installation bolt	0.8 - 1.0	7.8 - 9.8	5.8 - 7.2
Purge Control Solenoid Valve barcket installation bolt	1.0 - 1.2	9.8 - 11.8	7.2 - 8.7
CVVT oil control solenoid (Bank 1 / Intake) installation bolt	1.0 - 1.2	9.8 - 11.8	7.2 - 8.7
CVVT oil control valve (Bank 1 / Exhaust) installation bolt	1.0 - 1.2	9.8 - 11.8	7.2 - 8.7
Ignition coil installation bolt	1.0 - 1.2	9.8 - 11.8	7.2 - 8.7

Fuel Delivery System

Item	kgf.m	N.m	lb-ft
Fuel tank installation nut	4.0 - 5.5	39.2 - 54.0	28.9 - 39.8
Filler-neck assembly bracket installation nut	0.8 - 1.2	7.8 - 11.8	5.8 - 8.7
Filler-neck assembly bracket installation screw	0.8 - 1.2	7.8 - 11.8	5.8 - 8.7
Accelerator pedal module installation nut	1.3 - 1.6	12.8 - 15.7	9.4 - 11.6
Accelerator pedal module installation bolt	0.9 - 1.4	8.8 - 13.7	6.5 - 10.1
Delivery pipe installation bolt	1.9 - 2.4	18.6 - 23.5	13.7 - 17.4
High pressure fuel pump function bolck installation bolt	1.0 - 1.2	9.8 - 11.8	7.2 - 8.7
High pressure fuel pump installation bolt	1.3 - 1.5	12.8 - 14.7	9.4 - 10.9
High pressure fuel pipe installation nut	2.7 - 3.3	26.5 - 32.4	19.5 - 23.9

Special Service Tools

Item	Illustration	Application
Fuel Pressure Gauge (09353-24100)		Measuring the fuel line pressure
Fuel Pressure Gauge Adapter (09353-02100)	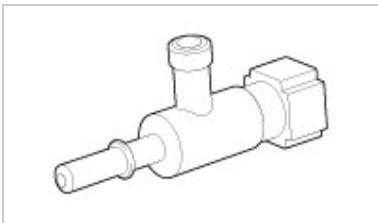	Connection between the high pressure fuel pump and the fuel feed line
Heated Oxygen Sensor Socket Wrench (09392-1Y100)	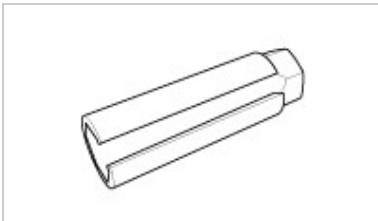	Removal and installation of the heated oxygen sensor ※ SST No.09392-2H100 model also can be used for removing the Heated Oxygen Sensor.
		Removal and installation of the high pressure fuel pipe

Torque Wrench Socket (09314-3Q100) or (09314-27130) (19mm)	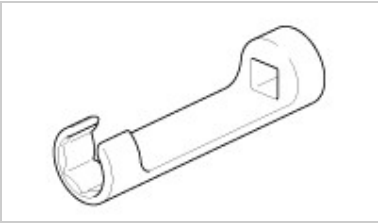	
Injector Combustion Seal Guide & Sizing tool (09353-2B000)		Installation of the injector combustion seal
Fuel Pump Plate Cover Wrench 09310-B8100		Removing and installation fuel pump plate cover

Basic Troubleshooting

Basic Troubleshooting Guide

1	Bring Vehicle to Workshop

2	Analyze Customer's Problem

- Ask the customer about the conditions and environment relative to the issue.
  (Use CUSTOMER PROBLEM ANALYSIS SHEET).

3	Verify Symptom, and then Check DTC and Freeze Frame Data

- Connect the GDS to Diagnostic Link Connector (DLC).
- Record the DTC and Freeze Frame Data.

Information

To erase DTC and Freeze Frame Data, refer to Step 5.

4	Confirm the Inspection Procedure for the System or Part

- Using the SYMPTOM TROUBLESHOOTING GUIDE CHART, choose the correct inspection procedure for the system or part to be checked.

5	Erase the DTC and Freeze Frame Data

NOTICE

NEVER erase DTC and Freeze Frame Data before completing Step 2 : MIL/DTC in CUSTOMER PROBLEM ANALYSIS SHEET.

6	Inspect Vehicle Visually

- Go to Step 11, if you recognize the problem.

7	Recreate (Simulate) Symptoms of the DTC

- Try to recreate or simulate the symptoms and conditions of the malfunction as described by customer.
- If DTC(s) is/are displayed, simulate the condition according to troubleshooting procedure for the DTC.

8	Confirm Symptoms of Problem

- If DTC(s) is/are not displayed, go to Step 9.
- If DTC(s) is/are displayed, go to Step 11.

9	Recreate (Simulate) Symptom

- Try to recreate or simulate the condition of the malfunction as described by the customer.

10	Check the DTC

- If DTC(s) does(do) not occur, refer to INTERMITTENT PROBLEM PROCEDURE in BASIC INSPECTION PROCEDURE.
- If DTC(s) occur(s), go to Step 11.

11	Perform Troubleshooting Procedure for DTC

12	Adjust or repair the vehicle

13	Confirmation test

14	END

Customer Problem Analysis Sheet

1. VEHICLE INFORMAITON

VIN No.		Transmission	☐ M/T ☐ A/T ☐ CVT ☐ etc.
Production date		Driving type	☐ 2WD (FF) ☐ 2WD (FR) ☐ 4WD
Odometer Reading	_____km/mile	DPF (Diesel Engine)	☐ With DPF ☐ Without DPF

2. SYMPTOMS

☐ Unable to start	☐ Engine does not turn over ☐ Incomplete combustion ☐ Initial combustion does not occur
☐ Difficult to start	☐ Engine turns over slowly ☐ Other_____
☐ Poor idling	☐ Rough idling ☐ Incorrect idling ☐ Unstable idling (High:_____ rpm, Low:_____rpm) ☐ Other
☐ Engine stall	☐ Soon after starting ☐ After accelerator pedal depressed ☐ After accelerator pedal released ☐ During A/C ON ☐ Shifting from N to D-range ☐ Other_____
☐ Others	☐ Poor driving (Surge) ☐ Knocking ☐ Poor fuel economy ☐ Back fire ☐ After fire ☐ Other_____

3. ENVIRONMENT

Problem frequency	☐ Constant ☐ Sometimes (_____) ☐ Once only ☐ Other_____
Weather	☐ Fine ☐ Cloudy ☐ Rainy ☐ Snowy ☐ Other_____
Outdoor temperature	Approx. _____ °C/°F
Place	☐ Highway ☐ Suburbs ☐ Inner City ☐ Uphill ☐ Downhill ☐ Rough road ☐ Other_____
Engine temperature	☐ Cold ☐ Warming up ☐ After warming up ☐ Any temperature
Engine operation	☐ Starting ☐ Just after starting (_____min) ☐ Idling ☐ Racing ☐ Driving ☐ Constant speed ☐ Acceleration ☐ Deceleration ☐ A/C switch ON/OFF ☐ Other_____

4. MIL/DTC

MIL (Malfunction Indicator Lamp)		☐ Remains ON ☐ Sometimes lights up ☐ Does not light
DTC	Normal check (Pre-check)	☐ Normal ☐ DTC (_____) ☐ Freeze Frame Data
	Check mode	☐ Normal ☐ DTC (_____) ☐ Freeze Frame Data

5. ECM/PCM INFORMATION

ECM/PCM Part No.	
ROM ID	

Basic Inspection Procedure

Measuring Condition of Electronic Parts'' Resistance

The measured resistance at high temperature after vehicle running may be high or low. So all resistance must be measured at ambient temperature (20°C, 68°F), unless stated otherwise.

NOTICE

- The measured resistance in except for ambient temperature (20°C, 68°F) is reference value.

Intermittent Problem Inspection Procedure

Sometimes the most difficult case in troubleshooting is when a problem symptom occurs but does not occur again during testing. An example would be if a problem appears only when the vehicle is cold but has not appeared when warm. In this case, the technician should thoroughly make out a "Customer Problem Analysis Sheet" and recreate (simulate) the environment and condition which occurred when the vehicle was having the issue.

1. Clear Diagnostic Trouble Code (DTC).
2. Inspect connector connection, and check terminal for poor connections, loose wires, bent, broken or corroded pins, and then verify that the connectors are always securely fastened.

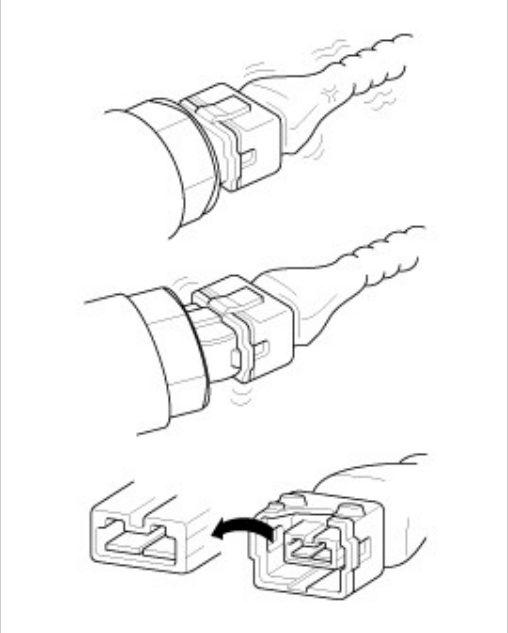

3. Slightly shake the connector and wiring harness vertically and horizontally.
4. Repair or replace the component that has a problem.
5. Verify that the problem has disappeared with the road test.

● Simulating Vibration

a. Sensors and Actuators
: Slightly vibrate sensors, actuators or relays with finger.

> **WARNING**
> • Strong vibration may break sensors, actuators or relays

b. Connectors and Harness
: Lightly shake the connector and wiring harness vertically and then horizontally.

● Simulating Heat

a. Heat components suspected of causing the malfunction with a hair dryer or other heat source.

> **WARNING**
> • DO NOT heat components to the point where they may be damaged.
> • DO NOT heat the ECM directly.

● Simulating Water Sprinkling

a. Sprinkle water onto vehicle to simulate a rainy day or a high humidity condition.

> **WARNING**
> • DO NOT sprinkle water directly into the engine compartment or electronic components.

● Simulating Electrical Load

a. Turn on all electrical systems to simulate excessive electrical loads (Radios, fans, lights, rear window defogger, etc.).

Connector Inspection Procedure

1. Handling of Connector
   a. Never pull on the wiring harness when disconnecting connectors.

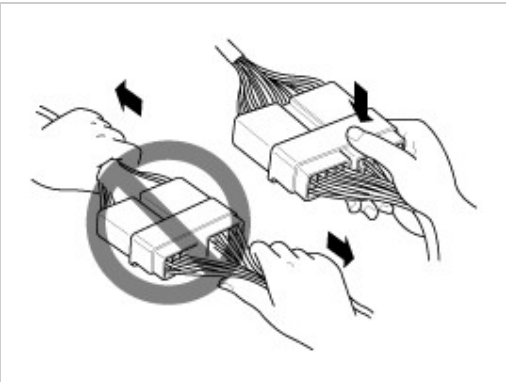

   b. When removing the connector with a lock, press or pull locking lever.

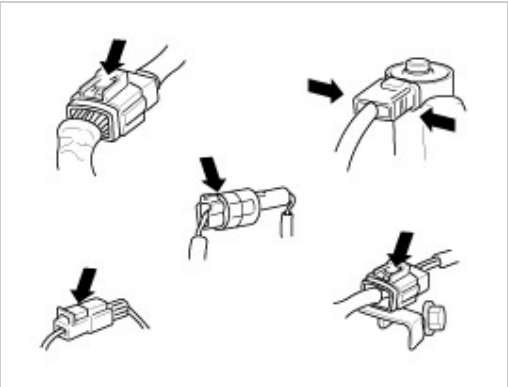

c. Listen for a click when locking connectors. This sound indicates that they are securely locked.

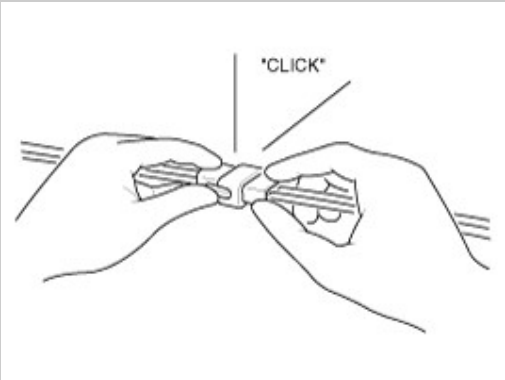

d. When a tester is used to check for continuity, or to measure voltage, always insert tester probe from wire harness side.

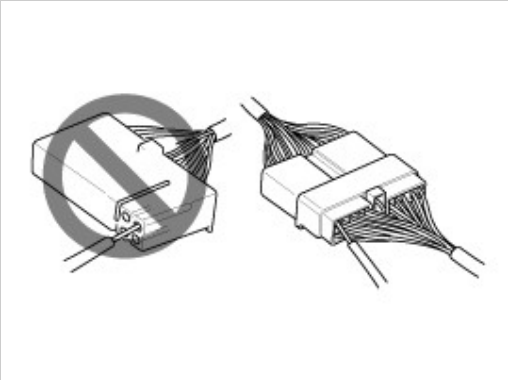

e. Check waterproof connector terminals from the connector side. Waterproof connectors cannot be accessed from harness side.

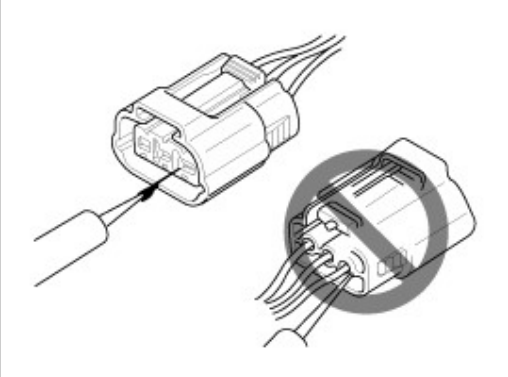

NOTICE

- Use a fine wire to prevent damage to the terminal.
- Do not damage the terminal when inserting the tester lead.

2. Checking Point for Connector
   a. While the connector is connected:
   Hold the connector, check connecting condition and locking efficiency.
   b. When the connector is disconnected:
   Check missed terminal, crimped terminal or broken core wire by slightly pulling the wire harness.
   Visually check for rust, contamination, deformation and bend.
   c. Check terminal tightening condition:
   Insert a spare male terminal into a female terminal, and then check terminal tightening conditions.
   d. Pull lightly on individual wires to ensure that each wire is secured in the terminal.

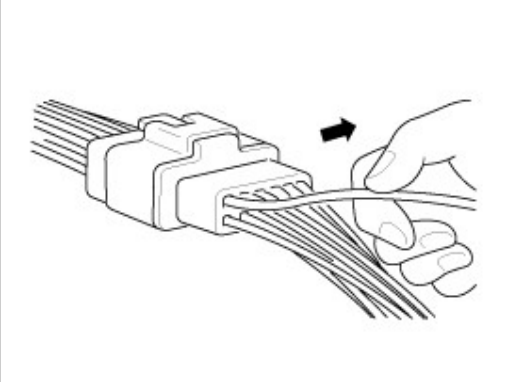

3. Repair Method of Connector Terminal
   a. Clean the contact points using air gun and/or shop rag.

   NOTICE
   - Never use sand paper when polishing the contact points, otherwise the contact point may be damaged.

   b. In case of abnormal contact pressure, replace the female terminal.

Wire Harness Inspection Procedure

1. Before removing the wire harness, check the wire harness position and crimping in order to restore it correctly.
2. Check whether the wire harness is twisted, pulled or loosened.
3. Check whether the temperature of the wire harness is abnormally high.
4. Check whether the wire harness is rotating, moving or vibrating against the sharp edge of a part.
5. Check the connection between the wire harness and any installed part.
6. If the covering of wire harness is damaged; secure, repair or replace the harness.

Electrical Circuit Inspection Procedure

● Check Open Circuit

1. Procedures for Open Circuit
   - Continuity Check
   - Voltage Check

   If an open circuit occurs (as seen in [FIG. 1]), it can be found by performing Step 2 (Continuity Check Method) or Step 3 (Voltage Check Method) as shown below.

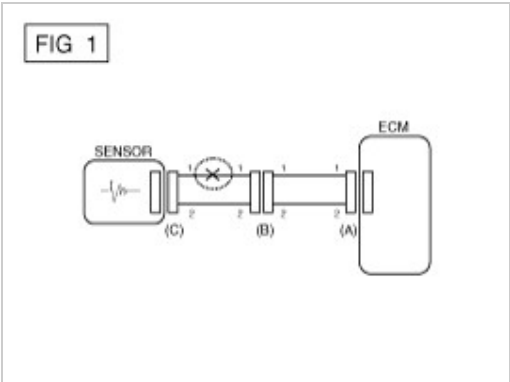

2. Continuity Check Method

   NOTICE
   - When measuring for resistance, lightly shake the wire harness above and below or from side to side.

   Specification (Resistance)
   1Ω or less → Normal Circuit
   1MΩ or Higher → Open Circuit

   a. Disconnect connectors (A), (C) and measure resistance between connector (A) and (C) as shown in [FIG. 2].
      In [FIG.2.] the measured resistance of line 1 and 2 is higher than 1kΩ and below 1 Ω respectively. Specifically the open circuit is line 1 (Line 2 is normal). To find exact break point, check sub line of line 1 as described in next step.

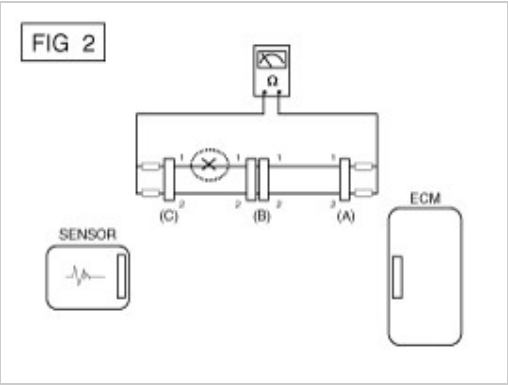

b. Disconnect connector (B), and measure for resistance between connector (C) and (B1) and between (B2) and (A) as shown in [FIG. 3].
In this case the measured resistance between connector (C) and (B1) is higher than 1MΩ and the open circuit is between terminal 1 of connector (C) and terminal 1 of connector (B1).

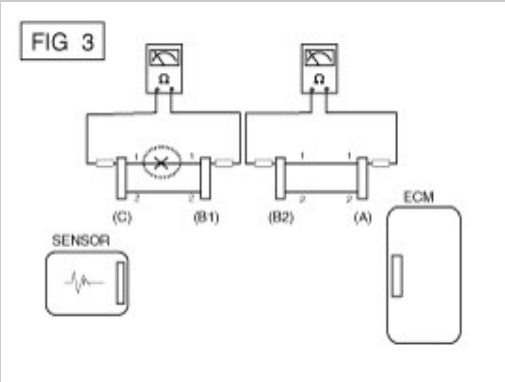

3. Voltage Check Method
   a. With each connector still connected, measure the voltage between the chassis ground and terminal 1 of each connectors (A), (B) and (C) as shown in [FIG. 4].
   The measured voltage of each connector is 5V, 5V and 0V respectively. So the open circuit is between connector (C) and (B).

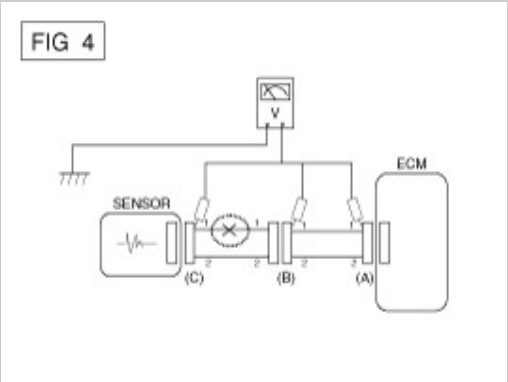

● Check Short Circuit

1. Test Method for Short to Ground Circuit
   - Continuity Check with Chassis Ground

   If short to ground circuit occurs as shown in [FIG. 5], the broken point can be found by performing Step 2 (Continuity Check Method with Chassis Ground) as shown below.

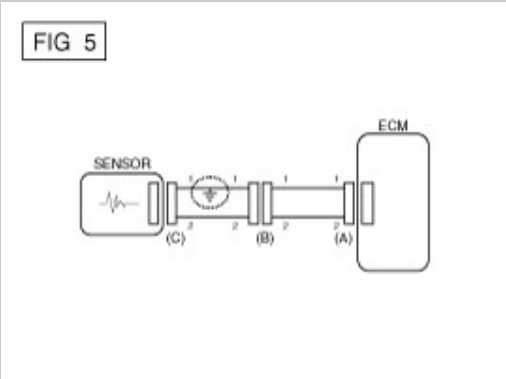

2. Continuity Check Method (with Chassis Ground)

NOTICE

- Lightly shake the wire harness above and below, or from side to side when measuring the resistance.

Specification (Resistance)

1Ω or less → Short to Ground Circuit

1MΩ or Higher → Normal Circuit

a. Disconnect connectors (A), (C) and measure for resistance between connector (A) and Chassis Ground as shown in [FIG. 6].
   The measured resistance of line 1 and 2 in this example is below 1 Ω and higher than 1MΩ respectively. Specifically the short to ground circuit is line 1 (Line 2 is normal). To find exact broken point, check the sub line of line 1 as described in the following step.

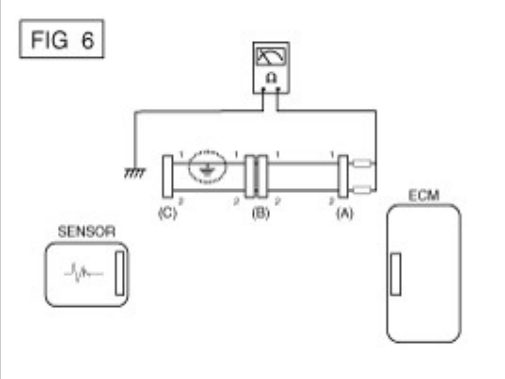

b. Disconnect connector (B), and measure the resistance between connector (A) and chassis ground, and between (B1) and chassis ground as shown in [FIG. 7].
   The measured resistance between connector (B1) and chassis ground is 1Ω or less. The short to ground circuit is between terminal 1 of connector (C) and terminal 1 of connector (B1).

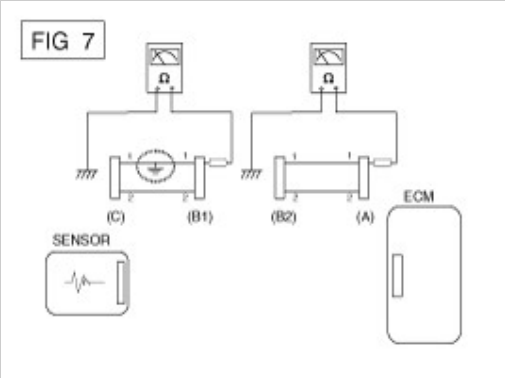

● Testing For Voltage Drop

This test checks for voltage drop along a wire, or through a connection orswitch.

A. Connect the positive lead of a voltmeter to the end of the wire (or to the side of the connector or switch) closest to the battery.

B. Connect the negative lead to the other end of the wire. (or the other side of the connector or switch)

C. Operate the circuit.

D. The voltmeter will show the difference in voltage between the two points. A difference, or drop of more than 0.1 volts (50mV in 5V circuits), may indicate a problem. Check the circuit for loose or dirty connections.

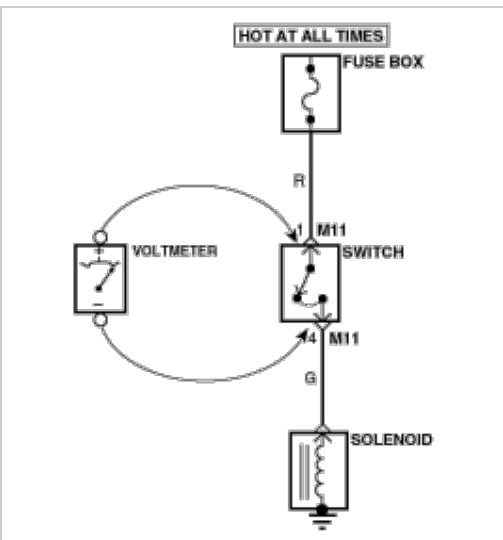

Symptom Troubleshooting Guide Chart

Main symptom	Diagnostic procedure	Also check for
Unable to start (Engine does not turn over)	1) Test the battery. (Refer to Engine Electrical System - "Battery") 2) Test the starter. (Refer to Engine Electrical System - "Starter") 3) Inhibitor switch (A/T) or clutch start switch (M/T)	
	1)	•

Unable to start (Incomplete combustion)	Test the battery. (Refer to Engine Electrical System - "Battery") 2) Check the fuel pressure (Refer to Fuel Delivery System - "Fuel Pressure Test") 3) Check the ignition circuit. (Refer to Engine Electrical System - "Ignition System") 4) Troubleshooting the immobilizer system. (Refer to Body Electrical System - "Immobilizer System") (In case of immobilizer lamp flashing)	DTC • Low compression • Intake air leaks • Slipped or broken timing belt • Contaminated fuel
Difficult to start	1) Test the battery. (Refer to Engine Electrical System - "Battery") 2) Check the fuel pressure (Refer to Fuel Delivery System - "Fuel Pressure Test") 3) Check the ECT sensor and circuit (Check DTC) 4) Check the ignition circuit. (Refer to Engine Electrical System - "Ignition System")	• DTC • Low compression • Intake air leaks • Contaminated fuel • Weak ignition spark
Poor idling (Rough, unstable or incorrect Idle)	1) Check the fuel pressure. (Refer to Fuel Delivery System - "Fuel Pressure Test") 2) Check the Injector. (Refer to Engine Control System - "Injector") 3) Check the long term fuel trim and short term fuel trim (Refer to CUSTOMER DATASTREAM) 4) Check the idle speed control circuit (Check DTC) 5) Inspect and test the Throttle Body 6) Check the ECT sensor and circuit (Check DTC)	• DTC • Low compression • Intake air leaks • Contaminated fuel • Weak ignition spark
Engine stall	1) Test the battery. (Refer to Engine Electrical System - "Battery") 2) Check the fuel pressure. (Refer to Fuel Delivery System - "Fuel Pressure Test") 3) Check the idle speed control circuit (Check DTC) 4) Check the ignition circuit. (Refer to Engine Electrical System - "Ignition System") 5) Check the CKPS Circuit (Check DTC)	• DTC • Intake air leaks • Contaminated fuel • Weak ignition spark
Poor driving (Surge)	1) Check the fuel pressure. (Refer to Fuel Delivery System - "Fuel Pressure Test") 2) Inspect and test Throttle Body 3) Check the ignition circuit. (Refer to Engine Electrical System - "Ignition System") 4) Check the ECT Sensor and Circuit (Check DTC) 5) Test the exhaust system for a possible restriction. (Refer to Engine Mechanical System - "Exhaust Manifold") 6) Check the long term fuel trim and short term fuel trim (Refer to CUSTOMER DATASTREAM)	• DTC • Low compression • Intake air leaks • Contaminated fuel • Weak ignition spark
Knocking	1) Check the fuel pressure. (Refer to Fuel Delivery System - "Fuel Pressure Test") 2) Inspect the engine coolant. (Refer to Engine Mechanical System - "Radiator") 3) Inspect the radiator and the electric cooling fan. (Refer to Engine Mechanical System - "Radiator") 4) Check the spark plugs. (Refer to Engine Electrical System - "Ignition System")	• DTC • Contaminated fuel
Poor fuel economy	1) Check customer"s driving habitsIs · A/C on full time or the defroster mode on? · Are tires at correct pressure? · Is excessively heavy load being carried? · Is acceleration too much, too often? 2) Check the fuel pressure. (Refer to Fuel Delivery System - "Fuel Pressure Test") 3) Check the injector. (Refer to Engine Control System - "Injector") 4) Test the exhaust system for a possible restriction 5) Check the ECT sensor and circuit	• DTC • Low compression • Intake air leaks • Contaminated fuel • Weak ignition spark
Hard to refuel (Overflow during refueling)	1) Inspect the fuel filler hose/pipe · Pinched, kinked or blocked? · Filler hose is torn 2) Inspect the fuel tank vapor vent hose between the EVAP. canister and air filter 3) Check the EVAP. canister	• Malfunctioning gas station filling nozzle (If this problem occurs at a specific gas station during refueling)

OBD-II review

1. Overview

The California Air Resources Board (CARB) began regulation of On Board Diagnostics (OBD) for vehicles sold in California beginning with the 1988 model year. The first phase, OBD-I, required monitoring of the fuel metering system, Exhaust Gas Recirculation (EGR) system and additional emission related components. The Malfunction Indicator Lamp (MIL) was required to light and alert the driver of the fault and the need for repair of the emission control system. Associated with the MIL was a fault code or Diagnostic Trouble Code (DTC) idenfying the specific area of the fault.

The OBD system was proposed by CARB to improve air quality by identifying vehicle exceeding emission standards. Passage of the Federal Clean Air Act Amendments in 1990 has also prompted the Environmental Protection Agency (EPA) to develop On Board Diagnostic requirements. CARB OBD-II regulations were followed until 1999 when the federal regulations were used.

The OBD-II system meets government regulations by monitoring the emission control system. When a system or component exceeds emission threshold or a component operates outside tolerance, a DTC will be stored and the MIL illuminated.

The diagnostic executive is a computer program in the Engine Control Module (ECM) or PowertrainControl Module (PCM) that coordinates the OBD-II self-monitoring system. This program controls all the monitors and interactions, DTC and MIL operation, freeze frame data and scan tool interface.

Freeze frame data describes stored engine conditions, such as state of the engine, state of fuel control, spark, RPM, load and warm status at the point the first fault is detected. Previously stored conditions will be replaced only if a fuel or misfire fault is detected. This data is accessible with the scan tool to assist in repairing the vehicle.

The center of the OBD-II system is a microprocessor called the Engine Control Module (ECM) or Powertrain Control Module(PCM).

The ECM or PCM receives input from sensors and other electronic components (switches, relays, and others) based on information received and programmed into its memory (keep alive random access memory, and others), the ECM or PCM generates output signals to control various relays, solenoids and actuators.

2. Configuration of hardware and related terms

1) GST (Generic scan tool)

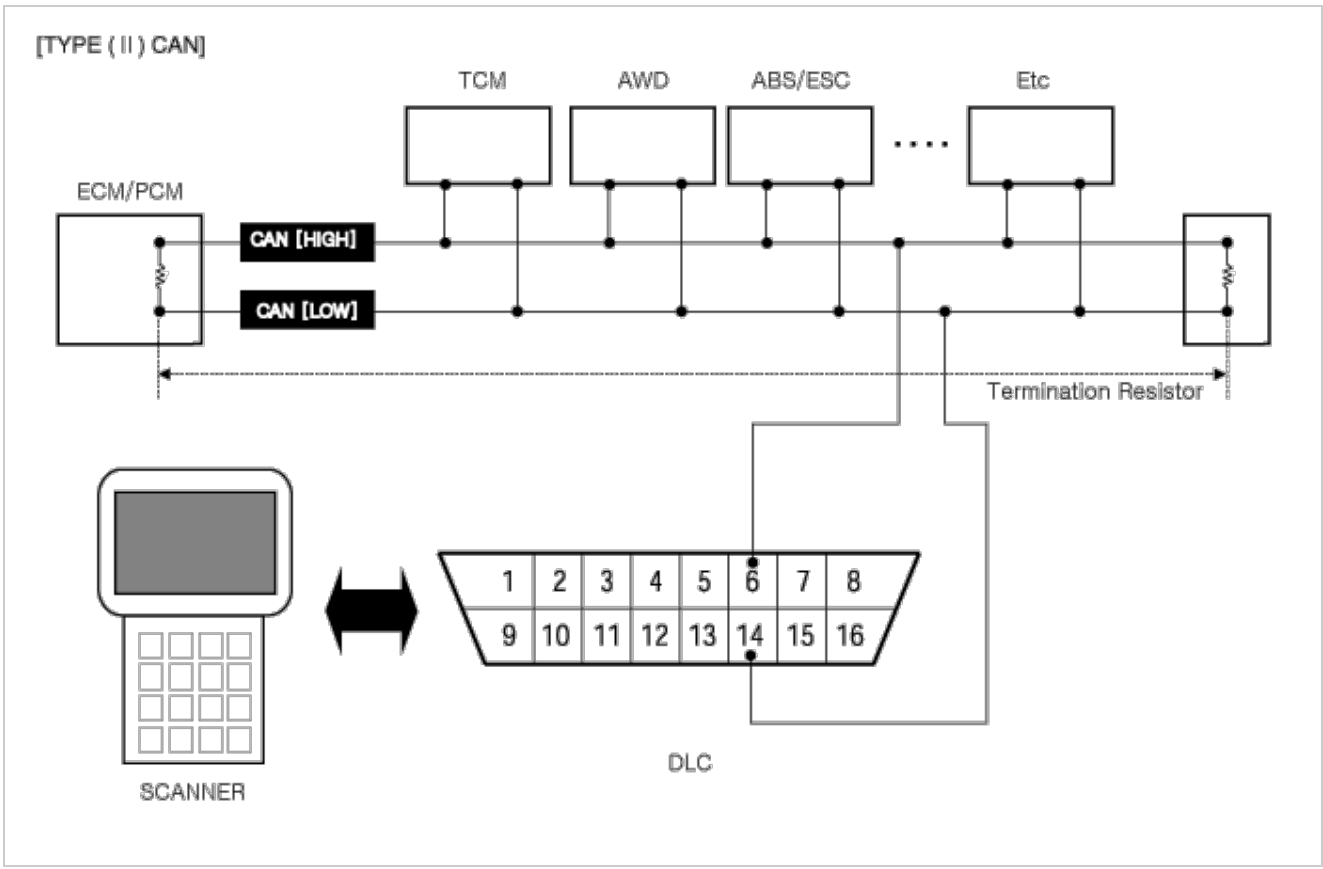

2) MIL (Malfunction indication lamp) - MIL activity by transistor

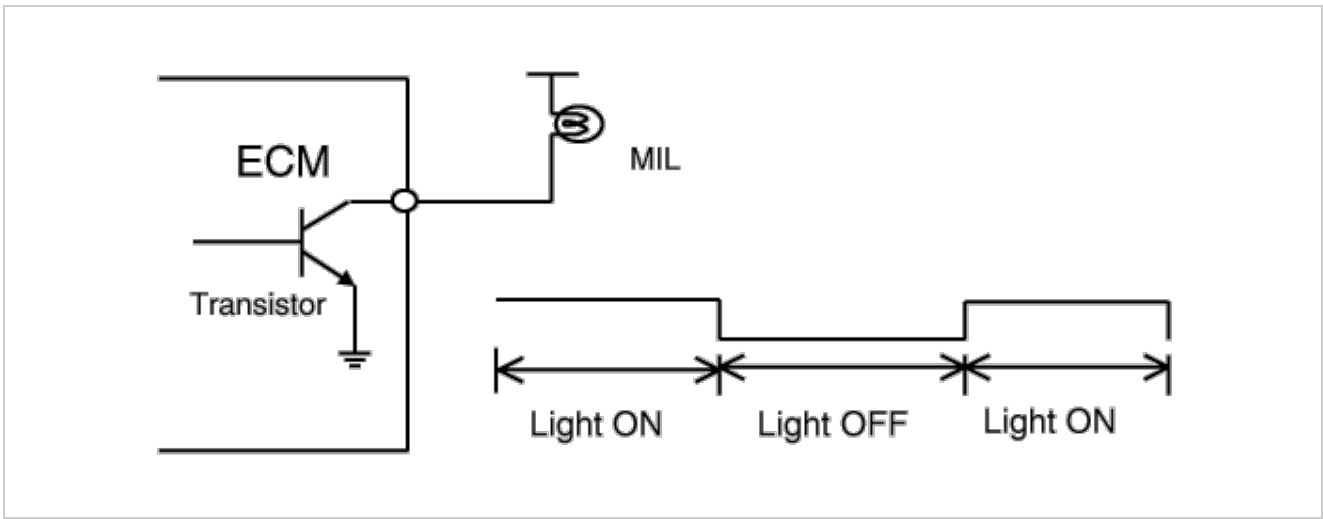

The Malfunction Indicator Lamp (MIL) is connected between ECM or PCM-terminal Malfunction Indicator Lamp and battery supply (open collector amplifier).

In most cars, the MIL will be installed in the instrument panel. The lamp amplifier can not be damaged by a short circuit.

Lamps with a power dissipation much greater than total dissipation of the MIL and lamp in the tester may cause a fault indication.

▷ At ignition ON and engine revolution (RPM)< MIN. RPM, the MIL is switched ON for an optical check by the driver.

3) MIL illumination

When the ECM or PCM detects a malfunction related emission during the first driving cycle, the DTC and engine data are stored in the freeze frame memory. The MIL is illuminated only when the ECM or PCM detects the same malfunction related to the DTC in two consecutive driving cycles.

4) MIL elimination

● Misfire and Fuel System Malfunctions:

For misfire or fuel system malfunctions, the MIL may be eliminated if the same fault does not reoccur during monitoring in three subsequent sequential driving cycles in which conditions are similar to those under which the malfunction was first detected.

● All Other Malfunctions:

For all other faults, the MIL may be extinguished after three subsequent sequential driving cycles during which the monitoring system responsible for illuminating the MIL functions without detecting the malfunction and if no other malfunction has been identified that would independently illuminate the MIL according to the requirements outlined above.

5) Erasing a fault code

The diagnostic system may erase a fault code if the same fault is not re-registered in at least 40 engine warm-up cycles, and the MIL is not illuminated for that fault code.

6) Communication Line (CAN)

- Bus Topology : Line (bus) structure
- Wiring : Twisted pair wire
- Off Board DLC Cable Length : Max. 5m
- Data Transfer Rate
  - Diagnostic : 500 kbps
  - Service Mode (Upgrade, Writing VIN) : 500 or 1Mbps)

7) Driving cycle

A driving cycle consists of engine start up, and engine shut off.

8) Warm-up cycle

A warm-up cycle means sufficient vehicle operation such that the engine coolant temperature has risen by at least 40 degrees Fahrenheit from engine starting and reaches a minimum temperature of at least 160 degrees Fahrenheit.

9) Trip cycle

A trip means vehicle operation (following an engine-off period) of duration and driving mode such that all components and systems are monitored at least once by the diagnostic system except catalyst efficiency or evaporative system monitoring when a steady-speed check is used, subject to the limitation that the manufacturer-defined trip monitoring conditions shall all be encountered at least once during the first engine start portion of the applicable FTP cycle.

10) DTC format

- Diagnostic Trouble Code (SAE J2012)
- DTCs used in OBD-II vehicles will begin with a letter and are followed by four numbers.

The letter of the beginning of the DTC identifies the function of the monitored device that has failed. A "P" indicates a powertrain device, "C" indicates a chassis device. "B" is for body device and "U" indicates a network or data link code. The first number indicates if the code is generic (common to all manufacturers) or if it is manufacturer specific. A "0" & "2" indicates generic, "1" indicates manufacturer-specific. The second number indicates the system that is affected with a number between 1 and 7.

The following is a list showing what numbers are assigned to each system.

1) Fuel and air metering
2) Fuel and air metering(injector circuit malfunction only)
3) Ignition system or misfire
4) Auxiliary emission controls
5) Vehicle speed controls and idle control system
6) Computer output circuits
7) Transmission

The last two numbers of the DTC indicates the component or section of the system where the fault is located.

11) Freeze frame data

When a freeze frame event is triggered by an emission related DTC, the ECM or PCM stores various vehicle information as it existed the moment the fault ocurred. The DTC number along with the engine data can be useful in aiding a technician in locating the cause of the fault. Once the data from the 1st driving cycle DTC ocurrence is stored in the freeze frame memory, it will remain there even when the fault ocurrs again (2nd driving cycle) and the MIL is illuminated.

- Freeze Frame List

a. Calculated Load Value
b. Engine RPM
c. Fuel Trim
d. Fuel Pressure (if available)
e. Vehicle Speed (if available)
f. Coolant Temperature
g. Intake Manifold Pressure (if available)
h. Closed-or Open-loop operation
i. Fault code

3. OBD-II system readiness tests

1) Catalyst monitoring

The catalyst efficiency monitor is a self-test strategy within the ECM or PCM that uses the downstream Heated Oxygen Sensor (HO2S) to determine when a catalyst has fallen below the minimum level of effectiveness in its ability to control exhaust emission.

2) Misfire monitoring

Misfire is defined as the lack of proper combustion in the cylinder due to the absence of spark, poor fuel metering, or poor compression. Any combustion that does not occur within the cylinder at the proper time is also a misfire. The misfire detection monitor detects fuel, ignition or mechanically induced misfires. The intent is to protect the catalyst from permanent damage and to alert the customer of an emission failure or an inspection maintenance failure by illuminating the MIL . When a misfire is detected, special software called freeze frame data is enabled. The freeze frame data captures the operational state of the vehicle when a fault is detected from misfire detection monitor strategy.

3) Fuel system monitoring

The fuel system monitor is a self-test strategy within the ECM or PCM that monitors the adaptive fuel table The fuel control system uses the adaptive fuel table to compensate for normal variability of the fuel system components caused by wear or aging. During normal vehicle operation, if the fuel system appears biased lean or rich, the adaptive value table will shift the fuel delivery calculations to remove bias.

4) Engine cooling system monitoring

The cooling system monitoring is a self-test strategy within the ECM or PCM that monitors ECTS (Engine Coolant Temperature Sensor) and thermostat about circuit continuity, output range, rationality faults.

5) O2 sensor monitoring

OBD-II regulations require monitoring of the upstream Heated O2 Sensor (H2OS) to detect if the deterioration of the sensor has exceeded thresholds. An additional HO2S is located downstream of the Warm-Up Three Way Catalytic Converter (WU-TWC) to determine the efficiency of the catalyst.

Although the downstream H2OS is similar to the type used for fuel control, it functions differently. The downstream HO2S is monitored to determine if a voltage is generated. That voltage is compared to a calibrated acceptable range.

6) Evaporative emission system monitoring

The EVAP. monitoring is a self-test strategy within the ECM or PCM that tests the integrity of the EVAP. system. The complete evaporative system detects a leak or leaks that cumulatively are greater than or equal to a leak caused by a 0.040 inch and 0.020 inch diameter orifice.

7) Air conditioning system monitoring

The A/C system monitoring is a self-test strategy within the ECM or PCM that monitors malfunction of all A/C system components at A/C ON.

8) Comprehensive components monitoring

The comprehensive components monitoring is a self-test strategy within the ECM or PCM that detects fault of any electronic powertrain components or system that provides input to the ECM or PCM and is not exclusively an input to any other OBD-II monitor.

Components Location

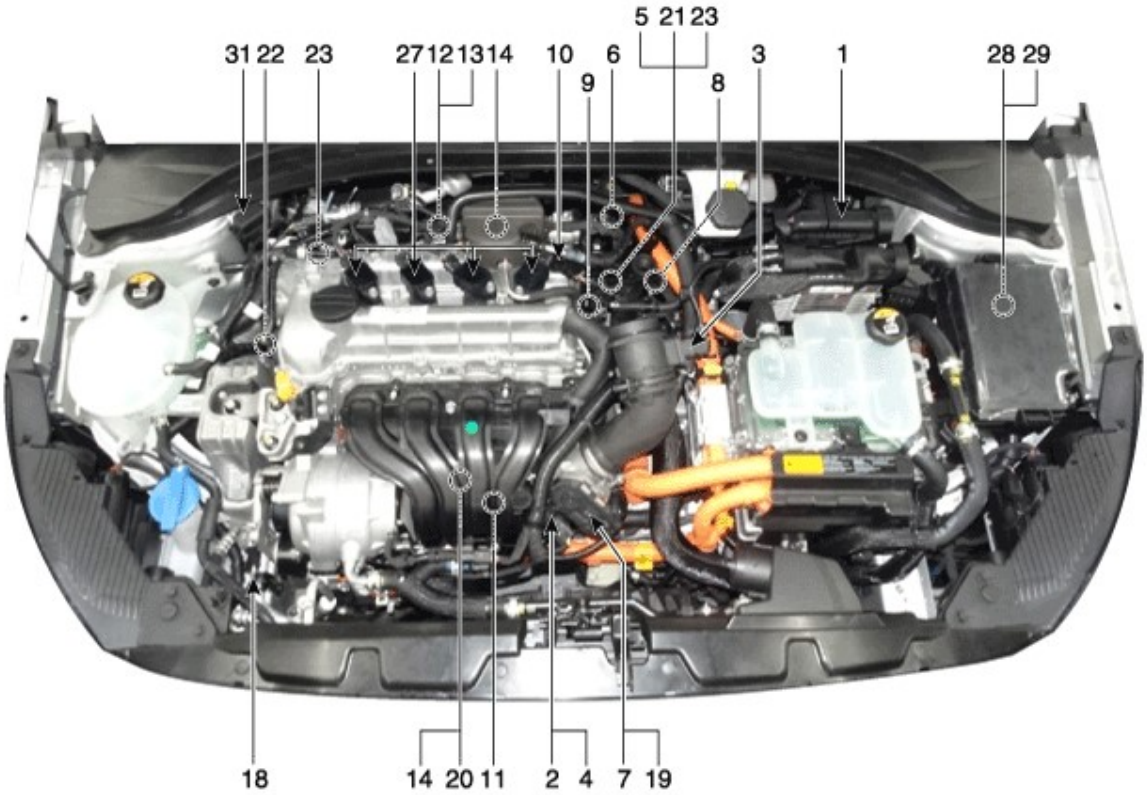
5 21 23
31 22 23
27 12 13 14
10
6
9
8
3
1
28 29
18
14 20 11
2 4
7 19

30
15

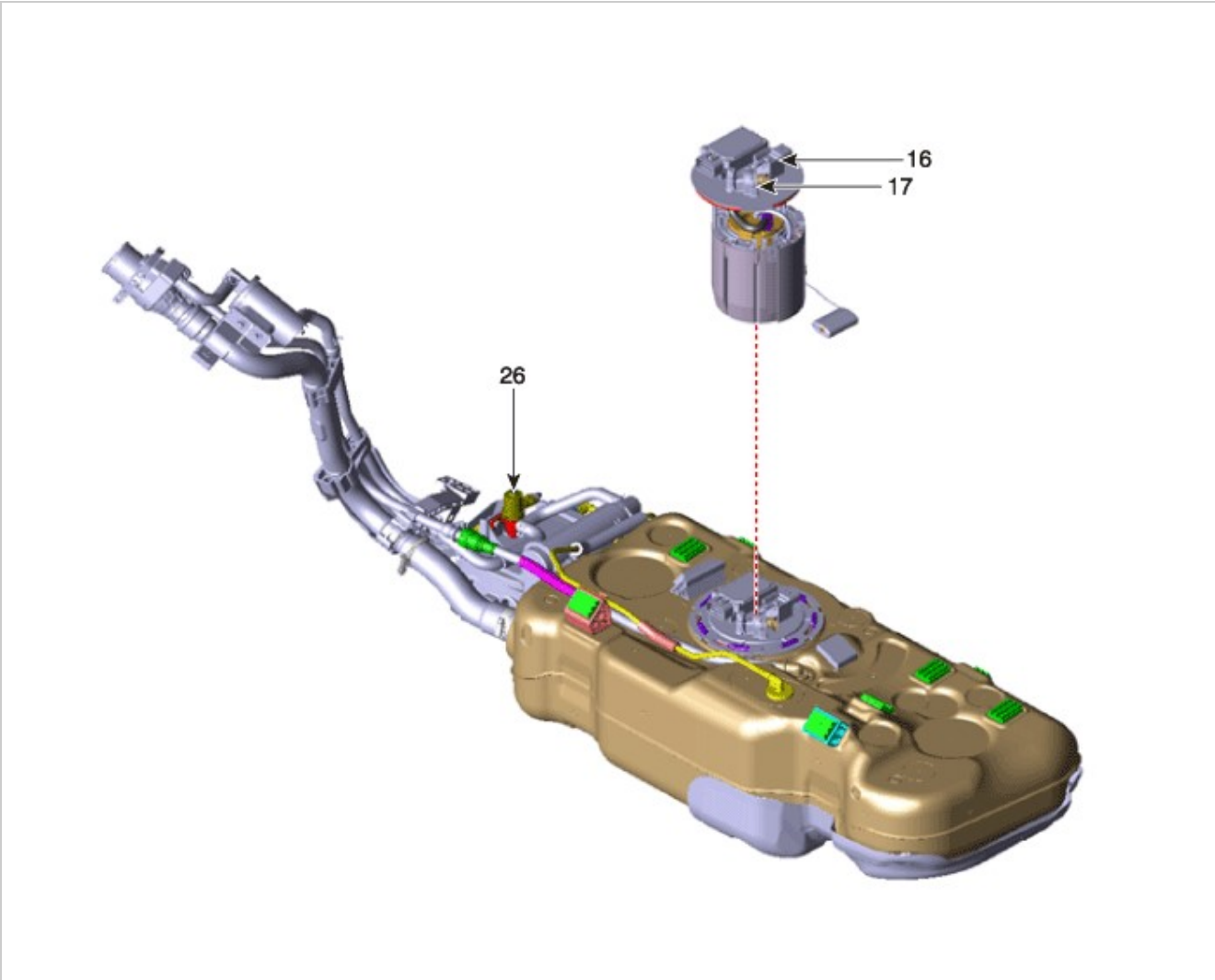

1. Engine Control Module (ECM)
2. Manifold Absolute Pressure Sensor (MAPS)
3. Mass Air Flow Sensor (MAFS)
4. Intake Air Temperature Sensor (IATS)
5. Engine Coolant Temperature Sensor (ECTS) [Water Temperature Control Assembly]
6. Engine Coolant Temperature Sensor (ECTS) [EGR Cooler Tube]
7. Throttle Position Sensor (TPS) [integrated into ETC Module]
8. Crankshaft Position Sensor (CKPS)
9. Camshaft Position Sensor (CMPS) [Bank 1 / Intake]
10. Camshaft Position Sensor (CMPS) [Bank 1 / Exhaust]
11. Knock Sensor (KS)
12. Heated Oxygen Sensor (HO2S) [Bank 1 / Sensor 1]
13. Heated Oxygen Sensor (HO2S) [Bank 1 / Sensor 2]
14. Rail Pressure Sensor (RPS)
15. Accelerator Position Sensor (APS)
16. Fuel Tank Pressure Sensor (FTPS)
17. Fuel Pressure Sensor (FPS)
18. A/C Pressure Transducer (APT)
19. ETC Motor [integrated into ETC Module]
20. Injector
21. Purge Control Solenoid Valve (PCSV)
22. CVVT Oil Control Solenoid (OCS) [Bank 1 / Intake]
23. CVVT Oil Control Valve (OCV) [Bank 1 / Exhaust]
24. Fuel Pressure Control Valve (FPCV)
25. Electric EGR Control Valve
26. Canister Close Valve (CCV)
27. Ignition Coil
28. Main Relay
29. Fuel Pump Relay
30. Data Link Connector (DLC) [16-Pin]
31. Multi-Purpose Check Connector [20-Pin]

1. Engine Control Module (ECM)	2. Manifold Absolute Pressure Sensor (MAPS) 4. Intake Air Temperature Sensor (IATS)
3. Mass Air Flow Sensor (MAFS)	5. Engine Coolant Temperature Sensor (ECTS) [Water Temperature Control Assembly]

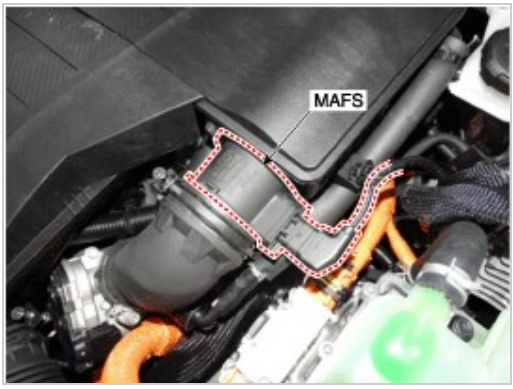

6. Engine Coolant Temperature Sensor (ECTS) [EGR Cooler Tube]

7. Throttle Position Sensor (TPS) [integrated into ETC Module]
19. ETC Motor [integrated into ETC Module]

8. Crankshaft Position Sensor (CKPS)

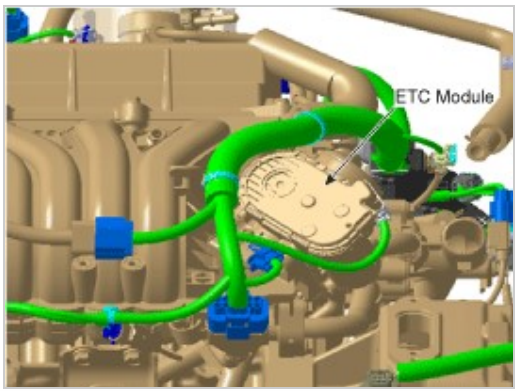

9. Camshaft Position Sensor (CMPS) [Bank 1 / Intake]
21. Purge Control Solenoid Valve (PCSV)

10. Camshaft Position Sensor (CMPS) [Bank 1 / Exhaust]

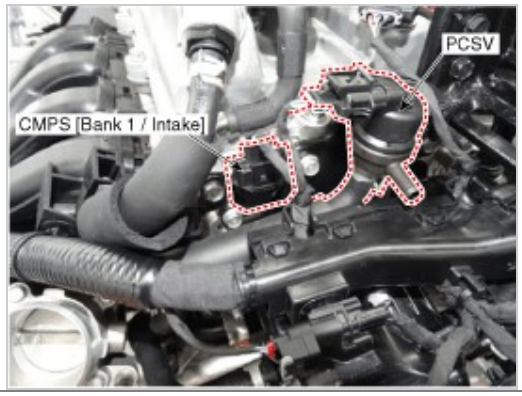

11. Knock Sensor (KS)

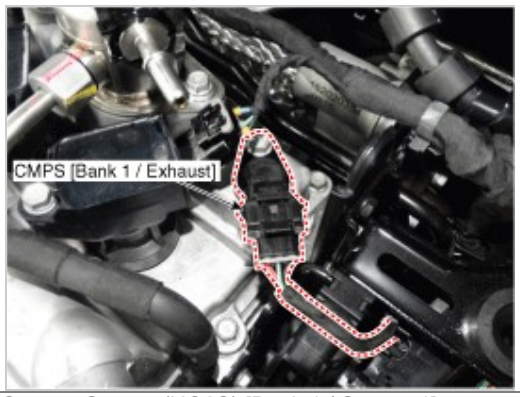

12. Heated Oxygen Sensor (HO2S) [Bank 1 / Sensor 1]

13. Heated Oxygen Sensor (HO2S) [Bank 1 / Sensor 2]

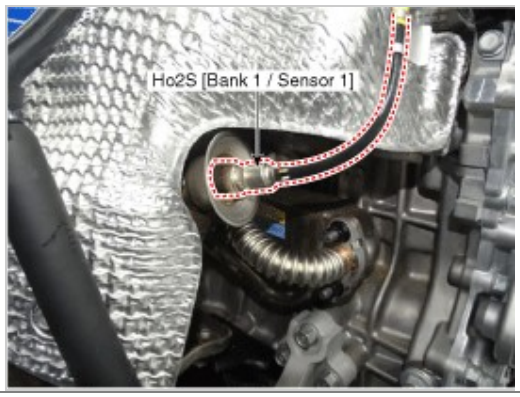

14. Rail Pressure Sensor (RPS)
20. Injector

15. Accelerator Position Sensor (APS)

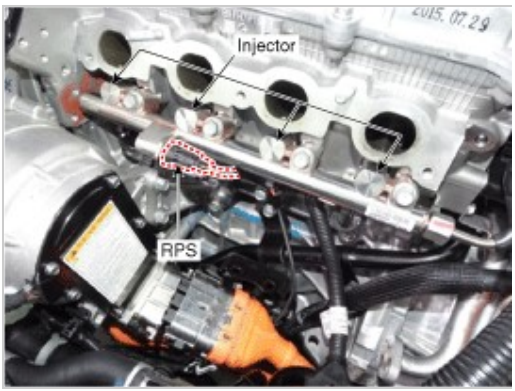

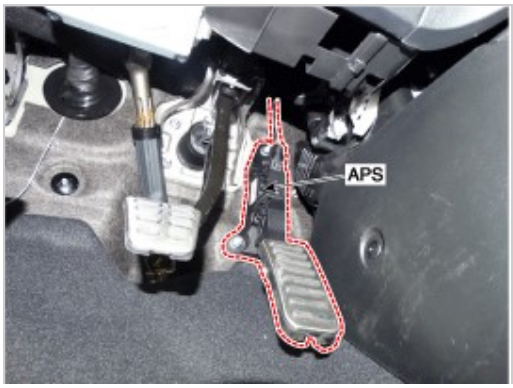

16. Fuel Tank Pressure Sensor (FTPS)
17. Fuel Pressure Sensor (FPS)

18. A/C Pressure Transducer (APT)

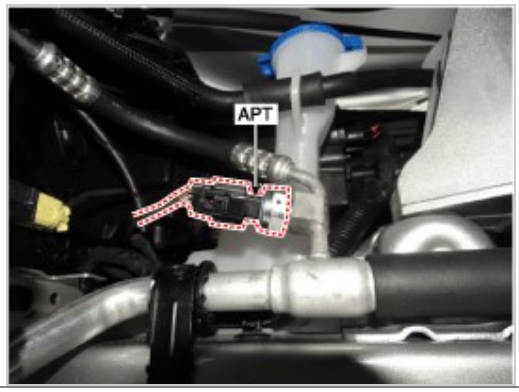

22. CVVT Oil Control Solenoid (OCS) [Bank 1 / Intake]

23. CVVT Oil Control Valve (OCV) [Bank 1 / Exhaust]

24. Fuel Pressure Control Valve (FPCV)
27. Ignition Coil

25. Electric EGR Control Valve

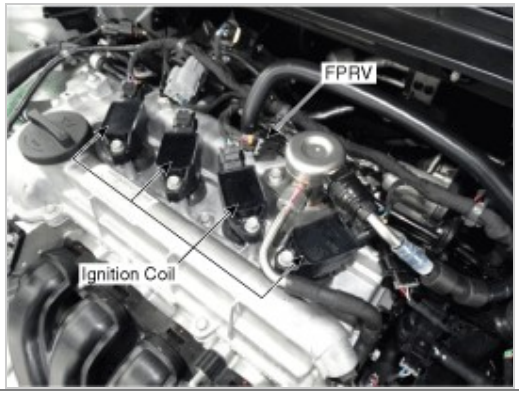

26. Canister Close Valve (CCV)

28. Main Relay
29. Fuel Pump Relay

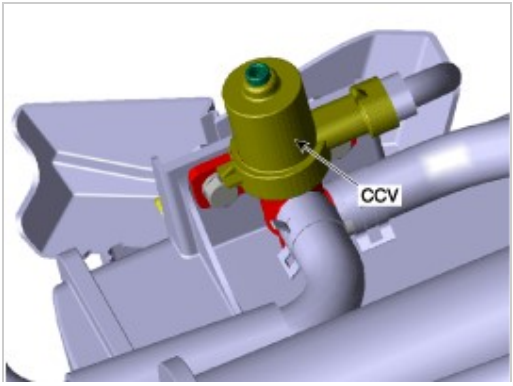

30. Data Link Connector (DLC) [16-Pin]

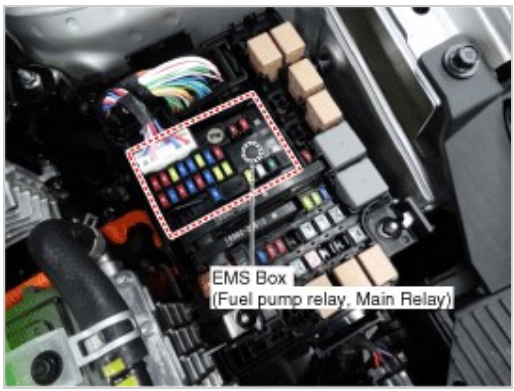

31. Multi-Purpose Check Connector [20-Pin]

Engine Control/Fuel System

ECM Terminal And Input/Output signal

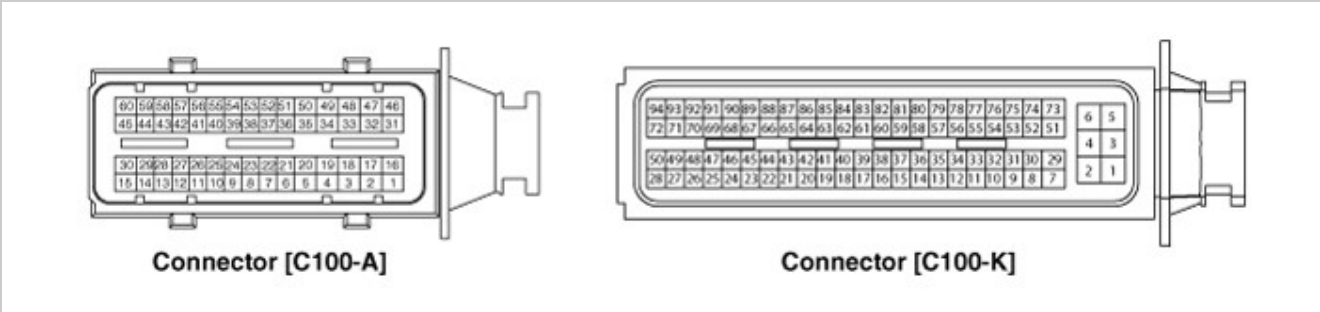

ECM Terminal Function

Connector [C100-A]

Pin No.	Description	Connected to
1	Injector (Cylinder #3) [Low] control output	Injector (Cylinder #3)
2	Injector (Cylinder #4) [High] control output	Injector (Cylinder #4)
3	Injector (Cylinder #3) [Low] control output	Injector (Cylinder #3)
4	Vehicle speed signal output	Cluster
5	EGR valve (motor -)	EGR valve
6	Sensor power (+5V)	Throttle Position Sensor (TPS) 1,2
7	Sensor power (+5V)	EGR valve
8	Knock Sensor (KS) signal input	Knock Sensor (KS)

9	Camshaft Position Sensor (CMPS) [Bank 1/Exhaust] signal input	Camshaft Position Sensor (CMPS) [Bank 1 / Exhaust]
10	-	
11	Brake Switch [test] signal input	Brake Switch
12	Brake Switch [lamp] signal input	Brake Switch
13	-	
14	-	
15	-	
16	Injector (Cylinder #3) [High] control output	Injector (Cylinder #3)
17	Injector (Cylinder #1) [High] control output	Injector (Cylinder #1)
18	Injector (Cylinder #1) [Low] control output	Injector (Cylinder #1)
19	-	
20	EGR valve (motor +)	EGR valve
21	Sensor shield	Knock Sensor (KS)
22	Sensor ground	Knock Sensor (KS)
23	-	
24	Sensor ground	Camshaft Position Sensor (CMPS) [Bank 1 / Exhaust]
25	-	
26	-	
27	-	
28	-	
29	-	
30	-	
31	Injector (Cylinder #2) [High] control output	Injector (Cylinder #2)
32	-	
33	ETC Motor [-] control output	ETC Motor
34	Sensor ground	Throttle Position Sensor (TPS) 1,2
35	Throttle Position Sensor (TPS) 1 signal input	Throttle Position Sensor (TPS) 1
36	Sensor ground	Rail Pressure Sensor (RPS)
37	Rail Pressure Sensor (RPS) signal input	Rail Pressure Sensor (RPS)
38	-	
39	Camshaft Position Sensor (CMPS) [Bank 1/Intake] signal input	Camshaft Position Sensor (CMPS) [Bank 1/Intake]
40	-	
41	-	
42	-	
43	VS-/IP- (Common Ground for VS, IP)	Heated Oxygen Sensor [Bank 1/Sensor 1]
44	Rc (Compensative Resistance)	Heated Oxygen Sensor [Bank 1/Sensor 1]
45	Sensor ground	Heated Oxygen Sensor [Bank 1/Sensor 2]
46	Injector (Cylinder #2) [Low] control output	Injector (Cylinder #2)
47	-	
48	ETC Motor [+] control output	ETC Motor
49	-	
50	Throttle Position Sensor (TPS) 2 signal input	Throttle Position Sensor (TPS) 2
51	Sensor power (+5V)	Rail Pressure Sensor (RPS)
52	Electrical load signal input	Wiper Motor
53	Sensor ground	Camshaft Position Sensor (CMPS) [Bank 1/Intake]
54	Sensor ground	EGR valve
55	EGR valve (Feedback signal)	EGR valve
56	-	
57	-	
58	VS+ (NERNST Cell Voltage)	Heated Oxygen Sensor [Bank 1/Sensor 1]
59	Rc/Rp (Pump Cell Voltage)	Heated Oxygen Sensor [Bank 1/Sensor 1]
60	Heated Oxygen Sensor [Bank 1/Sensor 2] signal input	Heated Oxygen Sensor [Bank 1/Sensor 2]

Connector [C100-K]

Pin No.	Description	Connected to
1	ECM ground	Chassis Ground
2	Battery power (B+)	Main Relay
3	ECM ground	Chassis Ground
4	Battery power (B+)	Main Relay
5	ECM ground	Chassis Ground
6	Battery power (B+)	Main Relay
7	Fuel Pressure Control Valve [High] control output	Fuel Pressure Control Valve

8	-	
9	-	
10	Engine Coolant Temperature Sensor (ECTS) signal [EGR Cooler Tube]	Engine Coolant Temperature Sensor (ECTS) [EGR Cooler Tube]
11	Sensor ground	Engine Coolant Temperature Sensor (ECTS) [EGR Cooler Tube]
12	Vehicle speed signal input	Integrated brake actuation unit Smart key Control Module
13	-	
14	-	
15	Accelerator Position Sensor (APS) 2 signal input	Accelerator Position Sensor (APS) 2
16	Sensor power (+5V)	Accelerator Position Sensor (APS) 2
17	Sensor power (+5V)	Manifold Absolute Pressure Sensor (MAPS)
18	Sensor power (+5V)	Accelerator Position Sensor (APS) 1
19	Accelerator Position Sensor (APS) signal input	Accelerator Position Sensor (APS) 1
20	Sensor power (+5V)	Crankshaft Position Sensor (CKPS) A/C Pressure Transducer (APT) Fuel Tank Pressur Sensor (FTPS)
21	-	
22	-	
23	-	
24	Fuel Pump Relay control output	Fuel Pump Relay
25	-	
26	-	
27	-	
28	-	
29	Fuel Pressure Control Valve [Low] control output	Fuel Pressure Control Valve
30	A/C Pressure Transducer (APT) signal input	A/C Pressure Transducer (APT)
31	-	
32	Crankshaft Position Sensor (CKPS) signal input	Crankshaft Position Sensor (CKPS)
33	-	
34	-	
35	-	
36	-	
37	Sensor ground	Accelerator Position Sensor (APS) 2
38	Manifold Absolute Pressure Sensor (MAPS) signal input	Manifold Absolute Pressure Sensor (MAPS)
39	Intake Air Temperature Sensor (IATS) signal input	Intake Air Temperature Sensor (IATS)
40	Sensor ground	Manifold Absolute Pressure Sensor (MAPS)
41	Sensor ground	Accelerator Position Sensor (APS) 1
42	-	
43	-	
44	Mass Air Flow Sensor (MAFS) signal input	Mass Air Flow Sensor (MAFS)
45	Sensor ground	Mass Air Flow Sensor (MAFS)
46	Engine Control Relay control output	Main Relay
47	CVVT Oil control solenoid (OCS) [Bank 1/ Intake] control output	CVVT Oil control solenoid (OCS) [Bank 1/ Intake]
48	Canister Close Valve (CCV) control output	Canister Close Valve (CCV)
49	-	
50	-	
51	Battery power (B+)	Ignition Switch
52	-	
53	-	
54	Sensor ground	Crankshaft Position Sensor (CKPS)
55	P-CAN [High]	Other control module, Data Link Connector (DLC), Multi-Purpose Check Connetor
56	H-CAN [High]	Other control module, Data Link Connector (DLC), Multi-Purpose Check Connetor
57	-	
58	Immobilizer communication line	Smart key Control Module
59	-	
60	Engine Coolant Temperature Sensor (ECTS) signal input [Water Temperature Control Assembly]	Engine Coolant Temperature Sensor (ECTS) [Water Temperature Control Assembly]
61	Sensor ground	Engine Coolant Temperature Sensor (ECTS) [Water Temperature Control Assembly]
62	Fuel Level Sender (FLS) signal input	Fuel Level Sender (FLS)
63	-	

64	Ignition Coil (Cylinder #2) control output	Ignition Coil (Cylinder #2)
65	Ignition Coil (Cylinder #3) control output	Ignition Coil (Cylinder #3)
66	-	
67	-	
68	Cooling Fan Relay control output	Cooling Fan Relay
69	-	
70	CVVT Oil Control (OCV) Valve [Bank 1/Exhaust] control output	CVVT Oil Control Valve (OCV) [Bank 1/Exhaust]
71	-	
72	-	
73	Battery power (B+)	Battery
74	-	
75	Sensor ground	A/C Pressure Transducer (APT)
76	LIN communication signal input	Battery Sensor
77	P-CAN [Low]	Other control module, Data Link Connector (DLC), Multi-Purpose Check Connetor
78	H-CAN [Low]	Other control module, Data Link Connector (DLC), Multi-Purpose Check Connetor
79	-	
80	-	
81	-	
82	-	
83	Fuel Tank Pressur Sensor (FTPS) signal input	Fuel Tank Pressur Sensor (FTPS)
84	Sensor ground	Fuel Tank Pressur Sensor (FTPS)
85	-	
86	Ignition Coil (Cylinder #4) control output	Ignition Coil (Cylinder #4)
87	Ignition Coil (Cylinder #1) control output	Ignition Coil (Cylinder #1)
88	-	
89	-	
90	-	
91	Heated Oxygen Sensor (HO2S) [Bank 1/Sensor1] Heater control output	Heated Oxygen Sensor (HO2S) [Bank 1/Sensor 1]
92	Heated Oxygen Sensor (HO2S) [Bank 1/Sensor2] Heater control output	Heated Oxygen Sensor (HO2S) [Bank 1/Sensor 1]
93	Purge Control Solenoid Valve (PCSV) control output	Purge Control Solenoid Valve (PCSV)
94	-	

Connector [C100-K]

Pin No.	Description	Condition	Type	Level
1	ECM ground	Idle	DC	-0.3 to 0.5V
2	Battery power (B+)	IG OFF	DC	Max 1.0V
		IG ON		Battery Voltage (B+)
3	ECM ground	Idle	DC	-0.3 to 0.5V
4	Battery power (B+)	IG OFF	DC	Max 1.0V
		IG ON		Battery Voltage (B+)
5	ECM ground	Idle	DC	-0.3 to 0.5V
6	Battery power (B+)	IG OFF	DC	Max 1.0V
		IG ON		Battery Voltage (B+)
7	Fuel Pressure Control Valve [High] control output	Engine Run	PWM	
8	-			
9	-			
10	Engine Coolant Temperature Sensor (ECTS) signal [EGR Cooler Tube]	Idle	Analog	0.5 - 4.5V
				(Idle: 1.02V)
11	Sensor ground	Idle	DC	Max 50mV
12	Vehicle speed signal input			
13	-			
14	-			
15	Accelerator Position Sensor (APS) 2 signal input	C.T	Analog	Max 1.0V
		W.O.T		1.5 - 3.0V
16	Sensor power (+5V)	IG OFF	DC	Max 50mV
		IG ON		4.9 - 5.1V

17	Sensor power (+5V)	IG OFF IG ON	DC	Max 50mV 4.9 - 5.1V
18	Sensor power (+5V)	IG OFF IG ON	DC	Max 50mV 4.9 - 5.1V
19	Accelerator Position Sensor (APS) signal input	C.T W.O.T	Analog	Max 1.0V Min 4.0V
20	Sensor power (+5V)	IG OFF IG ON	DC	Max 50mV 4.9 - 5.1V
21	-			
22	-			
23	-			
24	Fuel Pump Relay control output	Relay OFF Relay ON	DC	Battery Voltage (B+) -0.3 to 1.2V
25	-			
26	-			
27	-			
28	-			
29	Fuel Pressure Control Valve [Low] control output	Engine Run	PWM	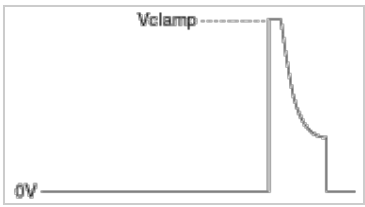
30	A/C Pressure Transducer (APT) signal input	A/C ON	Analog	0.348 - 4.63 V
31	-			
32	Crankshaft Position Sensor (CKPS) signal input	Engine Run	Pulse	High: 4.5 - 5.5V Low: -0.3 to 0.5V Frequency: 850Hz (Idle), 3,000Hz (3,000rpm)
33	-			
34	-			
35	-			
36	-			
37	Sensor ground	Idle	DC	Max 50mV
38	Manifold Absolute Pressure Sensor (MAPS) signal input	Idle	Analog	0.8 - 1.6V (Idle: 1.37V)
39	Intake Air Temperature Sensor (IATS) signal input	Idle	Analog	0 - 5.0V (Idle: 2.55V)
40	Sensor ground	Idle	DC	Max 50mV
41	Sensor ground	Idle	DC	Max 50mV
42	-			
43	-			
44	Mass Air Flow Sensor (MAFS) signal input			
45	Sensor ground	Idle	DC	Max 50mV
46	Engine Control Relay control output	Relay OFF Relay ON	DC	Battery Voltage (B+) -0.3 to 1.2V
47	CVVT Oil control solenoid (OCS) [Bank 1/ Intake] control output			
48	Canister Close Valve (CCV) control output	Active Inactive	Pulse	High : Battery voltage Low : Max. 1.0V Vpeak: 42.0 ~ 60.0V
49	-			
50	-			
51	Battery power (B+)	IG OFF IG ON	DC	Max 1.0V Battery Voltage (B+)
52	-			
53	-			
54	Sensor ground	Idle	DC	Max 50mV
55	P-CAN [High]	Recessive Dominant	Pulse	2.0 - 3.0V 2.75 - 4.5V
56	H-CAN [High]	Recessive Dominant	Pulse	2.0 - 3.0V 2.75 - 4.5V
57	-			
58	Immobilizer communication line			
59	-			
60	Engine Coolant Temperature Sensor (ECTS) signal input [Water Temperature Control Assembly]			

61	Sensor ground	Idle	DC	Max 50mV
62	Fuel Level Sender (FLS) signal input	Idle	Analog	0.55 - 4.37 V
63	-			
64	Ignition Coil (Cylinder #2) control output	Engine Run	Pulse	Vpeak = 360 - 440V 125
65	Ignition Coil (Cylinder #3) control output	Engine Run	Pulse	Vpeak = 360 - 440V 125
66	-			
67	-			
68	Cooling Fan Relay control output			
69	-			
70	CVVT Oil Control (OCV) Valve [Bank 1/Exhaust] control output	Idle	Pulse	High: Battery Voltage (B+) Low: -0.3 to 1.0V Frequency: 300Hz
71	-			
72	-			
73	Battery power (B+)	IG OFF IG ON	DC	Max 1.0V Battery Voltage (B+)
74	-			
75	Sensor ground	Idle	DC	Max 50mV
76	LIN communication signal input			
77	P-CAN [Low]	Recessive Dominant	Pulse	2.0 - 3.0V 2.75 - 4.5V
78	H-CAN [Low]	Recessive Dominant	Pulse	2.0 - 3.0V 2.75 - 4.5V
79	-			
80	-			
81	-			
82				
83	Fuel Tank Pressur Sensor (FTPS) signal input	Idle	Analog	-0.3 ~ 5.2V
84	Sensor ground	Idle	DC	Max 50mV
85				
86	Ignition Coil (Cylinder #4) control output	Engine Run	Pulse	Vpeak = 360 - 440V 125
87	Ignition Coil (Cylinder #1) control output	Engine Run	Pulse	Vpeak = 360 - 440V 125
88	-			
89	-			
90	-			
91	Heated Oxygen Sensor (HO2S) [Bank 1/Sensor1] Heater control output	Engine Run	Pulse	High: Battery Voltage (B+) Low: -0.3 to 1.0V Frequency: 8 - 10Hz Duty: 0 - 100%
92	Heated Oxygen Sensor (HO2S) [Bank 1/Sensor2] Heater control output	Engine Run	Pulse	High: Battery Voltage (B+) Low: -0.3 to 1.0V Frequency: 8 - 10Hz Duty: 0 - 100%
93	Purge Control Solenoid Valve (PCSV) control output	Inactive Active	Pulse	High: Battery Voltage (B+) Low: Max 1.0V Vpeak: 42.0 - 60.0V Frequency: 20Hz
94	-			

Circuit Diagram

Removal

⚠ CAUTION

- When replacing the ECM, the vehicle equipped with the immobilizer must be performed procedure as below.

[In the case of installing used ECM]

1) Perform "ECM Neutral mode" procedure with GDS. (Refer to Body Electrical System - "Immobilizer system")
2) After finishing "ECM Neutral mode", perform "Key teaching" procedure with GDS. (Refer to Body Electrical System - "Immobilizer system")

[In the case of installing new ECM]

Perform "Key teaching" procedure with GDS. (Refer to Body Electrical System - "Immobilizer system")

⚠ CAUTION

- When replacing the ECM, the vehicle equipped with the smart key system (Button start) must be performed procedure as below.

[In the case of installing used ECM]

1) Perform "ECM Neutral mode" procedure with GDS. (Refer to Body Electrical System - "Smart key")
2) After finishing "ECM Neutral mode", insert the key (or press the start button) and turn it to the IGN ON and OFF position. Then the ECM learns the smart key information automatically.

[In the case of installing new ECM]

Insert the key (or press the start button) and turn it to the IGN ON and OFF position. Then the ECM learns the smart key information automatically.

1. Turn ignition switch OFF and disconnect the negative (-) battery cable.
2. Disconnect the TCM Connector (A).
3. Disconnect the ECM Connector (B).

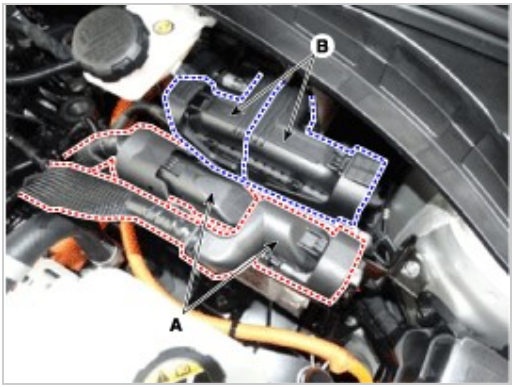

4. Remove the ECM (C) from the bracket after removing the screw (A) and nut (B).

5. Remove ECM (B) from the ECM and TCM bracket after loosening the bolt and nut (A).

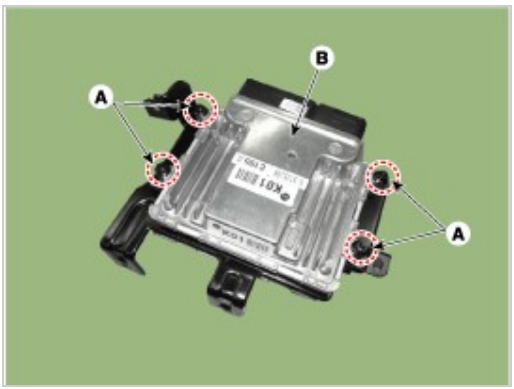

Installation

⚠ CAUTION

- When replacing the ECM, the vehicle equipped with the immobilizer must be performed procedure as below.

[In the case of installing used ECM]

1) Perform "ECM Neutral mode" procedure with GDS. (Refer to Body Electrical System - "Immobilizer system")

2) After finishing "ECM Neutral mode", perform "Key teaching" procedure with GDS. (Refer to Body Electrical System - "Immobilizer system")

[In the case of installing new ECM]

Perform "Key teaching" procedure with GDS. (Refer to Body Electrical System - "Immobilizer system")

⚠ CAUTION

- When replacing the ECM, the vehicle equipped with the smart key system (Button start) must be performed procedure as below.

[In the case of installing used ECM]

1) Perform "ECM Neutral mode" procedure with GDS. (Refer to Body Electrical System - "Smart key")

2) After finishing "ECM Neutral mode", insert the key (or press the start button) and turn it to the IGN ON and OFF position. Then the ECM learns the smart key information automatically.

[In the case of installing new ECM]

Insert the key (or press the start button) and turn it to the IGN ON and OFF position. Then the ECM learns the smart key information automatically.

1. Install in the reverse order of removal.

ECM installation nut:

9.8 - 11.8 N.m (1.0 - 1.2 kgf.m, 7.2 - 8.7 lb-ft)

ECM bracket installation bolt/nut:

7.8 - 11.8 N.m (0.8 - 1.2 kgf.m, 5.8 - 8.7 lb-ft)

ECM Problem Inspection Procedure

1. TEST ECM GROUND CIRCUIT: Measure resistance between ECM and chassis ground using the backside of ECM harness connector as ECM side check point. If the problem is found, repair it.

Specification: Below 1Ω

2. TEST ECM CONNECTOR: Disconnect the ECM connector and visually check the ground terminals on ECM side and harness side for bent pins or poor contact pressure. If the problem is found, repair it.
3. If problem is not found in Step 1 and 2, the ECM could be faulty. If so, make sure there were no DTC"s before swapping the ECM with a new one, and then check the vehicle again. If DTC"s were found, examine this first before swapping ECM.
4. RE-TEST THE ORIGINAL ECM: Install the original ECM (may be broken) into a known-good vehicle and check the vehicle. If the problem occurs again, replace the original ECM with a new one. If problem does not occur, this is intermittent problem (Refer to “Intermittent Problem Inspection Procedure” in Basic Inspection Procedure).

VIN Programming Procedure

VIN (Vehicle Identification Number) is a number that has the vehicle"s information (Maker, Vehicle Type, Vehicle Line/Series, Body Type, Engine Type, Transmission Type, Model Year, Plant Location and so forth. For more information, please refer to the group "GI" in this SERVICE MANUAL). When replacing an ECM, the VIN must be programmed in the ECM. If there is no VIN in ECM memory, the fault code (DTC P0630) is set.

⚠ CAUTION

- The programmed VIN cannot be changed. When writing the VIN, confirm the VIN carefully

1. Select "VIN Writing" function in "Vehicle S/W Management".
2. Select "Write VIN" in "ID Register".

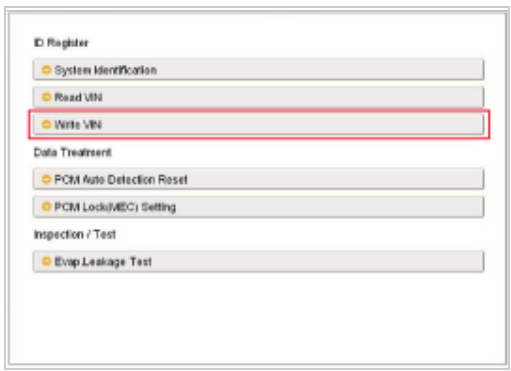

3. Input the VIN.

⚠ WARNING

- Before inputing the VIN, confirm the VIN again because the programmed VIN cannot be changed.

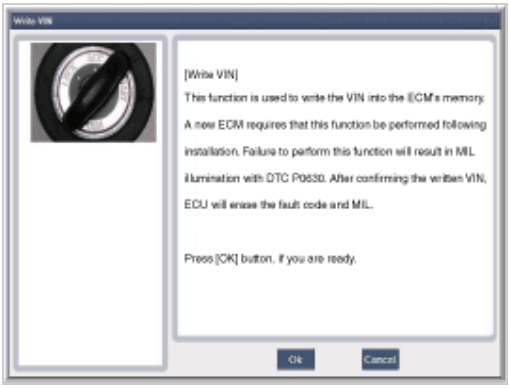

4. Turn the ignition switch OFF, then back ON.

Engine Control/Fuel System

Description

The Electronic Throttle Control (ETC) System consists of a throttle body with an integrated control motor and throttle position sensor (TPS). Instead of the traditional throttle cable, an Accelerator Position Sensor (APS) is used to receive driver input. The ECM uses the APS signal to calculate the target throttle angle; the position of the throttle is then adjusted via ECM control of the ETC motor. The TPS signal is used to provide feedback regarding throttle position to the ECM. Using ETC, precise control over throttle position is possible; the need for external cruise control modules/cables is eliminated.

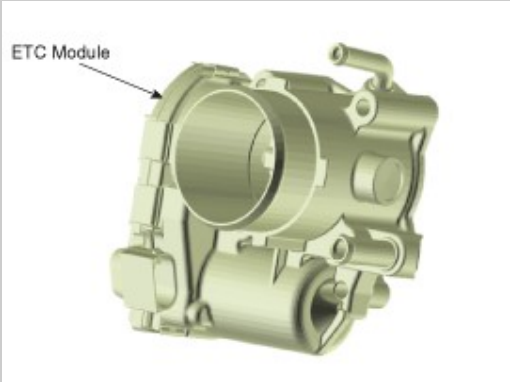

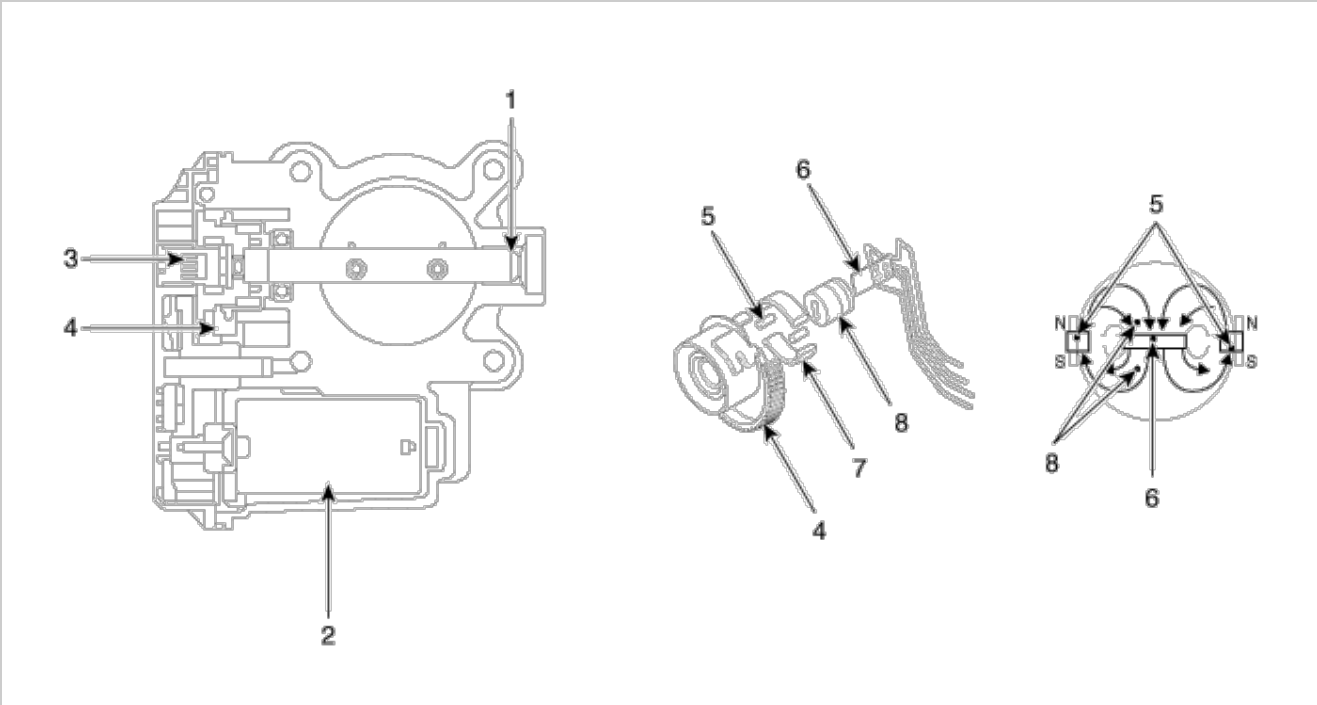

1. Dry bearing
2. DC motor
3. Non-contact hall sensor
4. Gear
5. Magnet
6. Hall IC
7. Yoke
8. Stator

Schematic Diagram

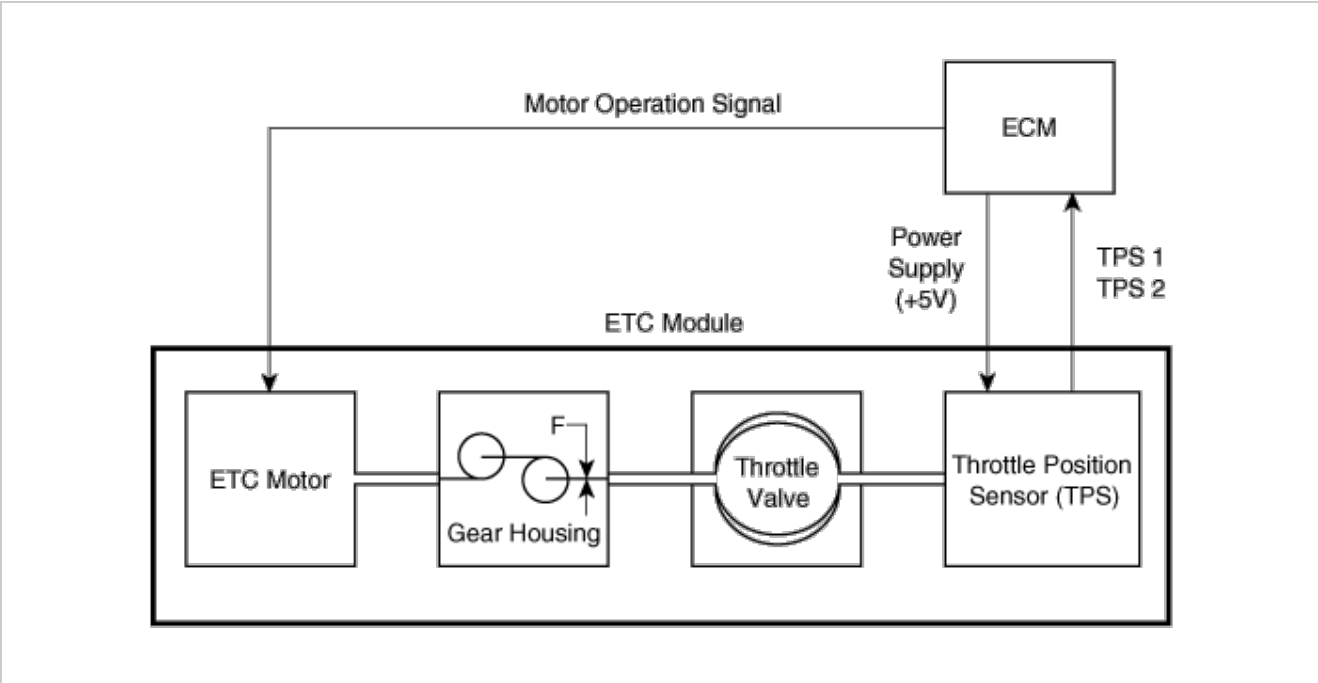

Engine Control/Fuel System

Fail-Safe Mode

Item	Fail-Safe		
ETC Motor	Throttle valve stuck at 7°		
TPS	TPS 1 fault	Replace it with TPS 2	
	TPS 2 fault	Replace it with TPS 1	
	TPS 1,2 fault	Throttle Angle (°)	Throttle valve stuck at 7°
		Duty (%)	• TPS1: 13.37 - 19.37 • TPS2: 80.63 - 86.63
		Output Voltage (V)	• TPS1: 0.67 - 0.97 • TPS2: 4.03 - 4..33
APS	APS 1 fault	Replace it with APS 2	
	APS 2 fault	Replace it with APS 1	
	APS 1,2 fault	Engine idle state	

NOTICE

- When throttle value is stuck at 7°, engine speed is limited at below 1,500rpm and vehicle speed at maximum 40 - 50 km/h (25 - 31 mph)

Engine Control/Fuel System

Specification

[Throttle Position Sensor (TPS)]

Throttle angle(°)	Output Voltage (V) [Vref=5V]	
	TPS1	TPS2
0	0.5	4.5
10	0.96	4.05
20	1.41	3.59
30	1.87	3.14
40	2.32	2.68
50	2.78	2.23
60	3.23	1.77
70	3.69	1.32
80	4.14	0.86
90	4.6	0.41
98	4.65	0.35
C.T (0)	0.5	4.5
W.O.T (86)	4.41	0.59

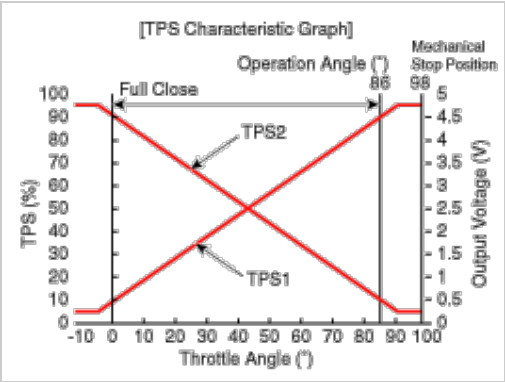

[ETC Motor]

Item	Specification
Coil Resistance (Ω)	0.3 -100 [20°C(68°F)]

Engine Control/Fuel System

Circuit Diagram

[Circuit Diagram]

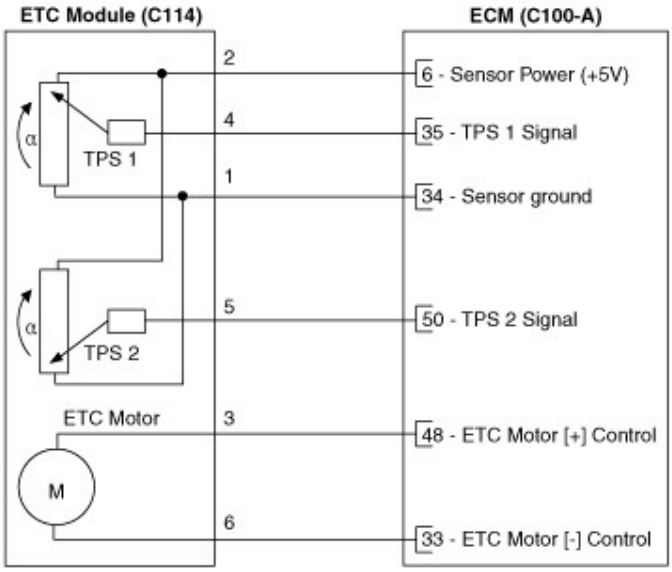

[Connection Information]

Terminal	Connected to	Function
1	ECM C100-A (34)	Sensor ground
2	ECM C100-A (6)	Sensor Power (+5V)
3	ECM C100-A (48)	ETC Motor [+] Control
4	ECM C100-A (35)	TPS 1 Signal
5	ECM C100-A (50)	TPS 2 Signal
6	ECM C100-A (33)	ETC Motor [-] Control

[Harness Connector]

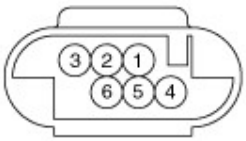

C114
ETC Module

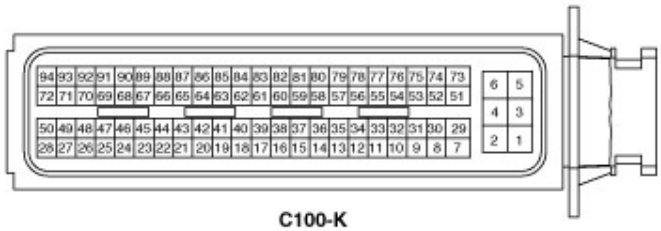

C100-K

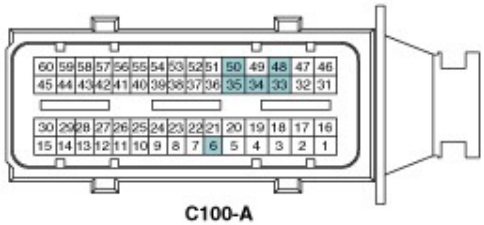

C100-A
ECM

Engine Control/Fuel System

Inspection

Throttle Position Sensor (TPS)

1. Connect the GDS on the Data Link Connector (DLC).
2. Start the engine and measure the output voltage of TPS 1 and 2 at C.T. and W.O.T.

Specification: Refer to “Specification”

ETC Motor

1. Turn the ignition switch OFF.
2. Disconnect the ETC module connector.
3. Measure resistance between the ETC module terminals 1 and 2.
4. Check that the resistance is within the specification.

Specification: Refer to “Specification”

Removal

1. Turn ignition switch OFF and disconnect the negative (-) battery cable.
2. Remove the air cleaner assembly
   (Refer to Engine Mechanical System - "Air Cleaner")
3. Disconnect the ETC module connector (A).
4. Remove the ETC module (B) from the engine after loosening the bolts.

Installation

CAUTION

- Install the component with the specified torques.
- Note that internal damage may occur when the component is dropped. If the component has been dropped, inspect before installing.

1. Install in the reverse order of removal.

Electronic throttle body Installation bolt:
7.8 - 9.8 N.m (0.8 - 1.0 kgf.m, 5.7 - 7.2 lb-ft)

Adjustment

ETC module learning procedure

When installing new ETC module or re-installing it, ETC module learning procedure must be performed.

1. Hold the ignition key or the start button at th IG ON position during 5 seconds.
2. Turn ignition swich OFF and then start the engine.

CAUTION

- DTC codes (P0638, P2110) might be displayed if ETC module learning procedure does not performed after replacing ETC module.

Engine Control/Fuel System

Description

Manifold Absolute Pressure Sensor (MAPS) is a speed-density type sensor and is installed on the surge tank. It senses absolute pressure of the surge tank and transfers the analog signal proportional to the pressure to the ECM. By using this signal, the ECM calculates the intake air quantity and engine speed.

The MAPS consists of a piezo-electric element and a hybrid IC amplifying the element output signal. The element is silicon diaphragm type and adapts pressure sensitive variable resistor effect of semi-conductor. Because 100% vacuum and the manifold pressure apply to both sides of the sensor respectively, this sensor can output analog signal by using the silicon variation proportional to pressure change.

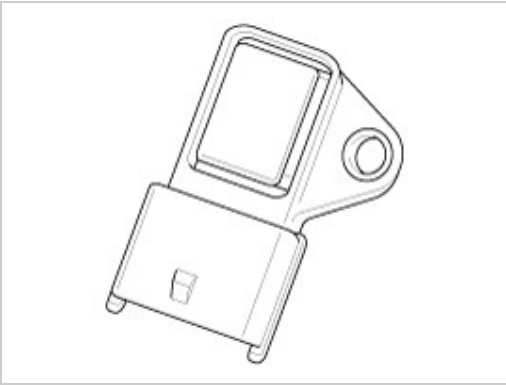

Engine Control/Fuel System

Specification

Pressure [kPa (kgf/cm², psi)]	Output Voltage (V)
20.0 (0.20, 2.9)	0.79
46.7 (0.47, 6.77)	1.84
101.3 (1.03, 14.7)	4.0

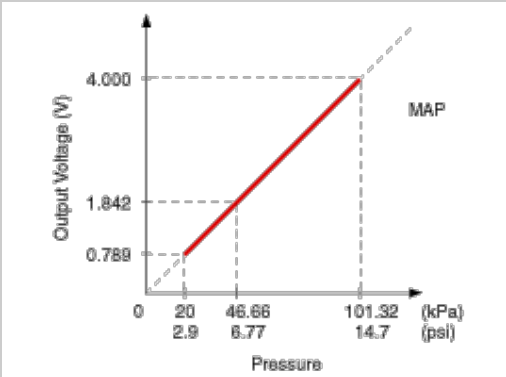

Engine Control/Fuel System

Signal Waveform

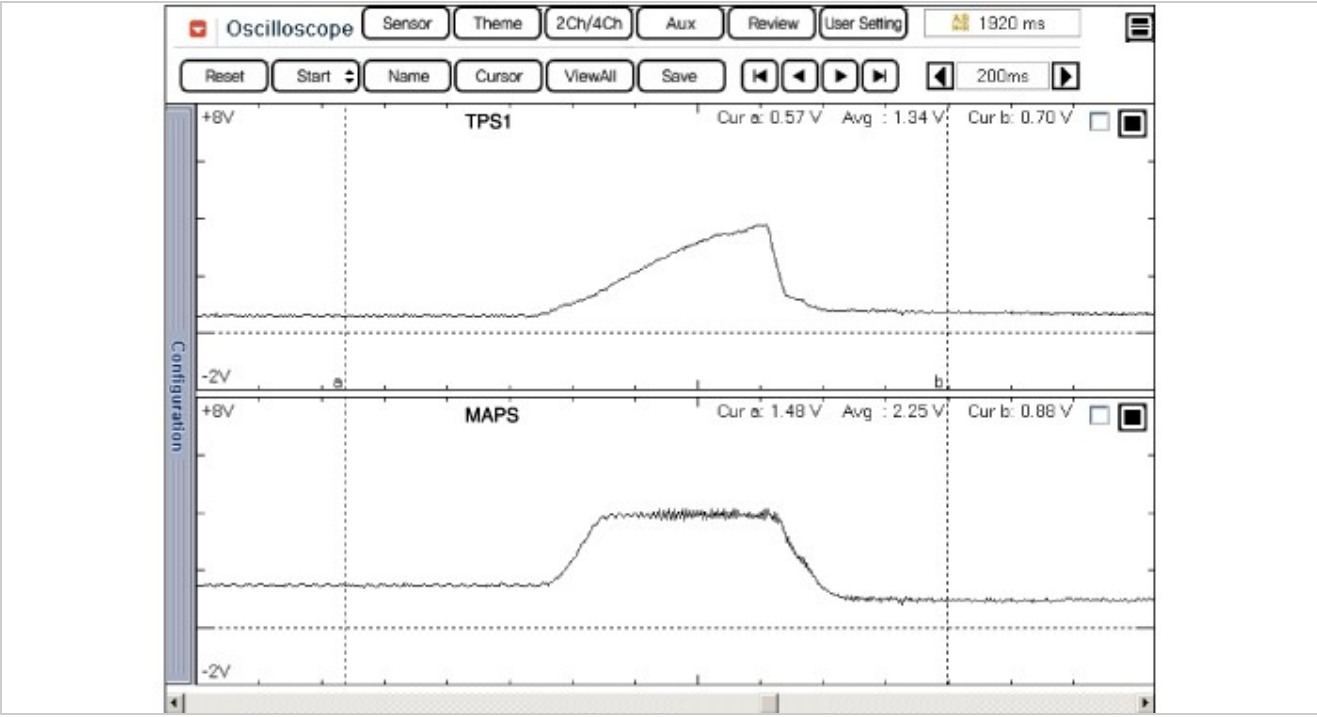

Engine Control/Fuel System

Circuit Diagram

[Circuit Diagram]

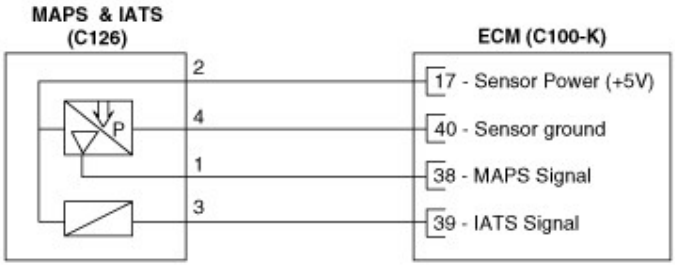

[Connection Information]

Terminal	Connected to	Function
1	ECM C100-K (38)	MAPS Signal
2	ECM C100-K (17)	Sensor Power (+5V)
3	ECM C100-K (39)	IATS Signal
4	ECM C100-K (40)	Sensor ground

[Harness Connector]

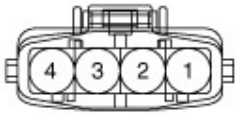

C126
MAPS & IATS

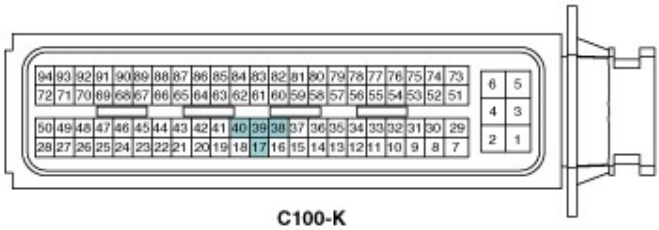

C100-K

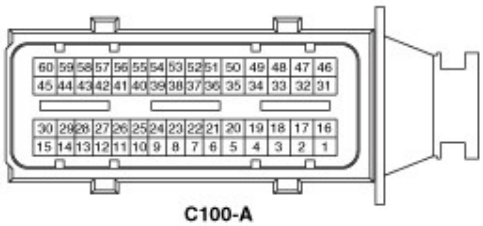

C100-A
ECM

Engine Control/Fuel System

Inspection

1. Connect the GDS on the Data Link Connector (DLC).
2. Measure the output voltage of the MAPS at idle and IG ON.
   Specification: Refer to "Specification"

Removal

1. Turn ignition switch OFF and disconnect the negative (-) battery cable.
2. Remove the air cleaner assembly
   (Refer to Engine Mechanical System - "Air Cleaner")
3. Disconnect the manifold absolute pressure sensor connector (A).
4. Remove the installation bolt (B), and then remove the sensor from the surge tank.

Installation

⚠ CAUTION

- Install the component with the specified torques.
- Note that internal damage may occur when the component is dropped. If the component has been dropped, inspect before installing.

⚠ CAUTION

- Insert the sensor in the installation hole and be careful not to damage.

1. Install in the reverse order of removal.

Manifold absolute pressure sensor installation bolt:
9.8 - 11.8 N.m (1.0 - 1.2 kgf.m, 7.2 - 8.7 lb-ft)

Description

MAFS uses a hot-film type sensing element to measure the mass of intake air entering the engine, and send the signal to ECM.
A large amount of intake air represents acceleration or high load conditions while a small amount of intake air represents deceleration or idle.
The ECM uses this information to control the EGR solenoid valve and correct the fuel amount.

Specifications

Air Flow (kg/h)	Frequency (kHz)
-40	1.49
-20	1.59
-10	1.68
-8	1.7
-6	1.72
0	1.81
6	1.93
8	1.97
10	2.01
20	2.21
40	2.52
60	2.74
90	3.05
120	3.34
140	3.53
160	3.73
250	4.62
310	5.28
370	6.03
440	7.06
560	9.46
640	11.83

Circuit Diagram

[Circuit Diagram]

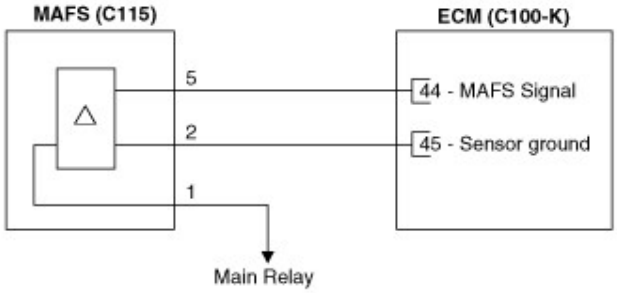

[Connection Information]

Terminal	Connected to	Function
1	Main Relay	Battery Power (B+)
2	ECM C100-K (45)	Sensor ground
3	-	-
4	-	-
5	ECM C100-K (44)	MAFS Signal

[Harness Connector]

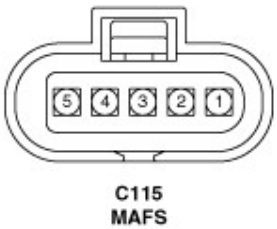

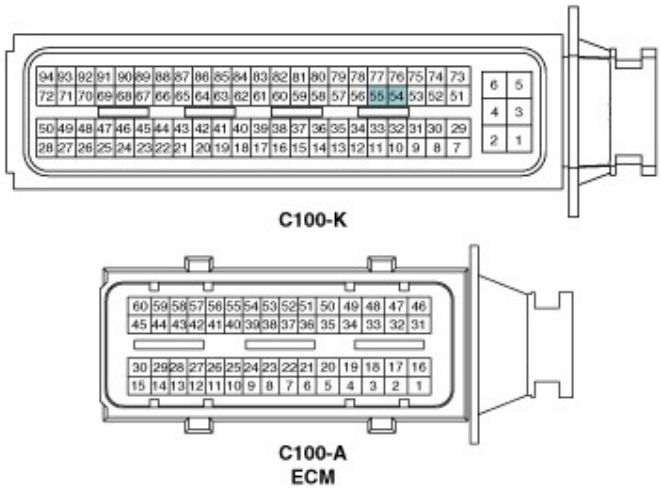

Engine Control/Fuel System

Inspection

1. Check the MAFS visually.
   – Mounting direction correct.
   – Any contamination, corrosion or damage on connector.
   – Air cleaner"s clogging or wet.
   – MAFS cylinder"s deforming or blocking by any foreign material.
2. Check any leakage on intake system and intercooler system.

Removal

1. Turn the ignition switch OFF and disconnect the battery (-) cable.
2. Disconnect the mass air flow sensor connector (A) and the installation clamp (B).
3. Remove the mass air flow sensor (C).

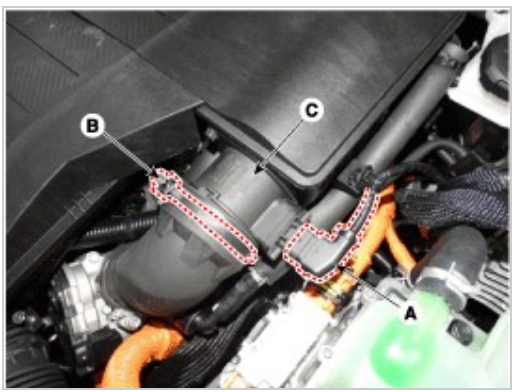

Installation

CAUTION

- Install the component with the specified torques.
- Note that internal damage may occur when the component is dropped. In this case, use it after inspecting.

CAUTION

-

Be careful not to damage the sensing element and the honey cell.

1. Install in the reverse order of removal.

Mass air flow sensor installation bolt:
2.9 - 4.9 N.m (0.3 - 0.5 kgf.m, 2.2 - 3.6 lb-ft)
Mass air flow sensor clamp installation bolt:
2.9 - 4.9 N.m (0.3 - 0.5 kgf.m, 2.2 - 3.6 lb-ft)

Engine Control/Fuel System

Description

Intake Air Temperature Sensor (IATS) is included inside Manifold Absolute Pressure Sensor and detects the intake air temperature.

To calculate precise air quantity, correction of the air temperature is needed because air density varies according to the temperature. So the ECM uses not only MAPS signal but also IATS signal. This sensor has a Negative Temperature Coefficient (NTC) Thermister and it"s resistance changes in reverse proportion to the temperature.

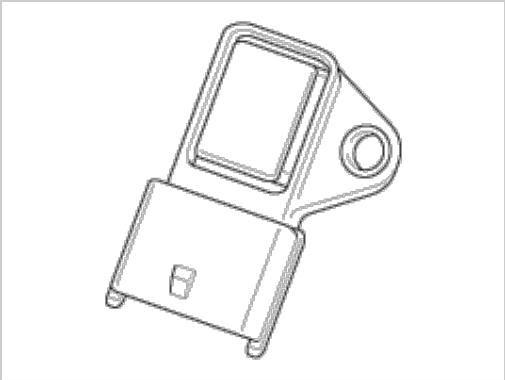

Engine Control/Fuel System

Specification

Temperature		Resistance (kΩ)
°C	°F	
-40	-40	40.93 - 48.35
-20	-4	13.89 - 16.03
0	32	5.38 - 6.09
10	50	3.48 - 3.90
20	68	2.31 - 2.57
40	104	1.08 - 1.21
60	140	0.54 - 0.62
80	176	0.29 - 0.34

Engine Control/Fuel System

Circuit Diagram

[Circuit Diagram]

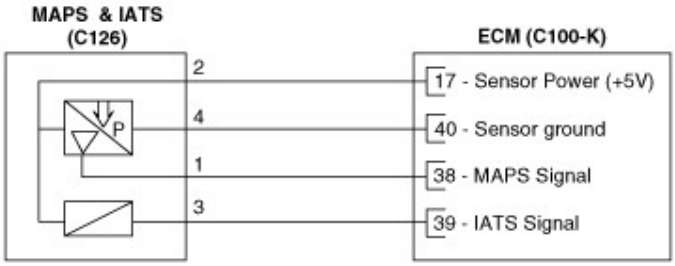

[Connection Information]

Terminal	Connected to	Function
1	ECM C100-K (38)	MAPS Signal
2	ECM C100-K (17)	Sensor Power (+5V)
3	ECM C100-K (39)	IATS Signal
4	ECM C100-K (40)	Sensor ground

[Harness Connector]

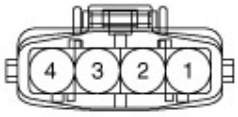

C126
MAPS & IATS

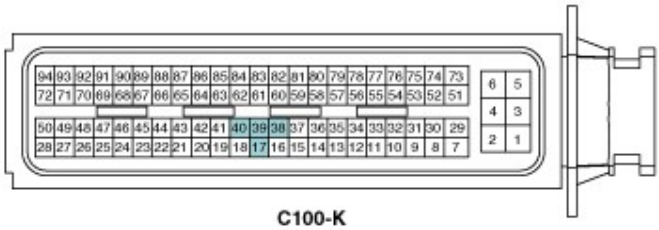

C100-K

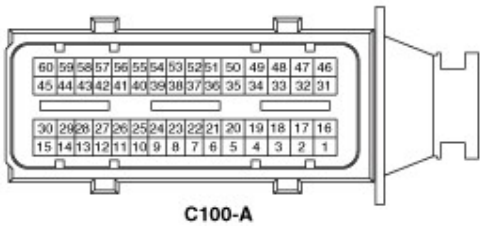

C100-A
ECM

Engine Control/Fuel System

Inspection

1. Turn the ignition switch OFF.
2. Disconnect the IATS connector.
3. Measure resistance between the IATS terminals 3 and 4.
4. Check that the resistance is within the specification.

Specification: Refer to “Specification”

Removal

1. Turn ignition switch OFF and disconnect the negative (-) battery cable.
2. Remove the air cleaner assembly
   (Refer to Engine Mechanical System - "Air Cleaner")
3. Disconnect the manifold absolute pressure sensor connector (A).
4. Remove the installation bolt (B), and then remove the sensor from the surge tank.

Installation

⚠ CAUTION

- Install the component with the specified torques.
- Note that internal damage may occur when the component is dropped. If the component has been dropped, inspect before installing.

⚠ CAUTION

- Insert the sensor in the installation hole and be careful not to damage.

1. Install in the reverse order of removal.

Manifold absolute pressure sensor installation bolt:
9.8 - 11.8 N.m (1.0 - 1.2 kgf.m, 7.2 - 8.7 lb-ft)

Engine Control/Fuel System

Description

Engine Coolant Temperature Sensor (ECTS) is located in the engine coolant passage of the cylinder head for detecting the engine coolant temperature. The ECTS uses a thermistor that changes resistance with the temperature.

The electrical resistance of the ECTS decreases as the temperature increases, and increases as the temperature decreases. The reference +5V is supplied to the ECTS via a resistor in the ECM. That is, the resistor in the ECM and the thermistor in the ECTS are connected in series. When the resistance value of the thermistor in the ECTS changes according to the engine coolant temperature, the output voltage also changes.

During cold engine operation, the ECM increases the fuel injection duration and controls the ignition timing using the information of engine coolant temperature to avoid engine stalling and improve drivability.

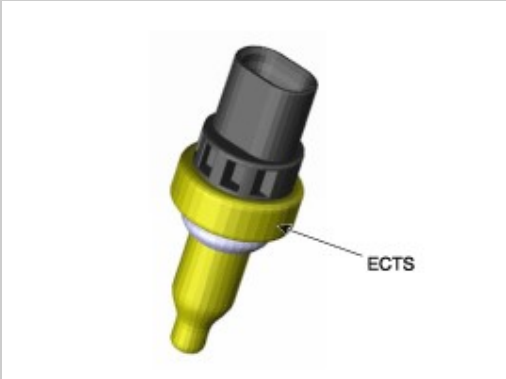

Engine Control/Fuel System

Specification

Temperature		Resistance (kΩ)
°C	°F	
-40	-40	48.14
-20	-4	14.13 - 16.83
0	32	5.79
20	68	2.31 - 2.59
40	104	1.15
60	140	0.59
80	176	0.32

Engine Control/Fuel System

Circuit Diagram

[Water Temperature Control Assembly]

[Circuit Diagram]

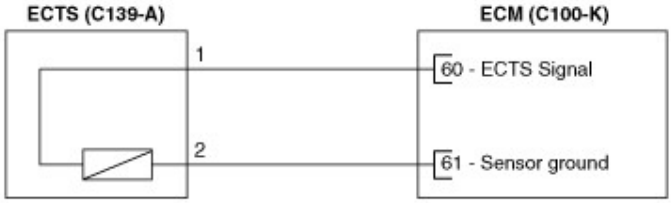

[Connection Information]

Terminal	Connected to	Function
1	ECM C100-K (60)	ECTS Signal
2	ECM C100-K (61)	Sensor ground

[Harness Connector]

C139-A
ECTS

C100-K

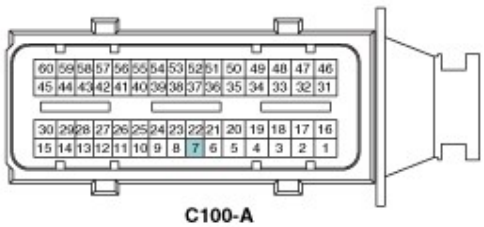

C100-A
ECM

[EGR Cooler Tube]

[Circuit Diagram]

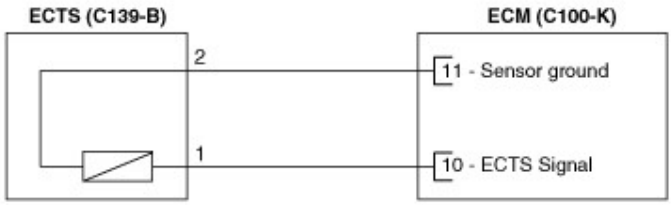

[Connection Information]

Terminal	Connected to	Function
1	ECM C100-K (10)	ECTS Signal
2	ECM C100-K (11)	Sensor ground

[Harness Connector]

C139-B
ECTS

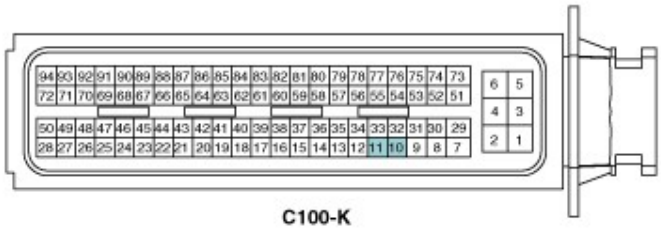

C100-K

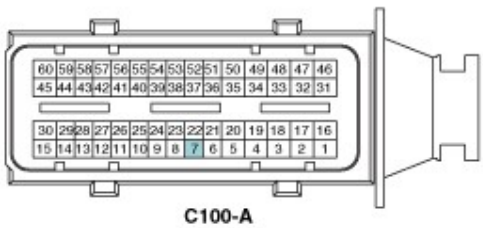

C100-A
ECM

Engine Control/Fuel System

Inspection

1. Turn the ignition switch OFF.
2. Remove the ECTS (Refer to "Removal").
3. After immersing the thermistor of the sensor into engine coolant, measure resistance between the ECTS terminals 1 and 3.
4. Check that the resistance is within the specification.

Specification: Refer to “Specification”

Removal

Engine coolant temperature sensor (ECTS) [Water Temperature Control Assembly]

1. Turn ignition switch OFF and disconnect the negative (-) battery cable.
2. Remove the air cleaner assembly
   (Refer to Engine Mechanical System - "Air Cleaner")
3. Remove the purge control solenoid valve.
   (Refer to Engine Control System - "Purge Control Solenoid Valve (PCSV)")
4. Disconnect the engine coolant temperature sensor connector (A).
5. Remove the engine coolant temperature sensor after removing the fixing pin (B).

NOTICE

- Note that engine coolant may flow out from the water temperature control assembly when removing the sensor.

6. Fill with engine coolant.
   (Refer to Engine Mechanical System - "Coolant")

Engine coolant temperature sensor (ECTS) [EGR Cooler Tube]

1. Turn ignition switch OFF and disconnect the negative (-) battery cable.
2. Remove the air cleaner assembly
   (Refer to Engine Mechanical System - "Air Cleaner")
3. Disconnect the engine coolant temperature sensor connector (A).
4. Remove the engine coolant temperature sensor after removing the fixing pin (B).

NOTICE

- Note that engine coolant may flow out from the EGR cooler tube when removing the sensor.

5. Fill with engine coolant.
   (Refer to Engine Mechanical System - "Coolant")

Installation

⚠ CAUTION

- Install the component with the specified torques.
- Note that internal damage may occur when the component is dropped. If the component has been dropped, inspect before installing.

⚠ CAUTION

- Apply the engine coolant to the O-ring.

⚠ CAUTION

- Insert the sensor in the installation hole and be careful not to damage.

1. Install in the reverse order of removal.

Engine Coolant Temperature Sensor installation :
29.4 - 39.2 N.m (3.0 - 4.0 kgf.m, 21.7 - 28.9 lb-ft)

Engine Control/Fuel System

Description

Crankshaft Position Sensor (CKPS) detects the crankshaft position and is one of the most important sensors of the engine control system. If there is no CKPS signal input, the engine may stop because of CKPS signal missing.

This sensor is installed in ladder frame and generates alternating current by magnetic flux field which is made by the sensor and the target wheel when the engine rotates. The target wheel consists of 58 slots and 2 missing slots on 360 CA (Crank Angle).

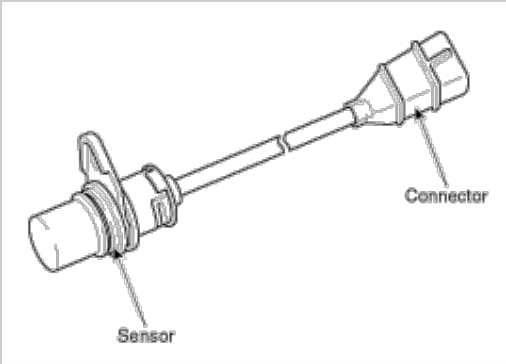

Engine Control/Fuel System

Specification

Item	Specification
Coil Resistance (Ω)	774 - 946 [20°C (68°F)]

Engine Control/Fuel System

Signal Waveform

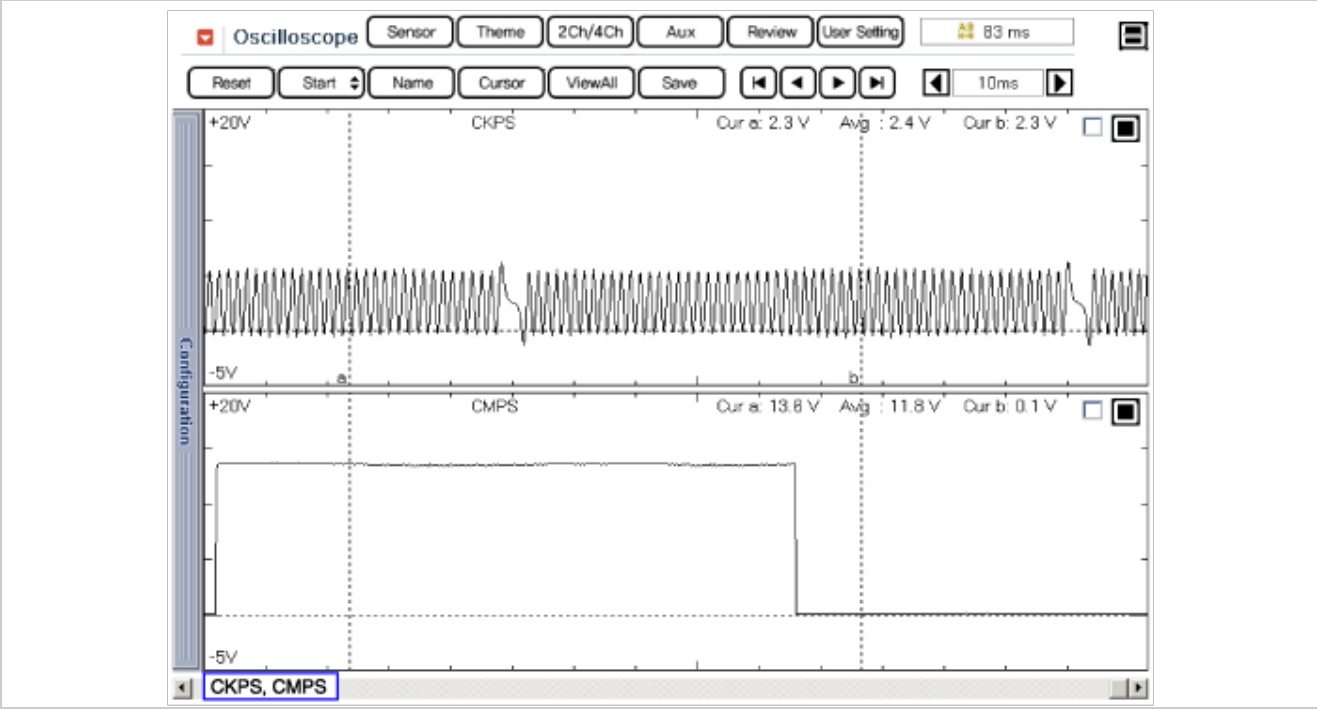

This example shows a typical Crankshaft Position Sensor(CkPS) and Camshaft Position Sensor(CMPS) waveform at idle.The PCM controls the injection and ignition timing by using these signals.

Generally CkPS signal is used to detect the piston''s position and CMPS signal is used to detect the Top Dead Center of each cylinder.

Engine Control/Fuel System

Circuit Diagram

[Circuit Diagram]

[Connection Information]

Terminal	Connected to	Function
1	ECM C100-K (20)	Sensor Power
2	ECM C100-K (32)	CKPS Signal
3	ECM C100-K (54)	Sensor ground

[Harness Connector]

C108
CKPS

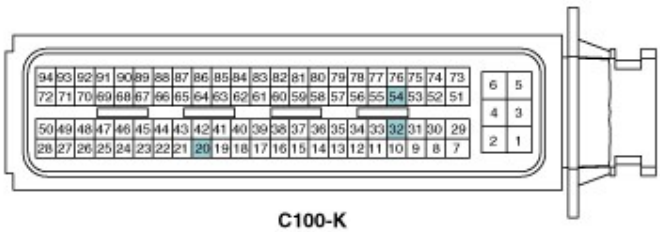

C100-K

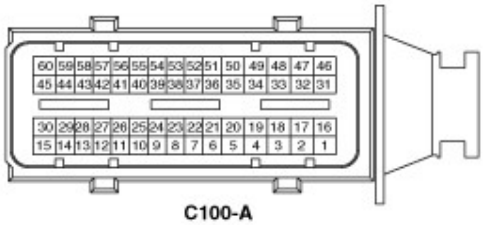

C100-A
ECM

Engine Control/Fuel System

Inspection

1. Check signal waveform of CKPS and CMPS using a GDS.

Specification: Refer to “Waveform”

Removal

1. Turn ignition switch OFF and disconnect the negative (-) battery cable.
2. Disconnect the crankshaft position sensor connector (A).

3. Remove the engine room nuder cover.
   (Refer to Engine Mechanical Sysmte - "Engine Room Under Cover")
4. Remove the crankshaft position sensor (B) after loosening the bolts (A).

Installation

⚠ CAUTION

- Install the component with the specified torques.
- Note that internal damage may occur when the component is dropped. If the component has been dropped, inspect before installing.

⚠ CAUTION

- Apply the engine oil to the O-ring.

⚠ CAUTION

- Insert the sensor in the installation hole and be careful not to damage.

1. Install in the reverse order of removal.

Crankshaft position sensor installation bolt:
7.8 - 11.8 N.m (0.8 - 1.2 kgf.m, 5.8 - 8.7 lb-ft)

Engine Control/Fuel System

Description

Camshaft Position Sensor (CMPS) is a hall sensor and detects the camshaft position by using a hall element.
It is related with Crankshaft Position Sensor (CKPS) and detects the piston position of each cylinder which the CKPS can"t detect.
The CMPS is installed on engine head cover and uses a target wheel installed on the camshaft. The Cam Position sensor is a hall-effect type sensor. As the target wheel passes the Hall sensor, the magnetic field changes in the sensor. The sensor then switches a signal which creates a square wave.

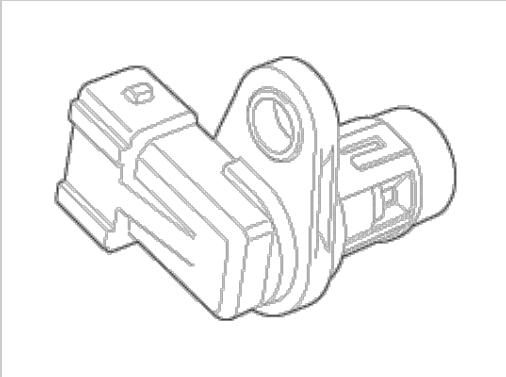

Engine Control/Fuel System

Signal Waveform

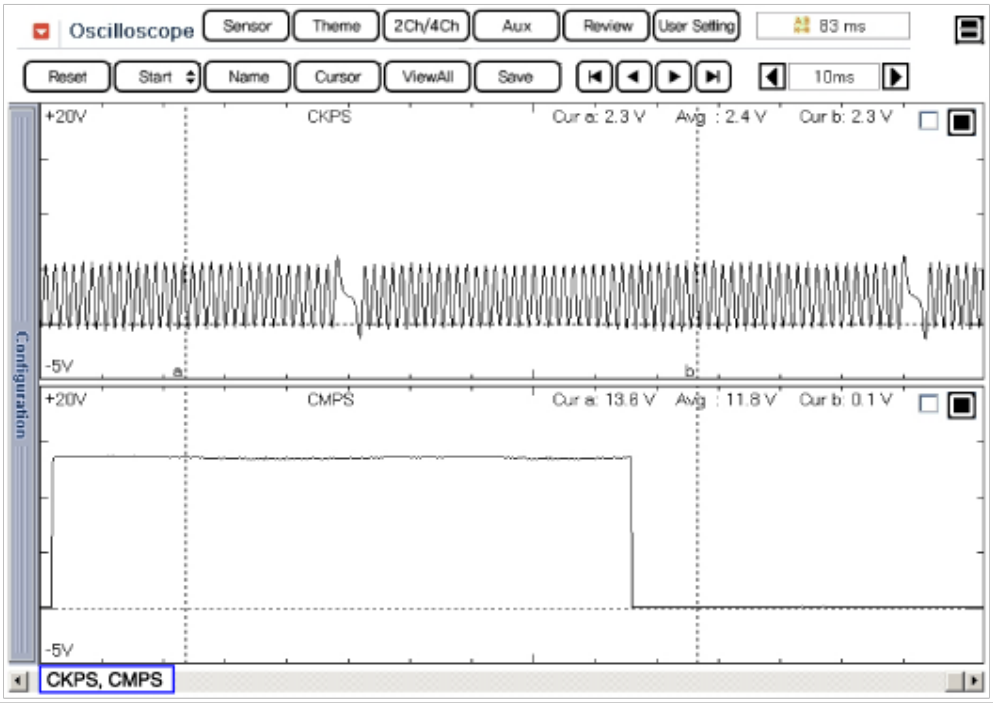

This example shows a typical Crankshaft Position Sensor(CkPS) and Camshaft Position Sensor(CMPS) waveform at idle.The PCM controls the injection and ignition timing by using these signals.
Generally CkPS signal is used to detect the piston"s position and CMPS signal is used to detect the Top Dead Center of each cylinder.

Engine Control/Fuel System

Circuit Diagram

[Circuit Diagram]

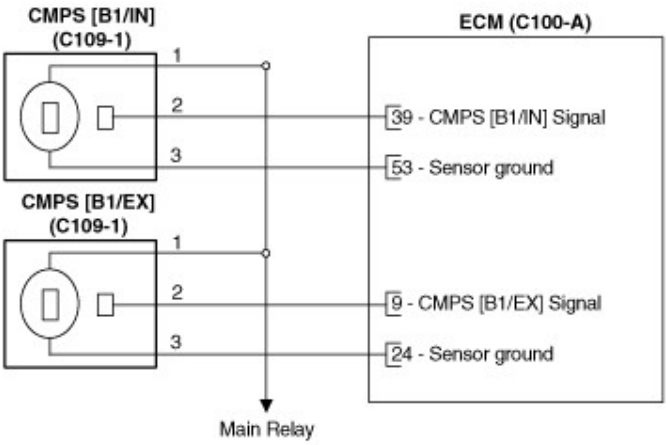

[Connection Information]

CMPS [B1/IN] (C109-1)

Terminal	Connected to	Function
1	Main Relay	Battery Power (B+)
2	ECM C100-A (39)	CMPS [B1/IN] Signal
3	ECM C100-A (53)	Sensor ground

CMPS [B1/EX] (C109-2)

Terminal	Connected to	Function
1	Main Relay	Battery Power (B+)
2	ECM C100-A (9)	CMPS [B1/EX] Signal
3	ECM C100-A (24)	Sensor ground

[Harness Connector]

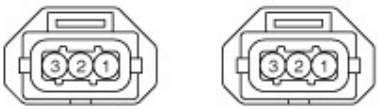

C109-1
CMPS [B1/IN]

C109-2
CMPS [B1/EX]

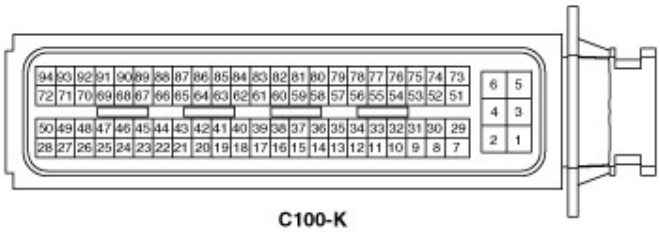

C100-K

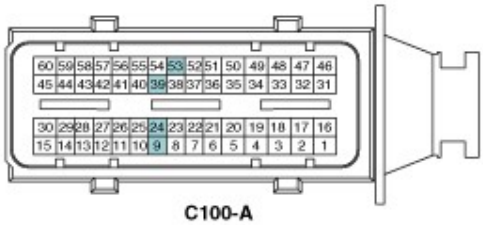

C100-A
ECM

Engine Control/Fuel System

Inspection

1. Check the signal waveform of the CMPS and CKPS using the GDS.

Specification: Refer to “Wave Form”

Removal

⚠ WARNING

- DON’T remove the camshaft position sensor while the engine is running or right after engine is turned off. The part and engine oil is hot and can cause burns.

[Bank 1 / Intake]

1. Turn the ignition switch OFF and disconnect the battery negative (-) cable.
2. Remove the air cleaner assembly
   (Refer to Engine Mechanical System - "Air Cleaner")
3. Disconnect the camshaft position sensor connector (A).
4. Remove the installation bolt (B), and then remove the sensor.

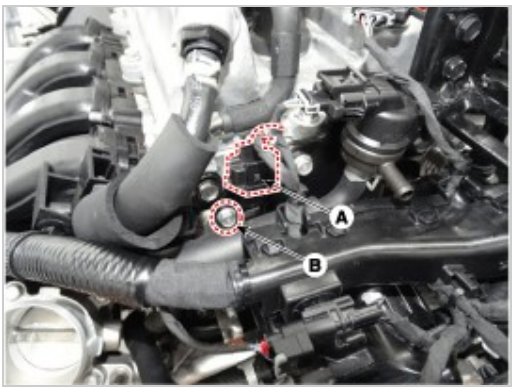

[Bank 1 / Exhaust]

1. Turn the ignition switch OFF and disconnect the battery negative (-) cable.

2. Remove the air cleaner assembly
   (Refer to Engine Mechanical System - "Air Cleaner")
3. Disconnect the camshaft position sensor connector (A).
4. Remove the installation bolt (B), and then remove the sensor.

Installation

CAUTION
- Install the component with the specified torques.
- Note that internal damage may occur when the component is dropped. If the component has been dropped, inspect before installing.

CAUTION
- Apply the engine oil to the O-ring.

CAUTION
- Insert the sensor in the installation hole and be careful not to damage.

CAUTION
- Be careful not to damage the sensor housing and the connector.
- Be careful not to damage the O-ring.

1. Install in the reverse order of removal.
   Camshaft position sensor installation bolt:
   9.8 - 11.8 N.m (1.0 - 1.2 kgf.m, 7.2 - 8.7 lb-ft)

Engine Control/Fuel System

Description

Knocking is a phenomenon characterized by undesirable vibration and noise and can cause engine damage. Knock Sensor (KS) is installed on the cylinder block and senses engine knocking.

When knocking occurs, the vibration from the cylinder block is applied as pressure to the piezoelectric element. When a knock occurs, the sensor produces voltage signal. The ECM retards the ignition timing when knocking occurs. If the knocking disappears after retarding the ignition timing, the ECM will advance the ignition timing. This sequential control can improve engine power, torque and fuel economy.

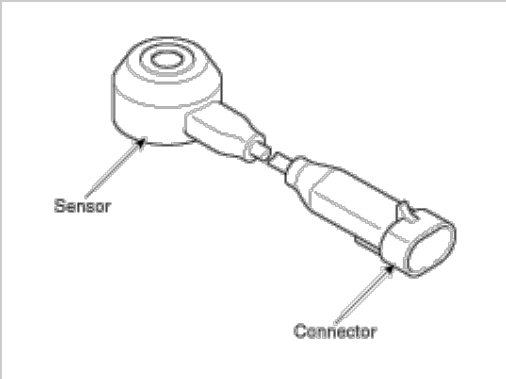

Engine Control/Fuel System

Specification

Item	Specification
Capacitance (pF)	850 - 1,150

Engine Control/Fuel System

Circuit Diagram

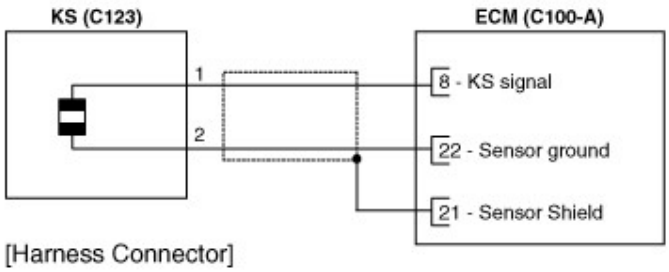

[Connection Information]

Terminal	Connected to	Function
1	ECM C100-A (8)	KS signal
2	ECM C100-A (22)	Sensor ground

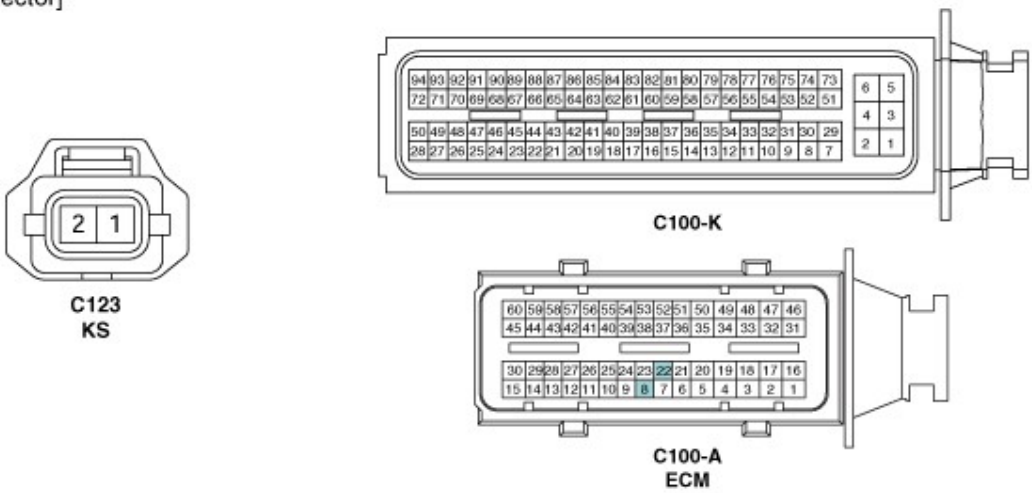

Engine Control/Fuel System

Removal

1. Turn the ignition switch OFF and disconnect the battery negative (-) cable.
2. Remove the intake manifold.
   (Refer to Engine Mechanical System - "Intake Manifold")
3. Remove the installation bolt (A), and then remove the sensor from the cylinder block.

Installation

CAUTION

- Install the component with the specified torques.
- Note that internal damage may occur when the component is dropped. If the component has been dropped, inspect before installing.

1. Install in the reverse order of removal.

Knock sensor installation bolt:
18.6 - 23.5 N.m (1.9 - 2.4 kgf.m, 13.7 - 17.4 lb-ft)

Engine Control/Fuel System

Description

Heated Oxygen Sensor (HO2S) consists of zirconium and alumina and is installed both upstream and downstream of the Manifold Catalytic Converter. The sensor output voltage varies in accordance with the air/fuel ratio.

The sensor must be hot in order to operate normally. To keep it hot, the sensor has a heater which is controlled by the ECM via a duty cycle signal. When the exhaust gas temperature is lower than the specified value, the heater warms the sensor tip.

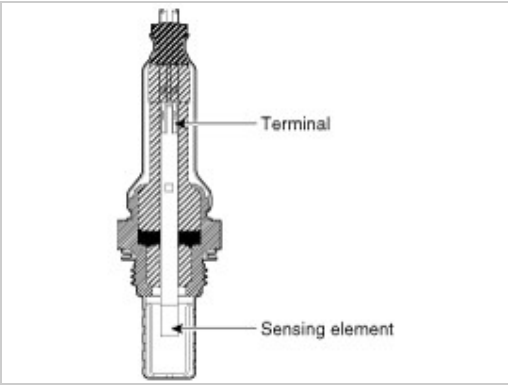

Specification

HO2S [Bank 1/Sensor 1]

Item	Specification
Heater Resistance (Ω)	2.4 - 4.0 [20°C(68°F)]

HO2S [Bank 1/Sensor 2] (Binary type)

A/F Ratio (λ)	Output Voltage(V)
RICH	0.6 - 1.0
LEAN	0 - 0.4

Item	Specification
Heater Resistance (Ω)	Approx. 9.0 [20°C(68°F)]

Circuit Diagram

[Circuit Diagram]

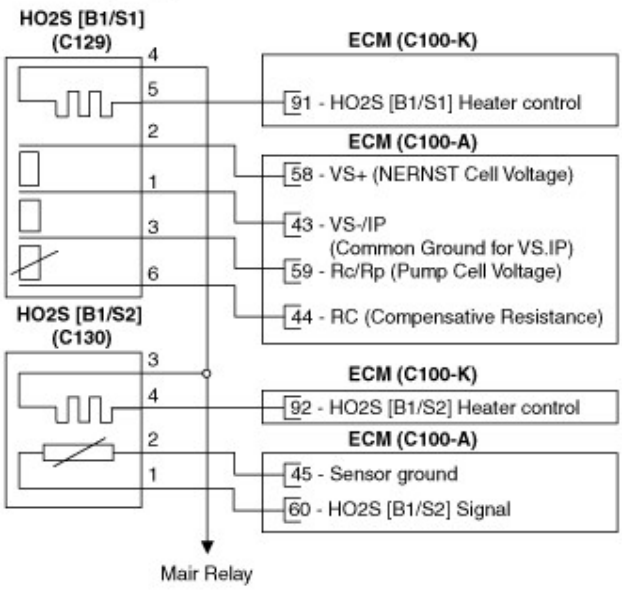

[Connection Information]

HO2S [B1/S1] (C129)

Terminal	Connected to	Function
1	ECM C100-A (43)	VS-/IP (Common Ground for VS.IP)
2	ECM C100-A (58)	VS+ (NERNST Cell Voltage)
3	ECM C100-A (59)	Rc/Rp (Pump Cell Voltage)
4	Mair Relay	Power Supply (B+)
5	ECM C100-K (91)	HO2S [B1/S1]a Heater control
6	ECM C100-A (44)	RC (Compensative Resistance)

HO2S [B1/S2] (C130)

Terminal	Connected to	Function
1	ECM C100-A (60)	HO2S [B1/S2] Signal
2	ECM C100-A (45)	Sensor ground
3	Mair Relay	Power Supply (B+)
4	ECM C100-K (92)	HO2S [B1/S2] Heater control

[Harness Connector]

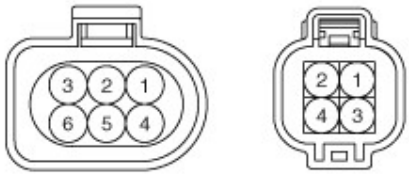

C129
HO2S [B1/S1]

C130
HO2S [B1/S2]

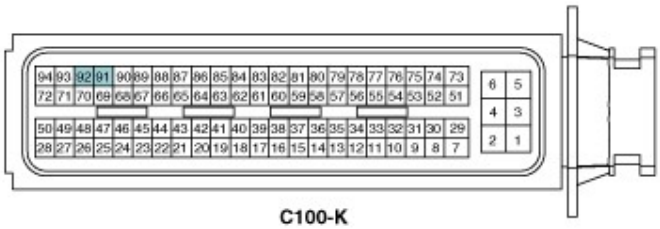

C100-K

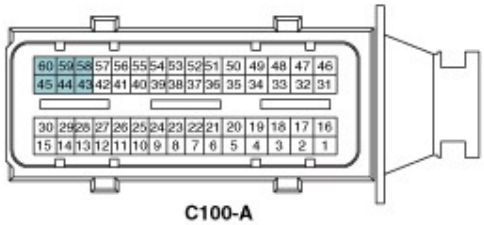

C100-A
ECM

Engine Control/Fuel System

Inspection

1. Turn the ignition switch OFF.
2. Disconnect the HO2S connector.
3. Measure resistance between the HO2S terminals 2 and 5 [B1/S1].
4. Measure resistance between the HO2S terminals 3 and 4 [B1/S2].
5. Check that the resistance is within the specification.

Specification: Refer to “Specification”

Removal

[Bank 1 / Sensor 1]

1. Turn the ignition switch OFF and disconnect the battery negative (-) cable.
2. Disconnect the connector (A), and then remove the sensor (B).

NOTICE

- Note that the SST (Part No.: 09392-1Y100 or 09392-2H100) is useful when removing the heated oxygen sensor.

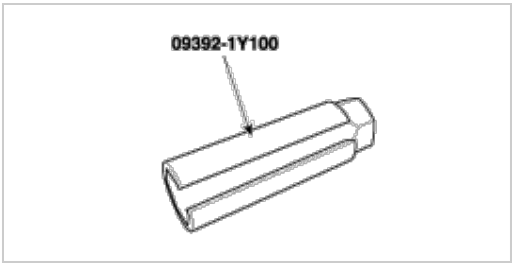

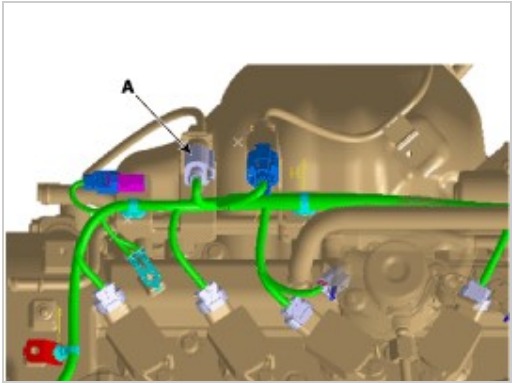

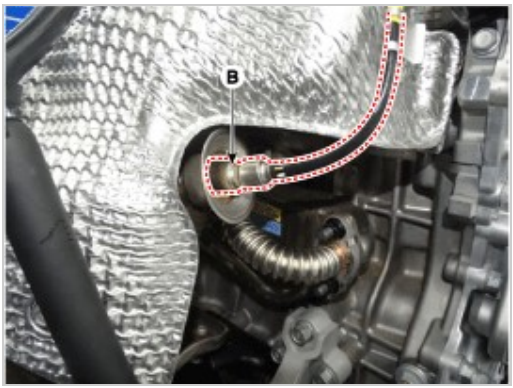

[Bank 1 / Sensor 2]

1. Turn the ignition switch OFF and disconnect the battery negative (-) cable.
2. Disconnect the connector (A), and then remove the sensor (B).

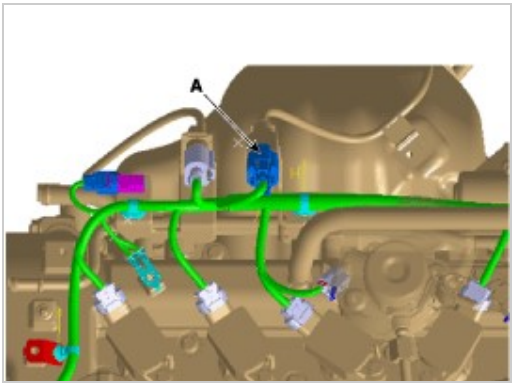

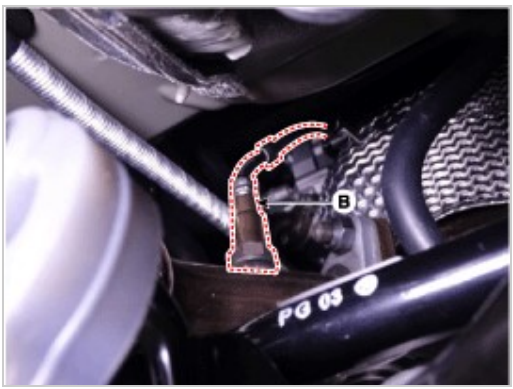

Installation

⚠ CAUTION

- Install the component with the specified torques.
- Note that internal damage may occur when the component is dropped. If the component has been dropped, inspect before installing.

⚠ CAUTION

- DON'T use a cleaner, spray, or grease to sensing element and connector of the sensor because oil component in them may malfunction the sensor performance.
- Sensor and its wiring may be damaged in case of contacting with the exhaust system (Exhaust Manifold, Catalytic Converter, and so on).

1. Install in the reverse order of removal.

Heated oxygen sensor installation:

39.2 - 49.1 N.m (4.0 - 5.0 kgf.m, 28.9 - 36.2 lb-ft)

Description

Rail Pressure Sensor (RPS) is installed on the delivery pipe and measures the instantaneous fuel pressure in the delivery pipe. The sensing element (Semiconductor element) built in the sensor converts the pressure to voltage signal. By using this signal, the ECM can control correct injection amount and timing and adjusts the fuel pressure with the fuel pressure regulator valve if the target pressure and the actual pressure calculated by the RPS output signal are different.

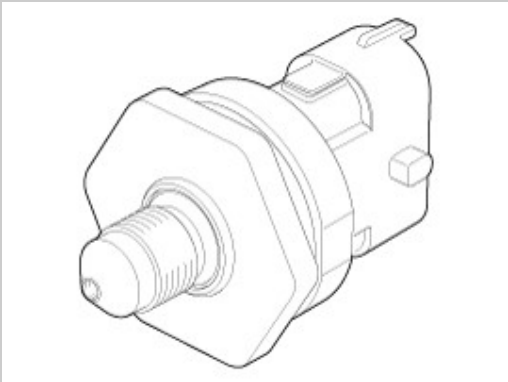

Specification

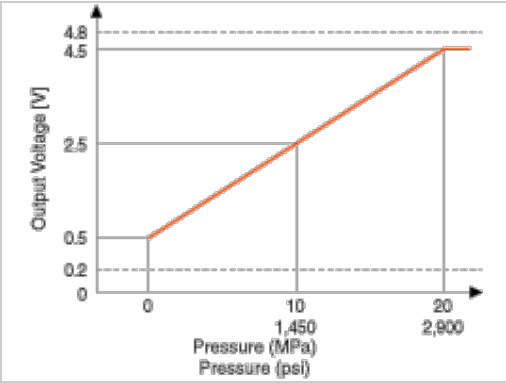

Signal Waveform

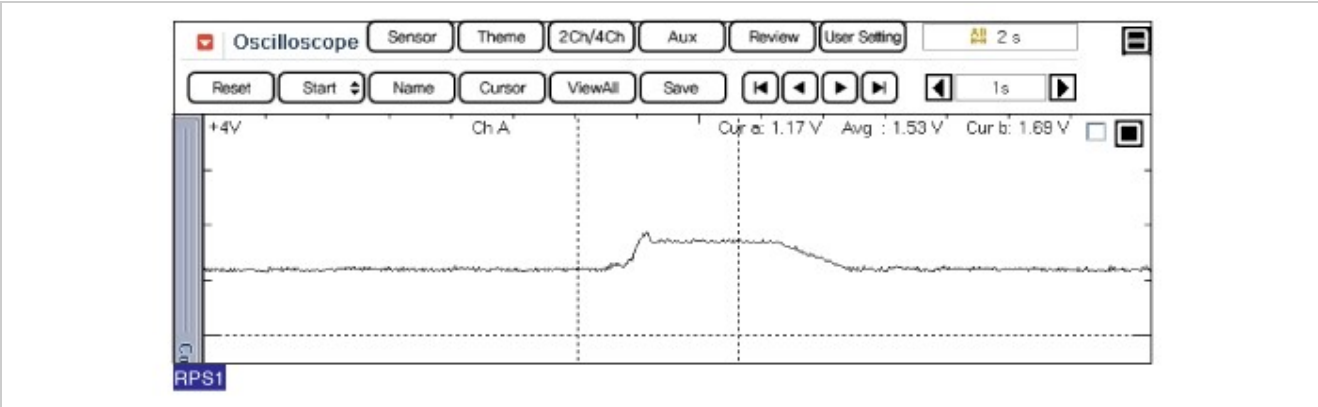

Circuit Diagram

[Circuit Diagram]

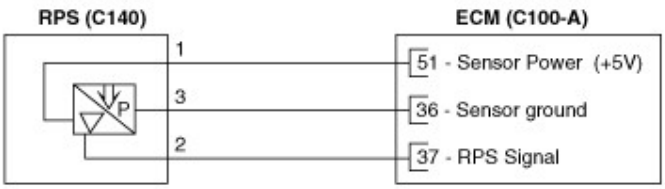

[Connection Information]

Terminal	Connected to	Function
1	ECM C100-A (51)	Sensor Power (+5V)
2	ECM C100-A (37)	RPS Signal
3	ECM C100-A (36)	Sensor ground

[Harness Connector]

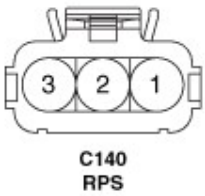

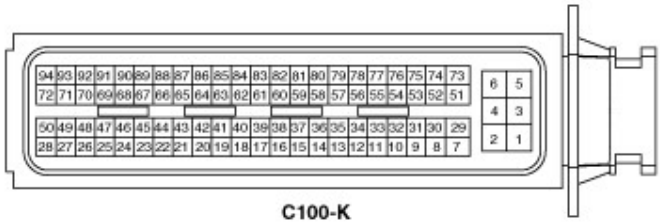

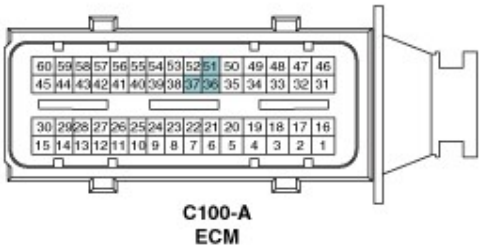

Inspection

1. Connect the GDS on the Data Link Connector (DLC).
2. Measure the output voltage of the RPS at idle and various engine speed.

Condition	Output Voltage (V)
Idle	Approx. 1.2
1,500 rpm	2.2 - 2.5
6,300 rpm	Approx. 3.0

Removal

1. Turn the ignition switch OFF and disconnect the battery negative (-) cable.
2. Release the residual pressure in fuel line.
   (Refer to “Release Residual Pressure in Fuel Line” in this group).

⚠ CAUTION

- When removing the fuel pump relay, a Diagnostic Trouble Code (DTC) may occur. Delete the code with the GDS after completion of “Release Residual Pressure in Fuel Line” work.

3. Remove the intake manifold.
   (Refer to Engine Mechanical System - "Intake Manifold")
4. Disconnect the rail pressure sensor connector (A), and then remove the sensor (B) from the delivery pipe.

Installation

⚠ CAUTION

- Install the component with the specified torques.
- Note that internal damage may occur when the component is dropped. If the component has been dropped, inspect before installing.

1. Install in the reverse order of removal.

Rail Pressure Sensor Installation:
30.0 - 35.0 N.m (3.0 - 3.6 kgf.m, 22.1 - 25.8 lb-ft)

Engine Control/Fuel System

Description

Accelerator Position Sensor (APS) is installed on the accelerator pedal module and detects the rotation angle of the accelerator pedal. The APS is one of the most important sensors in engine control system, so it consists of the two sensors which adapt individual sensor power and ground line. The second sensor monitors the first sensor and its output voltage is half of the first one. If the ratio of the sensor 1 and 2 is out of the range (approximately 1/2), the diagnostic system judges that it is abnormal.

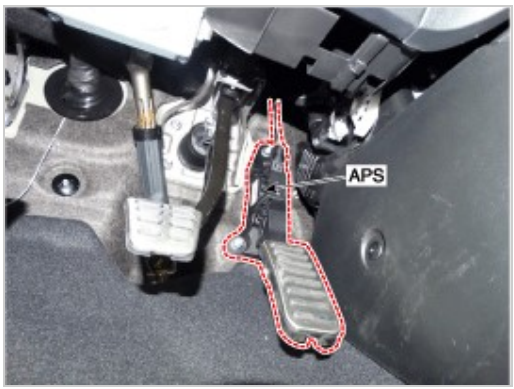

Engine Control/Fuel System

Specification

Accelerator	Output Voltage (V)	
Position	APS1	APS2
C.T	0.7 - 0.8	0.325 - 0.425
W.O.T	3.98 - 4.22	1.98 - 2.13

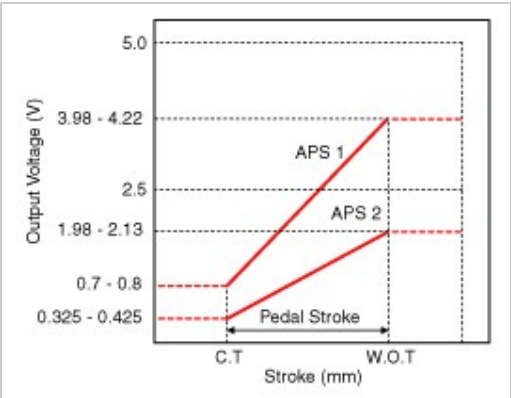

Engine Control/Fuel System

Circuit Diagram

[Circuit Diagram]

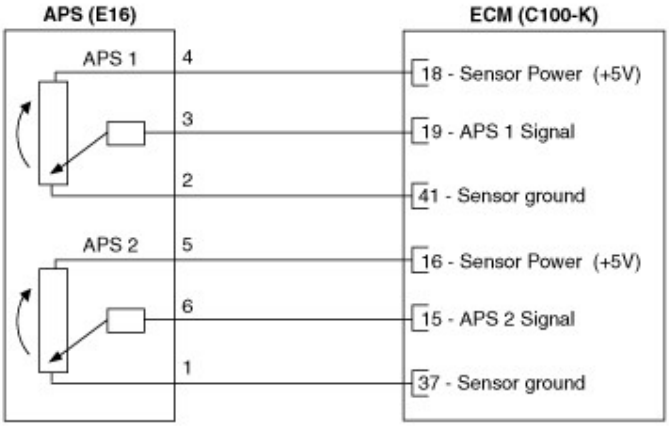

[Connection Information]

Terminal	Connected to	Function
1	ECM C100-K (37)	APS2 Sensor ground
2	ECM C100-K (41)	APS1 Sensor ground
3	ECM C100-K (19)	APS 1 Signal
4	ECM C100-K (18)	APS1 Sensor Power (+5V)
5	ECM C100-K (16)	APS2 Sensor Power (+5V)
6	ECM C100-K (15)	APS 2 Signal

[Harness Connector]

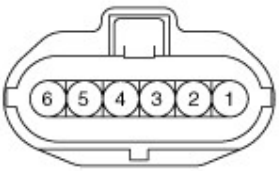

E16
APS

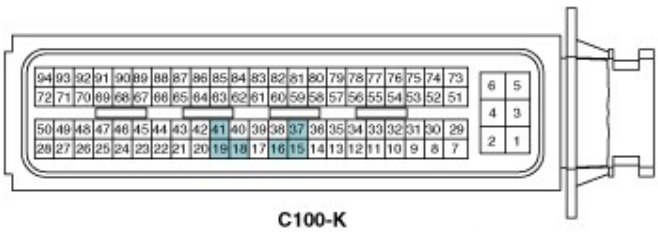

C100-K

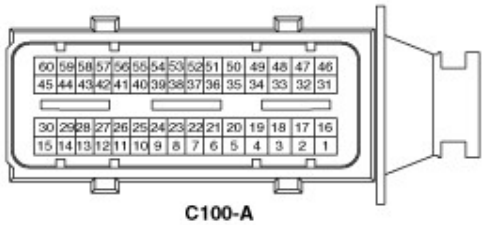

C100-A
ECM

Engine Control/Fuel System

Inspection

1. Connect the GDS on the Data Link Connector (DLC).
2. Turn the ignition switch ON.
3. Measure the output voltage of the APS 1 and 2 at C.T and W.O.T.

Specification: Refer to “Specification”

Engine Control/Fuel System

Description

The GDI injector is similar to a standard injector, but sprays fuel at a much higher pressure directly into the combustion chamber and has a swirl disc to get the fuel swirling as it exits the nozzle. This aids in atomization of the fuel.

The ECM controls both the feed circuits (high side) to feed voltage to the injectors and the ground circuits (low side) to energize the injectors. Also, the feed for 2 injectors comes from the same driver set. As the ignition coils are paired with cylinders (1-4 and 2-3), the injectors are also set up in pairs.

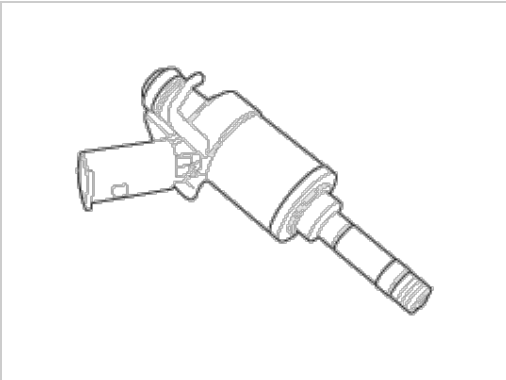

Engine Control/Fuel System

Specification

Item	Specification

Coil Resistance (Ω)	1.425 - 1.575 [20°C(68°F)]

Signal Waveform

The three waveforms below are taken from the #1 and #4 injectors. The top waveform is from the high side (feed side) of the #1 and #4 injectors, while the middle waveform is from the low side (ground side) of the #1 injector and the bottom waveform is from the low side of the #4 injector.

The middle waveform is the same as the top waveform because there is no ground for the circuit. With no current flowing in the circuit, the #1 injector is not energized and fuel does not flow.

The bottom waveform shows that ground is supplied and there is a voltage drop across the #4 injector. With current flowing in the circuit, the #4 injector is energized and fuel flows.

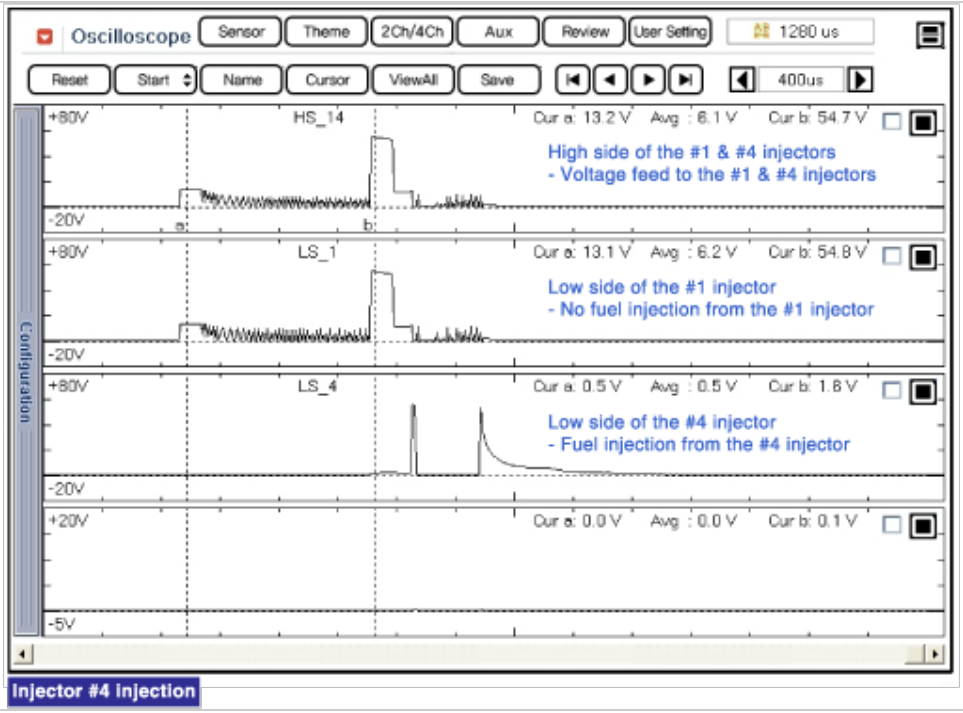

Circuit Diagram

[Circuit Diagram]

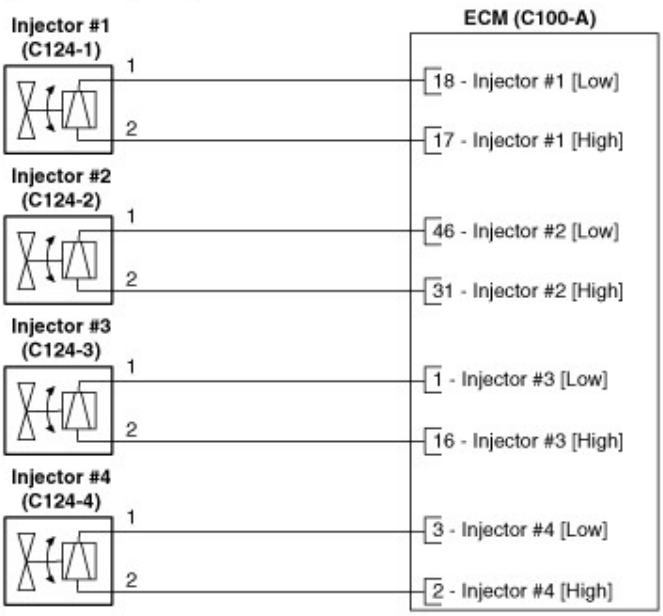

[Connection Information]

Injector #1 (C124-1)

Terminal	Connected to	Function
1	ECM C100-A (18)	Injector #1 [Low] Control
2	ECM C100-A (17)	Injector #1 [High] Control

Injector #2 (C124-2)

Terminal	Connected to	Function
1	ECM C100-A (46)	Injector #2 [Low] Control
2	ECM C100-A (31)	Injector #2 [High] Control

Injector #3 (C124-3)

Terminal	Connected to	Function
1	ECM C100-A (1)	Injector #3 [Low] Control
2	ECM C100-A (16)	Injector #3 [High] Control

Injector #4 (C124-4)

Terminal	Connected to	Function
1	ECM C100-A (3)	Injector #4 [Low] Control
2	ECM C100-A (2)	Injector #4 [High] Control

[Harness Connector]

C124-1,2,3,4
Injector #1,2,3,4

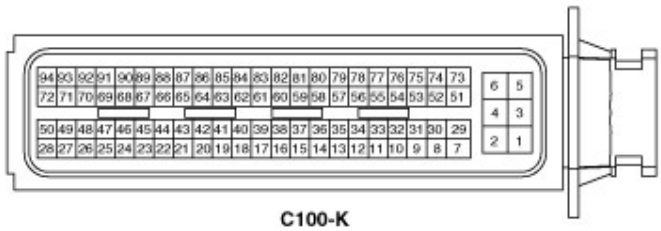

C100-K

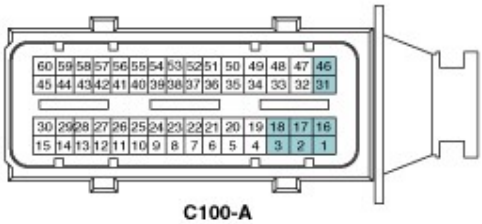

C100-A
ECM

Engine Control/Fuel System

Inspection

1. Turn the ignition switch OFF.
2. Disconnect the injector connector.
3. Measure resistance between the injector terminals 1 and 2.
4. Check that the resistance is within the specification.

Specification: Refer to “Specification”

Removal

WARNING

- In case of removing the high pressure fuel pump, high pressure fuel pipe, delivery pipe, and injector, there may be injury caused by leakage of the high pressure fuel. So don’t do any repair work right after engine stops.

1. Turn the ignition switch OFF and disconnect the battery negative (-) cable.
2. Release the residual pressure in fuel line (Refer to “Release Residual Pressure in Fuel Line” in this group).

CAUTION

- When removing the fuel pump fuse, a Diagnostic Trouble Code (DTC) may occur. Delete the code with the GDS after completion of “Release Residual Pressure in Fuel Line” work.

3. Remove the delivery pipe & injector assembly (Refer to "Delivery Pipe" in this group).
4. Remove the connector (A) and the fixing clip (B), and then separate the injector from the delivery pipe.

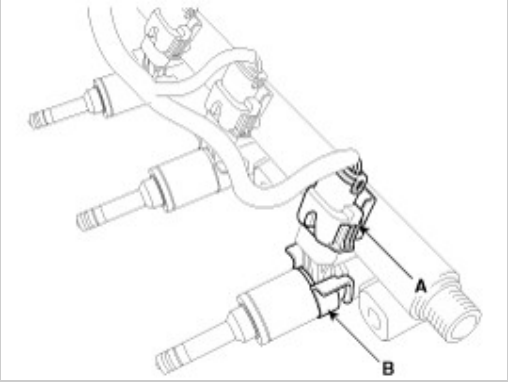

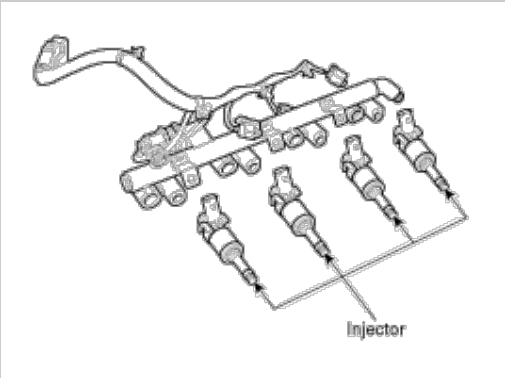

Installation

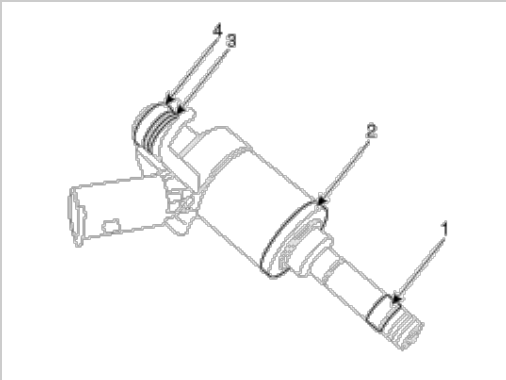

1) Combustion seal
2) Rubber washer
3) Support disc
4) O-ring

⚠ CAUTION
- Do not reuse the used injector fixing clip.

⚠ CAUTION
- Install the component with the specified torques.
- Note that internal damage may occur when the component is dropped. If the component has been dropped, inspect before installing.

⚠ CAUTION
- Apply engine oil to the injector O-ring.
- Do not reuse the used injector O-ring.

⚠ CAUTION
- Do not reuse the used bolt.

⚠ CAUTION
- When inserting the injector, be careful not to damage the injector tip.

⚠ CAUTION
- Do not reuse the support disc.

- Do not reuse the injector rubber washer.
- When replacing the rubber washer, the steal plate (A) part should be faced the cylinder installation part and the rubber plate (B) part should be faced the injector body part.

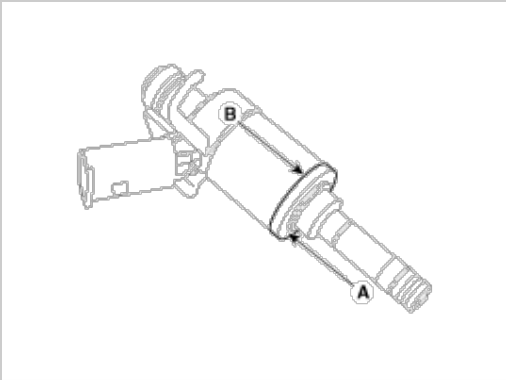

CAUTION

- Do not reuse the combustion seal.

1. Install in the reverse order of removal.

Replacement

The injector combustion seal should be replaced new one to prevent leakage after removing the injector.

1. Remove the combustion seal (A) with a wire cutter.

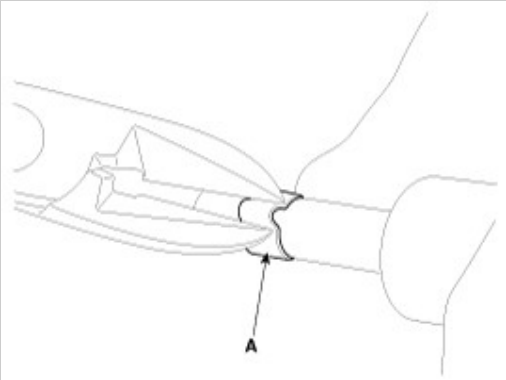

CAUTION

- Grip the sealing ring carefully, pull it to form a small loop and then cut it.
- Be careful not to damage the surface of the valve sleeve with the wire cutter.

2. Before the assembly of the sealing ring the groove must be cleaned using a clean cloth.
   Any coking of the injector sealing surface must be carefully removed with a brass-wire brush.

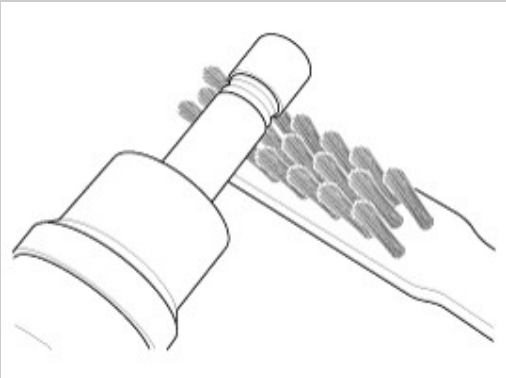

CAUTION

- The surfaces of the new sealing ring must be clean and free of grease.

3. Place the seal installing guide (B) (SST No.: 09353-2B000) on the tip of the injector not to damage the injector tip (A).
   Push the sealing ring (C) with thumb and index finger over the conical assembly tool until it snaps into the groove.
   The complete assembly must not take longer than 2 to 3 seconds.

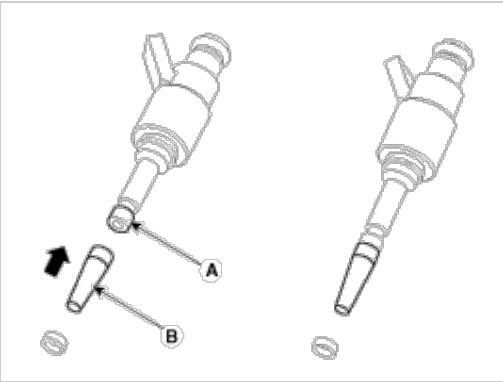

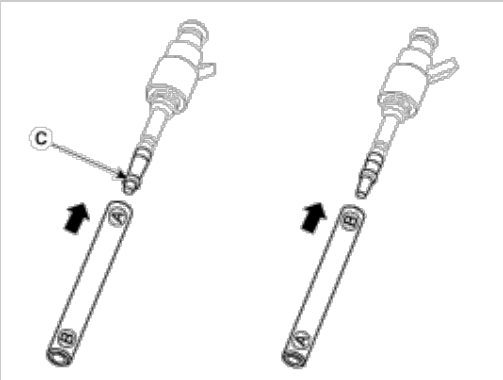

4. To size the sealing ring the injector is first introduced into the sizing tool (A) (SST No.: 09353-2B000) and then pressed and at the same time rotated 180° into the sizing tool.

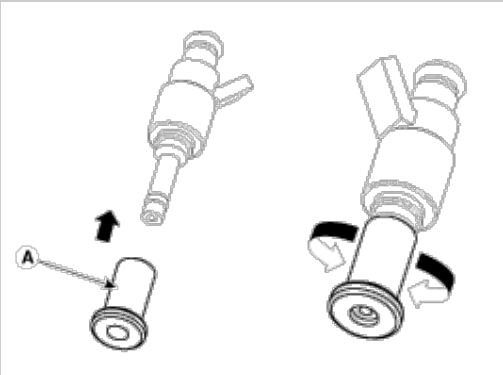

5. Pull the injector out of the sizing tool by turning it in the reverse direction to that used for the press-in process.

⚠ CAUTION

- Check that the seal ring has not been damaged during assembly to the injector and that no circumferential scratches are present.
- Do not reuse the combustion seal.
- The seal must be completely free of grease and oil.

6. Check the combustion seal (A) installation.

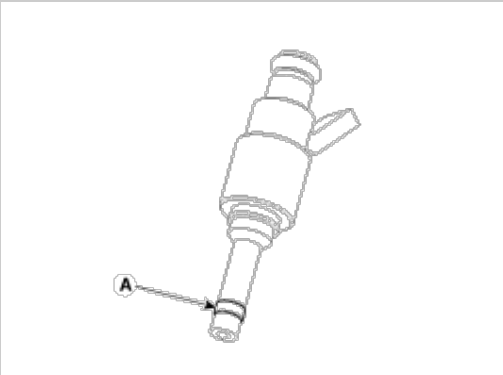

Engine Control/Fuel System

Description

Fuel Tank Pressure Sensor (FTPS) is a component of the evaporative emission control system and is installed on the fuel tank, the fuel pump, or the canister. It checks the purge control solenoid valve operation and detects a leakage of the system.

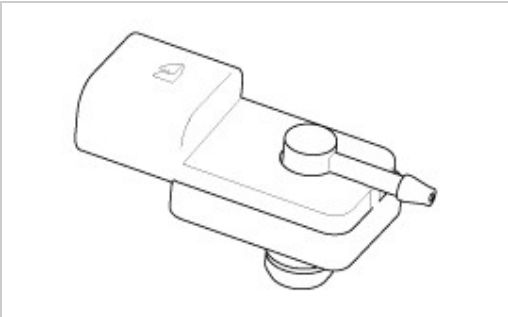

Engine Control/Fuel System

Specification

Pressure [kPa (kgf/cm², in H2O)	Output Voltage (V)
-6.67 (-0.068, -26.8)	0.5
0	2.5
+6.67 (0.068, 26.8)	4.5

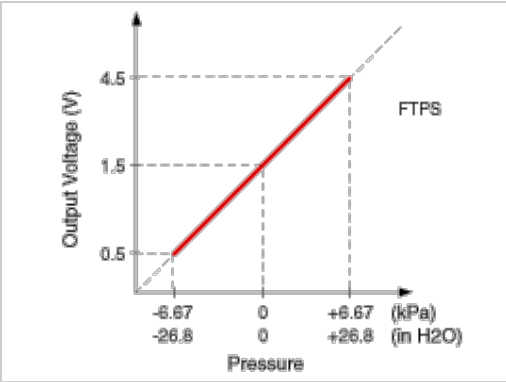

Engine Control/Fuel System

Circuit Diagram

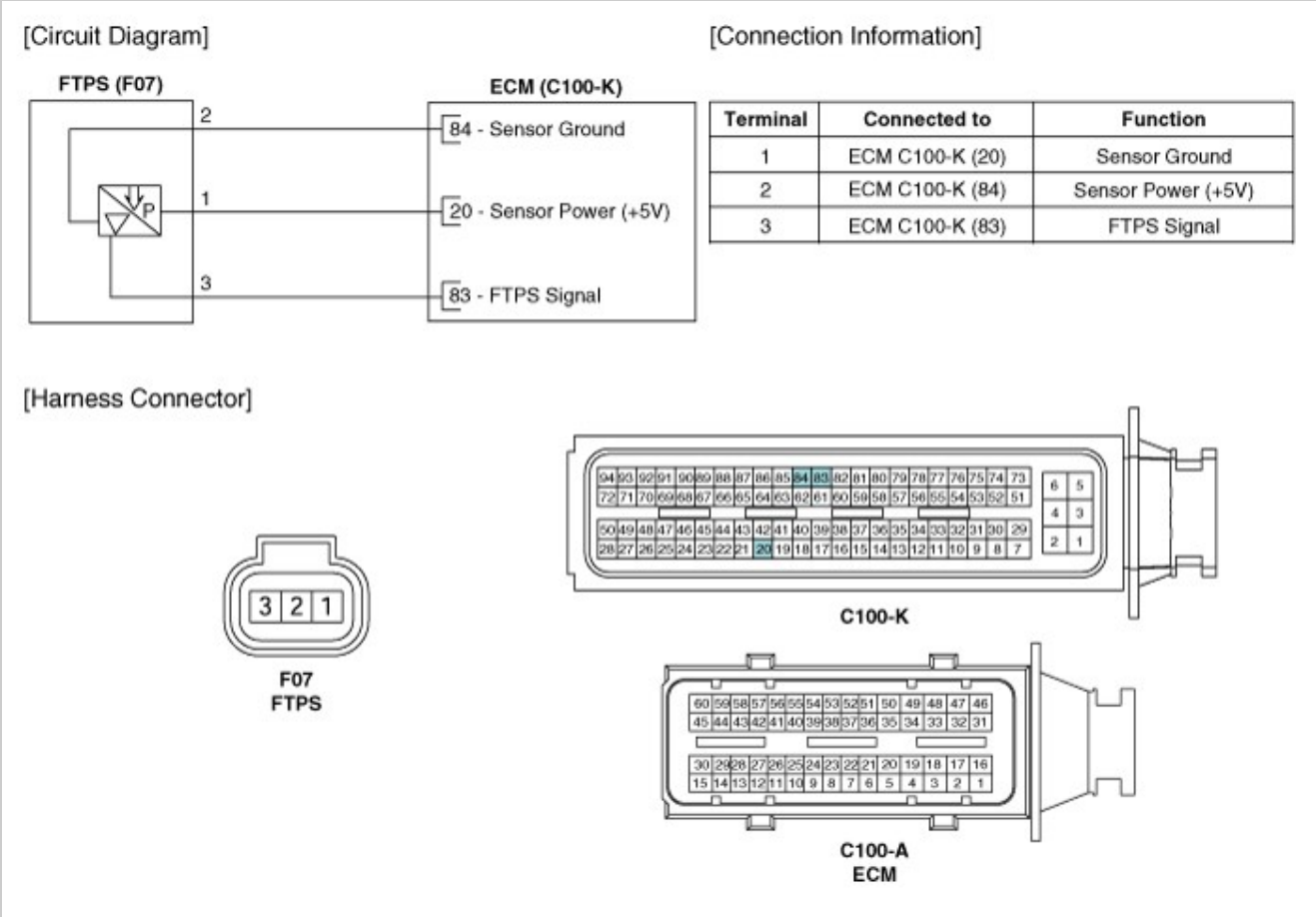

Terminal	Connected to	Function
1	ECM C100-K (20)	Sensor Ground
2	ECM C100-K (84)	Sensor Power (+5V)
3	ECM C100-K (83)	FTPS Signal

Engine Control/Fuel System

Inspection

1. Connect the GDS on the Data Link Connector (DLC).

2. Measure the output voltage of the FTPS.

Specification: Refer to "Specification"

Removal

1. Turn the ignition switch OFF and disconnect the battery negative (-) cable.
2. Remove the rear seat.
   (Refer to Body - "Rear Seat Assembly")
3. Remove the fuel pump service cover (A).

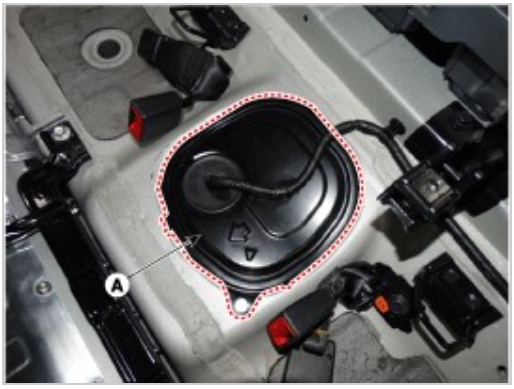

NOTICE

- When reinstalling a protective cover for a fuel pump, remove the existing butyl tape and apply a new one.
- Before assembling the protective cover, ensure that the temperature of the butyl is about 30°C using a hair dryer or a heat gun.

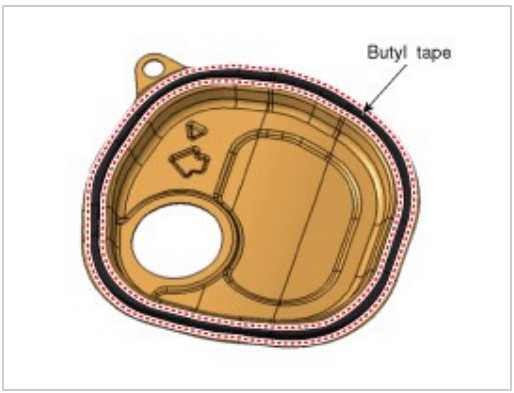

NOTICE

- When installing the protective cover for the fuel pump, pay attention to the installation direction of the grommet and the protective cover.
  – The arrow (A) should be in the forward direction of the car.
  – Align the bulging part of the vehicle body (B) with the hole of the protective cover.
  – Align the bulging part of the grommet (C) with the bulging part of the protective cover.

4. Disconnect the fuel tank pressure sensor connector (A).

5. Remove the fuel tank pressure sensor (B) after releasing the hooks vertically.

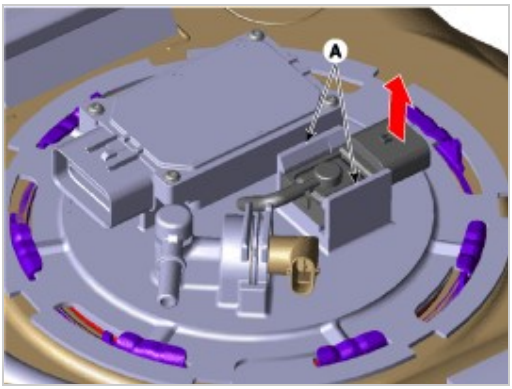

Installation

CAUTION

- Install the component with the specified torques.
- Note that internal damage may occur when the component is dropped. In this case, use it after inspecting.

CAUTION

- Insert the sensor in the installation hole and be careful not to damage when installation.

1. Install in the reverse order of removal.

Engine Control/Fuel System

Description

Purge Control Solenoid Valve (PCSV) is installed on the surge tank and controls the passage between the canister and the intake manifold. It is a solenoid valve and is open when the ECM grounds the valve control line. When the passage is open (PCSV ON), fuel vapor stored in the canister is transferred to the intake manifold.

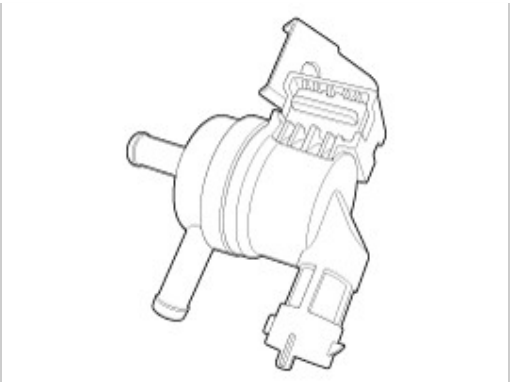

Engine Control/Fuel System

Specification

Item	Specification
Coil Resistance (Ω)	22.0 - 26.0 [20°C(68°F)]

Engine Control/Fuel System

Circuit Diagram

[Circuit Diagram]

[Connection Information]

Terminal	Connected to	Function
1	Main Relay	Battery Power (B+)
2	ECM C100-K (93)	PCSV Control

[Harness Connector]

C110
PCSV

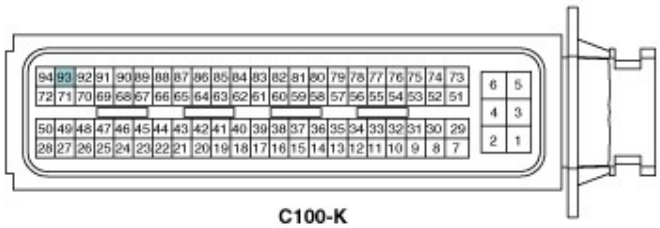

C100-K

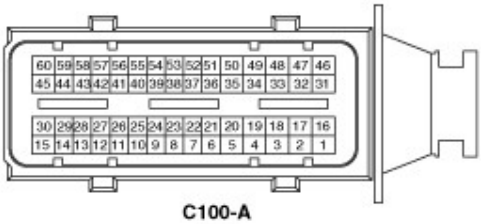

C100-A
ECM

Engine Control/Fuel System

Inspection

1. Turn the ignition switch OFF.
2. Disconnect the PCSV connector.
3. Measure resistance between the PCSV terminals 1 and 2.
4. Check that the resistance is within the specification.

Specification: Refer to “Specification”

Removal

1. Turn the ignition switch OFF and disconnect the battery negative (-) cable.
2. Remove the air cleaner assembly
   (Refer to Engine Mechanical System - "Air Cleaner")
3. Disconnect the purge control solenoid valve connector (A).
4. Disconnect the vapor hose (B) from the purge control solenoid valve.
5. Remove the purge control solenoid valve.

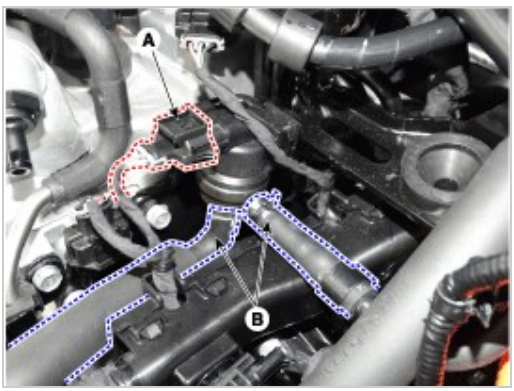

Installation

⚠ CAUTION

- Note that internal damage may occur when the component is dropped. If the component has been dropped, inspect before installing.

⚠ CAUTION

- Use care to keep foreign material out of the valve.

1. Install in the reverse order of removal.

Description

Continuous Variable Valve Timing (CVVT) system advances or retards the valve timing of the intake and exhaust valve in accordance with the ECM control signal which is calculated by the engine speed and load.

By controlling CVVT, the valve over-lap or under-lap occurs, which makes better fuel economy and reduces exhaust gases (NOx, HC) and improves engine performance through reduction of pumping loss, internal EGR effect, improvement of combustion stability, improvement of volumetric efficiency, and increase of expansion work.

This system consist of the CVVT Oil Control Valve (OCV) which supplies the engine oil to the cam phaser or cuts the engine oil from the cam phaser in accordance with the ECM PWM (Pulse With Modulation) control signal, the CVVT Oil Temperature Sensor (OTS) which measures the engine oil temperature, and the Cam Phaser which varies the cam phase by using the hydraulic force of the engine oil.

The engine oil getting out of the CVVT oil control valve varies the cam phase in the direction (Intake Advance/Exhaust Retard) or opposite direction (Intake Retard/Exhaust Advance) of the engine rotation by rotating the rotor connected with the camshaft inside the cam phaser.

[CVVT Oil Control Solenoid (Intake)]

[CVVT Oil Control Valve(Exhaust)]

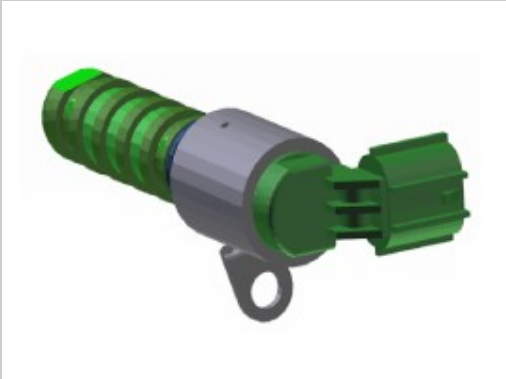

Specification

CVVT Oil Control Solenoid (OCS) [Intake]

▷ Specification

Item	Specification
Coil Resistance (Ω)	5.8 - 6.8 [20°C(68°F)]

CVVT Oil Control Valve (OCV) [Exhaust]

▷ Specification

Item	Specification
Coil Resistance (Ω)	6.9 - 7.9 [20°C(68°F)]

Circuit Diagram

[Circuit Diagram]

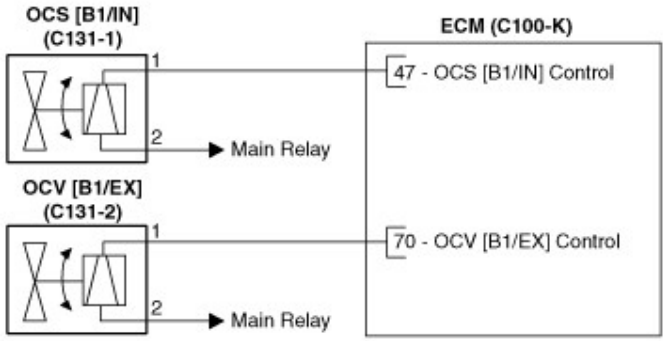

[Connection Information]

OCS [B1/IN] (C131-1)

Terminal	Connected to	Function
1	ECM C100-K (47)	OCS [B1/IN] Control
2	Main Relay	Battery Power (B+)

OCV [B1/EX] (C131-2)

Terminal	Connected to	Function
1	ECM C100-K (70)	OCV [B1/EX] Control
2	Main Relay	Battery Power (B+)

[Harness Connector]

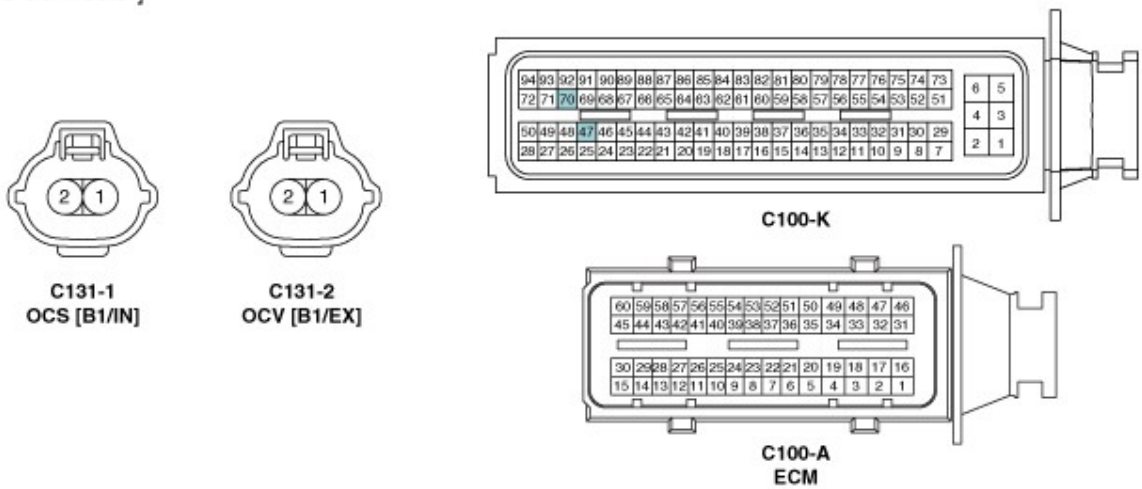

Engine Control/Fuel System

Inspection

1. Turn the ignition switch OFF.
2. Disconnect the OCV connector.
3. Measure resistance between the OCV terminals 1 and 2.
4. Check that the resistance is within the specification.

Specification: Refer to “Specification”

Removal

[CVVT Oil Control Solenoid (Intake)]

1. Turn the ignition switch OFF and disconnect the battery negative (-) cable.
2. Disconnect the CVVT oil control solenoid (A).
3. Remove the installation bolt (B), and then remove the CVVT oil control solenoid from the enigne.

[CVVT Oil Control Valve (Exhaust)]

1. Turn the ignition switch OFF and disconnect the battery negative (-) cable.
2. Remove the air cleaner assembly
   (Refer to Engine Mechanical System - "Air Cleaner")

3. Disconnect the CVVT oil control solenoid (A).
4. Remove the installation bolt (B), and then remove the CVVT oil control solenoid from the enigne.

Installation

CAUTION

- Install the component with the specified torques.
- Note that internal damage may occur when the component is dropped. If the component has been dropped, inspect before installing.

CAUTION

- Apply engine oil to the valve O-ring.

1. Install in the reverse order of removal.

CVVT oil control valve installation bolt:
9.8 - 11.8 N.m (1.0 - 1.2 kgf.m, 7.2 - 8.7 lb-ft)

Engine Control/Fuel System

Description

Fuel Pressure Control Valve is installed on the high pressure fuel pump and controls fuel flow flowing into the injectors in accordance with the ECM signal calculated based on various engine condition.

Engine Control/Fuel System

Specification

Item	Specification
Coil Resistance (Ω)	0.49 ± 5% [20°C(68°F)

Engine Control/Fuel System

Signal Waveform

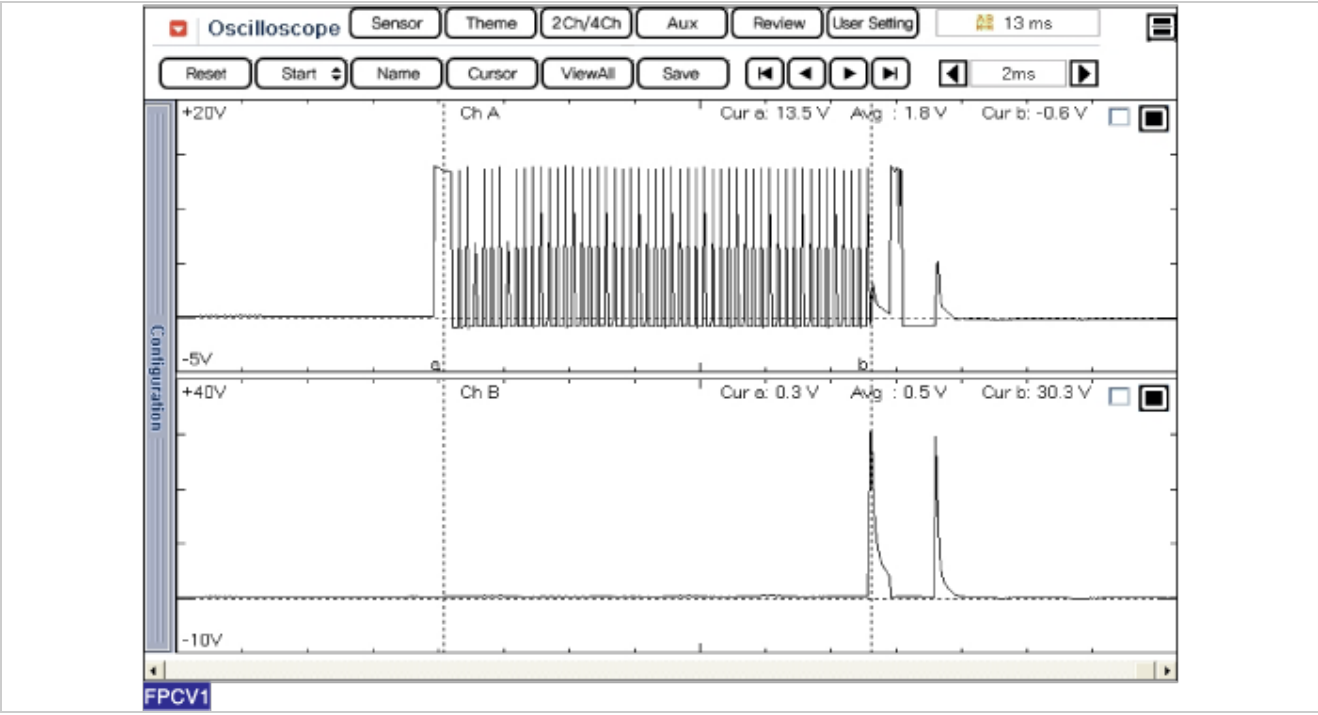

Engine Control/Fuel System

Circuit Diagram

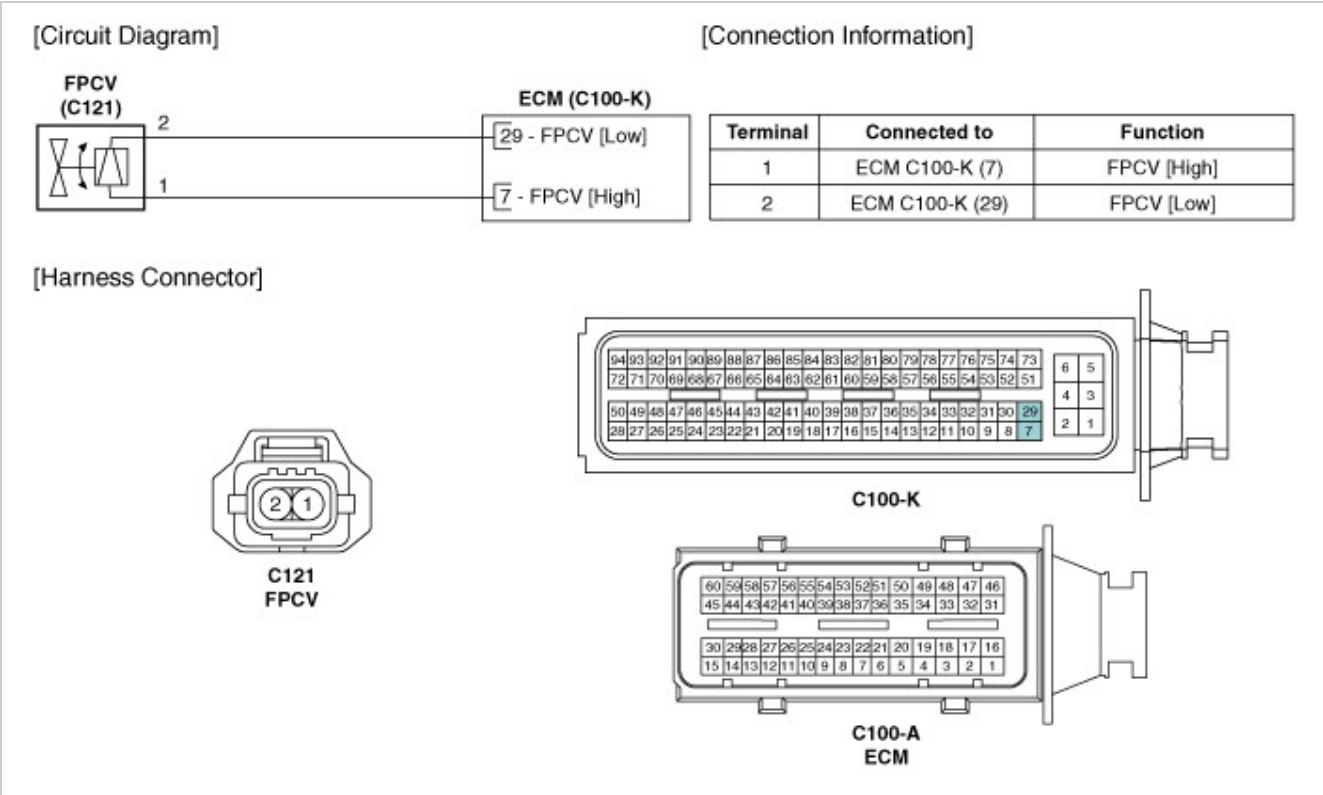

Terminal	Connected to	Function
1	ECM C100-K (7)	FPCV [High]
2	ECM C100-K (29)	FPCV [Low]

Engine Control/Fuel System

Inspection

1. Turn the ignition switch OFF and disconnect the battery negative (-) cable.
2. Disconnect the fuel pressure regulator valve connector.
3. Measure resistance between the fuel pressure regulator valve terminals 1 and 2.
4. Check that the resistance is within the specification.

Specification: Refer to “Specification”

Engine Control/Fuel System

Description

The Electric EGR Control Valve is installed in between the EGR cooler and the exhaust line and is a solenoid valve. This valve controls EGR (Exhaust Gas Recirculation) amount by the ECM"s duty control signal depending on engine load and the need of intake air.

The Exhaust Gas Recirculation (EGR) system is used to add the exhaust gas to intake air in order to reduce an excess of air and the temperature in the combustion chamber.

Engine Control/Fuel System

Specification

[Motor]

Item	Specification
Coil Resistance (Ω)	2.37 - 2.7

[Position sensor]

Item	Specification
Opened Voltage (V)	0.7 - 1.3
Closed Voltage (V)	3.9 - 4.5

Engine Control/Fuel System

Circuit Diagram

[Circuit Diagram]

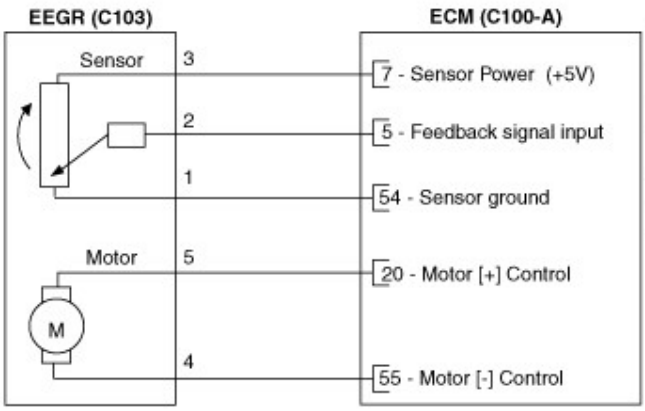

[Connection Information]

Terminal	Connected to	Function
1	ECM C100-A (54)	Sensor ground
2	ECM C100-A (55)	Feedback signal input
3	ECM C100-A (7)	Sensor Power (+5V)
4	ECM C100-A (5)	Motor [-] Control
5	ECM C100-A (20)	Motor [+] Control

[Harness Connector]

C103
EEGR

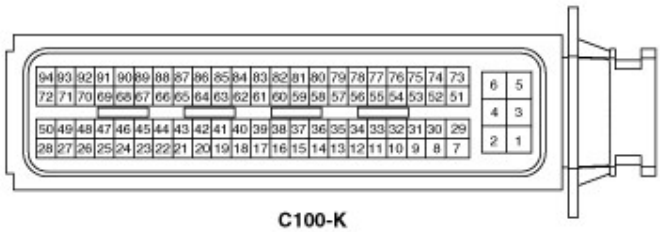

C100-K

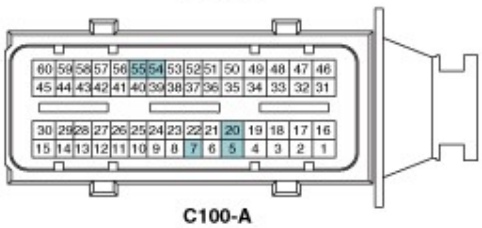

C100-A
ECM

Engine Control/Fuel System

Signal Waveform

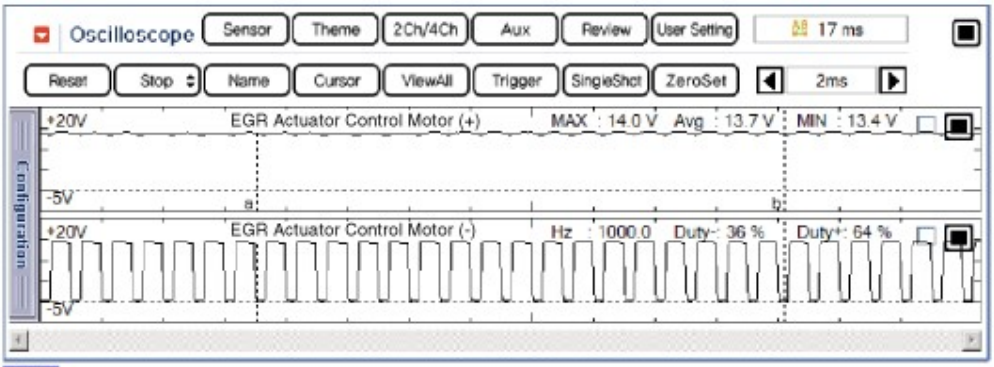

Fig.1

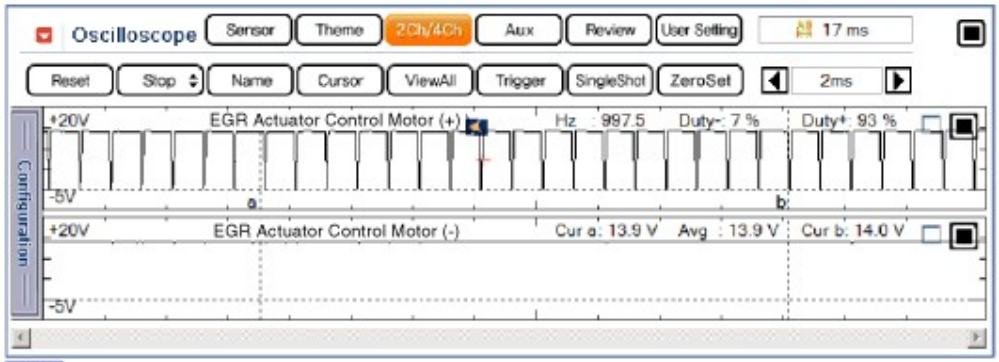

Fig.2

Fig.1) Duty control [EEGR Motor (-)] at deceleration or idle
Fig.2) Duty control [EEGR Motor (+)] at acceleration

Inspection

[Motor]

1. Turn the ignition switch OFF.
2. Disconnect the EEGR valve connector.
3. Check that the EEGR valve is stuck by foreign material.
4. Measure resistance between motor 1 and 3 control terminals of the motor.
5. Check that the resistance is within the specification.

▷ **Specification**

Item	Specification
Coil Resistance (Ω)	2.37 - 2.7

[Feedback Position Sensor]

1. Connect the GDS to the data link connector.
2. Perform the fully open and the fully closing operation of the EEGR valve by using the actuation test.
3. Check that the voltage is within the specification

▷ **Specification**

Item	Specification
Opened Voltage (V)	0.7 - 1.3
Closed Voltage (V)	3.9 - 4.5

Removal

1. Turn the ignition switch OFF and disconnect the battery negative (-) cable.
2. Remove the air cleaner assembly
   (Refer to Engine Mechanical System - "Air Cleaner")
3. Disconnect the EEGR control valve connector (A).

4. Remove the EGR cooler pipe.
   (Refer to Engine Mechanical System - "EGR Cooler")
5. Remove the EEGR control valve (B) after removing the mounting bolt and nut (A).

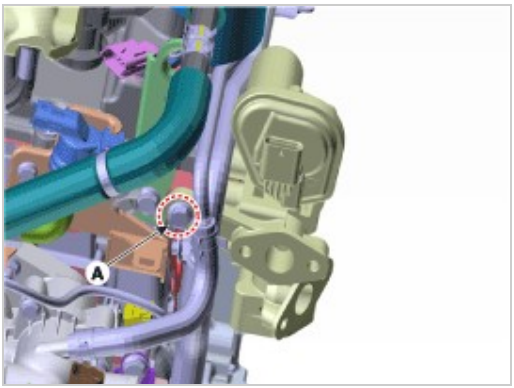

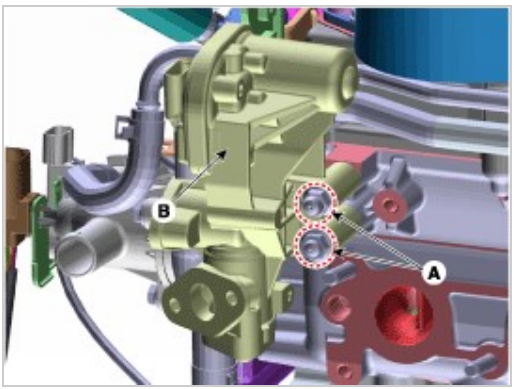

Installation

NOTICE

- After replacing the Electric EGR control valve, MUST perform the "Component Change Routine" procedure. Otherwise trouble related with engine performance or emission control may occur until ECM learning about the component is over.

1. Turn the ignition switch OFF.
2. Connect the GDS to Data Link Connector (DLC).
3. Turn ignition switch ON.
4. Select "Vehicle, Model year, Engine, System".
5. Select "Vehicle S/W Management".
6. Select "Component Change Routine".

7. Select " EGR Valve Change".
8. Perform the procedure in accordance with the message

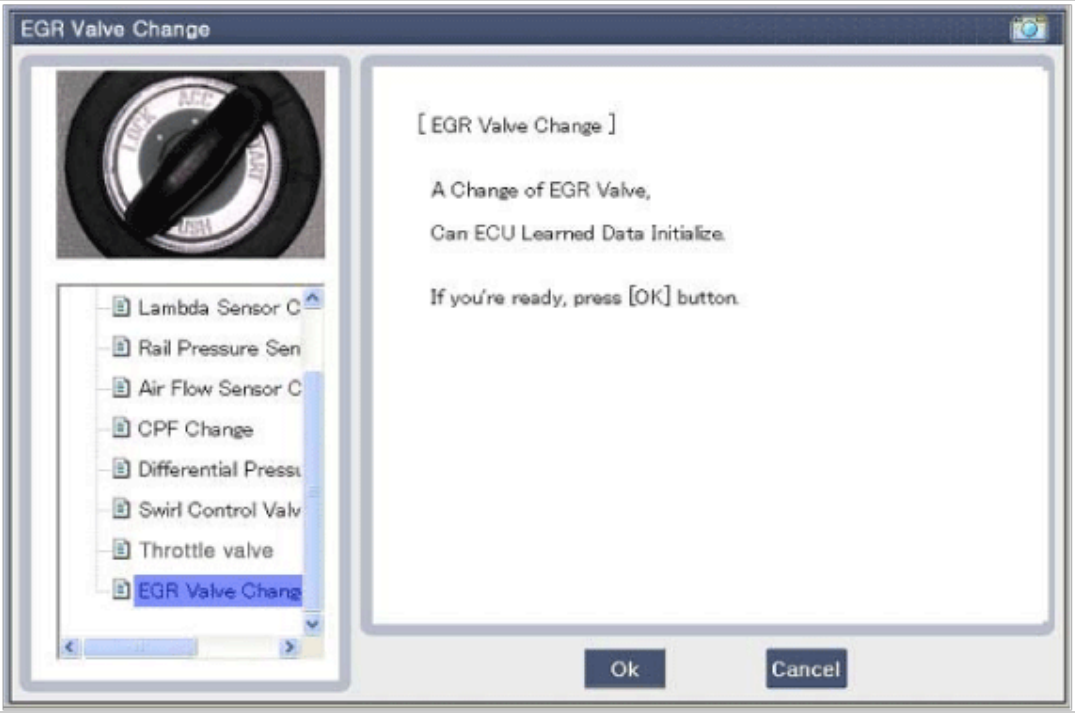

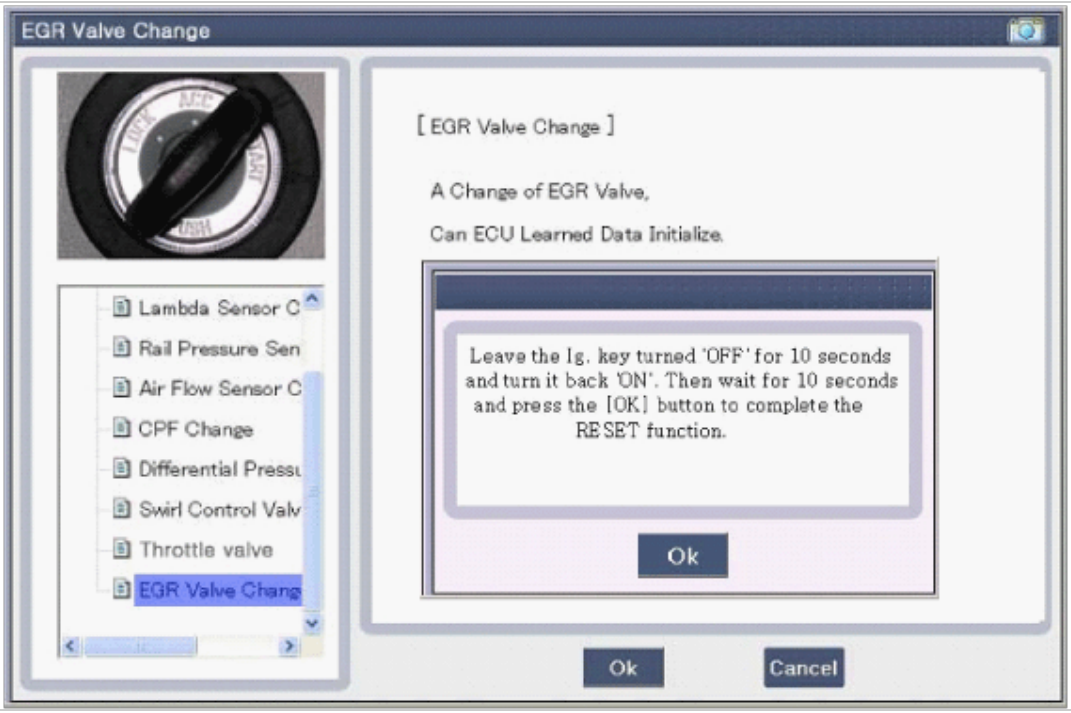

Engine Control/Fuel System

Description

Canister Close Valve (CCV) is normally open and is installed on the canister ventilation line. It seals evaporative emission control system by shutting the canister from the atmosphere during EVAP leak detection process.

Engine Control/Fuel System

Specification

Item	Specification
Coil Resistance (Ω)	19.5 ~ 22.5 [20°C(68°F)]

Circuit Diagram

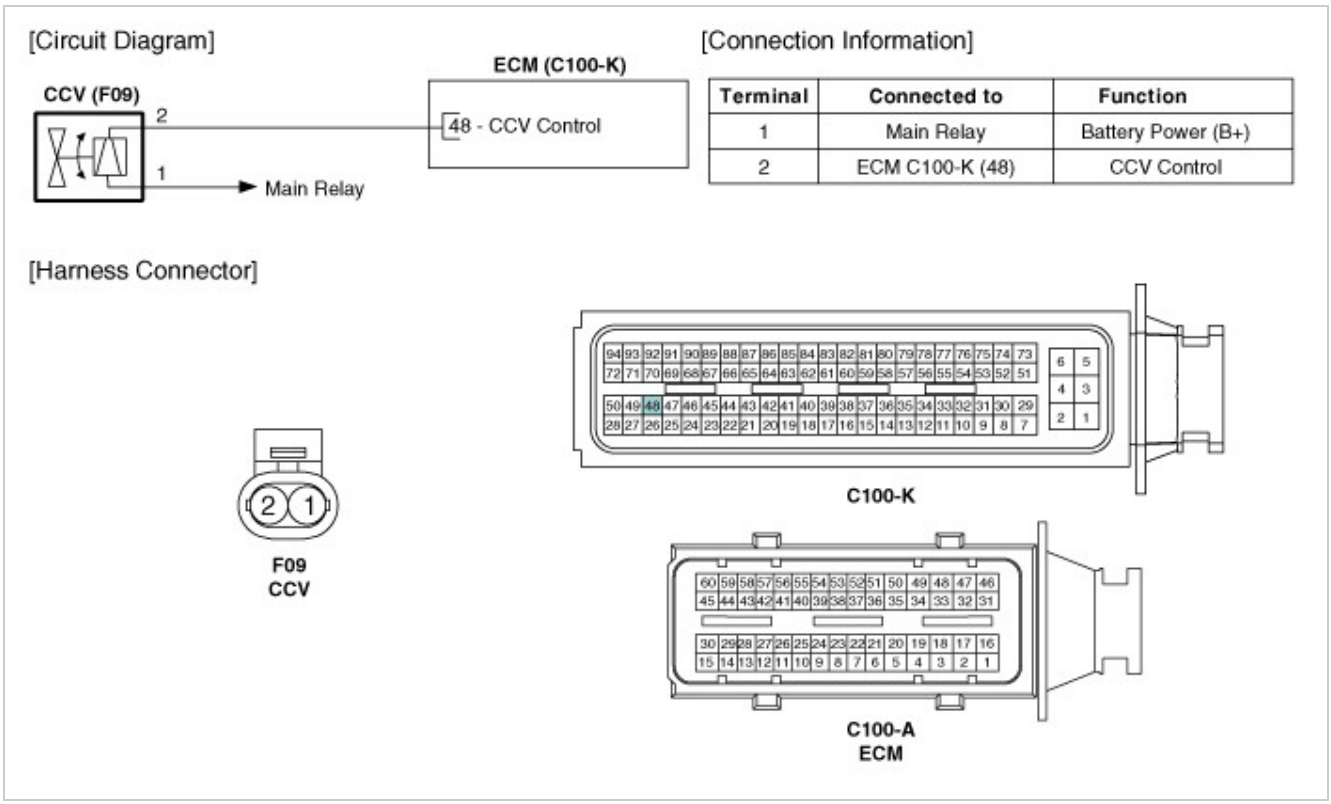

Engine Control/Fuel System

Inspection

1. Turn the ignition switch OFF.
2. Disconnect the CCV connector.
3. Measure resistance between the CCV terminal 1 and 2.
4. Check that the resistance is within the specification.
   Specification : Refer to "Specification"
5. Disconnect the vapor hose connected with the canister from the CCV.
6. Connect a vacuum pump to the nipple.
7. Ground the CCV control line and apply battery voltage to the CCV power supply line.
8. Apply vacuum and check the valve operation.
   Specification : Vacuum maintained

Removal

1. Turn ignition switch OFF and disconnect the battery negative (-) terminal.
2. Remove the canister assembly.
   (Refer to Emission Control System - "Canister")
3. Disconnect the vapor hose (A).

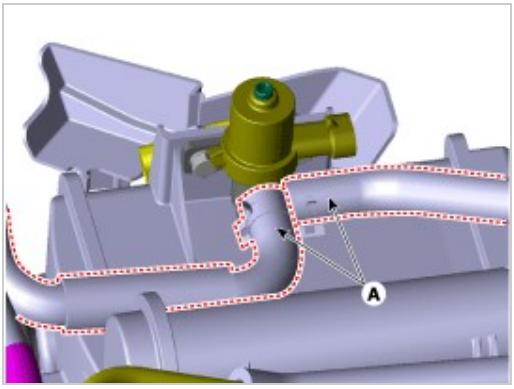

4. Remove the installation bolt (A), and then remove the canister close valve.

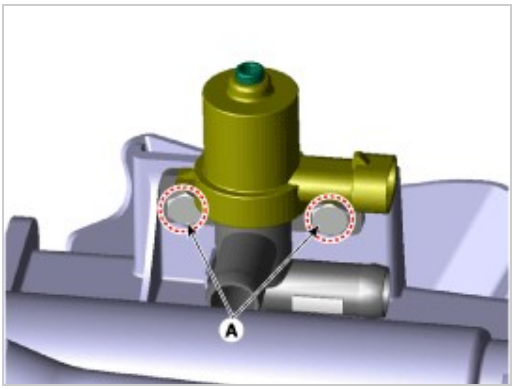

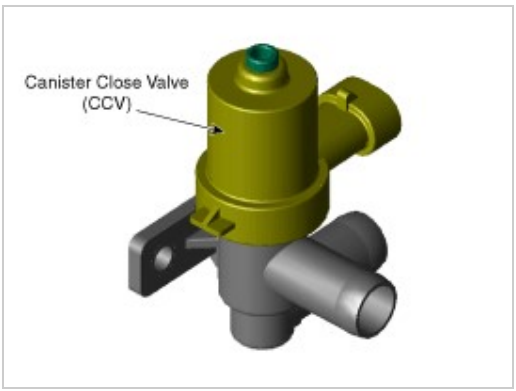

Installation

⚠ CAUTION

- Install the component with the specified torques.
- Note that internal damage may occur when the component is dropped. In this case, use it after inspecting.

1. Install in the reverse order of removal

Engine Control/Fuel System

Components Location

[Fuel Tank]

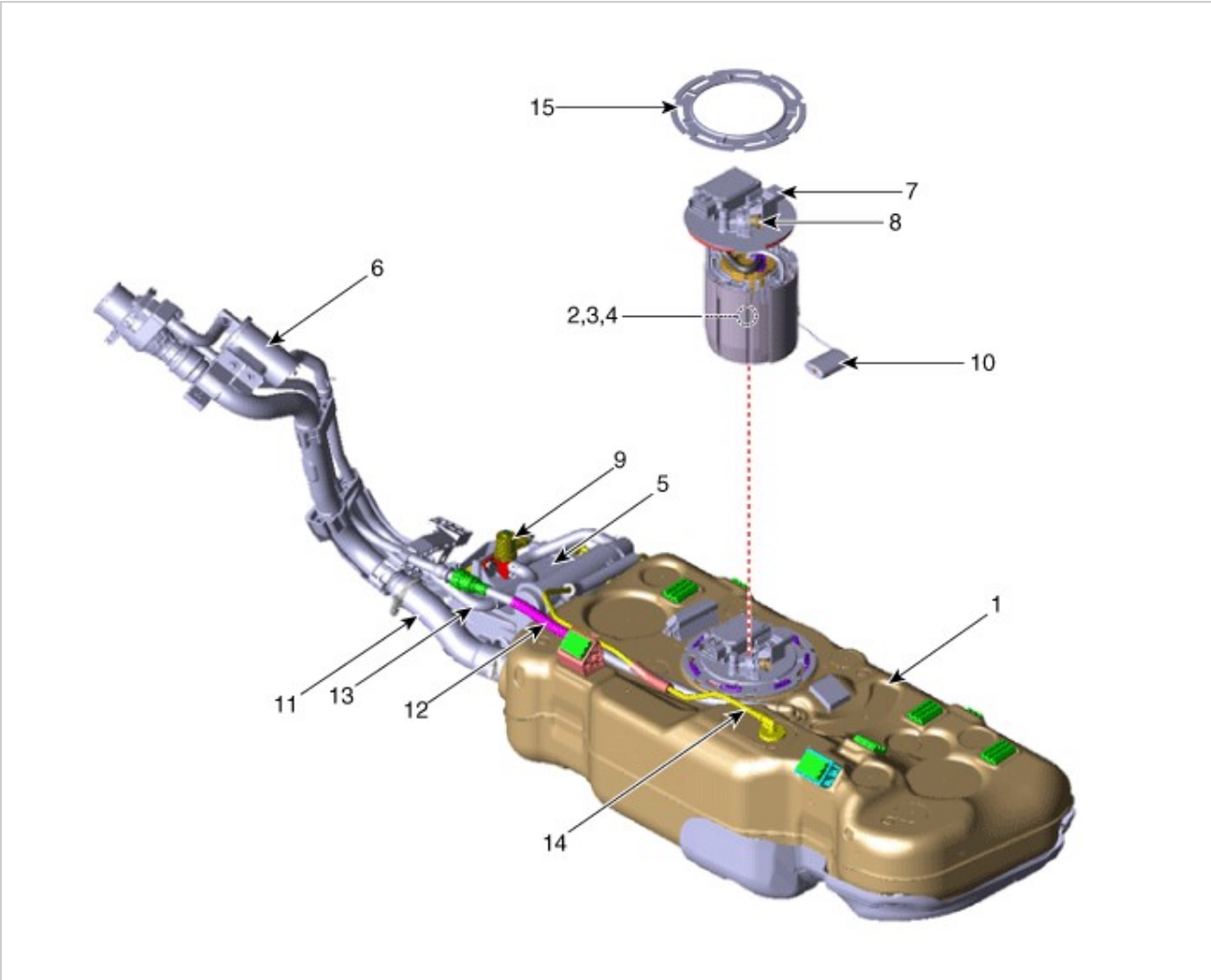

1. Fuel tank
2. Fuel pump
3. Fuel filter
4. Fuel pressure regulator
5. Canister
6. Fuel tank air Filter
7. Fuel tank pressure sensor
8. Fuel pressure sensor (FPS)
9. Canister close valve
10. Fuel level sensor (FLS)
11. Fuel Filler hose
12. Leveling hose
13. Vent hose
14. Vapor tube
15. Fuel pump plate cover

[High Pressure Fuel Line]

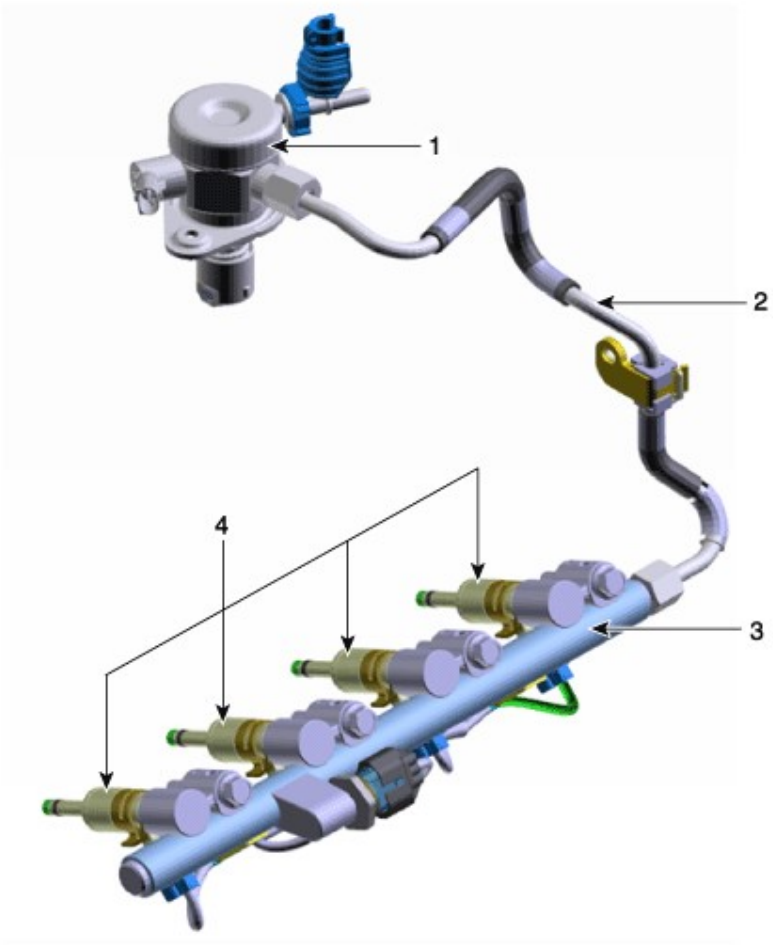

1. High pressure fuel pump
2. High pressure fuel pipe
3. Delivery pipe
4. Injector

WARNING

- In case of removing the high pressure fuel pump, high pressure fuel pipe, delivery pipe, and injector, there may be injury caused by leakage of the high pressure fuel. So don't do any repair work right after engine stops.

Fuel Pressure Test

1. Release the residual pressure in fuel line (Refer to "Release Residual Pressure in Fuel Line" in this group).

CAUTION

- When removing the fuel pump fuse, a Diagnostic Trouble Code (DTC) may occur. Delete the code with the GDS after completion of "Release Residual Pressure in Fuel Line" work.

2. Install the Special Service Tool (SST).
   (1) Disconnect the fuel feed tube from the high pressure fuel pump.

CAUTION

- There may be some residual pressure even after "Release Residual Pressure in Fuel Line" work, so cover the hose connection with a shop towel to prevent residual fuel from spilling out before disconnecting any fuel connection.

   (2) Install the special service tool for measuring the fuel pressure in between the fuel feed tube and the high pressure fuel pump (Refer to the figure below).

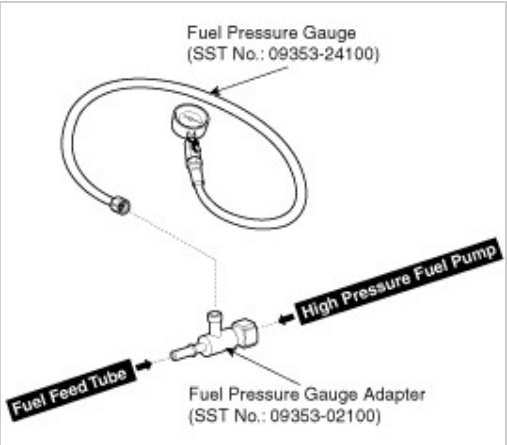

3. Inspect fuel leakage on connections among the fuel feed tube, the high pressure fuel pump, and the SST components with IG ON.
4. Measure Fuel Pressure.
   (1) Start the engine and measure the fuel pressure at idle.

   Fuel Pressure:
   495 - 505 kPa (4.9 - 5.1 kgf/cm², 71.8 - 73.2 psi)

   NOTICE
   - If the fuel pressure differs from the standard value, repair or replace the related part (Refer to the table below).

Fuel Pressure	Cause	Related Part
Too Low	Fuel filter clogged	Fuel Filter
	Fuel leakage	Fuel Pressure Regulator
Too High	Fuel pressure regulator stuck	Fuel Pressure Regulator

   (2) Stop the engine, and then check for the change in the fuel pressure gauge reading.

   Standard Value: The gauge reading should hold for about 5 minutes after the engine stops

   NOTICE
   - If the gauge reading should not be held, repair or replace the related part (Refer to the table below).

Fuel Pressure (After Engine Stops)	Cause	Related Part
Fuel Pressure Drops Slowly	Leakage on injector	Injector
Fuel Pressure Drops Immediately	Check valve of fuel pump stuck open	Fuel Pump

   (3) Turn the ignition switch OFF.
5. Release the residual pressure in fuel line (Refer to “Release Residual Pressure in Fuel Line”).

   ⚠ CAUTION
   - When removing the fuel pump relay, a Diagnostic Trouble Code (DTC) may occur. Delete the code with the GDS after completion of “Release Residual Pressure in Fuel Line” work.
6. Test End
   (1) Remove the Special Service Tool (SST) from the fuel feed tube and the high pressure fuel pump.
   (2) Connect the fuel feed tube and the high pressure fuel pump.

Release Residual Pressure in Fuel Line

⚠ CAUTION
- Whenever the high pressure fuel pump, fuel pipe, delivery pipe, or injector is removed immediately after shutting off the engine, an injury may be caused by the release of highly pressurized fuel. Release the residual pressure in the high pressure fuel line by referring to the "Residual fuel pressure release procedure" below before removing any high pressure fuel system components.

NOTICE
- Wear safety glasses and fuel resistant gloves.

1. Turn the ignition off and disconnect the battery negative cable.
2. Remove the fuel pump fuse (A).

3. Disconnect the electrical connector from the high pressure fuel pump.
4. Reconnect the battery negative cable.
5. Run the engine for about 20 seconds to lower the pressure in both the high or low pressurelines. The engine may shut off within the 20 second period. If not, turn the engine off.
6. Proceed with the service or repair. Use rags to cover opening and catch spills when opening up the high pressure system.
7. Reinstall / re-connect all components in reverse order of removal. Start engine and confirm proper operation, and make sure there are no fuel leaks.
8. After completing, clear DTC(s) using GDS scan tool (the procedure described above will cause DTC to set).

Removal

1. Turn the ignition switch OFF and disconnect the battery negative (-) cable.
2. Remove the rear seat cushion.
   (Refer to Body - "Rear Seat Assembly")
3. Remove the fuel pump service cover (A).

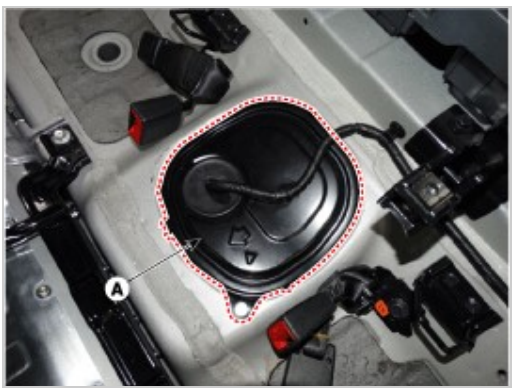

NOTICE

- When reinstalling a protective cover for a fuel pump, remove the existing butyl tape and apply a new one.
- Before assembling the protective cover, ensure that the temperature of the butyl is about 30°C using a hair dryer or a heat gun.

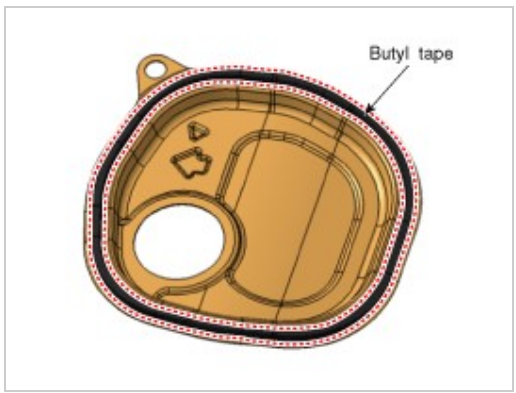

NOTICE

- When installing the protective cover for the fuel pump, pay attention to the installation direction of the grommet and the protective cover.

– The arrow (A) should be in the forward direction of the car.
– Align the bulging part of the vehicle body (B) with the hole of the protective cover.
– Align the bulging part of the grommet (C) with the bulging part of the protective cover.

4. Disconnect the fuel pump control module connector (A).
5. Disconnect the fuel pressure sensor connector (B).
6. Disconnect the fuel tank pressure sensor connector (C).
7. Disconnect the fuel feed tube quick-connector (D)

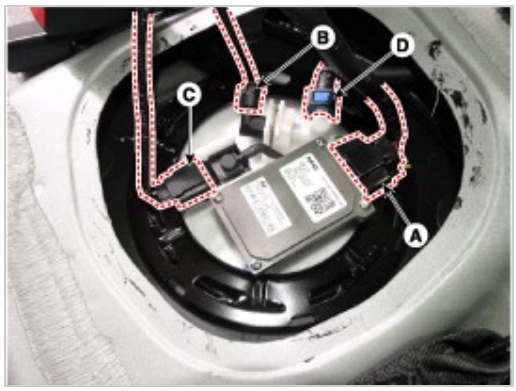

8. Lift the vehicle.
9. Disconnect the vapor tube quick-connector (A).

10. Disconnect the fuel filler hose hose (A) and vent hose (B).
11. Disconnect the leveling quick-connector (C).

12. Support the fuel tank with a jack.
13. Remove the fuel tank band mounting nut (B)
14. Remove the fuel tank (C) from the vehicle.

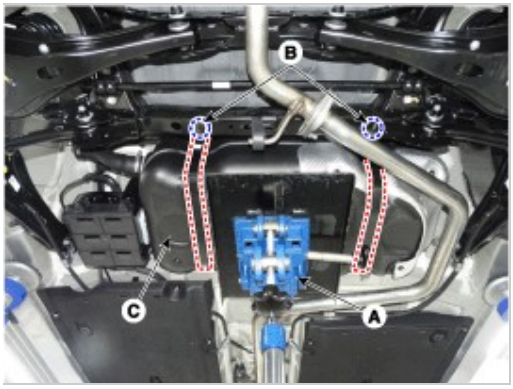

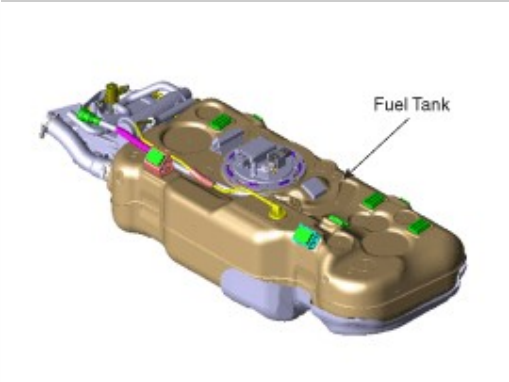

Installation

1. Install in the reverse order of removal.

Fuel tank band installation nut:
39.2 - 54.0 N.m (4.0 - 5.5 kgf.m, 28.9 - 39.8 lb-ft)

Engine Control/Fuel System

Inspection

[Fuel sender]

1. Using an ohmmeter, measure the resistance between terminals 1 and 6 of sender connector (A) at each float level.

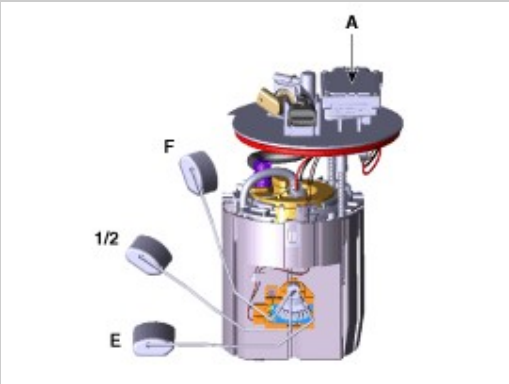

Pin No.	Discription
1	Fuel sender ground
2	Fuel pressure sensor (FPS) signal input
3	Fuel pressure sensor (FPS) ground (-)
4	Ground
5	CAN [Low]
6	Fuel sender signal
7	-
8	Fuel pressure sensor (FPS) Power supply (+5V)
9	CAN [High]
10	Battery power (B+)

2. Also check that the resistance changes smoothly when the float is moved from "E" to "F".

Position	Resistance (Ω)	Capacity (ℓ)
E	298 - 305	2.3
1/2	80 - 82	22.5
F	14 - 16	44.1

Removal

1. Turn the ignition switch OFF and disconnect the battery negative (-) cable.
2. Remove the rear seat cushion.
   (Refer to Body - "Rear Seat Assembly")
3. Remove the rear seat back assembly
   (Refer to Body - "Rear Seat Assembly")
4. Remove the fuel pump service cover (A).

NOTICE

- When reinstalling a protective cover for a fuel pump, remove the existing butyl tape and apply a new one.
- Before assembling the protective cover, ensure that the temperature of the butyl is about 30°C using a hair dryer or a heat gun.

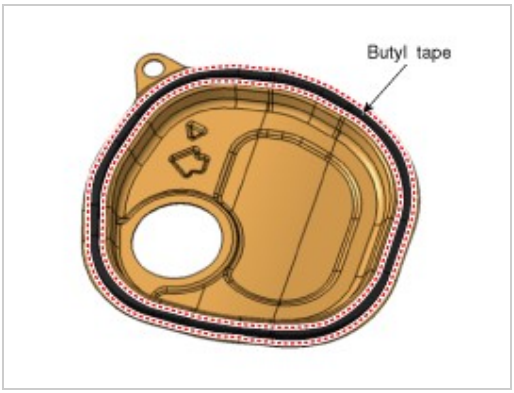

NOTICE

- When installing the protective cover for the fuel pump, pay attention to the installation direction of the grommet and the protective cover.
  – The arrow (A) should be in the forward direction of the car.
  – Align the bulging part of the vehicle body (B) with the hole of the protective cover.
  – Align the bulging part of the grommet (C) with the bulging part of the protective cover.

5. Disconnect the fuel pump control module connector (A).
6. Disconnect the fuel pressure sensor connector (B).
7. Disconnect the fuel tank pressure sensor connector (C).
8. Disconnect the fuel feed tube quick-connector (D)

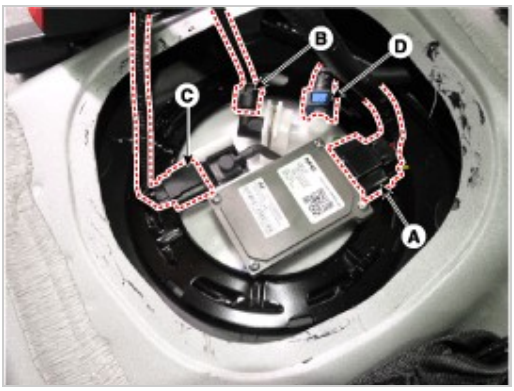

9. Remove the fuel pump locking ring (B) with SST (A) [SST.: 09310-F3100].

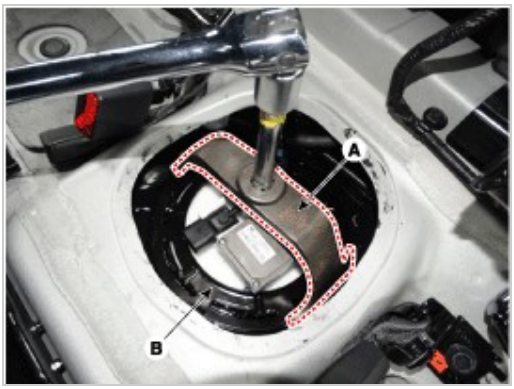

10. Remove the fuel pump (A).

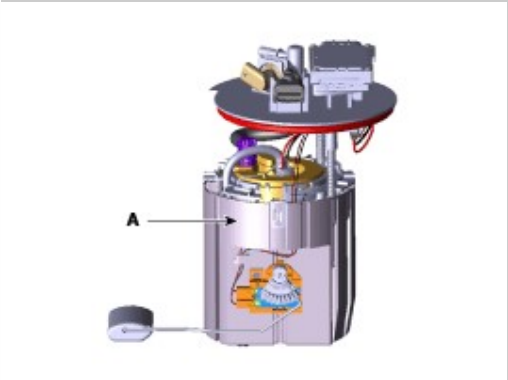

Installation

1. Install in the reverse order of removal.

Engine Control/Fuel System

Removal

1. Remove the fuel pump.
   (Refer to Fuel System - "Fuel Pump")
2. Disconnect the fuel pump motor connector (A) and fuel sender connector (B).

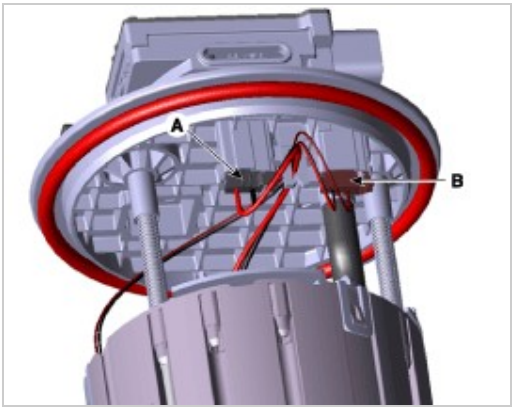

3. Press the fixing hook (A) with a driver and then remove fuel sender (B) in the arrow direction.

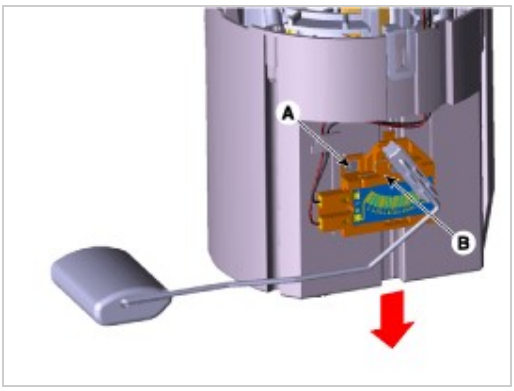

4. Disconnect the fuel feed tube (B) after removing the fixing pin (A).

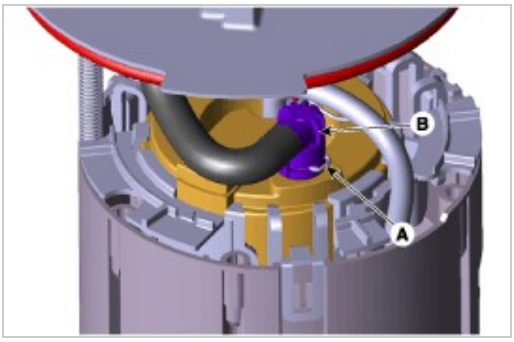

5. Remove the head assembly (B) after releasing the fixing hooks (A).

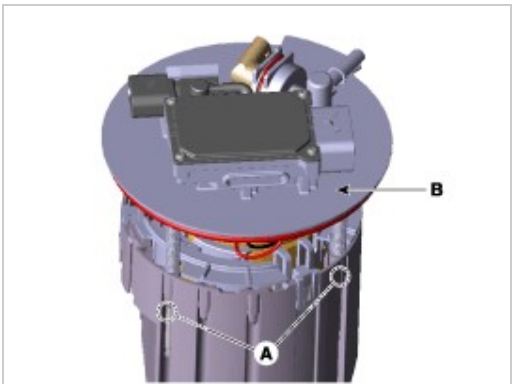

6. Remove the reservoir-cup (B) after releasing the fixing hooks (A).

7. Disconnect the ground line (A).
8. Disconnect the fuel pump motor connector (A).

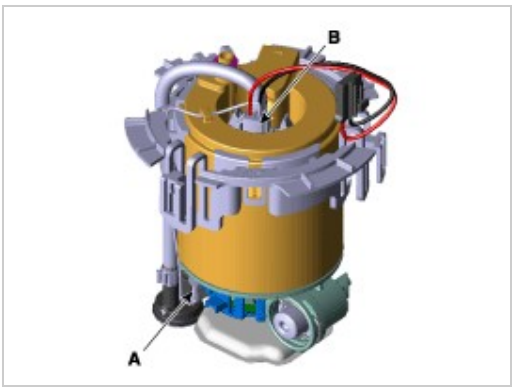

9. Disconnect the fuel pressure regulator (B) after removing the fixing pin (A).

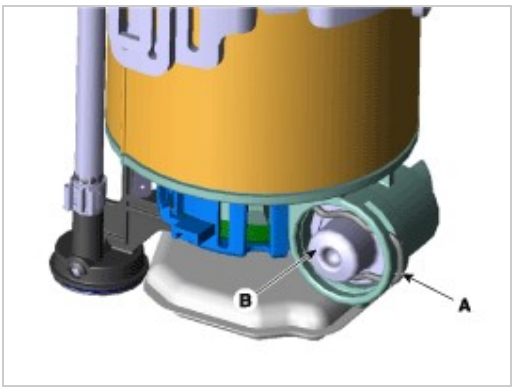

10. Remove the free filter p (B) after releasing the fixing hooks (A).

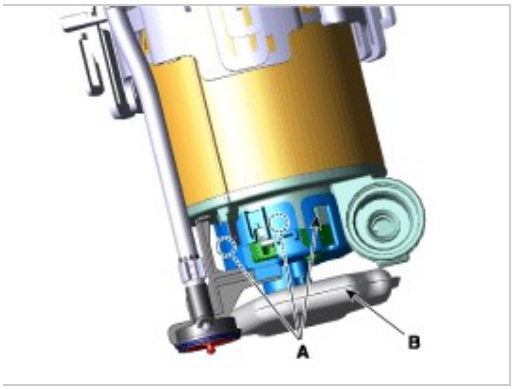

11. Remove the fuel pump motor (A) from the fuel filter.

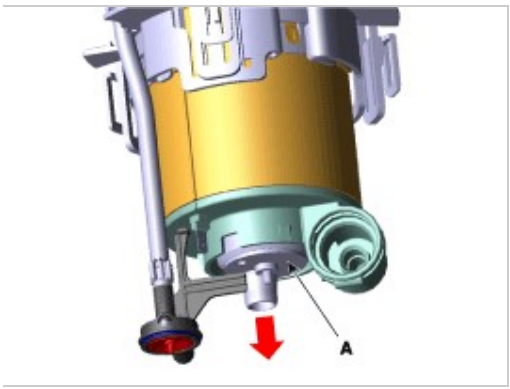

12. Remove the fuel filter from the bracket after releasing the fixing hooks (A).

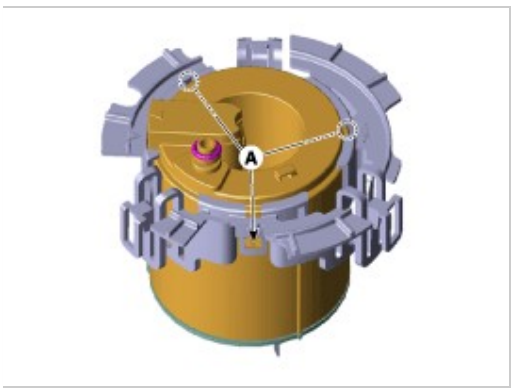

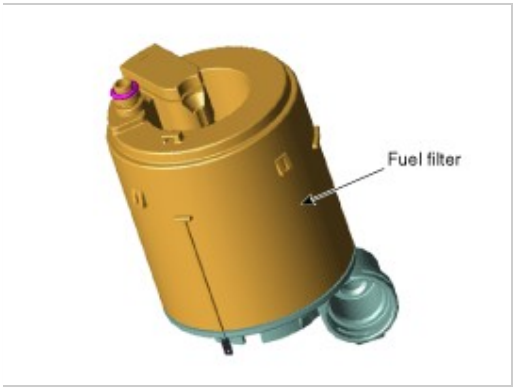

Installtion

1. Install in the reverse order of removal.

Removal

1. Remove the fuel pump.
   (Refer to Fuel System - "Fuel Pump")
2. Disconnect the fuel pump motor connector (A) and fuel sender connector (B).

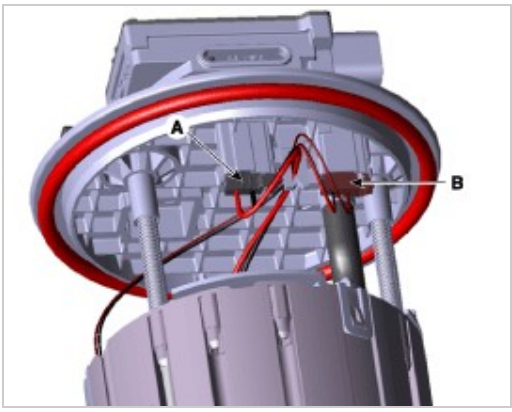

3. Press the fixing hook (A) with a driver and then remove fuel sender (B) in the arrow direction.

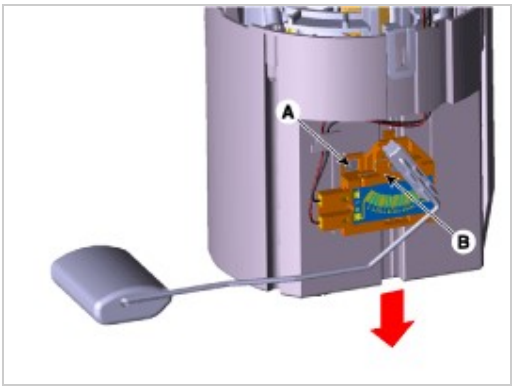

4. Disconnect the fuel feed tube (B) after removing the fixing pin (A).

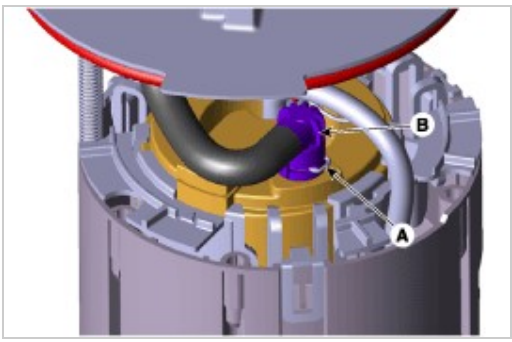

5. Remove the head assembly (B) after releasing the fixing hooks (A).

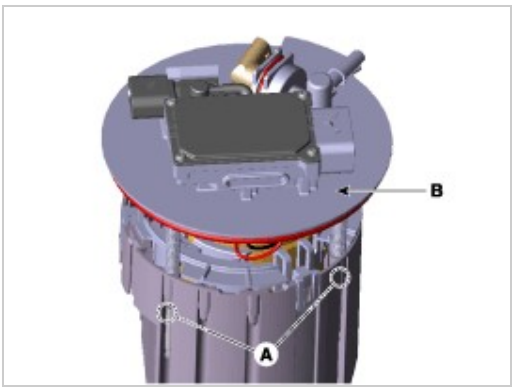

6. Remove the reservoir-cup (B) after releasing the fixing hooks (A).

7. Disconnect the ground line (A).
8. Disconnect the fuel pump motor connector (A).

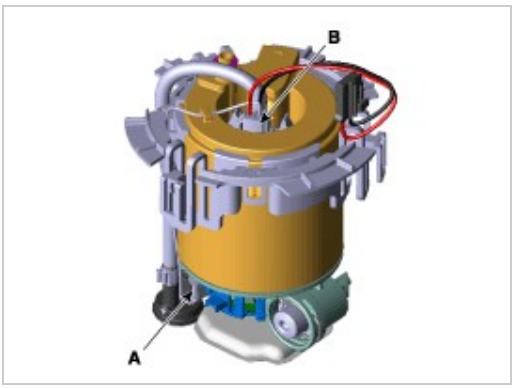

9. Disconnect the fuel pressure regulator (B) after removing the fixing pin (A).

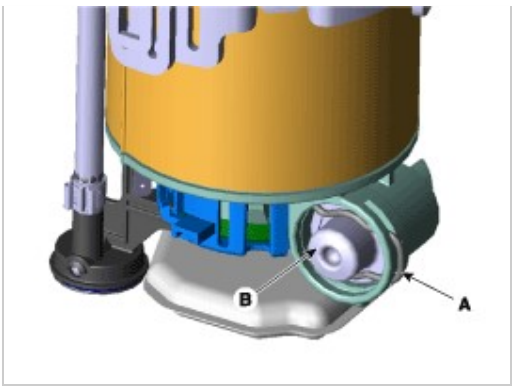

10. Remove the free filter p (B) after releasing the fixing hooks (A).

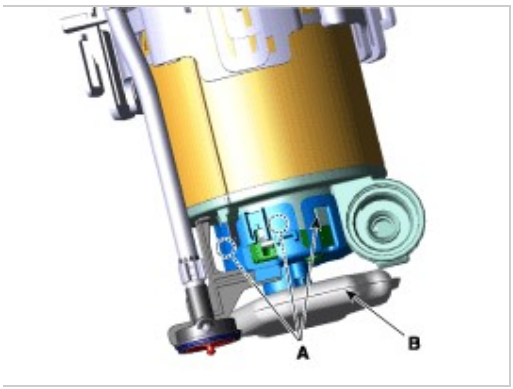

11. Remove the fuel pump motor (A) from the fuel filter.

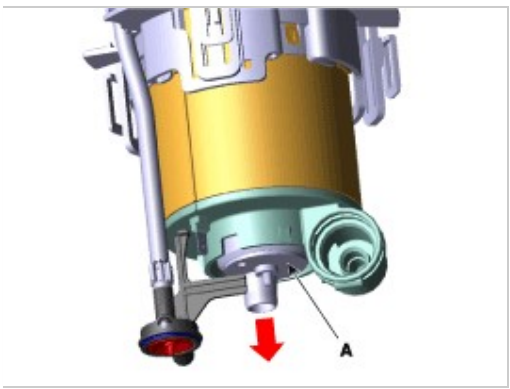

Installtion

1. Install in the reverse order of removal.

Engine Control/Fuel System

Removal

1. Remove the fuel pump.
   (Refer to Fuel System - "Fuel Pump")
2. Disconnect the fuel pump motor connector (A) and fuel sender connector (B).

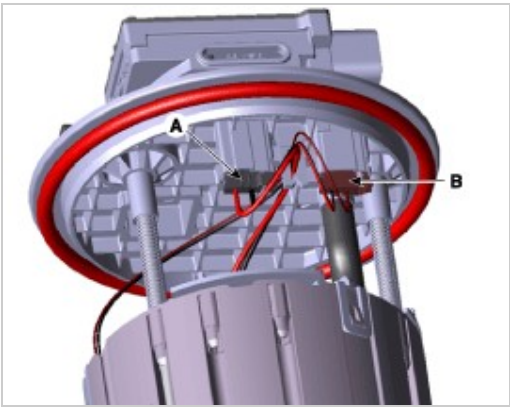

3. Press the fixing hook (A) with a driver and then remove fuel sender (B) in the arrow direction.

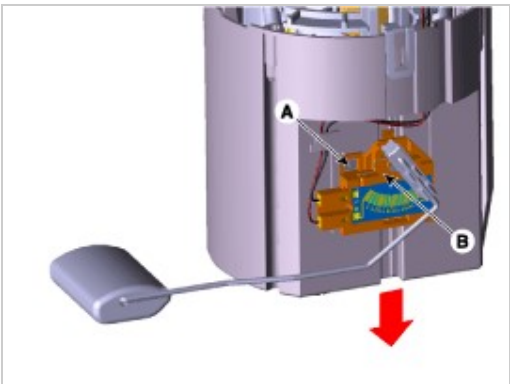

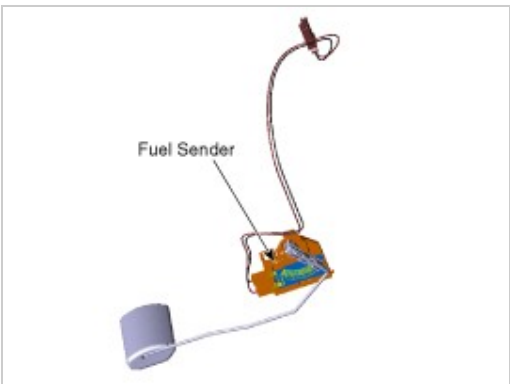

Installation

1. Install in the reverse order of removal.

Engine Control/Fuel System

Removal

1. Remove the fuel pump.
   (Refer to Fuel System - "Fuel Pump")
2. Disconnect the fuel pump motor connector (A) and fuel sender connector (B).

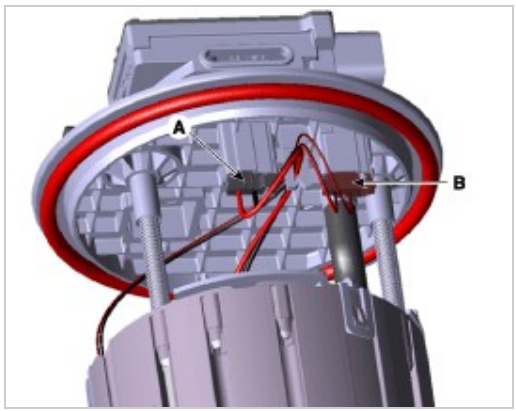

3. Press the fixing hook (A) with a driver and then remove fuel sender (B) in the arrow direction.

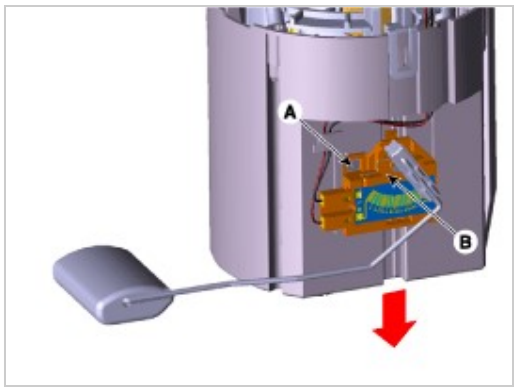

4. Disconnect the fuel feed tube (B) after removing the fixing pin (A).

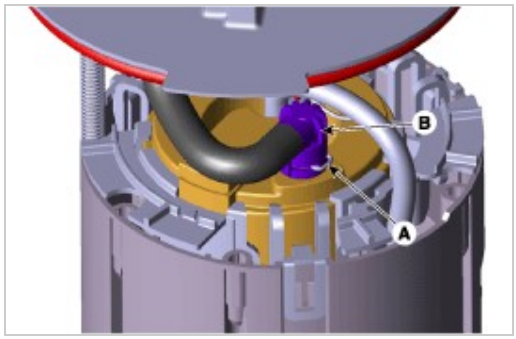

5. Remove the head assembly (B) after releasing the fixing hooks (A).

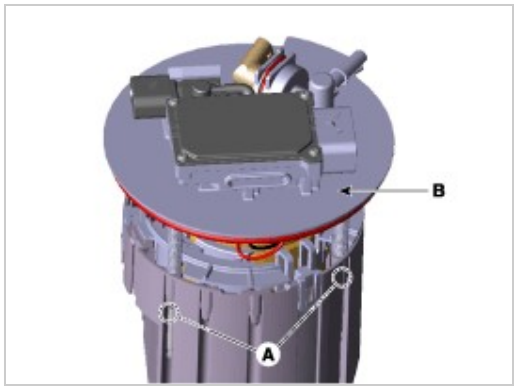

6. Remove the reservoir-cup (B) after releasing the fixing hooks (A).

7. Disconnect the ground line (A).
8. Disconnect the fuel pump motor connector (A).

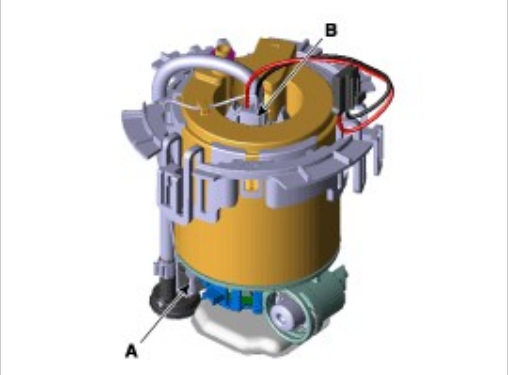

9. Disconnect the fuel pressure regulator (B) after removing the fixing pin (A).

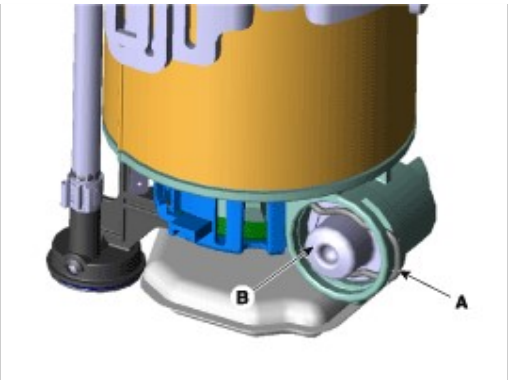

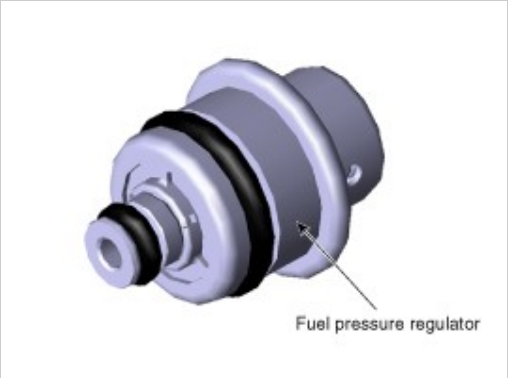

Installation

1. Install in the reverse order of removal.

Engine Control/Fuel System

Removal

1. Release the residual pressure in fuel line.
   (Refer to the Fuel Delivery System - "Release Residual Pressure in Fuel Line")
2. Turn the ignition switch OFF, and then remove battery (-) cable.
3. Disconnect the fuel feed tube quick-connector (A).

NOTICE

- Open the clamp cover (B) before disconnect the quick connector. (If the clip is applied)

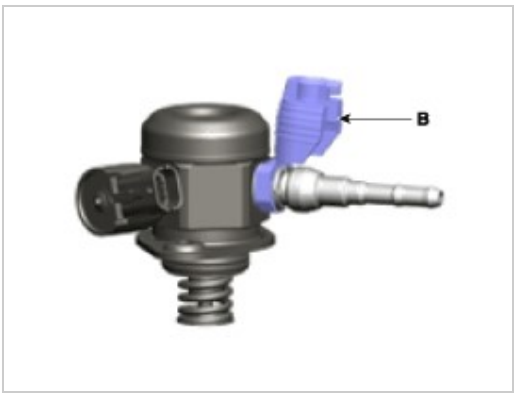

CAUTION

- When removing the quick-connnector with the clip removing tool (A), be careful not to damage the plastic clip (B).
- If the clip is damaged, fuel line leak can be occurred due to a bad connection.

4. Disconnect the vapor hose (A) which is connected from the PCSV.

5. Remove the fuel tank.
   (Refer to Fuel System - "Fuel Tank")
6. Remove the front sub frame.
   (Refer to Suspension System - "Sub Frame")
7. Remove the fuel and brake line protector (A) after removing the fixing clip.

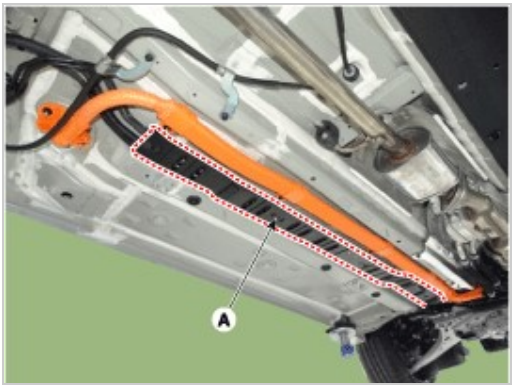

8. Remove the fuel feed line fixing clip (A).

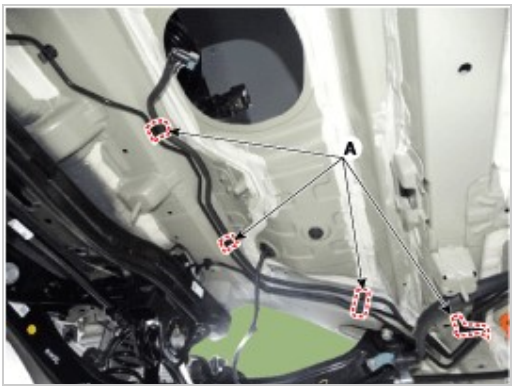

9. Remove the fuel line from the bottom of the vehicle.

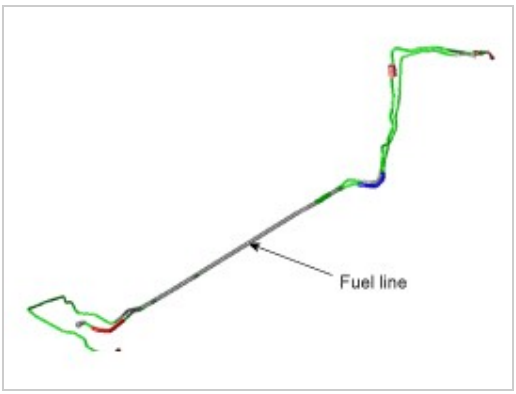

Installation

CAUTION

- Install the component with the specified torques.
- Note that internal damage may occur when the component is dropped. In this case, use it after inspecting.

1. Install in the reverse order of removal.

Engine Control/Fuel System

Removal

1. Turn the ignition seitch OFF and disconnect the battery negative (-) cable.
2. Open the fuel filler door and then remove the filler-neck installation screw (A).

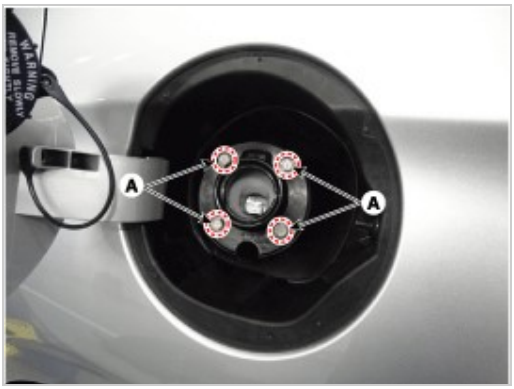

3. Lift the vehicle.

4. Remove the rear-LH wheel, tire, and the inner wheel house.
5. Disconnect the fuel filler hose (A) and the leveling hose (B).
6. Disconnect the vent tube quick-connector (C).

7. Remove the filler-neck assembly from the vehicle after removing the bracket installation bolt (A).

Installation

1. Install in the reverse order of removal.

Filler-neck assembly installation bolt:
7.8 - 11.8 N.m (0.8 - 1.2 kgf.m, 5.8 - 8.7 lb-ft)

Engine Control/Fuel System

Removal

1. Turn the ignition seitch OFF and disconnect the battery negative (-) cable.
2. Disconnect the accelerator position snesor connector (A).

3. Remove the installation nut (A), and then remove the accelerator pedal module.

Installation

1. Install in the reverse order of removal.

Accelerator pedal module installation nut:
12.7 - 15.7 N.m (1.3 - 1.6 kgf.m, 9.4 - 11.6 lb-ft)

Engine Control/Fuel System

Description

The fuel pump control module (FPCM) is installed on the right side of the fuel tank and controls the DC motor mounted inside the low pressure fuel pump.
The module compares instantaneous fuel pressure information measured by the fuel pressure sensor (FPS) with target fuel pressure information provided by the ECM and generates the desired target fuel pressure by controlling the fuel pump motor and regulating fuel flow rate in the low pressure fuel line between the low and high pressure fuel pumps.

Operation

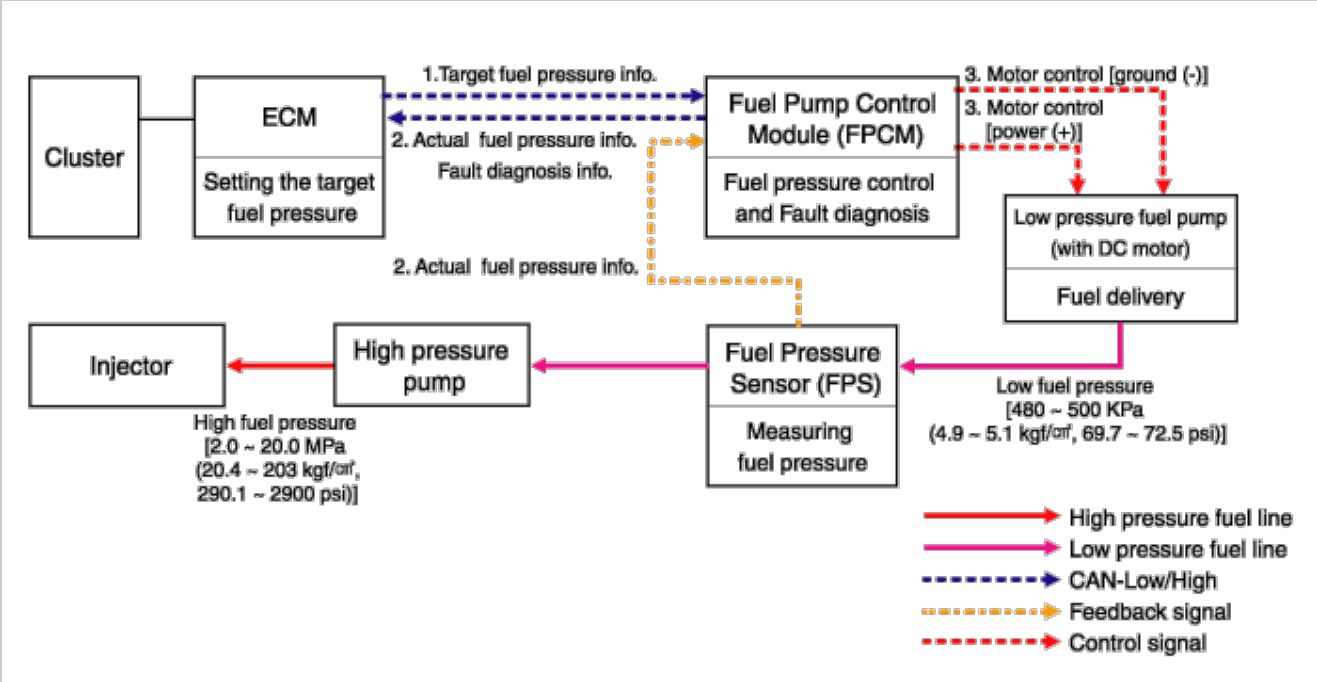

1. The ECM provides target fuel pressure information to the FPCM via CAN network.
2. The FPS provides the FPCM with actual pressure information of the low pressure fuel line between the low and high pressure fuel pumps, and the FPCM forwards the information to the ECM.Also, the FPCM diagnoses faults in the FPCM, fuel pump motor and FPS and then provides the diagnosis information to the ECM.
3. The FPCM compares the actual fuel pressure information measured by the FPS with the target fuel pressure information provided by the ECM and controls the voltage that is provided to the low pressure fuel pump motor.The FPCM keeps regulating fuel flow rate by controlling the low pressure fuel pump, depending on engine speed (rpm) and vehicle loads.

Engine Control/Fuel System

Circuit Diagram

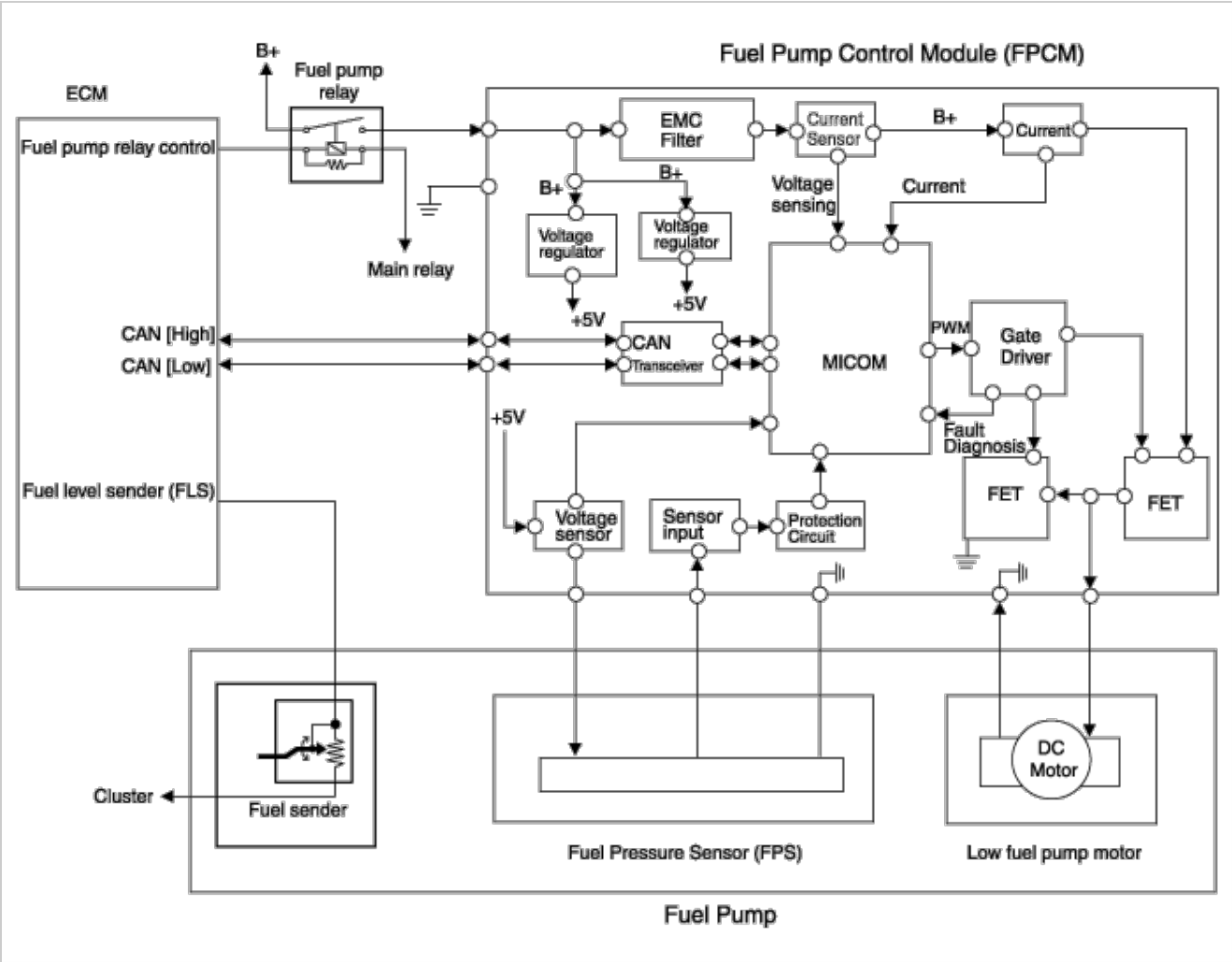

Fuel Pressure Control Module (FPCM) Terminal And Input/Output signal

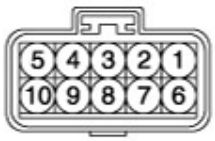

F25
FPCM

FPCM Terminal Function

Pin No.	Discription	Connected to
1	Fuel sender ground	Fuel Pump
2	Fuel pressure sensor (FPS) signal input	Fuel Pressure Sensor (FPS)
3	Fuel pressure sensor (FPS) ground (-)	Fuel Pressure Sensor (FPS)
4	Ground	Chassis Ground
5	CAN [Low]	ECM
6	Fuel sender signal	Fuel Pump
7	-	-
8	Fuel pressure sensor (FPS) Power supply (+5V)	Fuel Pressure Sensor (FPS)
9	CAN [High]	ECM
10	Battery power (B+)	Fuel Pump Relay

Removal

1. Turn the ignition switch OFF and disconnect the battery negative (-) cable.
2. Remove the rear seat cushion.
   (Refer to Body - "Rear Seat Assembly")
3. Remove the rear seat back assembly

(Refer to Body - "Rear Seat Assembly")

4. Remove the fuel pump service cover (A).

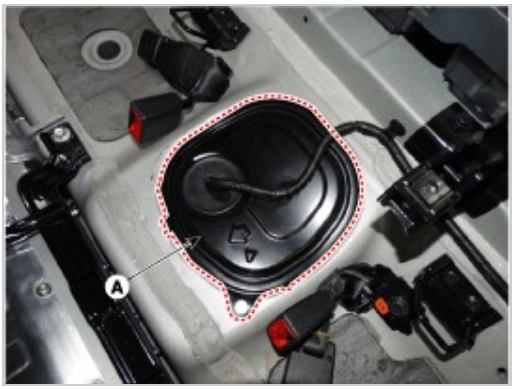

NOTICE

- When reinstalling a protective cover for a fuel pump, remove the existing butyl tape and apply a new one.
- Before assembling the protective cover, ensure that the temperature of the butyl is about 30°C using a hair dryer or a heat gun.

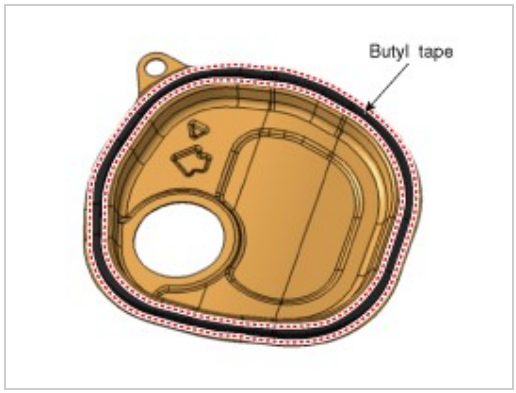

NOTICE

- When installing the protective cover for the fuel pump, pay attention to the installation direction of the grommet and the protective cover.

– The arrow (A) should be in the forward direction of the car.
– Align the bulging part of the vehicle body (B) with the hole of the protective cover.
– Align the bulging part of the grommet (C) with the bulging part of the protective cover.

5. Disconnect the fuel pump control module connector (A).
6. Disconnect the fuel pressure sensor connector (B).
7. Disconnect the fuel tank pressure sensor connector (C).
8. Disconnect the fuel feed tube quick-connector (D)

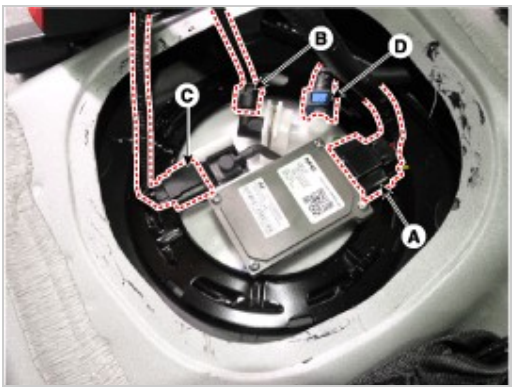

9. Remove the fuel pump locking ring (B) with SST (A) [SST.: 09310-F3100].

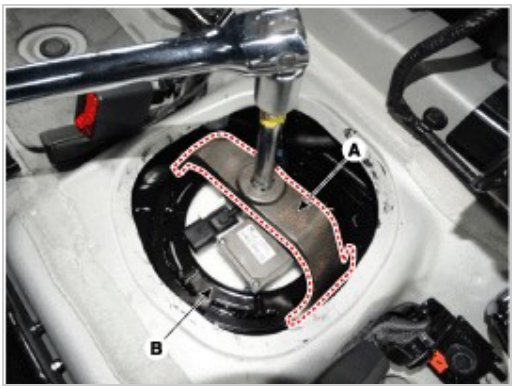

10. Remove the fuel pump control module (FPCM).

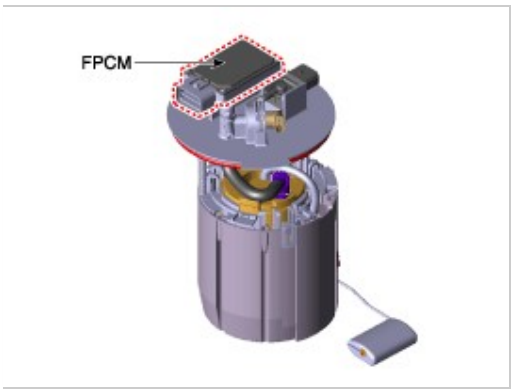

Installation

1. Install in the reverse order of removal.

Inspection

1. Connect the GDS to the vehicle"s data link connector (DLC).
2. Check any DTCs and if exist, repair according to the DTC guide.
3. Check the power supply voltage provided to the fuel pressure sensor (FPS).

Specification:5V

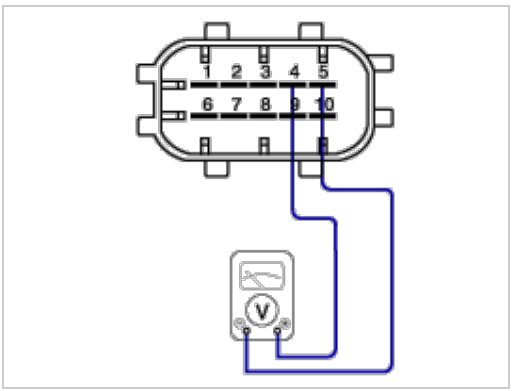

4. Check the voltage provided to the fuel pressure sensor (FPS) at idle.

Specification:1.9 - 3.2 V

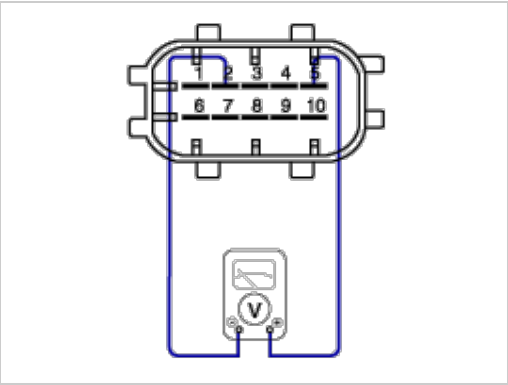

5. Check the fuel pressure in the low fuel line.
   (Refer to Fuel Delivery System - "Fuel Pressure Test")

Items	Specification
start	Max. 600 KPa (Max. 6.1 kgf/cm², Max. 87.0 psi)
in operation	350 - 500 KPa (3.5 - 5.1 kgf/cm², 50.7 - 72.5 psi)

Engine Control/Fuel System

Description

The fuel pressure sensor (FPS) is installed on the top of the low pressure fuel pump and measures the pressure in the low pressure fuel line.
Based on the fuel pressure measured by the FPS and the amount of fuel consumed, the fuel pump control module (FPCM) determines whether to activate the low pressure fuel pump.After activating the low pressure fuel pump, the FPS continues to provide the fuel pressure information to the FPCM and the FPCM keeps controlling the fuel flow rate using the feedback information from the FPS.

Engine Control/Fuel System

Specification

Pressure [KPa (kgf/cm², psi)]	Output Voltage (V)
50 (0.51, 7.3)	0.3
600 (6.12, 87.0)	2.5
1100 (11.2, 159.5)	4.5

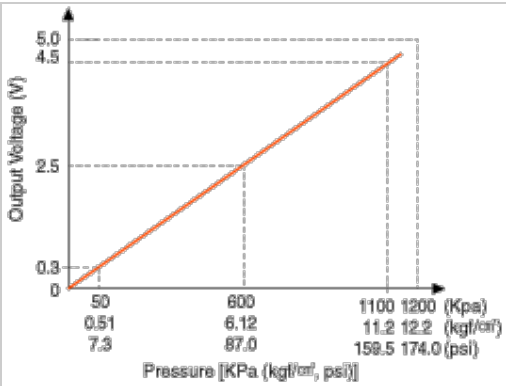

Engine Control/Fuel System

Circuit Diagram

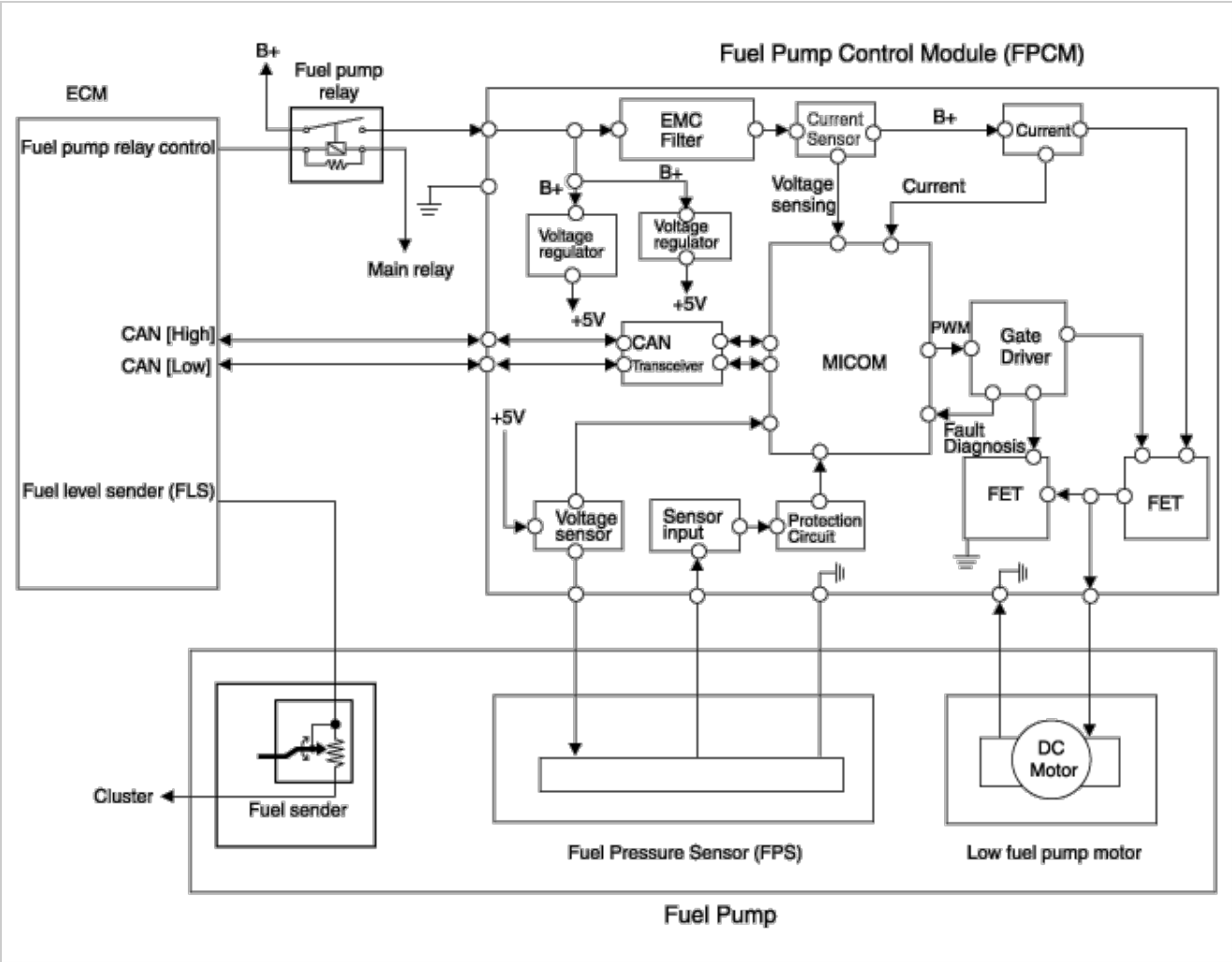

Circuit Diagram

Terminal Illustration

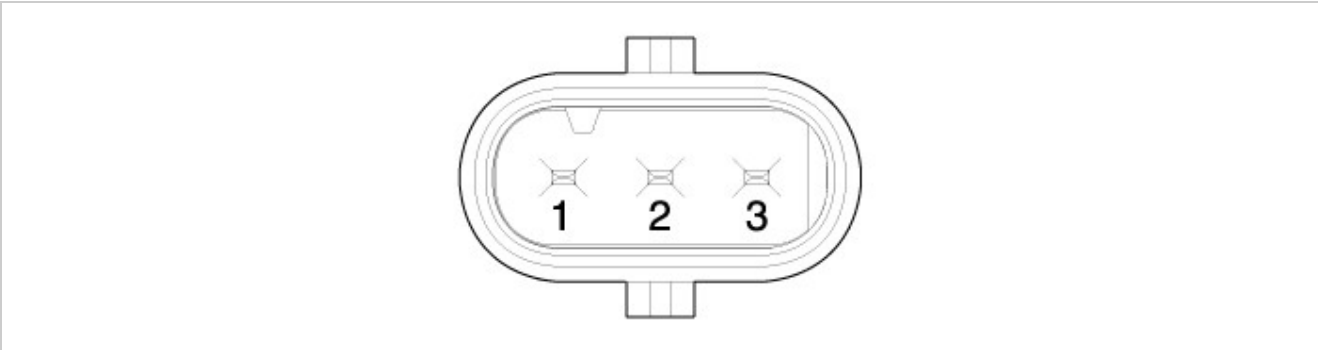

Terminal Function

Pin No.	Discription	Connected to
1	Fuel pressure sensor (FPS) Power supply (+5V)	Fuel Pressure Sensor (FPS)
2	Fuel pressure sensor (FPS) signal input	Fuel Pressure Sensor (FPS)
3	Fuel pressure sensor (FPS) ground (-)	Fuel Pressure Sensor (FPS)

Removal

1. Turn the ignition switch OFF and disconnect the battery negative (-) cable.
2. Remove the rear seat cushion.
   (Refer to Body - "Rear Seat Assembly")
3. Remove the fuel pump service cover (A).

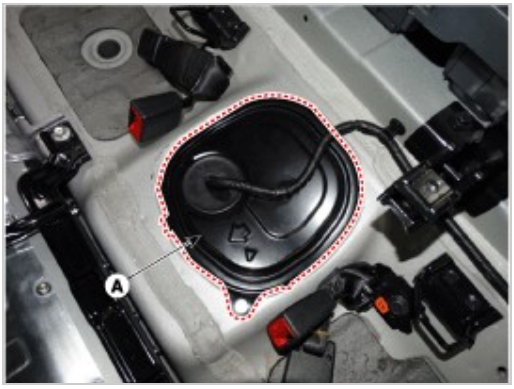

NOTICE

- When reinstalling a protective cover for a fuel pump, remove the existing butyl tape and apply a new one.
- Before assembling the protective cover, ensure that the temperature of the butyl is about 30°C using a hair dryer or a heat gun.

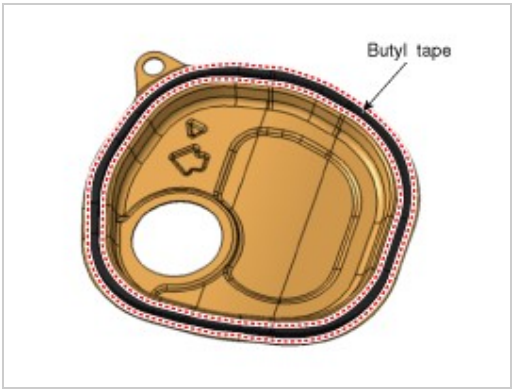

NOTICE

- When installing the protective cover for the fuel pump, pay attention to the installation direction of the grommet and the protective cover.
  - The arrow (A) should be in the forward direction of the car.
  - Align the bulging part of the vehicle body (B) with the hole of the protective cover.
  - Align the bulging part of the grommet (C) with the bulging part of the protective cover.

4. Disconnect the fuel pressure sensor connector (B).

5. Remove the fuel pressure sensor fixing pin (A).
6. Remov ethe fuel pressure sensor (B) from the fuel pump.

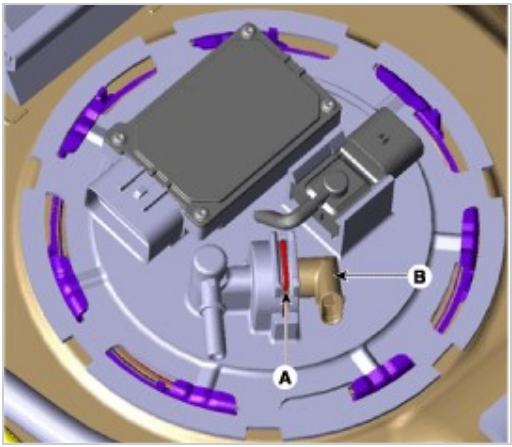

Installation

1. Install in the reverse order of removal.

Engine Control/Fuel System

Removal

WARNING

- In case of removing the high pressure fuel pump, high pressure fuel pipe, delivery pipe, and injector, there may be injury caused by leakage of the high pressure fuel. So don't do any repair work right after engine stops.

1. Turn the ignition switch OFF and disconnect the battery negative (-) cable.
2. Release the residual pressure in fuel line.
   (Refer to the Fuel Delivery System - Repair Procedures - "Release Residual Pressure in Fuel Line").

CAUTION

- When removing the fuel pump fuse, a Diagnostic Trouble Code (DTC) may occur.
- Delete the code with the GDS after completion of "Release Residual Pressure in Fuel Line" work.

3. Remove the intake manifold.
   (Refer to Engine Mechanical System - "Intake Manifold")
4. Remove the high pressure fuel pipe (A).
5. Remove the delivery pipe and injector assembly from the engine after loosening the mounting bolts (B).

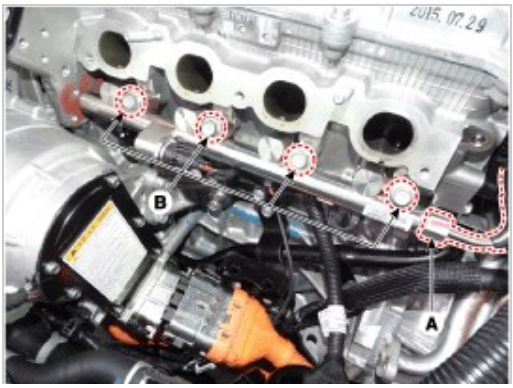

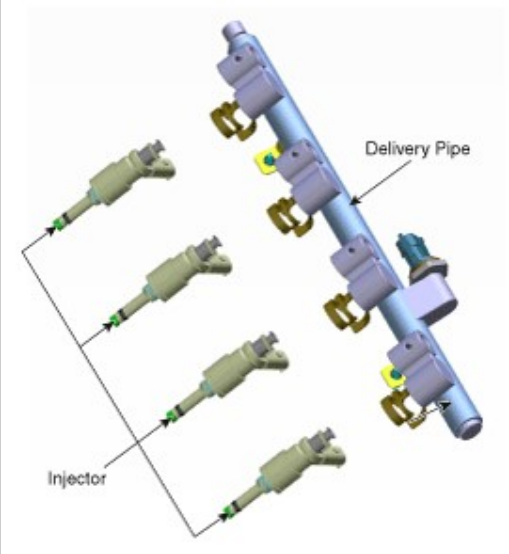

Installation

WARNING
- Do not use already used injector fixing clip again.

WARNING
- Install the component with the specified torques.
- Note that internal damage may occur when the component is dropped. In this case, use it after inspecting.

WARNING
- Apply engine oil to the injector O-ring.
- Do not use already used injector O-ring again.

WARNING
- Do not use already used bolt again.

WARNING
- When insert the injector, be careful not to damage the injector tip.

1. Install in the reverse order of removal.
   Delivery pipe installation bolt:
   18.6 - 23.5 N.m (1.9 - 2.4 kgf.m, 13.7 - 17.4 lb-ft)
   High pressure fuel pipe installation nut:
   26.5 - 32.4 N.m (2.7 - 3.3 kgf.m, 19.5 - 23.9 lb-ft)

Removal

WARNING
- In case of removing the high pressure fuel pump, high pressure fuel pipe, delivery pipe, and injector, there may be injury caused by leakage of the high pressure fuel. So don't do any repair work right after engine stops.

1. Turn the ignition switch OFF and disconnect the battery negative (-) cable.
2. Release the residual pressure in fuel line.
   (Refer to the Fuel Delivery System - Repair Procedures - "Release Residual Pressure in Fuel Line").

   CAUTION
   - When removing the fuel pump fuse, a Diagnostic Trouble Code (DTC) may occur.
   - Delete the code with the GDS after completion of "Release Residual Pressure in Fuel Line" work.

3. Remove the air cleaner and intake hose.
   (Refer to Mechanical System - "Air Cleaner")
4. Disconnect the fuel pressure control valve connector (A).

5. Disconnect the fuel feed tube quick-connector (B).

NOTICE

- Open the clamp cover (B) before disconnect the quick connector. (If the clip is applied)

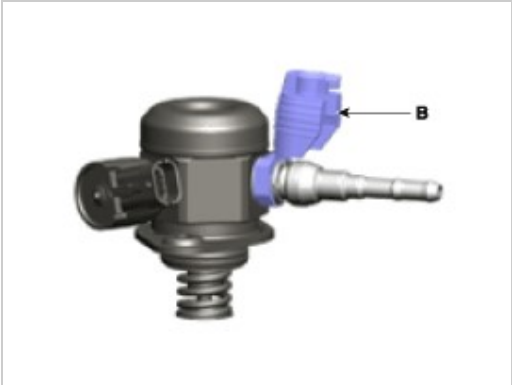

CAUTION

- When removing the quick-connnector with the clip removing tool (A), be careful not to damage the plastic clip (B).
- If the clip is damaged, fuel line leak can be occurred due to a bad connection.

6. Remove the high pressure fuel pipe.
   (1) Remove the installation nut (A) from the high pressure fuel pump with the special service tool [SST No.: 09314-3Q100 or 09314-27130].

   (2) Remove the installation nut (B) from the delivery pipe with the special service tool [SST No.: 09314-3Q100]

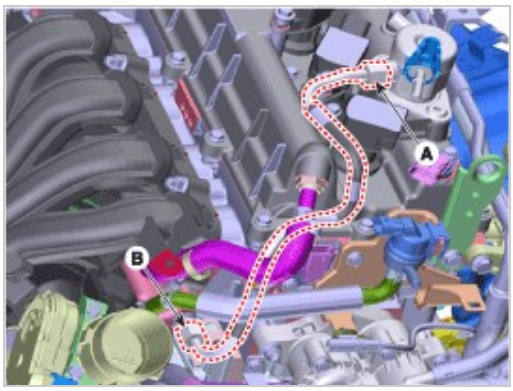

(3) Remove the function block (A), and then remove the high pressure fuel pipe.

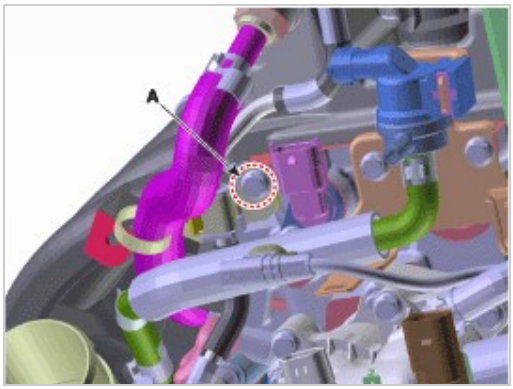

7. Remove the installation bolts (E), and then remove the high pressure fuel pump from the cylinder head assembly.

⚠ CAUTION

- Unscrew in turn the two bolts in small step (0.5 turns). In case of fully unscrewing one of the two bolts with the other bolt installed, the housing surface of the cylinder head may be broken because of tension of the pump spring.

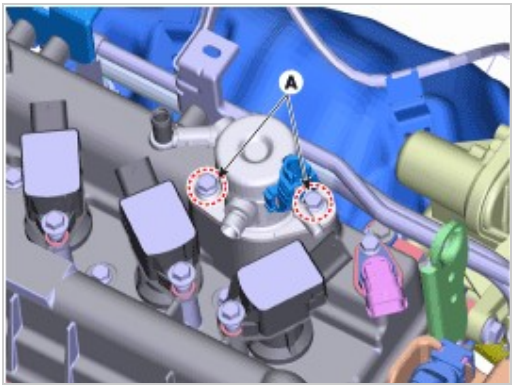

Installation

⚠ WARNING

- Be sure to check the low pressure fuel hose quick-connector (A) is completely connected to the high pressure fuel pump until a confirmation "click" sound is heard.

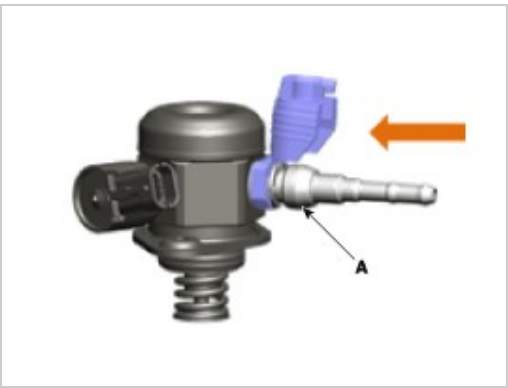

- Be sure to re-check the low pressure fuel hose is completely connected to the high pressure fuel pump by pulling it after connecting.
- Install the clamp cover (A) to tighten the quick-connector completely.

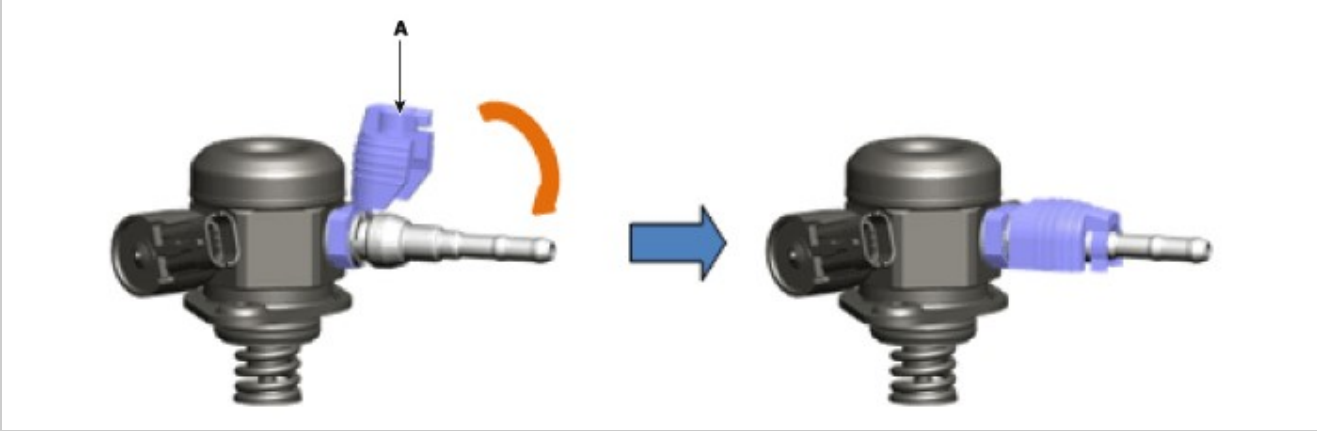

- Be sure to install the high pressure fuel pipe (B) with the specified torques.

- Securely inspect leakage of all fuel line connection parts at engine start condition.

CAUTION

- Before installing the high pressure fuel pump, position the roller tappet in the lowest position by rotating the crankshaft. Otherwise the installation bolts may be broken because of tension of the pump spring.

CAUTION

- Do not reuse the used bolt.

CAUTION

- Do not reuse the used high pressure fuel pipe.

CAUTION

- When tightening the installation bolts of the high pressure fuel pump, tighten in turn the bolts in small step (0.5 turns) after tightening them with hand-screwed torque.

CAUTION

- Install the component with the specified torques.
- First hand-tighten the fasteners fully until they are not fastened any more in order to have them inserted in place and then completely tighten to the specified torque using a torque wrench.
  If not tightening the bolts or nuts in a straight line with the mating bolt holes or fittings, it may cause a fuel leak due to broken threads.

CAUTION

- Note that internal damage may occur when the component is dropped. In this case, use it after inspecting.

CAUTION

- Apply engine oil to the O-ring (A) of the high pressure fuel pump, the roller tappet (B), and the protrusion (C). Also apply engine oil to the groove on the location where the protrusion (C) is installed.

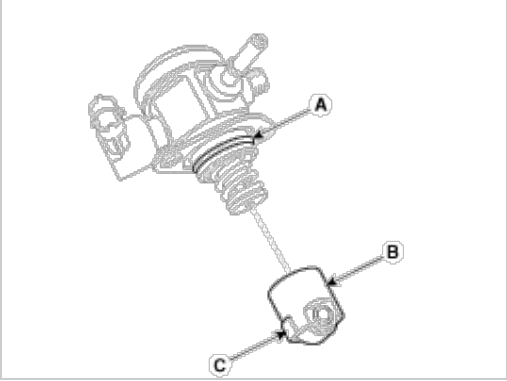

1. Install in the reverse order of removal.

NOTICE

- Use the special service tool [SST No.: 09314-3Q100 or 09314-27130] to install the high pressure fuel pipe.

High pressure fuel pump installation bolt:
12.8 - 14.7 N.m (1.3 - 1.5 kgf.m, 9.4 - 10.9 lb-ft)
High pressure fuel pipe installation nut:
26.5 - 32.4 N.m (2.7 - 3.3 kgf.m, 19.5 - 23.9 lb-ft)
High pressure fuel pipe function block installation bolt:
7.8 - 11.8 N.m (0.8 - 1.2 kgf.m, 5.8 - 8.7 lb-ft)