Safety Precaution

Precautions to take before servicing high voltage system

DANGER

- Since hybrid vehicles contain a high voltage battery, if the high voltage system or vehicles are handled incorrectly, this might lead to a serious accidents like electric shock and electric leakage.

WARNING

- Be sure to shut off the high voltage by removing the safety plug before performing inspection or repairing the high voltage system.
  (Refer to "High Voltage Shut-off Procedures")
- The responsible worker keeps the removed safety plug to prevent the plug from being connected by mistake.
- Do not keep any metal objects (watch, ring etc.) while working on the high voltage system, which it can cause serious accidents like electric shock.
- Before beginning work on the high voltage system, the worker should wear personal protective equipment to prevent safety accidents.
  (Refer to "Personal Protective Equipment")
- Never allow workers who are not wear personal protective equipment to touch the high voltage system. High voltage components should be covered with an insulation sheet to prevent safety accidents.
- Use insulation tools when working on the high voltage system.
- Put the removed high voltage components on the insulation mat.

Information

- All the high voltage wiring and connectors are orange.
- A caution label for high voltage is attached to the high voltage components.
- High voltage components :
  High Voltage Battery Pack Assembly, Power Relay Assembly (PRA), BMS ECU, Hybrid Power Control Unit (HPCU), Hybrid Drive Motor, HSG, Electric A/C Compressor, Low DC/DC Converter (LDC), Power Cable, Electric Compressor etc.

CAUTION

- Inform of danger of high voltage by putting the "high voltage caution" on the vehicle as image below.

SAMPLE

DANGER

High Voltage : Do not touch during operation.

Person in charge : _____

Copy this page and put it after folding on the roof of the vehicle in service.

DANGER

High Voltage : Do not touch during operation.

Person in charge : _____

Personal Protective Equipment

Name	Illustration	Description
Insulation glove		Used when inspecting or working on the high voltage components [Insulation performance : 1000V / 300A or above]
Insulation shoes		Used when inspecting or working on the high voltage components

Insulation clothes		Used in the case below • During Removal & installation or inspection of the high voltage battery terminals or wiring, which spark might happen. • During working on the high voltage battery pack assembly.
Insulation helmet	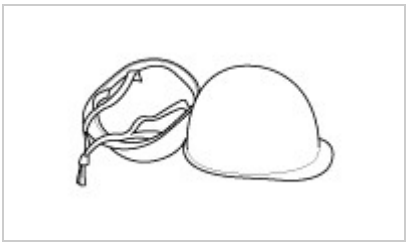	
Safety glasses		
Face shield		
Insulation mat	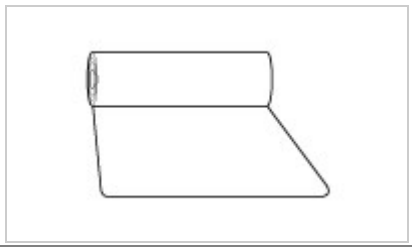	Putting the removed high voltage components on the insulation mat to prevent safety accidents.
Insulation sheet	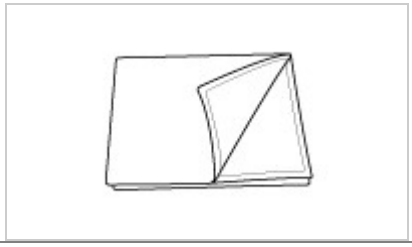	Covering the high voltage components with insulation sheet to prevent people who don’t wear the personal protective equipment from safety accidents.

Precautions to take when handling power cable

- Immediately insulate the high voltage terminal after reconnecting the terminal (use insulation tape).
- Tighten the high voltage terminal screw to spec torque.
- Be careful that (+) and (-) terminals do not come in contact when connecting or disconnecting power cable and busbar.

Precautions to take when handling high voltage battery

- When transporting high voltage battery, be sure to keep it flat and leveled. Failure to do so may decrease the battery performance and/or its life-span.
- High voltage battery"s performance may decrease if it is exposed to high temperature for a lengthy period. As a result, heat-treatment after painting must not exceed 70°C/ 30 minutes, or 80°C/ 20 minutes.

Precautions in case of fire on high voltage battery system

- If the fire occurs indoor, ventilate the area to let out hydrogen gas.
- ACB fire extinguisher is recommended for putting out the fire. (water may also be used).

Precautions in case of high voltage battery gas or electrolyte leakage

-

Turn OFF the Start button. Keep the Smart Key at least 2 meters away from the vehicle to prevent unintended engine start.

- Gas is hydrogen and alkaline vapor. If the leakage is indoor, ventilate the area immediately and evacuate to a safe location.
- If the leaked liquid comes in contact with skin, immediately neutralize the affected area with boric acid solution, then clean with tap water or saline solution.
- If the leaked vapor or liquid gets in the eye, immediately clean the affected eye with water then get medical attention.
- If the gas leakage is caused by high temperature, then do NOT use the battery until the high voltage battery fully cools down to room temperature.

Precautions when handling the vehicle after an accident

- Be sure to wear insulated gloves (or rubber gloves), protective goggles, insulated suite, and insulated boots.
- Do NOT touch bare cable under any condition.
  (Refer to "Precautions when handling power cable")
- In case of vehicle fire, put out the fire with ABC extinguisher. Do NOT use water (usage of large volume of water is okay, but small volume can worsen the situation).
- If more than half of the vehicle is submerged, then do NOT go near the Safety Switch or other high voltage related components. If such a component must be accessed, then move the vehicle to the safe location first before handling the component.
- Gas is hydrogen and alkaline vapor. If the leakage is indoor, ventilate the area immediately and evacuate to a safe location.
- If the leaked liquid comes in contact with skin, immediately neutralize the affected area with boric acid solution, then clean with tap water or saline solution.
- Refer to "High voltage cut-off procedure" if the high voltage needs to be cut off.

Preparations when servicing the accident vehicle

- Be sure to wear insulated gloves (or rubber gloves), protective goggles, insulated suite, and insulated boots.
- Boric Acid Power or Solution
- ABC Extinguisher
- Towel for cleaning electrolyte
- Vinyl tape (for insulating terminal)
- Mega ohm tester (for checking high voltage)

Precautions in case HEV is left unattended for a lengthy period

- Turn OFF the Start button. Keep the Smart Key at least 2 meters away from the vehicle to prevent unintended engine start.
- We recommend that HEV is driven at least 1 time for over 30 minutes every 2 months to protect and manage the high voltage battery (inquire at relevant team in HMC).
- When inspecting or exchanging the auxiliary battery, check high voltage battery SOC reset related problems.

Hybrid Vehicle Refrigerant Recovery / Charging Precautions

- Since the electric compressor uses high-voltage, you should use POE oil which have high Volumetric Resistivity.
- Do not use the same A/C recovery / charging station as conventional belt-driven compressors.

WARNING

- If the POE oil of the system gets mixed with PAG oil, then dielectric breakdown due to decreased volumetric Resistivity can occur and inoperative A/C compressor may result, A/C compressor may not work

High Voltage Shut-off Procedures

WARNING

- Be sure to read and follow the "General Safety Information and Caution" before doing any work related with the high voltage system. Failure to follow the safety instructions may result in serious electrical injuries.
- Be sure to read and follow the "High Voltage Shut-off Procedures" before doing any work related with the high voltage system. Failure to follow the safety instructions may result in serious electrical injuries.

Information

- High voltage components :
  High Voltage Battery Pack Assembly, Power Relay Assembly (PRA), BMS ECU, Hybrid Power Control Unit (HPCU), Hybrid Drive Motor, HSG, Electric A/C Compressor, Low DC/DC Converter (LDC), Power Cable, Electric Compressor etc.

1. Turn the ignition switch OFF and disconnect the auxiliary 12V battery negative (-) terminal.

2. Remove the safety plug cover (A).

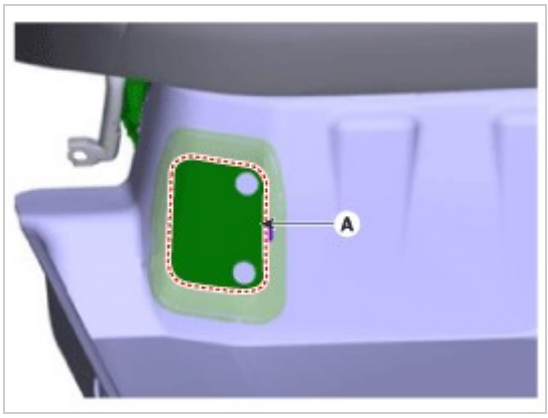

3. Unfasten the hook (A) and then remove the safety plug (C) by pulling the lever (B) to the direction of arrow.

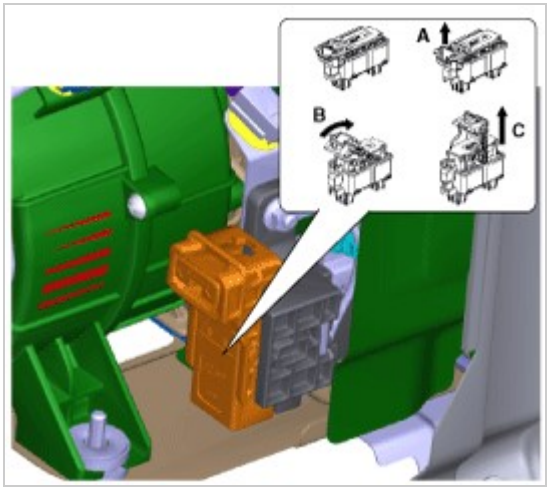

4. Wait for more than 5 minutes so that the capacitor in the high voltage system can be fully discharged.
5. Measure the voltage between the inverter terminals to check that the capacitor in the inverter is discharged completely.
   (1) Remove air cleaner assembly and air duct.
   (Refer to Engine Mechanical System - "Air Cleaner")
   (2) Disconnect the inverter power cable (A).

Information

- Disconnect the inverter power cable as the procedures below.

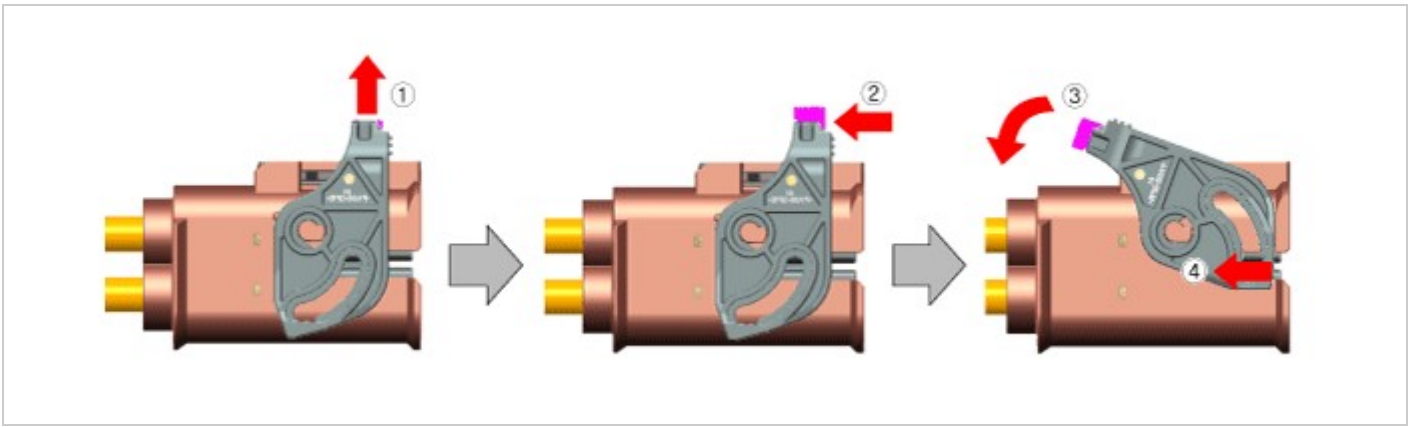

(3) Measure the voltage between the inverter (+) terminal and the inverter (-) terminal.

Less than 30V : High voltage circuit properly shut
More than 30V : Fault on high voltage circuit

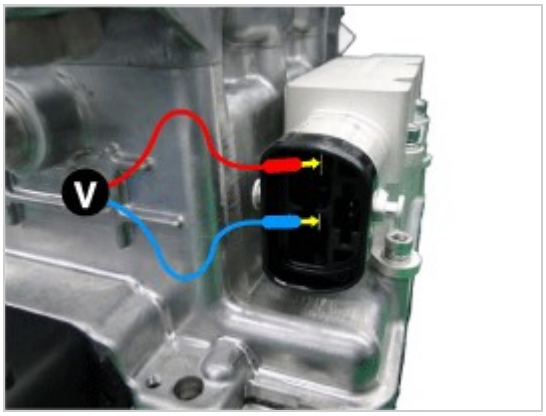

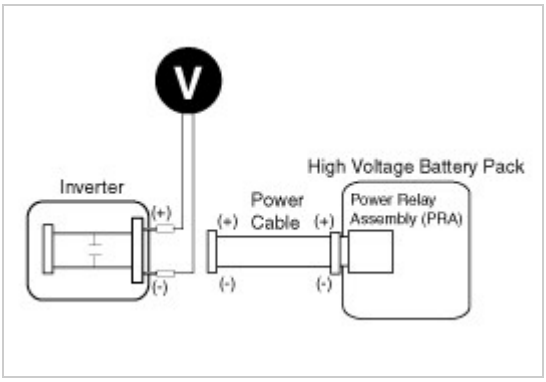

WARNING

- If measured more than 30V, check if the safety plug is removed completely.If measured more than 30V despite the safety plug is removed, there can be serious problems on the high voltage circuit. In this case, check DTC and never touch the high voltage system circuits.

Emission Control System

Description

Emissions Control System consists of three major systems.

- The Crankcase Emission Control System prevents blow-by gas from releasing into the atmosphere. This system recycles gas back into the intake manifold (Closed Crankcase Ventilation Type).
- The Evaporative Emission Control System prevents evaporative gas from releasing into the atmosphere. This system burns gas at appropriate engine operating condition after gathering it in the canister.
- The Exhaust Emission Control System converts the three pollutants [hydrocarbons (HC), carbon monoxide (CO), and oxides of nitrogen (NOx)] into harmless substances by using the 3-way catalytic converter.

Emission Control System

Specifications

Purge Control Solenoid Valve (PCSV)

▷ Specification

Item	Specification
Coil Resistance (Ω)	22.0 - 26.0 [20°C(68°F)]

Fuel Tank Pressure Sensor (FTPS)

▷ Type: Piezo - Resistivity type

▷ Specification

Pressure [kPa (kgf/cm², in H2O)	Output Voltage (V)
-6.67 (-0.068, -26.8)	0.5
0	2.5
+6.67 (0.068, 26.8)	4.5

Canister Close Valve (CCV)

▷ Specification

Item	Specification

Coil Resistance (Ω)	15.5 - 18.5 [20°C(68°F)]

Tightening Torques

Item	kgf.m	N.m	lb-ft
Positive crankcase ventilation valve installation	0.2 - 0.3	1.88 - 2.82	1.4 - 2.2
Canister installation bolt / nut	0.4 - 0.6	3.9 - 5.9	2.9 - 4.3

Emission Control System

Troubleshooting

Symptom	Suspect area
Engine will not start or hard to start	Vapor hose damaged or disconnected
Engine struggles to start	Malfunction of the Purge Control Solenoid Valve
Rough idle or engine stalls	Vapor hose damaged or disconnected
	Malfunction of the PCV valve
Rough idle	Malfunction of the Evaporative Emission Control System
Excessive oil consumption	Positive crankcase ventilation line clogged

Emission Control System

Schematic Diagram

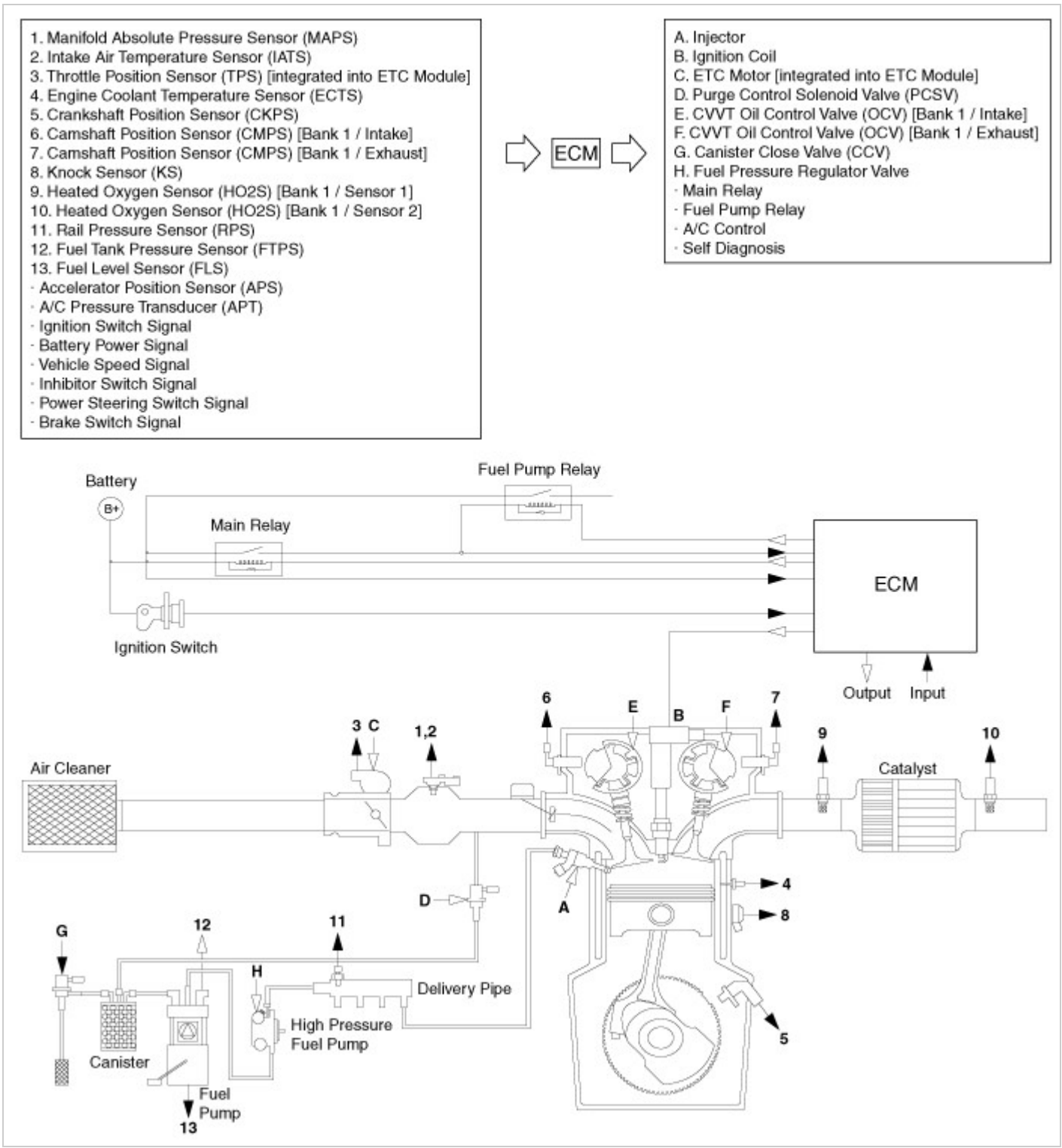

Emission Control System

Components Location

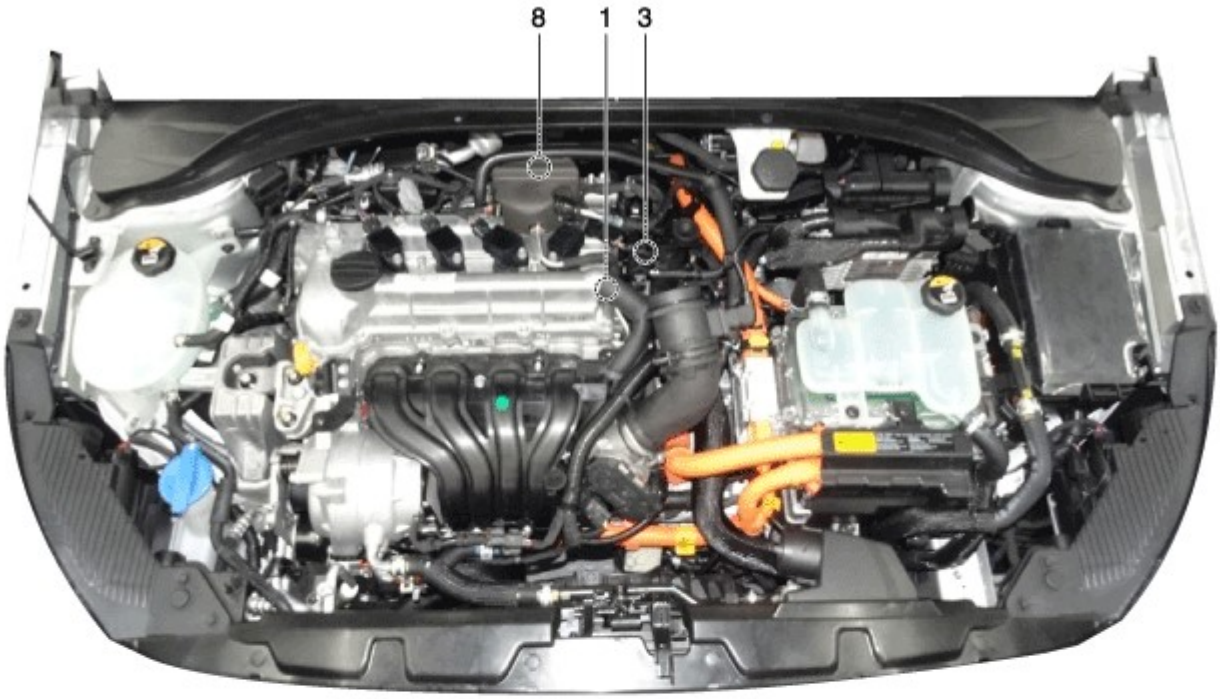

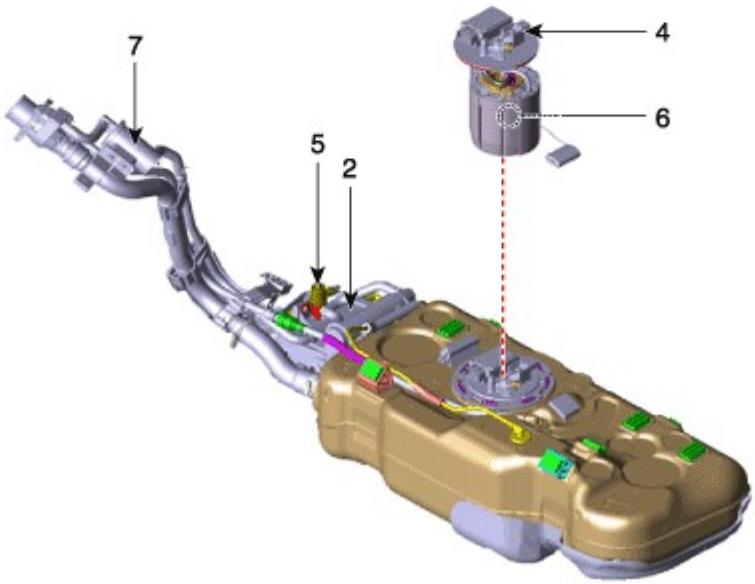

1. PCV Valve
2. Canister
3. Purge control solenoid valve (PCSV)
4. Fuel Tank Pressure Sensor (FTPS)
5. Canister Close Valve (CCV)
6. Fuel level sensor (FLS)
7. Fuel tank air Filter
8. Catalytic converter (WCC/UCC)

1. PCV Valve	2. Canister
	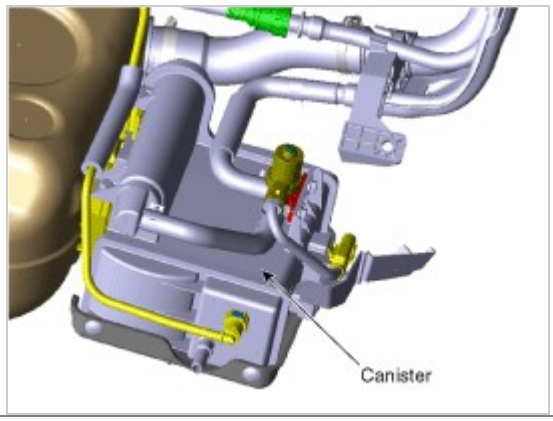
3. Purge control solenoid valve (PCSV)	4. Fuel Tank Pressure Sensor (FTPS)

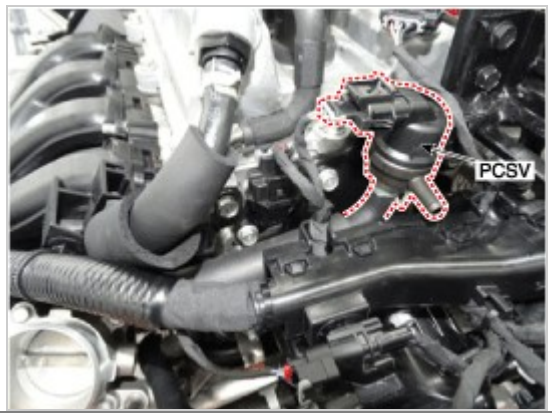

5. Canister Close Valve (CCV)

6. Fuel level sensor (FLS)

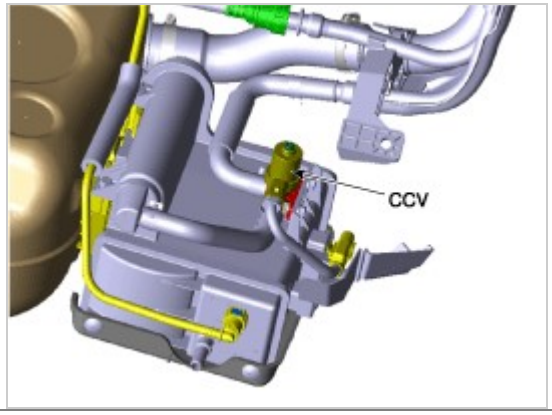

7. Fuel tank air Filter

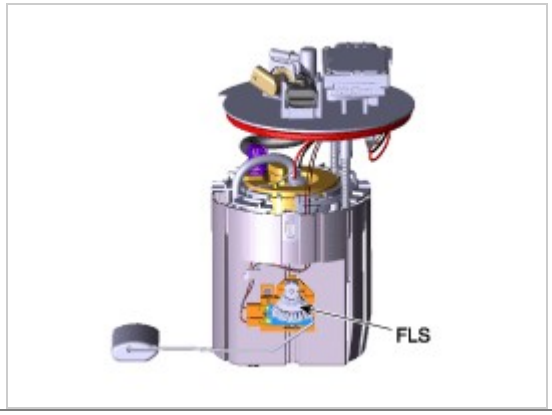

8. Catalytic converter (WCC)

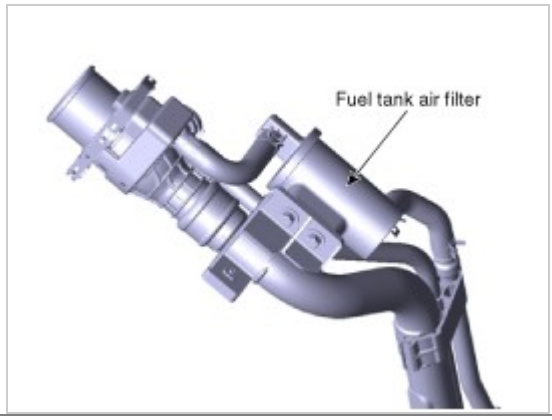

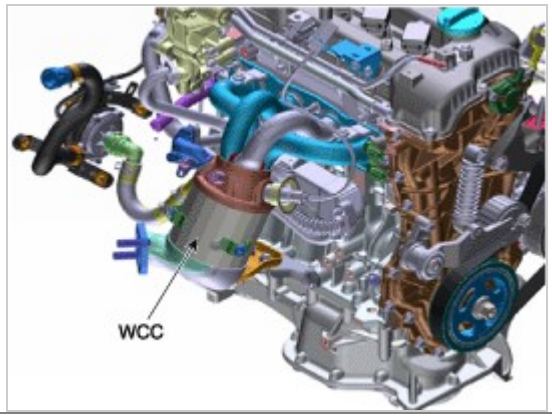

8. Catalytic converter (UCC)

Emission Control System

Schematic Diagram

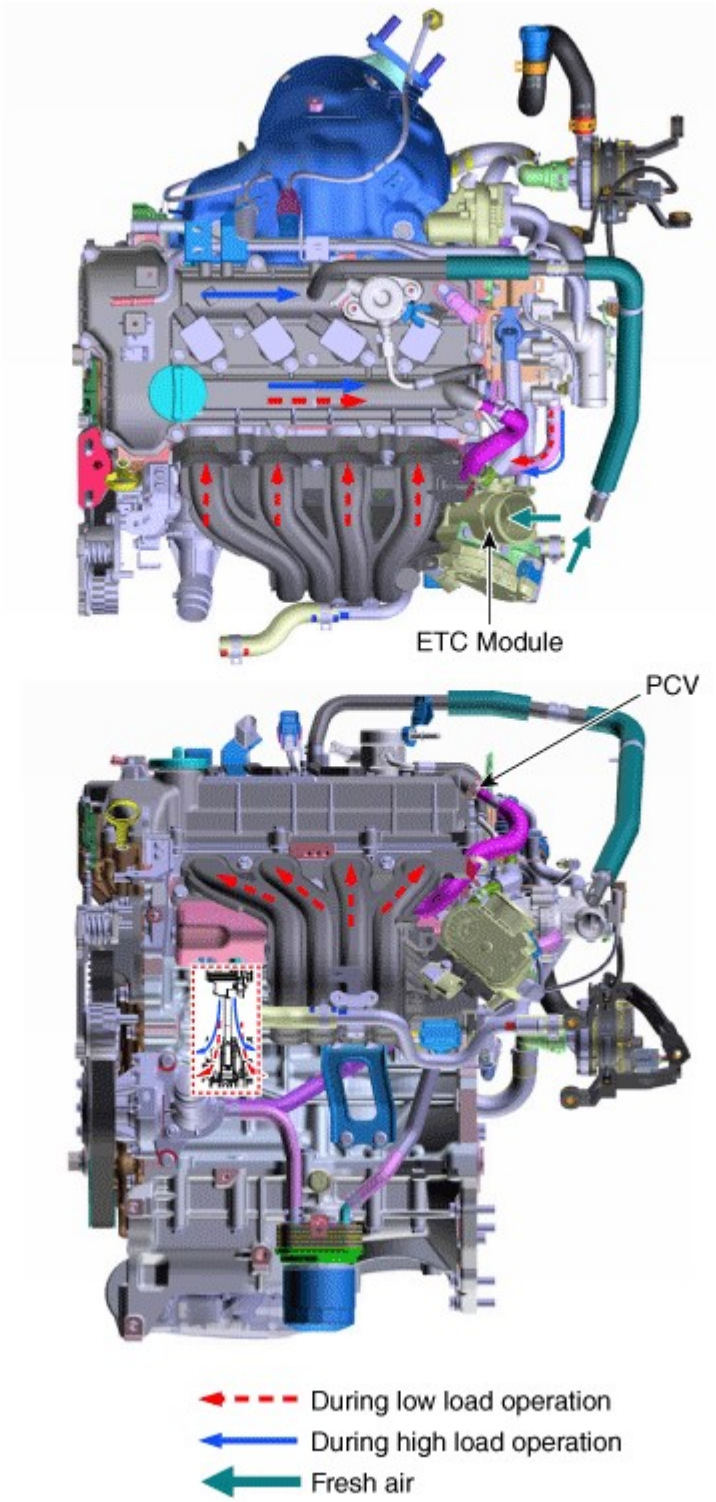

Inspection

1. After disconnecting the vapor hose from the PCV valve, remove the PCV valve.
2. Reconnect the PCV valve to the vapor hose.
3. Run the engine at idle, then put a finger over the open end of the PCV valve and make sure that intake manifold vacuum can be felt.

NOTICE

- The plunger inside the PCV valve will move back and forth at vacuum.

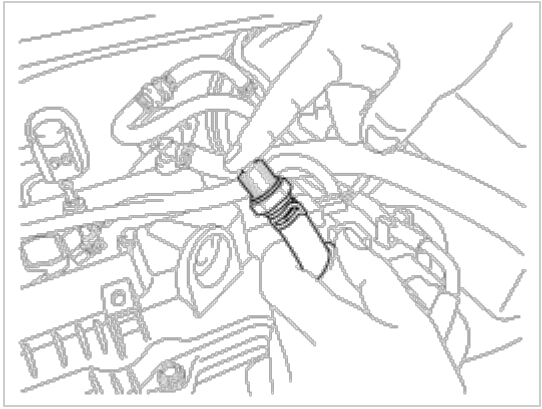

4. If the vacuum is not felt inspect PCV operation, if operating correctly clean or replace the vapor hose.

Emission Control System

Operation Principle

Engine Condition	Not Running	Idling or Decelerating	Normal Operation	Accelerating and High Load
Vacuum in Intake Manifold	0	High	Moderate	Low
PCV Valve	Close	Slightly Open	Properly Open	Fully Open
Blow-by Gas Flow	0	Small	Medium	Large
Schematic Diagram	Intake Manifold 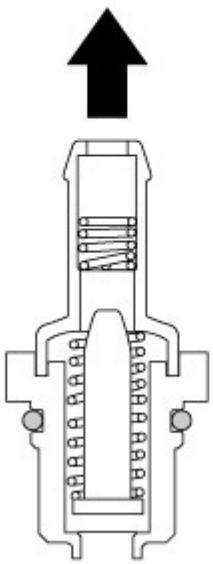	Intake Manifold 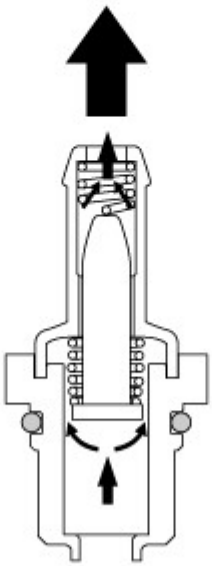	Intake Manifold 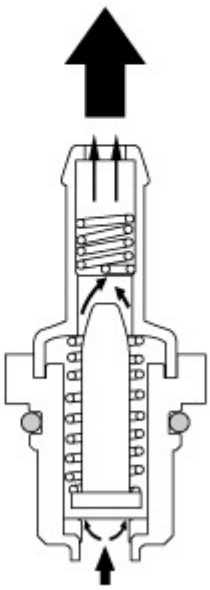	Intake Manifold 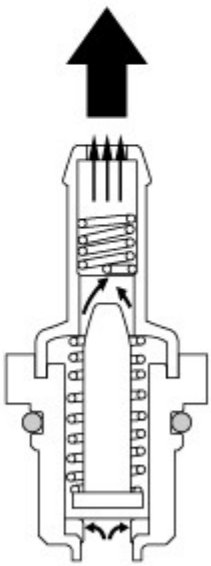

Emission Control System

Removal

1. Disconnect the vapor hose (A).
2. Remove the PCV valve (B).

Inspection

1. Insert a thin stick (A) into the PCV valve (B) from the threaded side to check that the plunger movement.

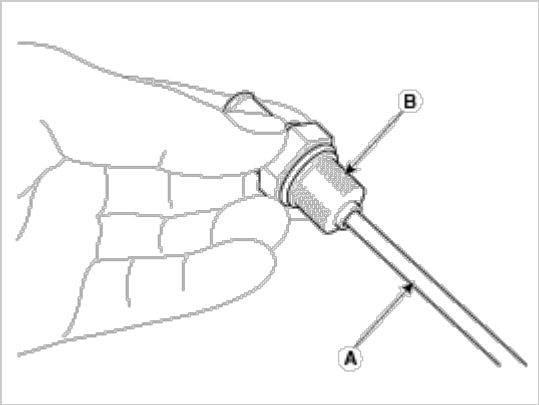

NOTICE

- If the plunger does not move (PCV valve is clogged), clean or replace the valve.

Installation

1. Install in the reverse order of removal.

PCV valve installation:
1.88 - 2.82 N.m (0.2 - 0.3 kgf.m, 1.4 - 2.2 lb-ft)

Emission Control System

Schematic Diagram

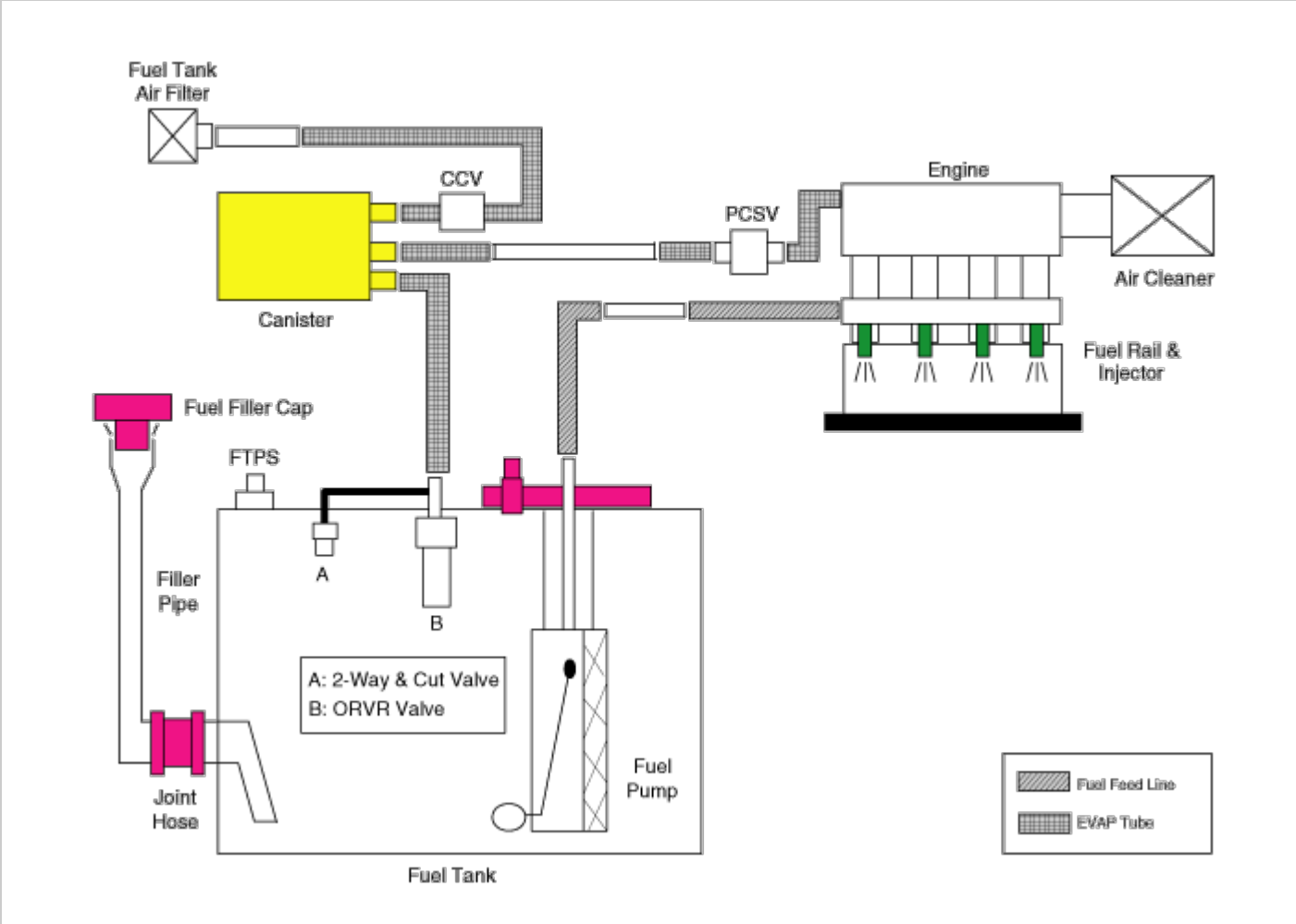

Canister

The Canister is filled with charcoal and absorbs evaporated fuel vapor from the fuel tank. The gathered fuel vapor in canister is drawn into the intake manifold by the ECM/PCM when appropriate conditions are set.

Purge Control Solenoid Valve (PCSV)

The Purge Control Solenoid Valve (PCSV) is installed in the passage connecting the canister to the intake manifold. It is a duty type solenoid valve and is operated by ECM/PCM signal.

To draw the absorbed vapor into the intake manifold, the ECM/PCM will open the PCSV, otherwise the passage remains closed.

Fuel Filler Cap

A ratchet tightening device in the threaded fuel filler cap reduces the chances of incorrect installation, when sealing the fuel filler. After the gasket on the fuel filler cap and the fill neck flange make contact, the ratchet produces a loud clicking noise indicating the seal has been set.

Fuel Tank Pressure Sensor (FTPS)

The Fuel Tank Pressure Sensor (FTPS) is an integral part of the monitoring system. The FTPS checks Purge Control Solenoid Valve (PCSV) operation and leaks in the Evaporative Emission Control System by monitoring pressure and vacuum level in the fuel tank during PCSV operating cycles.

Canister Close Valve (CCV)

The Canister Close Valve (CCV) is located between the canister and the fuel tank air filter. It closes off the air inlet to the canister for the Evaporative Emissions System and also prevents fuel vapors from escaping from the Canister when the vehicle is not operating.

Evaporative System Monitoring

The Evaporative Emission Control Monitoring System monitors fuel vapor generation, evacuation, and a leakage check step. At first, the OBD-II system checks if vapor generation due to fuel temperature is small enough to start monitoring. Then it evacuates the evaporative system by means of PCSV with ramp in order to maintain a certain vacuum level. The final step is to check if there is vacuum loss by any leakage of the system.

Vapor Generation Checking

During the stabilization period, the PCSV and the CCV are closed. The system pressure is measured as starting pressure (DP_A). After a certain defined period (T1), the system pressure (DP_B) is measured again and the difference from the starting pressure is calculated. If this difference (DP_B - DP_A) is bigger than the threshold, there should be excessive vapor pressure and the monitor is aborted for next check. On the contrary, if the difference is lower than the negative threshold, the PCSV is regarded as having a malfunction such as clogged at open position.

Large EVAP Leak Detection

The PCSV is opened with a certain ramp for the pressure to reach down to a certain level. If the pressure can’t be lowered below a threshold, the system is regarded as having a fuel cap-open or having a large leak.

Leaking Checking

The PCSV is closed and the system waits for a period to get stabilized pressure. During checking period (T2), the system measures the beginning and the end of the system pressure (DP_C, DP_D). The diagnosis value is the pressure difference corrected by the natural vapor generation (DP_B - DP_A) rate from the vapor generation check step.

Inspection

[System Inspection]

1. Disconnect the vapor hose from the throttle body and connect a vacuum pump to the nipple on the throttle body.
2. Check the following points with applied vacuum using a vacuum pump.
   - At Cold Engine [Engine Coolant Temperature < 60°C(140°F)]

Engine Operating Condition	Applied Vacuum	Result
Idle	0.5kgf/cm² (50kPa,7.3psi)	Vacuum is held
3,000rpm		

   - At Warmed Engine [Engine Coolant Temperature > 80°C(176°F)]

Engine Operating Condition	Applied Vacuum	Result
Idle	0.5kgf/cm² (50kPa,7.3psi)	Vacuum is held
Within 3 minutes after engine start at 3,000 rpm	Try to apply vacuum	Vacuum is released
In 3 minutes after engine start at 3,000 rpm	0.5kgf/cm² (50kPa,7.3psi)	Vacuum will be held momentarily, after which, it will be released

[PCSV Inspection]

1. Turn ignition switch OFF and disconnect the negative (-) battery cable.
2. Disconnect the PCSV connector (A).
3. Disconnect the vapor hose (B) which is connected to the intake manifold from the PCSV.

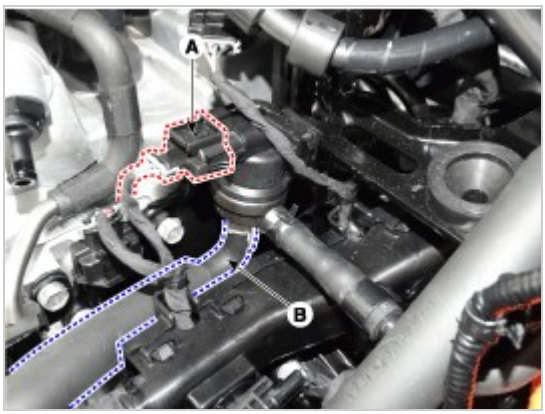

4. After connecting a vacuum pump to the nipple, apply vacuum.
5. With the PCSV control line grounded, check the valve operation with battery voltage applied to the PCSV(Open) and removed(Closed).

Battery Voltage	Valve	Vacuum
Connected	Open	Released
Disconnected	Close	Maintained

6. Measure the coil resistance of the PCSV.

Specifications:22.0 - 26.0Ω [20°C(68°F)]

[EVAP. Leakage Test]

1. Select "Evap. Leakage Test".

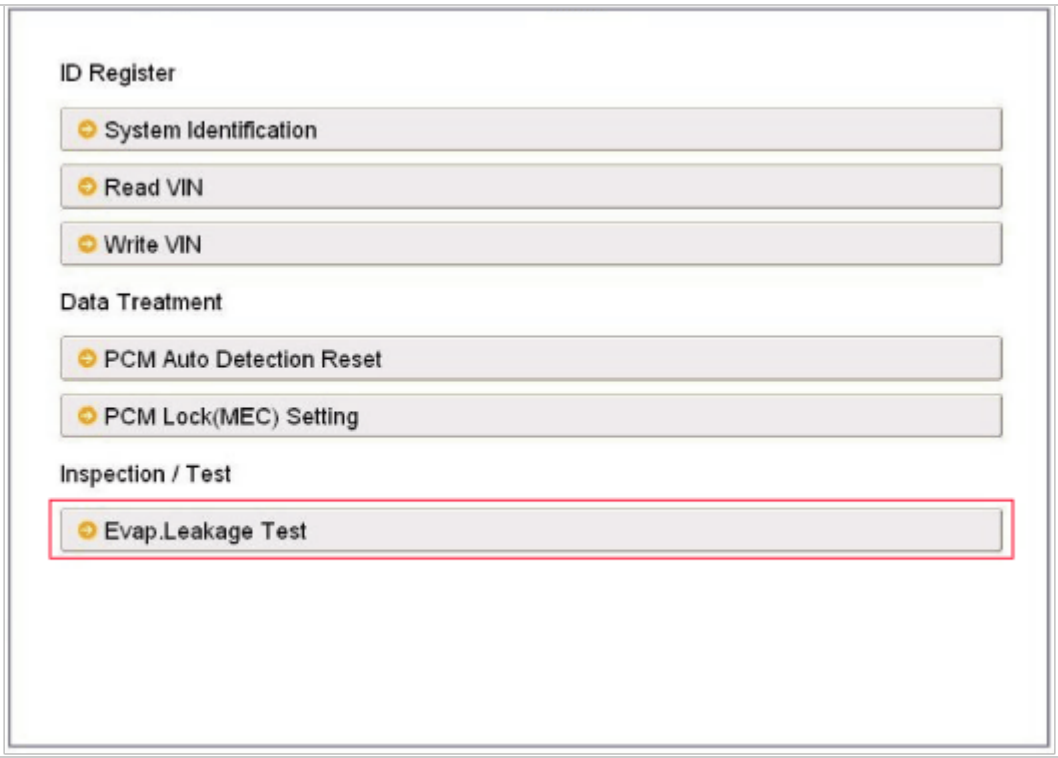

2. Proceed with the test according to the screen introductions.

NOTICE

• [EVAP. Leakage Test Condition]
– Ignition key on , Engine at idle
– No Trouble Code
– Fuel Level : 15-85 %
– Select Lever Position : P or N
– ECT : Below 105°C (221°F)

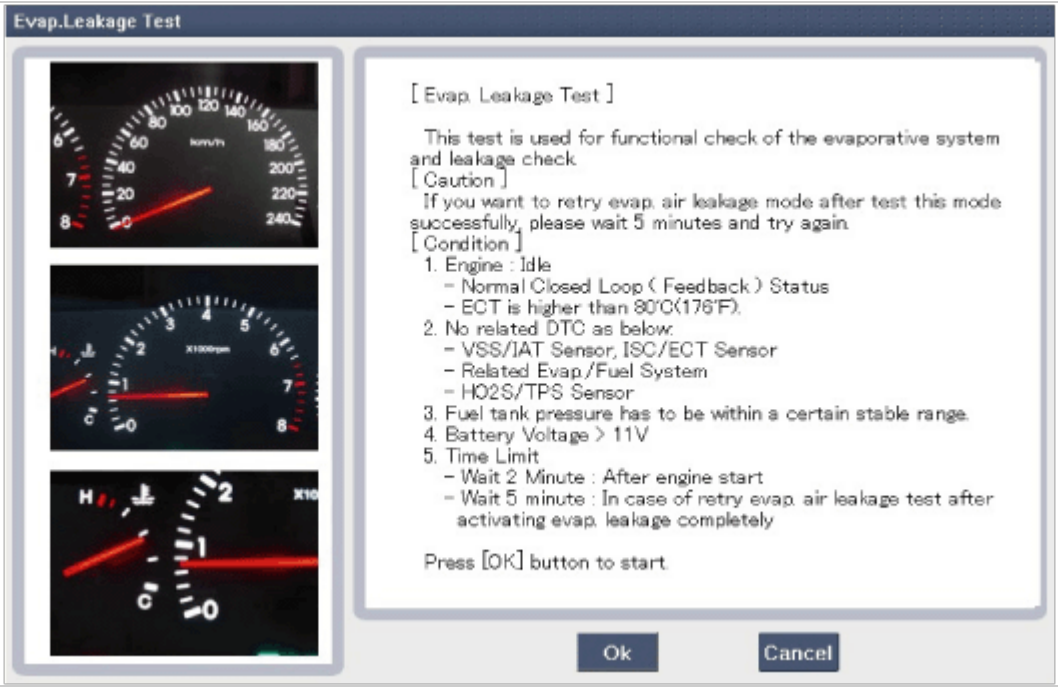

Emission Control System

Removal

1. Turn ignition switch OFF and disconnect the negative (-) battery cable.
2. Remove the fuel tank.
   (Refer to Engine Control/Fuel System - "Fuel Tank")
3. Disconnect the vapor tube quick-connector (A).

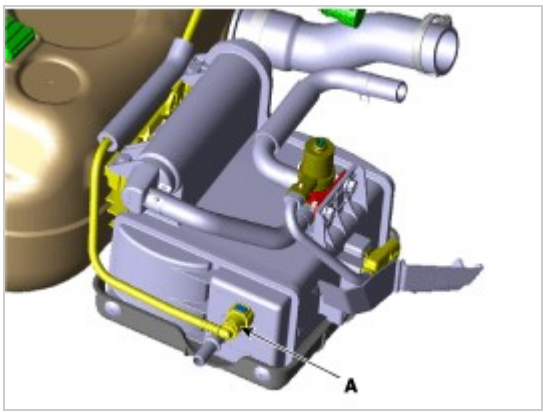

4. Remove the canister (B) from the fuel tank after loosening the bolts (A).

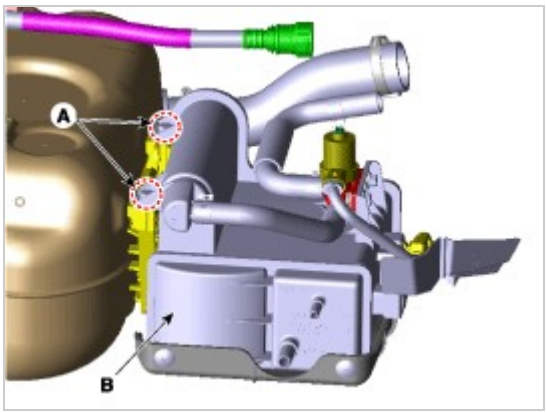

5. Disconnect the vapor hose (A).

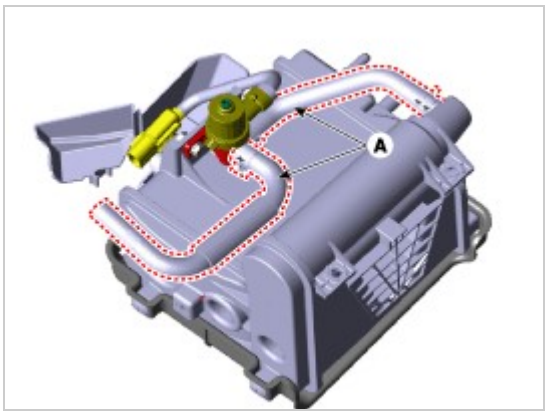

6. Remove the canister close valve (B) after loosening the bolts (A).

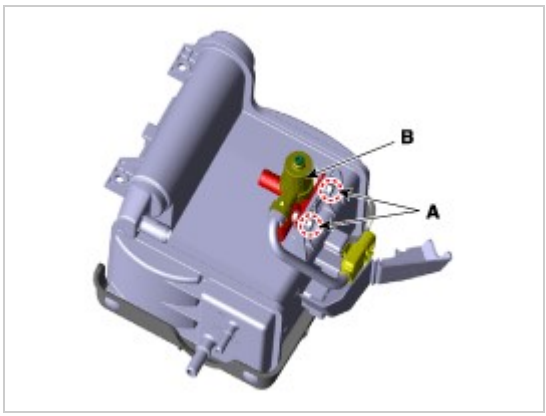

7. Remove the canister protectors (A).

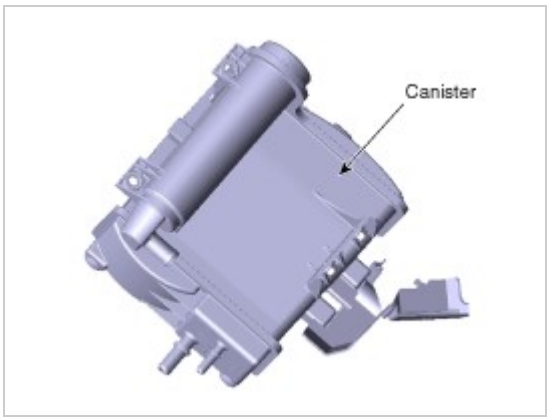

Inspection

1. Check for the following items visually.
   – Cracks or leakage of the canister
   – Loose connection, distortion, or damage of the vapor hose/tube

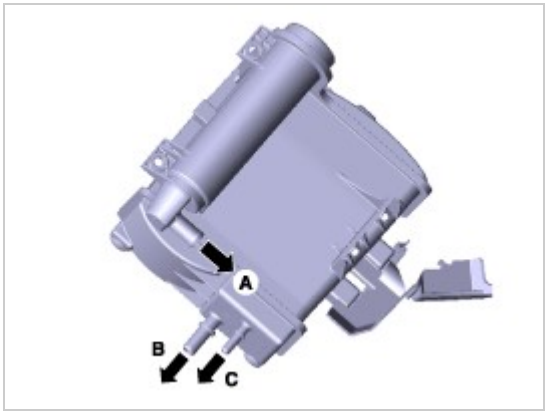

A: Canister ↔ Atmosphere
B: Canister ↔ Intake Manifold
C: Canister ↔ Fuel Tank

Installation

1. Install in the reverse order of removal.

Emission Control System

Replacement

1. Turn ignition switch OFF and disconnect the negative (-) battery cable.
2. Remove the filler-neck assembly.
   (Refer to Engine Control/Fuel System - "Filler-Neck Assembly")
3. Disconnect the vent hose (A).

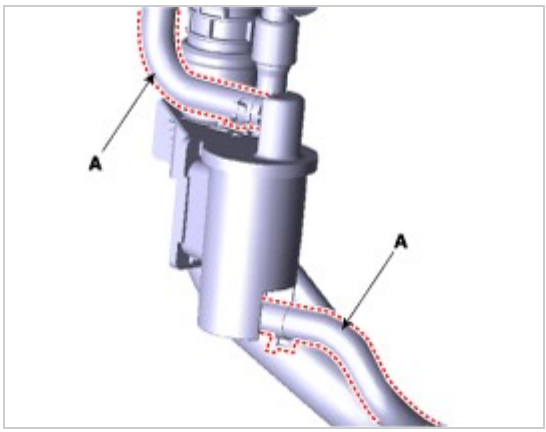

4. Remove the fuel tank air filter (B) after loosening the mounting bolts (A).

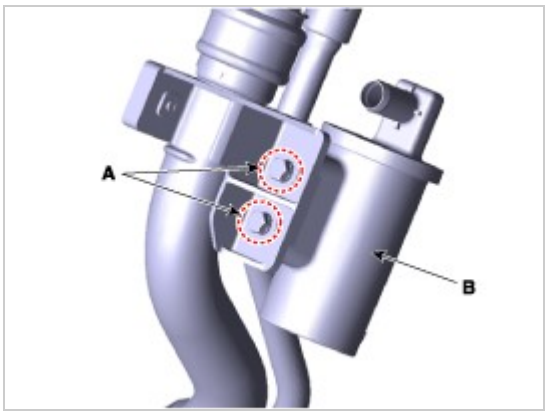

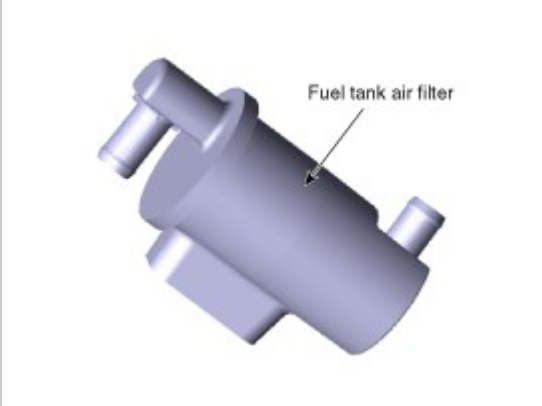

Emission Control System

Description

A ratchet tightening device on the threaded fuel filler cap reduces the chances of incorrect installation, which seals the fuel filler. After the gasket on the fuel filler cap and the filler neck flange contact each other, the ratchet produces a loud clicking noise indicating the seal has been set.

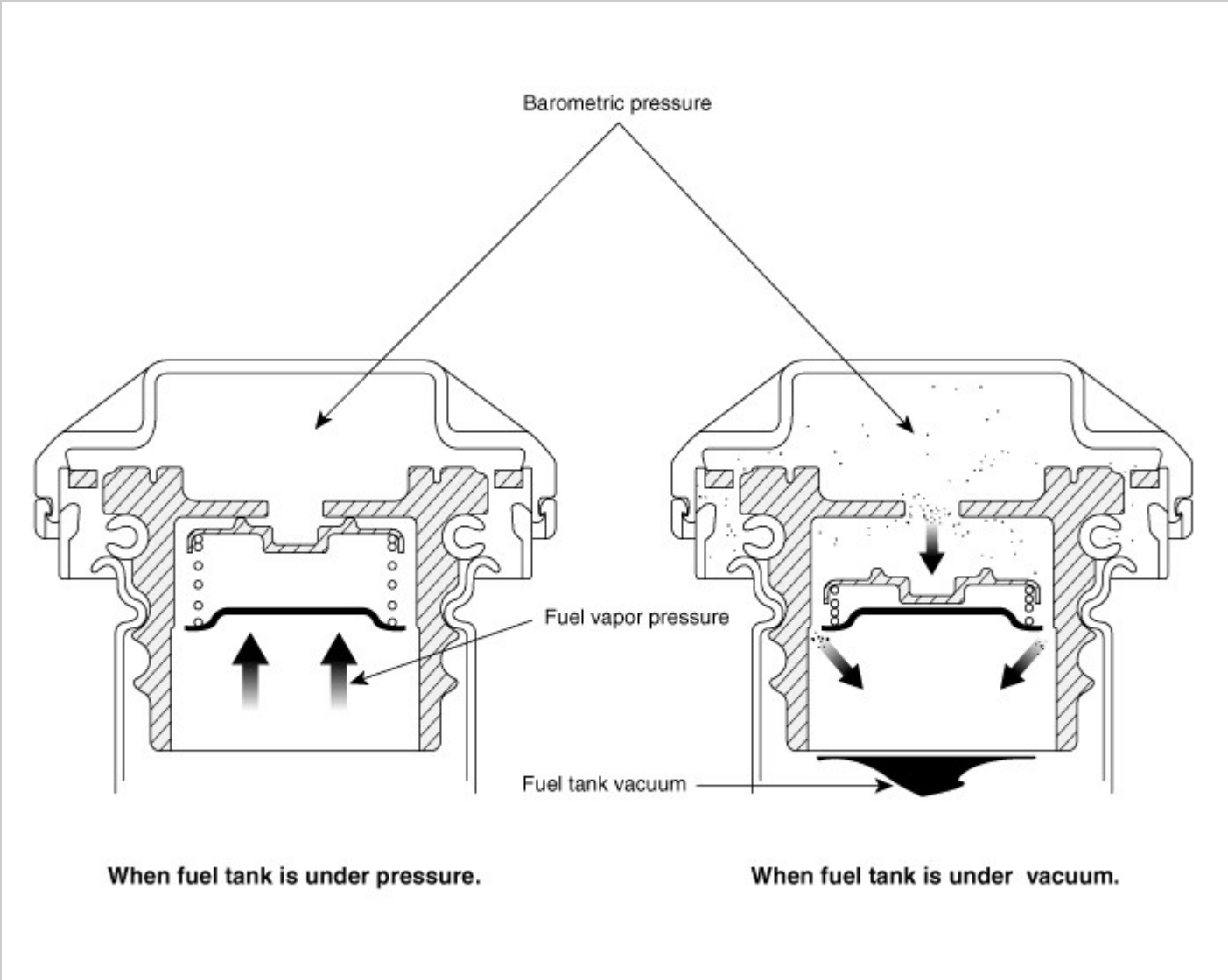

Emission Control System

Description

Exhaust emissions (CO, HC, NOx) are controlled by a combination of engine modifications and the addition of special control components.

Modifications to the combustion chamber, intake manifold, camshaft and ignition system form the basic control system.

These items have been integrated into a highly effective system which controls exhaust emissions while maintaining good drivability and fuel economy.

Air/Fuel Mixture Control System [Multiport Fuel Injection (MFI) System]

The MFI system uses signals from the heated oxygen sensor to activate and control the injector installed in the manifold for each cylinder, thus precisely regulating the air/fuel mixture ratio and reducing emissions.

This in turn allows the engine to produce exhaust gas of the proper composition to permit the use of a three way catalyst. The three way catalyst is designed to convert the three pollutants [hydrocarbons (HC), carbon monoxide (CO), and oxides of nitrogen (NOx)] into harmless substances. There are two operating modes in the MFI system.

1. Open Loop air/fuel ratio is controlled by information pre-programmed into the ECM.
2. Closed Loop air/fuel ratio is constantly adjusted by the ECM based on information supplied by the oxygen sensor.

Emission Control System

Description

The catalytic converter of the gasoline engine is a three way catalyst. It oxidizes carbon monoxide and hydrocarbons (HC), and separates oxygen from the oxides of nitrogen (NOx).

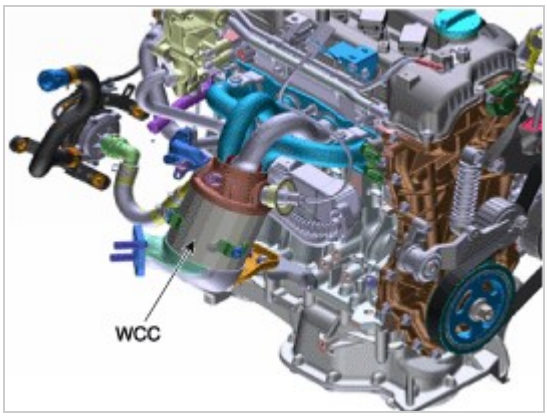

Emission Control System

Description

Continuous Variable Valve Timing (CVVT) system advances or retards the valve timing of the intake and exhaust valve in accordance with the ECM control signal which is calculated by the engine speed and load.

By controlling CVVT, the valve over-lap or under-lap occurs, which makes better fuel economy and reduces exhaust gases (NOx, HC) and improves engine performance through reduction of pumping loss, internal EGR effect, improvement of combustion stability, improvement of volumetric efficiency, and increase of expansion work.

This system consist of

- the CVVT Oil Control Valve (OCV) which supplies the engine oil to the cam phaser or runs out the engine oil from the cam phaser in accordance with the ECM PWM (Pulse With Modulation) control signal,
- the CVVT Oil Temperature Sensor (OTS) which measures the engine oil temperature,
- and the Cam Phaser which varies the cam phase by using the hydraulic force of the engine oil.

The engine oil getting out of the CVVT oil control valve varies the cam phase in the direction (Intake Advance/Exhaust Retard) or opposite direction (Intake Retard/Exhaust Advance) of the engine rotation by rotating the rotor connected with the camshaft inside the cam phaser.

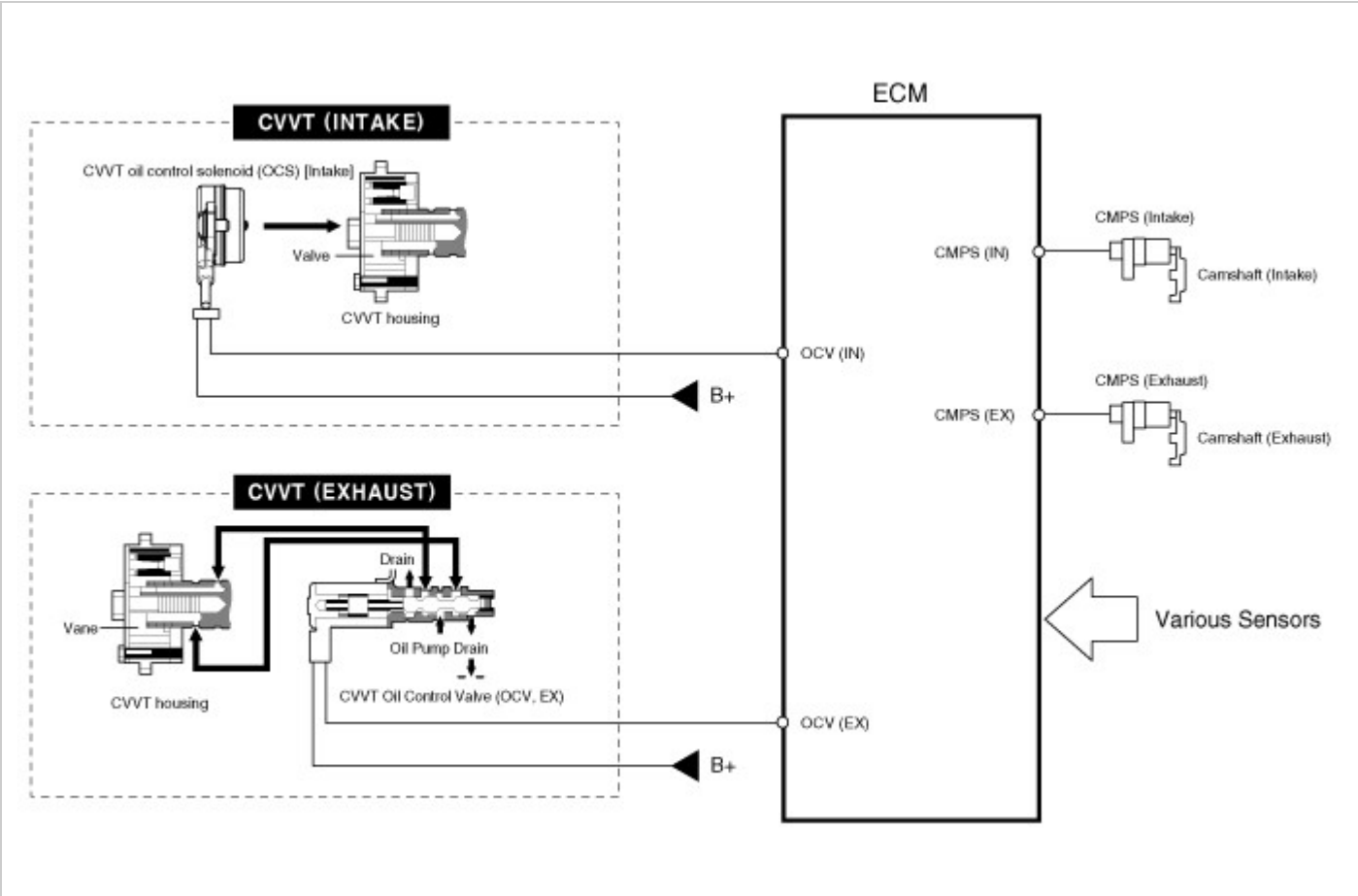

Operation Principle

The CVVT has the mechanism rotating the rotor vane with hydraulic force generated by the engine oil supplied to the advance or retard chamber in accordance with the CVVT oil control valve control.

1. Intake CVVT

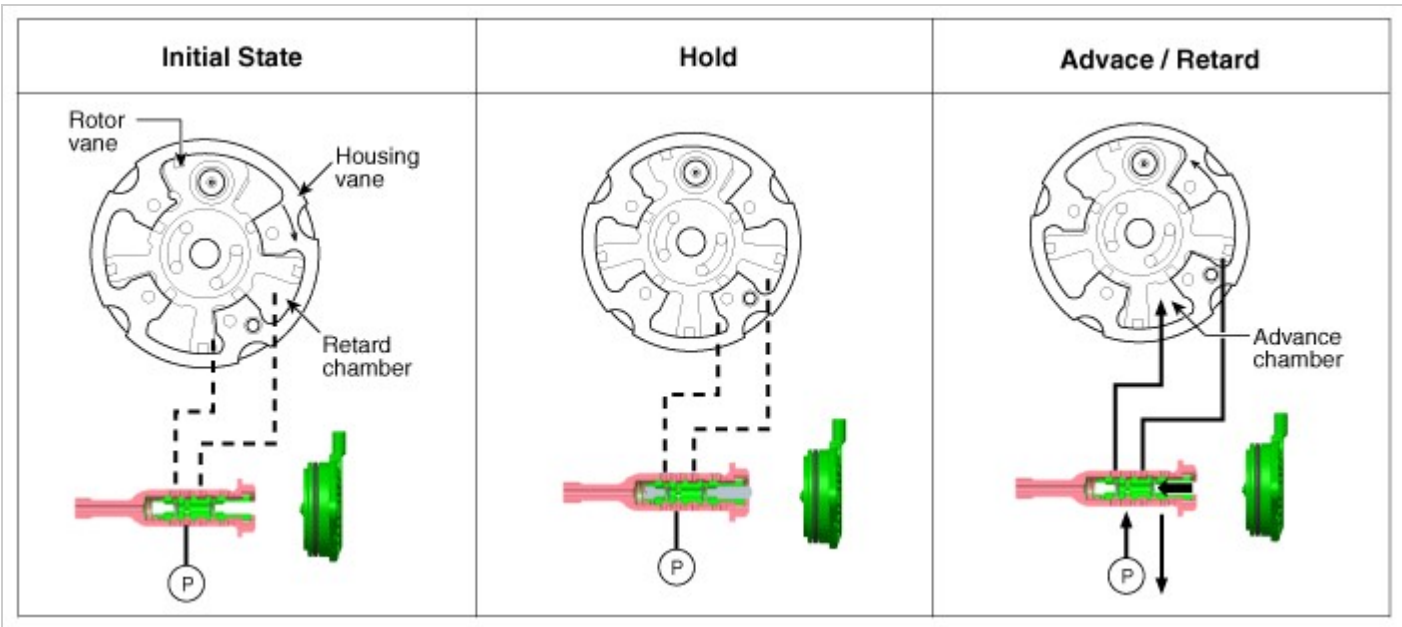

2. Exhaust CVVT

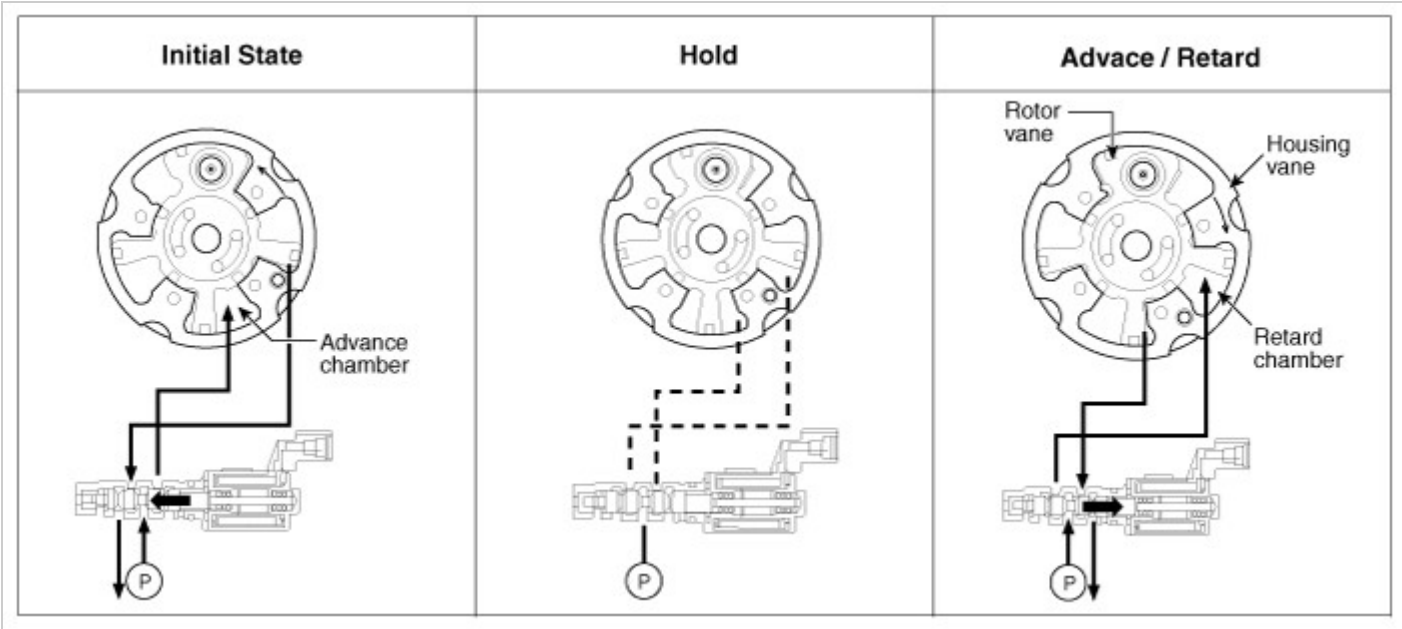

[CVVT System Mode]

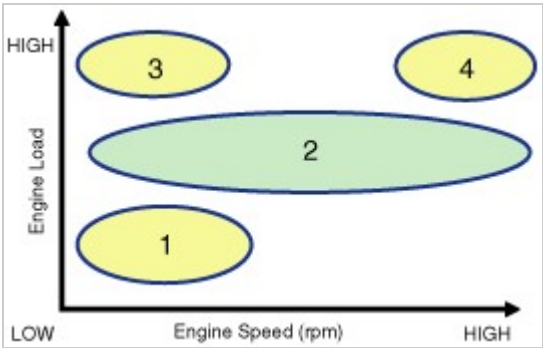

(1) Low Speed / Low Load	(2) Part Load
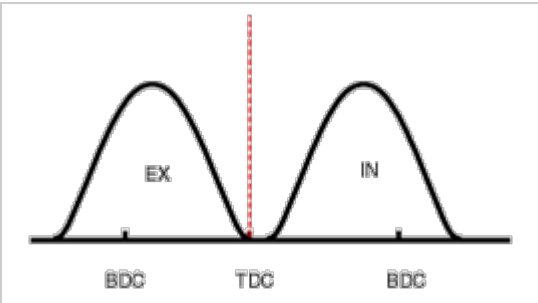	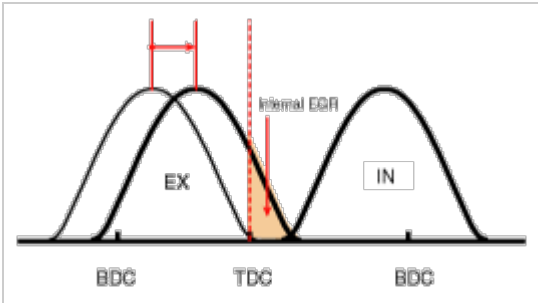
(3) Low Speed / High Load	(4) High Speed / High Load
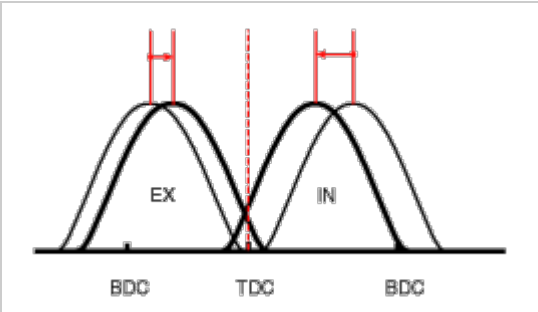	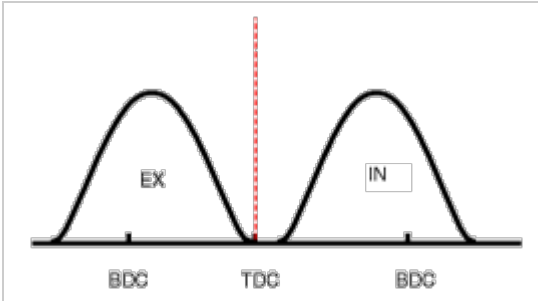

Driving Condition	Exhaust Valve		Intake Valve	
	Valve Timing	Effect	Valve Timing	Effect
(1) Low Speed /Low Load	Completely Advance	* Valve Under-lap * Improvement of combustion stability	Completely Retard	* Valve Under-lap * Improvement of combustion stability
(2) Part Load	Retard	* Increase of expansion work * Reduction of pumping loss * Reduction of HC	Retard	* Reduction of pumping loss

(3) Low Speed /High Load	Retard	* Increase of expansion work	Advance	* Prevention of intake back flow (Improvement of volumetric efficiency)
(4) High Speed /High Load	Advance	* Reduction of pumping loss	Retard	* Improvement of volumetric efficiency