Safety Precaution

Precautions to take before servicing high voltage system

DANGER

- Since hybrid vehicles contain a high voltage battery, if the high voltage system or vehicles are handled incorrectly, this might lead to a serious accidents like electric shock and electric leakage.

WARNING

- Be sure to shut off the high voltage by removing the safety plug before performing inspection or repairing the high voltage system.
  (Refer to "High Voltage Shut-off Procedures")
- The responsible worker keeps the removed safety plug to prevent the plug from being connected by mistake.
- Do not keep any metal objects (watch, ring etc.) while working on the high voltage system, which it can cause serious accidents like electric shock.
- Before beginning work on the high voltage system, the worker should wear personal protective equipment to prevent safety accidents.
  (Refer to "Personal Protective Equipment")
- Never allow workers who are not wear personal protective equipment to touch the high voltage system. High voltage components should be covered with an insulation sheet to prevent safety accidents.
- Use insulation tools when working on the high voltage system.
- Put the removed high voltage components on the insulation mat.

Information

- All the high voltage wiring and connectors are orange.
- A caution label for high voltage is attached to the high voltage components.
- High voltage components :
  High Voltage Battery Pack Assembly, Power Relay Assembly (PRA), BMS ECU, Hybrid Power Control Unit (HPCU), Hybrid Drive Motor, HSG, Electric A/C Compressor, Low DC/DC Converter (LDC), Power Cable, Electric Compressor etc.

CAUTION

- Inform of danger of high voltage by putting the "high voltage caution" on the vehicle as image below.

SAMPLE

DANGER

High Voltage : Do not touch during operation.

Person in charge : _____

Copy this page and put it after folding on the roof of the vehicle in service.

DANGER

High Voltage : Do not touch during operation.

Person in charge : _____

Personal Protective Equipment

Name	Illustration	Description
Insulation glove		Used when inspecting or working on the high voltage components [Insulation performance : 1000V / 300A or above]
Insulation shoes		Used when inspecting or working on the high voltage components

Insulation clothes		Used in the case below • During Removal & installation or inspection of the high voltage battery terminals or wiring, which spark might happen. • During working on the high voltage battery pack assembly.
Insulation helmet	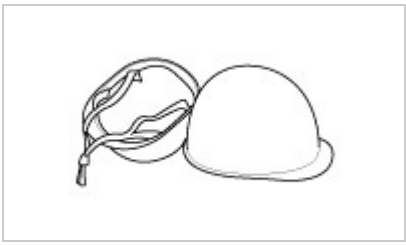	
Safety glasses		
Face shield		
Insulation mat	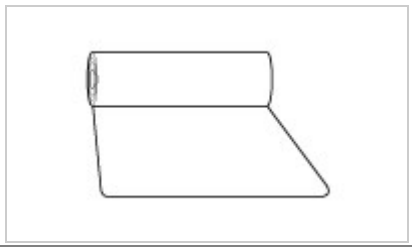	Putting the removed high voltage components on the insulation mat to prevent safety accidents.
Insulation sheet	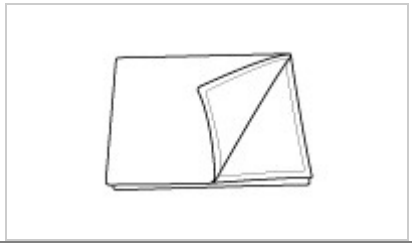	Covering the high voltage components with insulation sheet to prevent people who don’t wear the personal protective equipment from safety accidents.

Precautions to take when handling power cable

- Immediately insulate the high voltage terminal after reconnecting the terminal (use insulation tape).
- Tighten the high voltage terminal screw to spec torque.
- Be careful that (+) and (-) terminals do not come in contact when connecting or disconnecting power cable and busbar.

Precautions to take when handling high voltage battery

- When transporting high voltage battery, be sure to keep it flat and leveled. Failure to do so may decrease the battery performance and/or its life-span.
- High voltage battery"s performance may decrease if it is exposed to high temperature for a lengthy period. As a result, heat-treatment after painting must not exceed 70°C/ 30 minutes, or 80°C/ 20 minutes.

Precautions in case of fire on high voltage battery system

- If the fire occurs indoor, ventilate the area to let out hydrogen gas.
- ACB fire extinguisher is recommended for putting out the fire. (water may also be used).

Precautions in case of high voltage battery gas or electrolyte leakage

-

Turn OFF the Start button. Keep the Smart Key at least 2 meters away from the vehicle to prevent unintended engine start.

- Gas is hydrogen and alkaline vapor. If the leakage is indoor, ventilate the area immediately and evacuate to a safe location.
- If the leaked liquid comes in contact with skin, immediately neutralize the affected area with boric acid solution, then clean with tap water or saline solution.
- If the leaked vapor or liquid gets in the eye, immediately clean the affected eye with water then get medical attention.
- If the gas leakage is caused by high temperature, then do NOT use the battery until the high voltage battery fully cools down to room temperature.

Precautions when handling the vehicle after an accident

- Be sure to wear insulated gloves (or rubber gloves), protective goggles, insulated suite, and insulated boots.
- Do NOT touch bare cable under any condition.
  (Refer to "Precautions when handling power cable")
- In case of vehicle fire, put out the fire with ABC extinguisher. Do NOT use water (usage of large volume of water is okay, but small volume can worsen the situation).
- If more than half of the vehicle is submerged, then do NOT go near the Safety Switch or other high voltage related components. If such a component must be accessed, then move the vehicle to the safe location first before handling the component.
- Gas is hydrogen and alkaline vapor. If the leakage is indoor, ventilate the area immediately and evacuate to a safe location.
- If the leaked liquid comes in contact with skin, immediately neutralize the affected area with boric acid solution, then clean with tap water or saline solution.
- Refer to "High voltage cut-off procedure" if the high voltage needs to be cut off.

Preparations when servicing the accident vehicle

- Be sure to wear insulated gloves (or rubber gloves), protective goggles, insulated suite, and insulated boots.
- Boric Acid Power or Solution
- ABC Extinguisher
- Towel for cleaning electrolyte
- Vinyl tape (for insulating terminal)
- Mega ohm tester (for checking high voltage)

Precautions in case HEV is left unattended for a lengthy period

- Turn OFF the Start button. Keep the Smart Key at least 2 meters away from the vehicle to prevent unintended engine start.
- We recommend that HEV is driven at least 1 time for over 30 minutes every 2 months to protect and manage the high voltage battery (inquire at relevant team in HMC).
- When inspecting or exchanging the auxiliary battery, check high voltage battery SOC reset related problems.

Hybrid Vehicle Refrigerant Recovery / Charging Precautions

- Since the electric compressor uses high-voltage, you should use POE oil which have high Volumetric Resistivity.
- Do not use the same A/C recovery / charging station as conventional belt-driven compressors.

WARNING

- If the POE oil of the system gets mixed with PAG oil, then dielectric breakdown due to decreased volumetric Resistivity can occur and inoperative A/C compressor may result, A/C compressor may not work

High Voltage Shut-off Procedures

WARNING

- Be sure to read and follow the "General Safety Information and Caution" before doing any work related with the high voltage system. Failure to follow the safety instructions may result in serious electrical injuries.
- Be sure to read and follow the "High Voltage Shut-off Procedures" before doing any work related with the high voltage system. Failure to follow the safety instructions may result in serious electrical injuries.

Information

- High voltage components :
  High Voltage Battery Pack Assembly, Power Relay Assembly (PRA), BMS ECU, Hybrid Power Control Unit (HPCU), Hybrid Drive Motor, HSG, Electric A/C Compressor, Low DC/DC Converter (LDC), Power Cable, Electric Compressor etc.

1. Turn the ignition switch OFF and disconnect the auxiliary 12V battery negative (-) terminal.

2. Remove the safety plug cover (A).

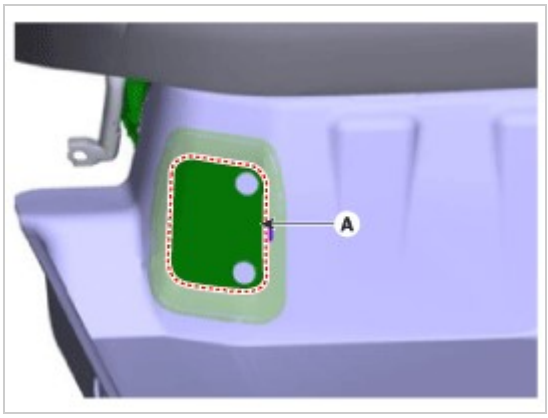

3. Unfasten the hook (A) and then remove the safety plug (C) by pulling the lever (B) to the direction of arrow.

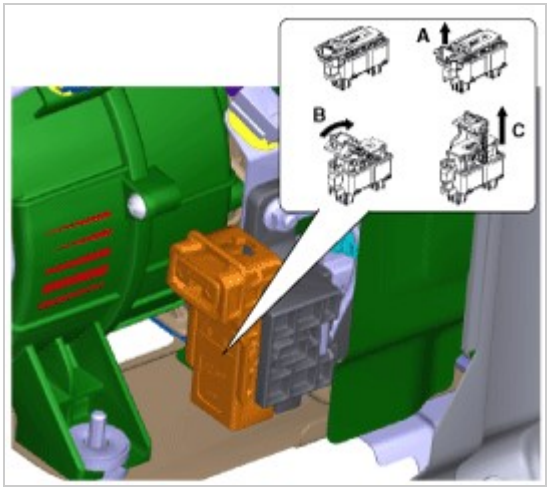

4. Wait for more than 5 minutes so that the capacitor in the high voltage system can be fully discharged.
5. Measure the voltage between the inverter terminals to check that the capacitor in the inverter is discharged completely.
   (1) Remove air cleaner assembly and air duct.
   (Refer to Engine Mechanical System - "Air Cleaner")
   (2) Disconnect the inverter power cable (A).

Information

- Disconnect the inverter power cable as the procedures below.

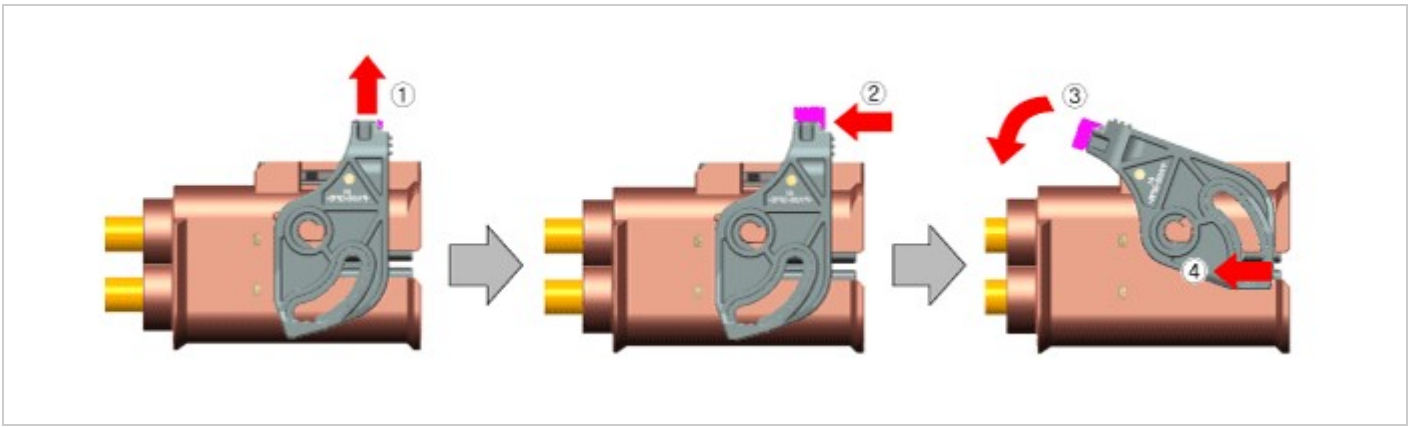

(3) Measure the voltage between the inverter (+) terminal and the inverter (-) terminal.

Less than 30V : High voltage circuit properly shut
More than 30V : Fault on high voltage circuit

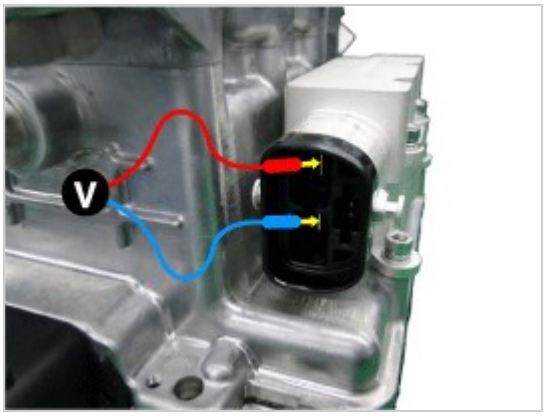

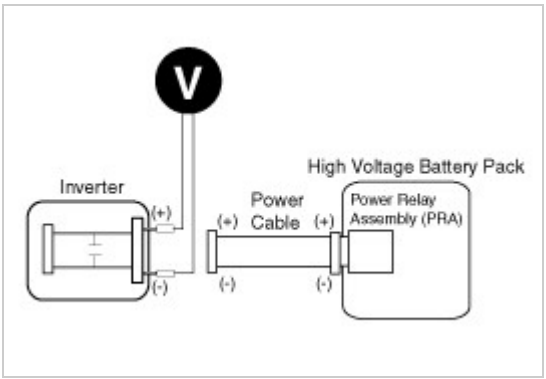

WARNING

- If measured more than 30V, check if the safety plug is removed completely.If measured more than 30V despite the safety plug is removed, there can be serious problems on the high voltage circuit. In this case, check DTC and never touch the high voltage system circuits.

Driveshaft and axle

Specification

Engine	Transaxle	Joint type		Max. permissible angle	
		Outer	Inner	Outer	Inner
HEV Kappa 1.6 GDI	6 A/T	BJ#24	CVTJ#24	46.5°	23°

Tightening torque

Item		N.m	kgf.m	lb-ft
Front	Hub nuts	107.9 - 127.5	11.0 - 13.0	79.6 - 94.0
	Driveshaft caulking nut	274.6 - 294.2	28.0 - 30.0	202.5 - 217.0
	Strut assembly to knuckle	156.9 - 176.5	16.0 - 18.0	115.7 - 130.2
	Front caliper to knuckle	98.1 - 117.7	10.0 - 12.0	72.3 - 86.8
	Wheel speed sensor mounting bolt	7.8 - 11.8	0.8 - 1.2	5.8 - 8.7
	Disc fixing screw	4.9 - 5.9	0.5 - 0.6	3.6 - 4.3
	Lower arm to knuckle	58.8 - 70.6	6.0 - 7.2	43.4 - 52.1
	Tie rod end castle nut	78.5 - 98.1	8.0 - 10.0	57.9 - 72.3
Rear	Wheel nut	107.9 - 127.5	11.0 - 13.0	79.6 - 94.0
	Shock absorber upper mounting bolt	49.0 - 63.7	5.0 - 6.5	36.2 - 47.0
	Shock absorber lower mounting nut	137.3 - 156.9	14.0 - 16.0	101.3 - 115.7
	Brake caliper mounting bolt	63.7 - 73.5	6.5 - 7.5	47.0 - 54.2
	Wheel speed sensor mounting bolt	8.8 - 13.7	0.9 - 1.4	6.5 - 10.1
	Brake disc mounting bolt	4.9 - 5.8	0.5 - 0.6	3.6 - 4.3
	Hub assembly mounting bolt	88.3 - 107.9	9.0 - 11.0	65.1 - 79.6
	Upper arm mounting bolt & nut	137.3 - 156.9	14.0 - 16.0	101.3 - 115.7
	Lower arm mounting bolt & nut	137.3 - 156.9	14.0 - 16.0	101.3 - 115.7
	Assist armt mounting bolt & nut	137.3 - 156.9	14.0 - 16.0	101.3 - 115.7
	Trailing arm mounting bolt	98.1 - 117.7	10.0 - 12.0	72.3 - 86.8

Special Service Tools

Tool (Number and Name)	Illustration	Use
09495-3K000 Band installer		Installation of ear type boot band
09495-39100 Band installer	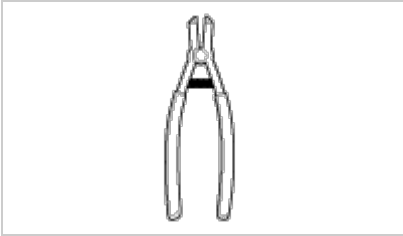	Installation of hook type boot band
09568-1S100 Ball joint puller	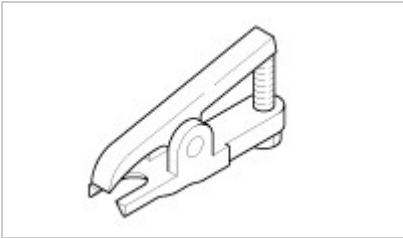	Saperate the ball joint from the front axle
09495-33000 Puller	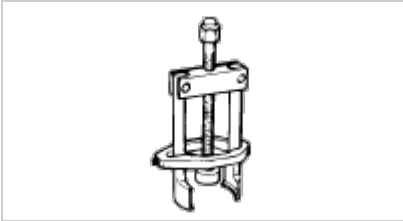	Removal of spider assembly from a drive shaft

Troubleshooting

Trouble Symptom	Probable cause	Remedy
Vehicle pulls to one side	Scoring of driveshaft ball joint	Replace
	Wear, rattle or scoring of wheel bearing	Replace
	Defective front suspension and steering	Adjustment or Replace
Vibartion	Wear, damage or bending of driveshaft	Replace
	Driveshaft rattle and hub serration	Replace
	Wear, rattle or scratching of wheel bearing	Replace
Shimmy	Defective wheel balance	Adjustment or Replace
	Defective front suspension and steering	Adjustment or Replace
Excessive noise	Wear, damage or bending of driveshaft	Replace
	Rattle of driveshaft and worn hub splines	Replace
	Wear, rattle or scoring of wheel bearing	Replace
	Loose hub nut	Adjustment or Replace
	Defective front suspension and steering	Adjustment or Replace

Components

1. Knuckle
2. Dust cover
3. Hub bearing
4. Brake disc

Removal

1. Loosen the wheel nuts slightly.
   Raise the vehicle, and make sure it is securely supported.
2. Remove the front wheel and tire (A) from the front hub.

   Tightening torque :
   107.9 - 127.5 N.m (11.0 - 13.0 kgf.m, 79.6 - 94.0 lb-ft)

NOTICE

- Be careful not to damage the hub bolts when removing the front wheel and tire.

3. Remove the front brake caliper.
   (Refer to Brake System - "Front Disc Brake")

4. Loosen the driveshaft caulking nut (A).

Tightening torque :
274.6 - 294.2 N.m (28.0 - 30.0 kgf.m, 202.5 - 217.1 lb-ft)

NOTICE

- The driveshaft lock nut should be replaced with new ones.
- After installation driveshaft lock nut, stake the lock nut using a chisel and hammer as shown in the illustration below.

Caulking depth :1.5 mm (0.591 in.)

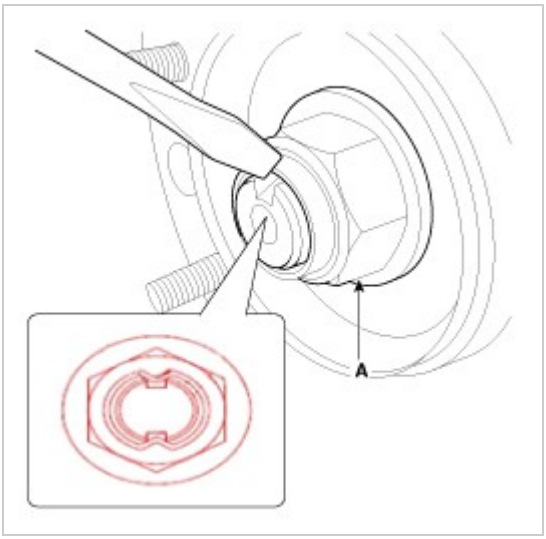

5. Loosen the brake hose mounting bolt and then remove the brake hose bracket.

Tightening torque :
8.8 - 13.7 N.m (0.9 - 1.4 kgf.m, 6.5 - 10.1 lb-ft)

6. Loosen the bolt and then remove the wheel speed sensor (A).

Tightening torque :
7.8 - 11.8 N.m (0.8 - 1.2 kgf.m, 5.8 - 8.7 lb-ft)

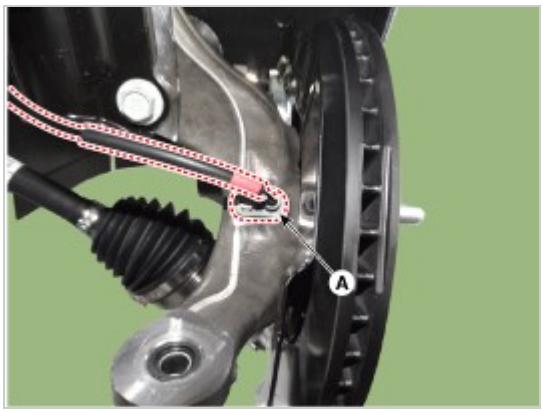

7. Remove the tie rod end ball joint.
   (1) Rmove the split pin (C).
   (2) Loosen the nut (B).
   (3) Using SST(09568-1S100), separate the ball joint (A) from the knuckle.

   Tightening torque :
   78.5 - 98.1 N.m (8.0 - 10.0 kgf.m, 57.9 - 72.3 lb-ft)

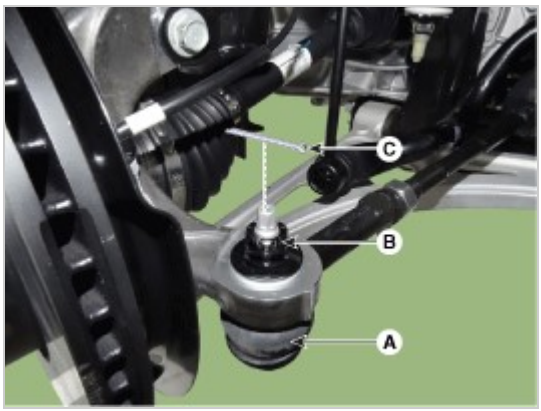

8. Loosen the lower arm nut and then remove the lower arm ball joint by using SST(09568-1S100).
   (1) Rmove the split pin (B).
   (2) Loosen the nut (C) and washer (D).
   (3) Using SST(09568-1S100), separate the ball joint (A) from the knuckle.

   Tightening torque :
   78.5 - 98.1 N.m (8.0 - 10.0 kgf.m, 57.9 - 72.3 lb-ft)

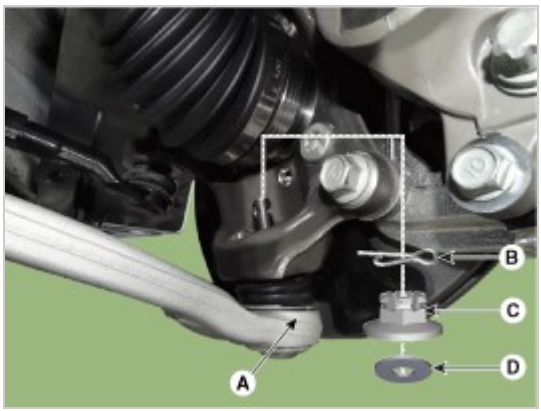

NOTICE

- Do not reuse the lower arm lock nut (C).

9. Loosen the screw and the remove the front disc.

Tightening torque :
4.9 - 5.9 N.m (0.5 - 0.6 kgf.m, 3.6 - 4.3 lb-ft)

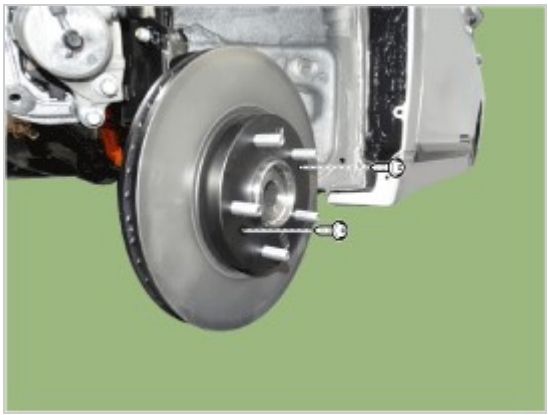

10. Remove the hub bearing by loosening the mounting bolts (A).

Tightening torque :
88.2 - 107.8 N.m (9.0 - 11.0 kgf.m, 65.0 - 79.5 lb-ft)

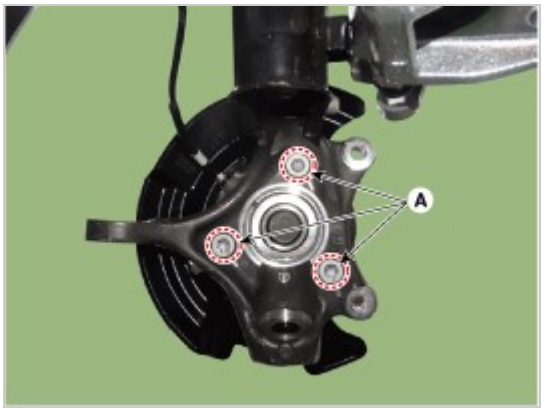

11. Loosen the bolts and then remova the dust cover.

Tightening torque :
6.8 - 10.7 N.m (0.7 - 1.1 kgf.m, 5.0 - 7.9 lb-ft)

12. Loosen the strut mounting bolts & nuts then remove the knuckle assembly (A).

Tightening torque :
156.9 - 176.5 N.m (16.0 - 18.0 kgf.m, 115.7 - 130.2 lb-ft)

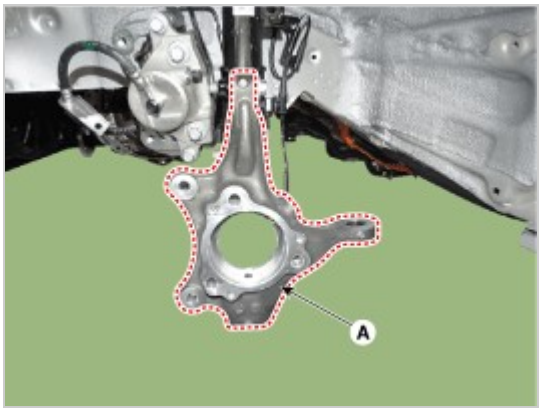

13. To install, reverse the removal procedure

14. Check the alignment.
(Refer to Suspension System - "Alingment")

Inspection

1. Check the hub for cracks and the splines for wear.
2. Check the brake disc for scoring and damage.
3. Check the knuckle for cracks.
4. Check the bearing for cracks or damage.

Driveshaft and axle

Components

1. Driveshaft (LH)
2. Inner shaft bearing bracket
3. Driveshaft (RH)

Driveshaft and axle

Removal

1. Loosen the wheel nuts slightly.
Raise the vehicle, and make sure it is securely supported.
2. Remove the front wheel and tire (A) from the front hub.

Tightening torque :
107.9 - 127.5 N.m (11.0 - 13.0 kgf.m, 79.6 - 94.0 lb-ft)

NOTICE

- Be careful not to damage the hub bolts when removing the front wheel and tire.

3. Loosen the driveshaft caulking nut (A).

Tightening torque :
274.6 - 294.2 N.m (28.0 - 30.0 kgf.m, 202.5 - 217.1 lb-ft)

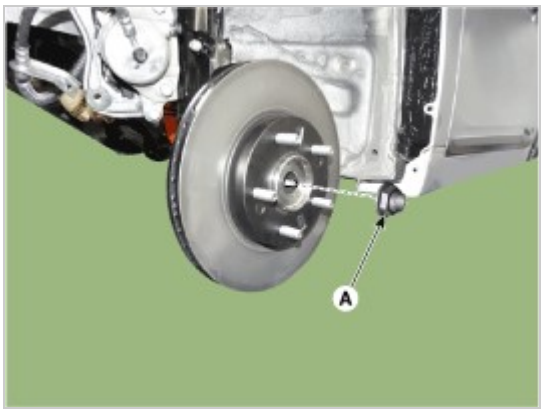

NOTICE

- The driveshaft lock nut should be replaced with new ones.
- After installation driveshaft lock nut, stake the lock nut using a chisel and hammer as shown in the illustration below.

Caulking depth :1.5 mm (0.591 in.)

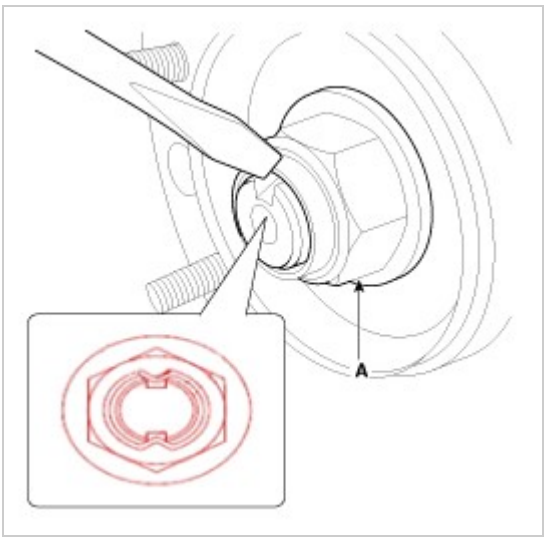

4. Remove the tie rod end ball joint.
   (1) Rmove the split pin (C).
   (2) Loosen the nut (B).
   (3) Using SST(09568-1S100), separate the ball joint (A) from the knuckle.

Tightening torque :
78.5 - 98.1 N.m (8.0 - 10.0 kgf.m, 57.9 - 72.3 lb-ft)

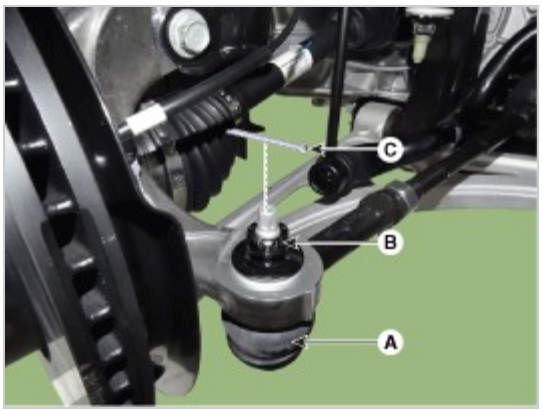

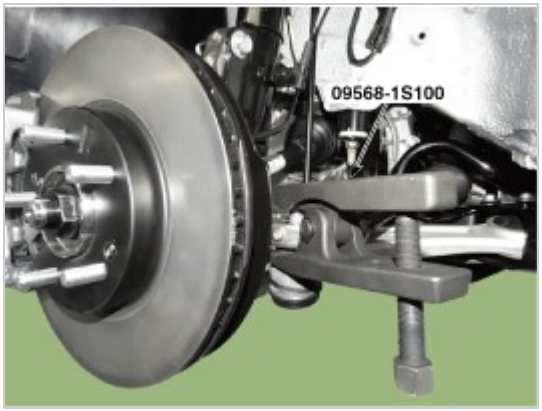

5. Loosen the lower arm nut and then remove the lower arm ball joint by using SST(09568-1S100).
   (1) Rmove the split pin (B).
   (2) Loosen the nut (C) and washer (D).
   (3) Using SST(09568-1S100), separate the ball joint (A) from the knuckle.

   Tightening torque :
   78.5 - 98.1 N.m (8.0 - 10.0 kgf.m, 57.9 - 72.3 lb-ft)

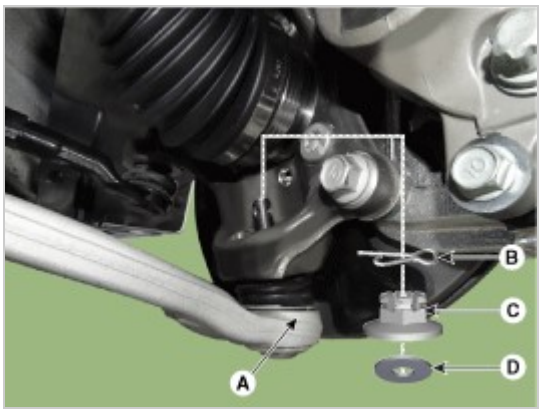

NOTICE

- Do not reuse the lower arm lock nut (A).

6. Using a plastic hammer (A), remove the front driveshaft (B) from the knuckle assembly (C).

7. Loosen the inner shaft mounting bolts and then remove the driveshaft RH.

   Tightening torque :
   49.0 - 63.7 N.m (5.0 - 6.5 kgf.m, 36.2 - 47.0 lb-ft)

8. Insert a pry bar between the transaxle case and joint case, and separate the driveshaft.

NOTICE

- Use a pry bar being careful not to damage the transaxle and joint.

- Do not insert the pry bar too deep, as this may cause damage to the oil seal.
- Do not pull the driveshaft by excessive force it may cause components inside the joint kit to dislodge resulting in a torn boot or a damaged bearing.
- Plug the hole of the transaxle case with the oil seal cap to prevent contamination.
- Support the driveshaft properly.
- Replace the retainer ring whenever the driveshaft is removed from the transaxle case.

9. To install, reverse the removal procedure.
10. Check the front alignment.
    (Refer to Suspension System - "Front Alignment")

Driveshaft and axle

Components

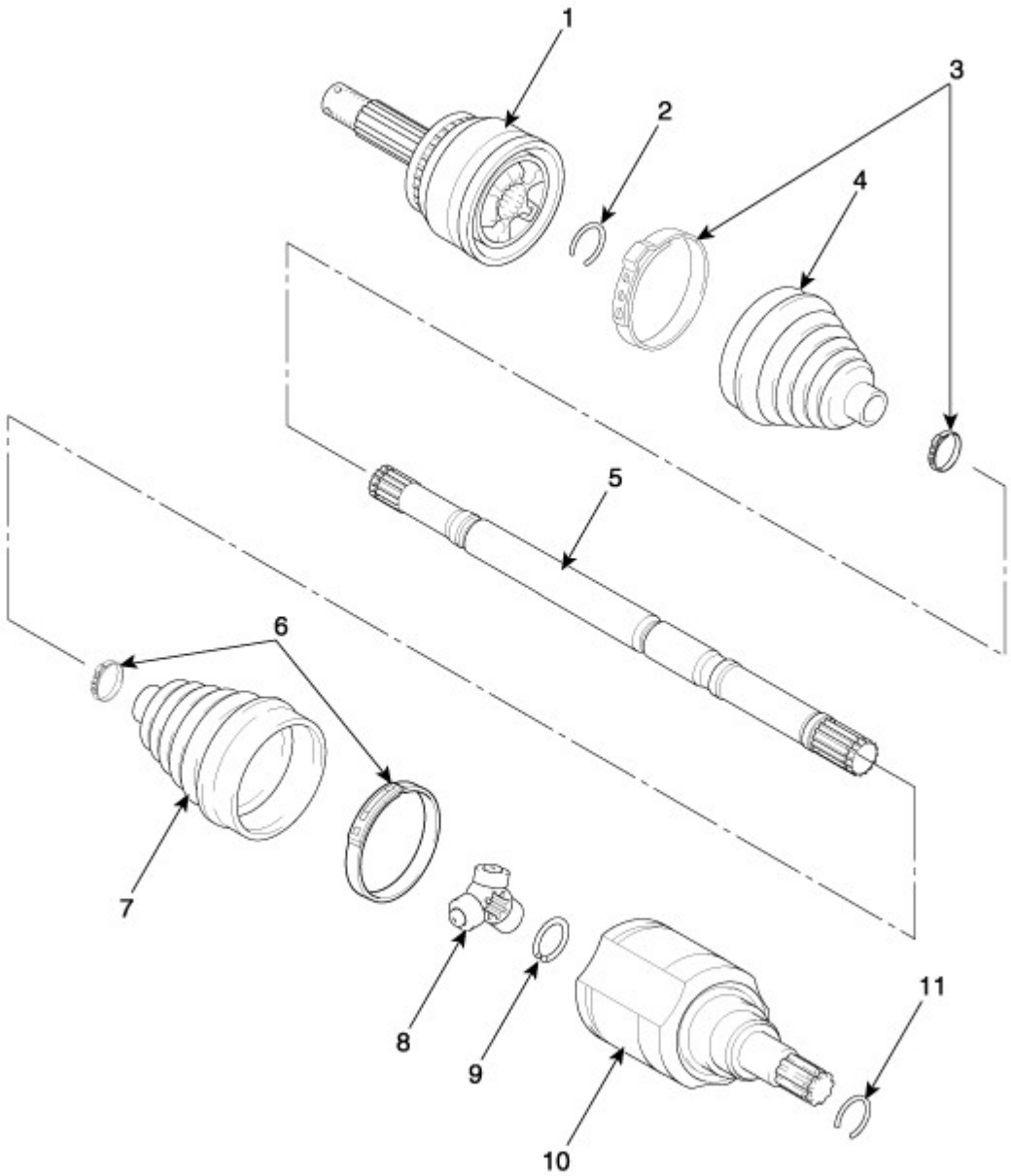

1. BJ assembly
2. Circlip
3. BJ boot band
4. BJ boot
5. Shaft
6. TJ boot band
7. TJ boot
8. Spider assembly
9. Snap ring
10. TJ Housing
11. Circlip

Driveshaft and axle

Disassembly

NOTICE

- Special grease must be applied to the driveshaft joint. Do not substitute with another type of grease.
- The boot band should be replaced with a new one.

1. Remove the Front Driveshaft.
   (Refer to Driveshaft Assembly - "Front Driveshaft")
2. Remove the housing circlip (B) from the driveshaft spline (A).

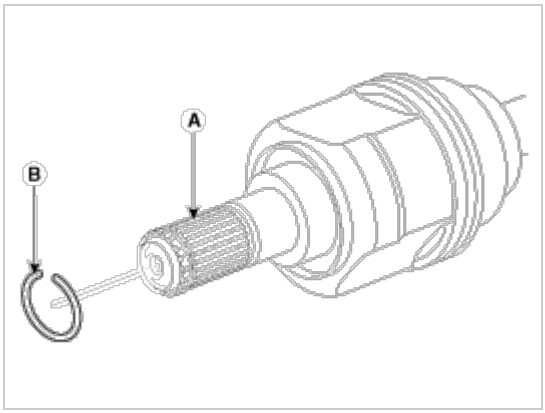

3. Remove both boot bands from the TJ housing.

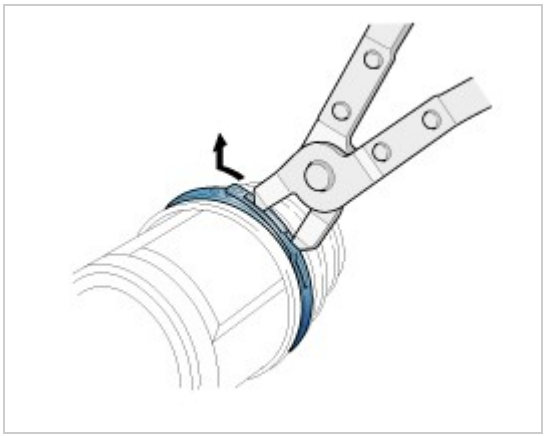

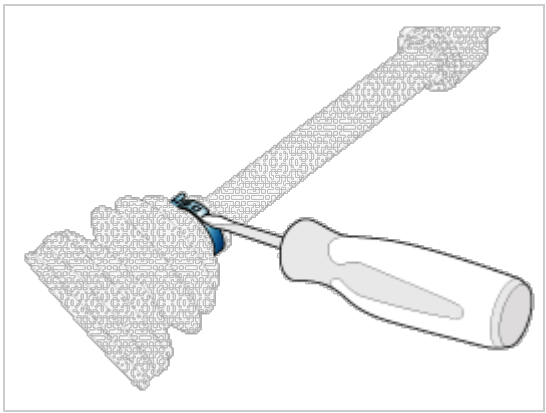

4. Remove the TJ housing (A).

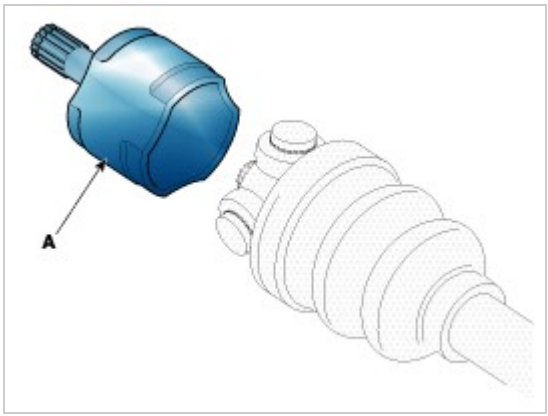

NOTICE

- Make alignment marks on spider roller assembly (A), TJ housing (B), and shaft spline (C) to aid reassembly.

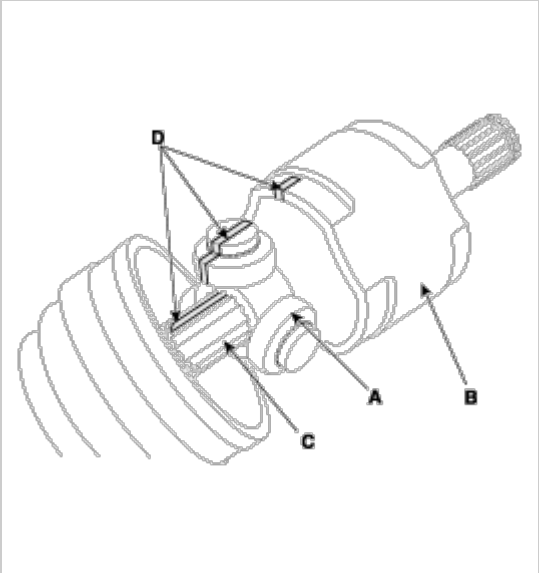

5. Remove the snap ring (A) from the shaft.

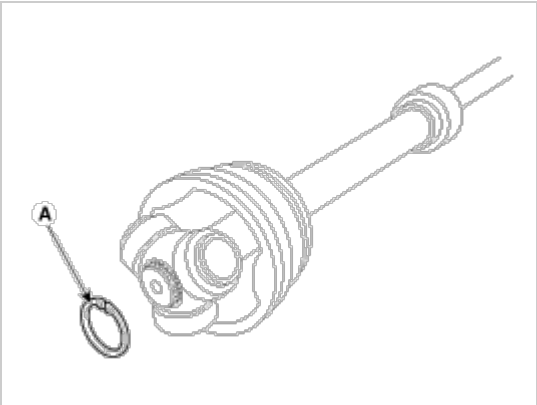

6. Remove the spider assembly (B) from the driveshaft (A) using the special tool SST (09495-33000).

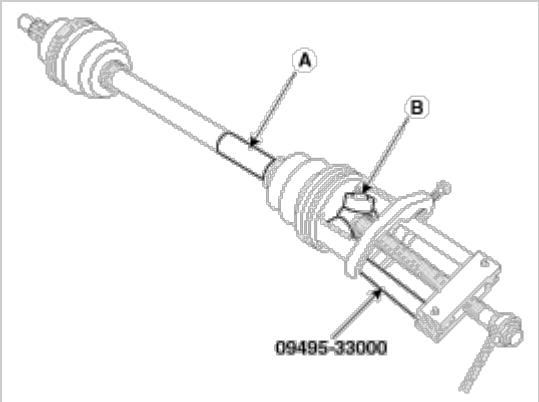

7. Clean the spider assembly.
8. Remove the TJ boot (A).

NOTICE

- For reusing the boot (A), wrap tape (B) around the driveshaft splines (C) to protect the boot (A).

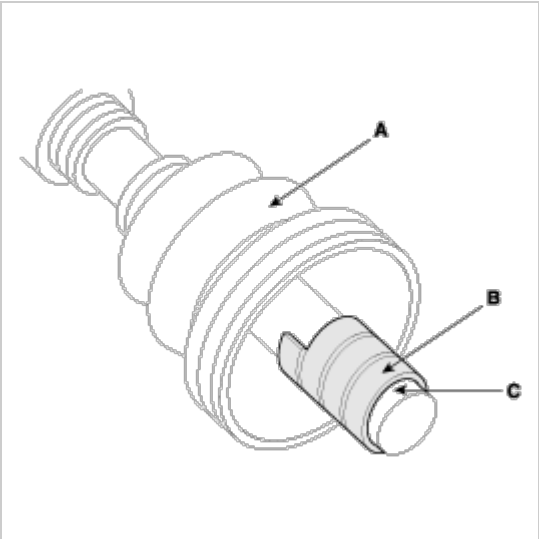

Inspection

1. Check the driveshaft boots for damage and deterioration.
2. Check the driveshaft spline for wear or damage.
3. Check that there is no water or foreign material in the joint.
4. Check the spider assembly for roller rotation, wear or corrosion.
5. Check the groove inside the joint case for wear or corrosion.
6. Check the dynamic damper for damage or cracks.

Reassembly

1. Wrap tape around the driveshaft spline(TJ) to prevent damage to the boot.
2. Using the alignment marks (D) made during disassembly as a guide, install the spider assembly (A) and snap ring (B) on the driveshaft splines (C).

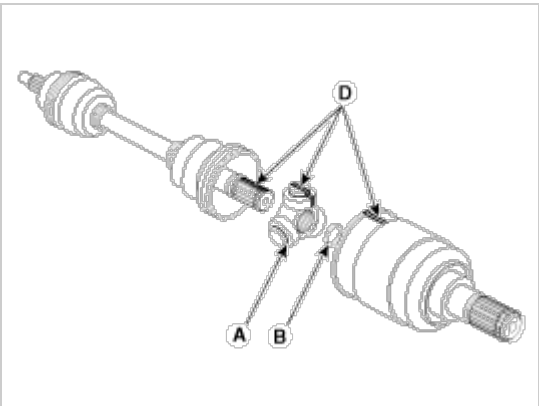

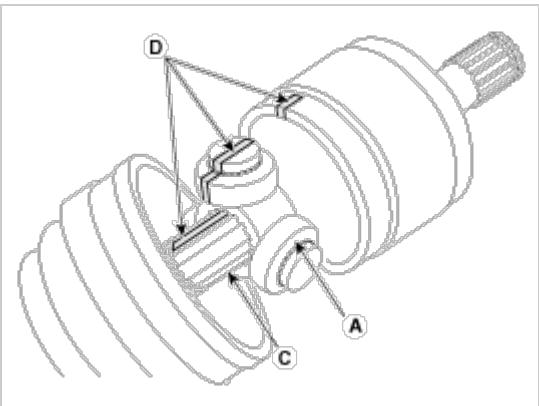

3. Add specified grease to the joint boot as much as it was wiped away at inspection.
4. Install the both boot band.
5. Using the SST secure the TJ boot bands.

[Hook type]

[Ear type]

NOTICE

- Do not reuse the boot band.

6. Install the front driveshaft.
   (Refer to Driveshaft Assembly - "Front Driveshaft")
7. Check the front alignment.
   (Refer to Suspension System - "Front Alignment")

Driveshaft and axle

Components

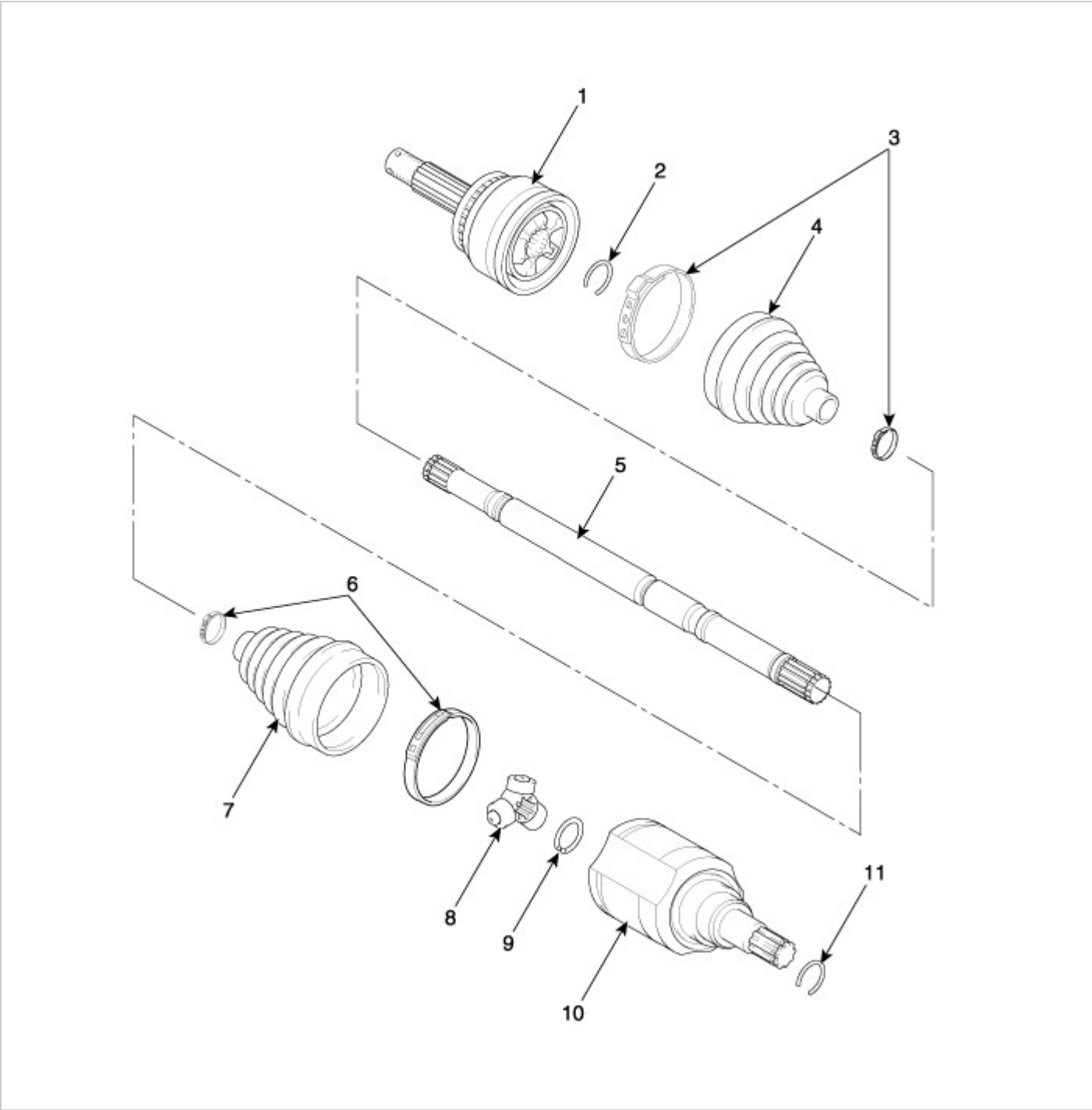

1. BJ assembly
2. Circlip
3. BJ boot band
4. BJ boot
5. Shaft
6. TJ boot band
7. TJ boot
8. Spider assembly
9. Snap ring
10. TJ Case
11. Clip

Driveshaft and axle

Replacement

1. Remove the front driveshaft.
   (Refer to Driveshaft Assembly - "Front Driveshaft")
2. Remove the TJ joint assembly.
   (Refer to Driveshaft Assembly - "TJ Joint")
3. Using a plier or flat-tipped (-) screwdriver, remove the BJ boot bands (A).

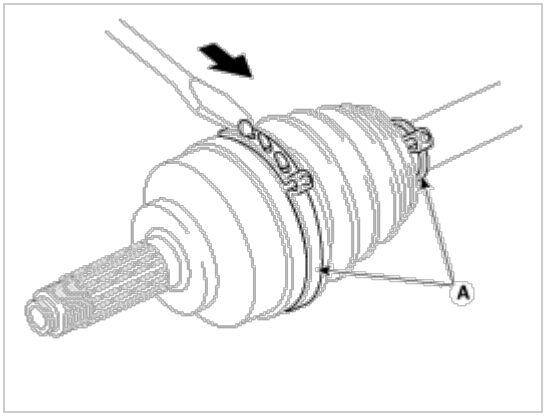

4. Using the SST, secure the BJ boot bands.

[Hook type]

[Ear type]

NOTICE

- Do not disassemble the BJ assembly.
- Special grease must be applied to the driveshaft joint. Do not substitute with another type of grease.
- The boot band should be replaced with a new one.

5. Install the TJ joint assembly.
   (Refer to Driveshaft Assembly - "TJ joint")
6. Install the front driveshaft.
   (Refer to Driveshaft Assembly - "Front Driveshaft")
7. Check the front alignment.
   (Refer to Suspension System - "Front Alignment")

Driveshaft and axle

Components

1. Rear axle
2. Dust cover
3. Rear hub bearing
4. Rear brake disc

Removal

1. Loosen the wheel nuts slightly.
   Raise the vehicle, and make sure it is securely supported.
2. Remove the rear wheel and tire (A) from the rear hub.

   Tightening torque :
   107.9 - 127.5 N.m (11.0 - 13.0 kgf.m, 79.6 - 94.0 lb-ft)

NOTICE

- Be careful not to damage the hub bolts when removing the rear wheel and tire (A).

3. Remove the rear brake caliper.
   (Refer to Brake System - "Rear Disc Brake")
4. Loosen the screws and then remove the brake disc.

   Tightening torque :
   4.9 - 5.9 N.m (0.5 - 0.6 kgf.m, 3.6 - 4.3 lb-ft)

5. Disconnect the rear wheel speed sensor connector (A).

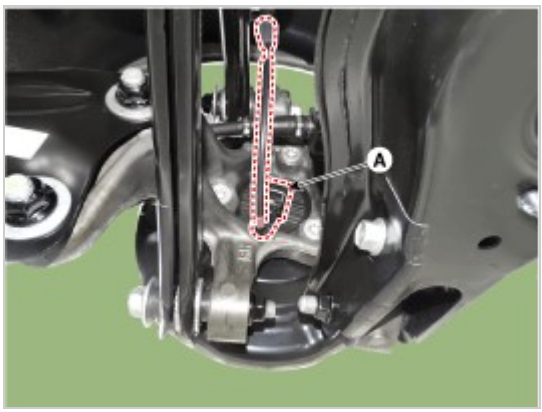

6. Loosen the mounting bolts (A) and then remove the hub bearing.

   Tightening torque :
   88.2 - 107.8 N.m (9.0 - 11.0 kgf.m, 65.0 - 79.5 lb-ft)

7. Loosen the bolts and then remova the dust cover.

Tightening torque :
6.8 - 10.7 N.m (0.7 - 1.1 kgf.m, 5.0 - 7.9 lb-ft)

8. Loosen the rear upper arm mounting bolt and then remove the rear upper arm (A).

Tightening torque :
137.3 - 156.9 N.m (14.0 - 16.0 kgf.m, 101.3 - 115.7 lb-ft)

> **NOTICE**
> • Set up the transmission jack under the lower arm in order to remove the upper arm in no-load condition .

9. Loosen the trailing arm mounting nuts (A), and then remove the trailing arm.

Tightening torque :
137.3 - 156.9 N.m (14.0 - 16.0 kgf.m, 101.3 - 115.7 lb-ft)

10. Loosen the bolt and nut and then remove the lower arm (A), assist arm (B).

Tightening torque :
A : 137.3 - 156.9 N.m (14.0 - 16.0 kgf.m, 101.3 - 115.7 lb-ft)
B : 88.2 - 107.8 N.m (9.0 - 11.0 kgf.m, 65.0 - 79.5 lb-ft)

11. To install, reverse the removal procedure.
12. Check the wheel Alignment.
    (Refer to Tires/Wheels - "Alignment")

Inspection

1. Check the hub for cracks and the splines for wear.
2. Check the brake disc for scoring and damage.
3. Check the rear axle carrier for cracks.
4. Check the bearing for cracks or damage.