Safety Precaution

Precautions to take before servicing high voltage system

DANGER

- Since hybrid vehicles contain a high voltage battery, if the high voltage system or vehicles are handled incorrectly, this might lead to a serious accidents like electric shock and electric leakage.

WARNING

- Be sure to shut off the high voltage by removing the safety plug before performing inspection or repairing the high voltage system.
  (Refer to "High Voltage Shut-off Procedures")
- The responsible worker keeps the removed safety plug to prevent the plug from being connected by mistake.
- Do not keep any metal objects (watch, ring etc.) while working on the high voltage system, which it can cause serious accidents like electric shock.
- Before beginning work on the high voltage system, the worker should wear personal protective equipment to prevent safety accidents.
  (Refer to "Personal Protective Equipment")
- Never allow workers who are not wear personal protective equipment to touch the high voltage system. High voltage components should be covered with an insulation sheet to prevent safety accidents.
- Use insulation tools when working on the high voltage system.
- Put the removed high voltage components on the insulation mat.

Information

- All the high voltage wiring and connectors are orange.
- A caution label for high voltage is attached to the high voltage components.
- High voltage components :
  High Voltage Battery Pack Assembly, Power Relay Assembly (PRA), BMS ECU, Hybrid Power Control Unit (HPCU), Hybrid Drive Motor, HSG, Electric A/C Compressor, Low DC/DC Converter (LDC), Power Cable, Electric Compressor etc.

CAUTION

- Inform of danger of high voltage by putting the "high voltage caution" on the vehicle as image below.

SAMPLE

DANGER

High Voltage : Do not touch during operation.

Person in charge : _____

Copy this page and put it after folding on the roof of the vehicle in service.

DANGER

High Voltage : Do not touch during operation.

Person in charge : _____

Personal Protective Equipment

Name	Illustration	Description
Insulation glove		Used when inspecting or working on the high voltage components [Insulation performance : 1000V / 300A or above]
Insulation shoes		Used when inspecting or working on the high voltage components

Insulation clothes		Used in the case below • During Removal & installation or inspection of the high voltage battery terminals or wiring, which spark might happen. • During working on the high voltage battery pack assembly.
Insulation helmet	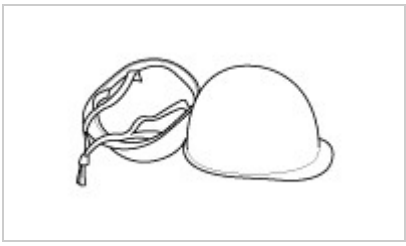	
Safety glasses		
Face shield		
Insulation mat	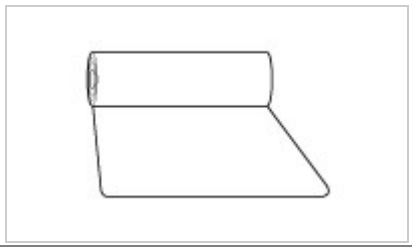	Putting the removed high voltage components on the insulation mat to prevent safety accidents.
Insulation sheet	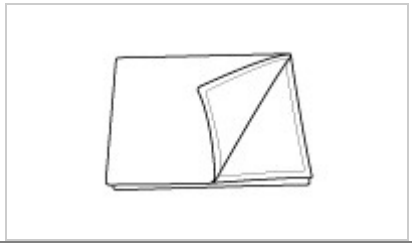	Covering the high voltage components with insulation sheet to prevent people who don’t wear the personal protective equipment from safety accidents.

Precautions to take when handling power cable

- Immediately insulate the high voltage terminal after reconnecting the terminal (use insulation tape).
- Tighten the high voltage terminal screw to spec torque.
- Be careful that (+) and (-) terminals do not come in contact when connecting or disconnecting power cable and busbar.

Precautions to take when handling high voltage battery

- When transporting high voltage battery, be sure to keep it flat and leveled. Failure to do so may decrease the battery performance and/or its life-span.
- High voltage battery"s performance may decrease if it is exposed to high temperature for a lengthy period. As a result, heat-treatment after painting must not exceed 70°C/ 30 minutes, or 80°C/ 20 minutes.

Precautions in case of fire on high voltage battery system

- If the fire occurs indoor, ventilate the area to let out hydrogen gas.
- ACB fire extinguisher is recommended for putting out the fire. (water may also be used).

Precautions in case of high voltage battery gas or electrolyte leakage

-

Turn OFF the Start button. Keep the Smart Key at least 2 meters away from the vehicle to prevent unintended engine start.

- Gas is hydrogen and alkaline vapor. If the leakage is indoor, ventilate the area immediately and evacuate to a safe location.
- If the leaked liquid comes in contact with skin, immediately neutralize the affected area with boric acid solution, then clean with tap water or saline solution.
- If the leaked vapor or liquid gets in the eye, immediately clean the affected eye with water then get medical attention.
- If the gas leakage is caused by high temperature, then do NOT use the battery until the high voltage battery fully cools down to room temperature.

Precautions when handling the vehicle after an accident

- Be sure to wear insulated gloves (or rubber gloves), protective goggles, insulated suite, and insulated boots.
- Do NOT touch bare cable under any condition.
  (Refer to "Precautions when handling power cable")
- In case of vehicle fire, put out the fire with ABC extinguisher. Do NOT use water (usage of large volume of water is okay, but small volume can worsen the situation).
- If more than half of the vehicle is submerged, then do NOT go near the Safety Switch or other high voltage related components. If such a component must be accessed, then move the vehicle to the safe location first before handling the component.
- Gas is hydrogen and alkaline vapor. If the leakage is indoor, ventilate the area immediately and evacuate to a safe location.
- If the leaked liquid comes in contact with skin, immediately neutralize the affected area with boric acid solution, then clean with tap water or saline solution.
- Refer to "High voltage cut-off procedure" if the high voltage needs to be cut off.

Preparations when servicing the accident vehicle

- Be sure to wear insulated gloves (or rubber gloves), protective goggles, insulated suite, and insulated boots.
- Boric Acid Power or Solution
- ABC Extinguisher
- Towel for cleaning electrolyte
- Vinyl tape (for insulating terminal)
- Mega ohm tester (for checking high voltage)

Precautions in case HEV is left unattended for a lengthy period

- Turn OFF the Start button. Keep the Smart Key at least 2 meters away from the vehicle to prevent unintended engine start.
- We recommend that HEV is driven at least 1 time for over 30 minutes every 2 months to protect and manage the high voltage battery (inquire at relevant team in HMC).
- When inspecting or exchanging the auxiliary battery, check high voltage battery SOC reset related problems.

Hybrid Vehicle Refrigerant Recovery / Charging Precautions

- Since the electric compressor uses high-voltage, you should use POE oil which have high Volumetric Resistivity.
- Do not use the same A/C recovery / charging station as conventional belt-driven compressors.

WARNING

- If the POE oil of the system gets mixed with PAG oil, then dielectric breakdown due to decreased volumetric Resistivity can occur and inoperative A/C compressor may result, A/C compressor may not work

High Voltage Shut-off Procedures

WARNING

- Be sure to read and follow the "General Safety Information and Caution" before doing any work related with the high voltage system. Failure to follow the safety instructions may result in serious electrical injuries.
- Be sure to read and follow the "High Voltage Shut-off Procedures" before doing any work related with the high voltage system. Failure to follow the safety instructions may result in serious electrical injuries.

Information

- High voltage components :
  High Voltage Battery Pack Assembly, Power Relay Assembly (PRA), BMS ECU, Hybrid Power Control Unit (HPCU), Hybrid Drive Motor, HSG, Electric A/C Compressor, Low DC/DC Converter (LDC), Power Cable, Electric Compressor etc.

1. Turn the ignition switch OFF and disconnect the auxiliary 12V battery negative (-) terminal.

2. Remove the safety plug cover (A).

3. Unfasten the hook (A) and then remove the safety plug (C) by pulling the lever (B) to the direction of arrow.

4. Wait for more than 5 minutes so that the capacitor in the high voltage system can be fully discharged.

5. Measure the voltage between the inverter terminals to check that the capacitor in the inverter is discharged completely.
   (1) Remove air cleaner assembly and air duct.
   (Refer to Engine Mechanical System - "Air Cleaner")

   (2) Disconnect the inverter power cable (A).

Information

- Disconnect the inverter power cable as the procedures below.

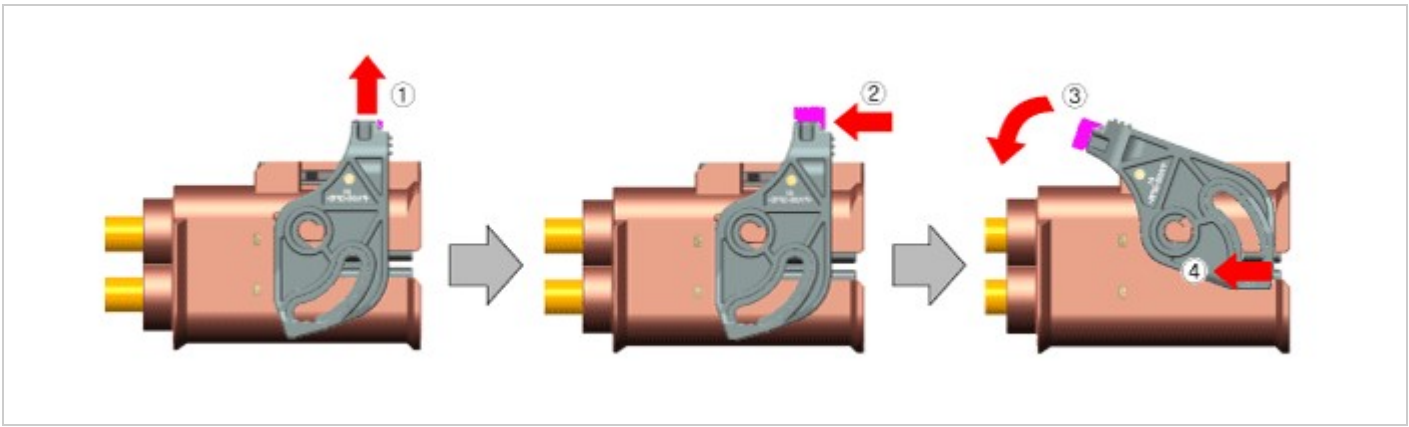

(3) Measure the voltage between the inverter (+) terminal and the inverter (-) terminal.

Less than 30V : High voltage circuit properly shut
More than 30V : Fault on high voltage circuit

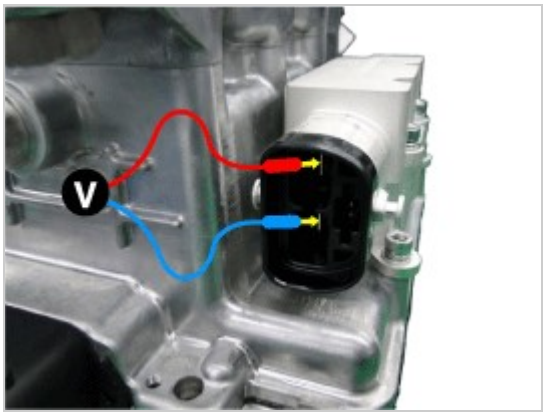

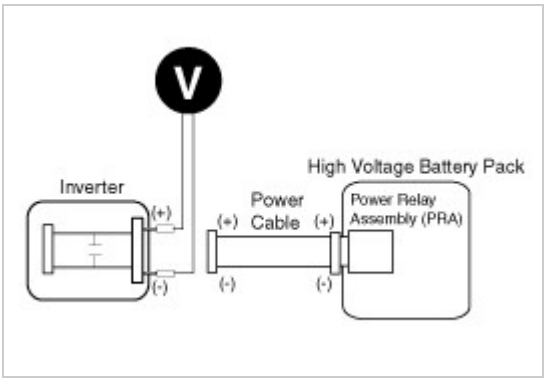

WARNING

- If measured more than 30V, check if the safety plug is removed completely.If measured more than 30V despite the safety plug is removed, there can be serious problems on the high voltage circuit. In this case, check DTC and never touch the high voltage system circuits.

Specifications

Hybrid motor

Drive motor

Category	Drive motor
Type	Permanent magnet synchronous motor (Interior Permanent Magnet Synchronous Motor)
Maximum output	32kW (driving), 35kW (regeneration)
Maximum torque	170 N.m
Maximum speed	6000 rpm
Cooling system	Water - cooled

HSG(Hybrid starter Generator)

Category		Specifications
Type		Permanent magnet synchronous motor (Interior Permanent Magnet Synchronous Motor)
Driving	Torque (N.m / rpm / sec)	35.3 / 0 - 2160 / 5
	Output (kW / rpm / sec)	8.0 / 1260 - 12000 / 5
Generative	Torque (N.m / rpm / Min)	21.4 / 0 - 3250 / 20
	Output (kW / rpm / Min)	7.3 / 3250 - 15000 / 20
Maximum speed (rpm)		18000
Cooling system		Water - cooled

Cooling system

Coolant	Specified coolant	LLC - 10
	Quantity	Approx. 3.2L (0.85 US gal, 3.38 US qt, 2.82 Imp qt.)

Tightening Torque

Category	Tightening torque (kgf.m)		
	N.m	kgf.m	lb-ft
Concentric sleeve cylinder mounting bolt	9.8 - 11.8	1.0 - 1.2	7.2 - 8.7
Hybrid motor mounting bolt	42.2 - 44.1	4.3 - 4.5	31.1 - 32.5
Hybrid clutch actuator mounting bolt	21.6 - 26.5	2.2 - 2.7	15.9 - 19.5
EWP mounting bolt	9.8 - 11.8	1.0 - 1.2	7.2 - 8.7
HSG mounting bolt	44.1 - 49.0	4.5 - 5.0	32.5 - 36.1

Description

Hybrid motor system is equipped with two electric motors.
These motors include the drive motor and the HSG that plays the role of starter motor and alternator (generator).
The drive motor moves the vehicle, reduces the noise, vibration and harshness (NVH), and improves fuel efficiency.
The drive motor supplements the engine power when the driver press the accelerator pedal or when the vehicle is running in the fuel efficiency mode.
In addition, the drive motor plays the role of an alternator (generator) when decelerating or braking to charge the high-voltage battery.
The HSG performs restart/cold start of the engine while the vehicle is running, or charges the high-voltage battery.

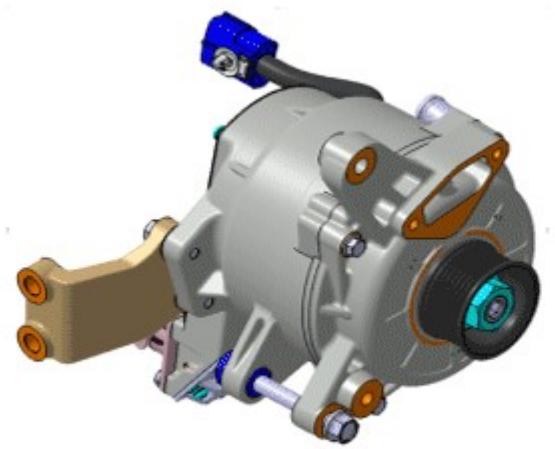

[HSG]

[Drive motor]

Power Flow

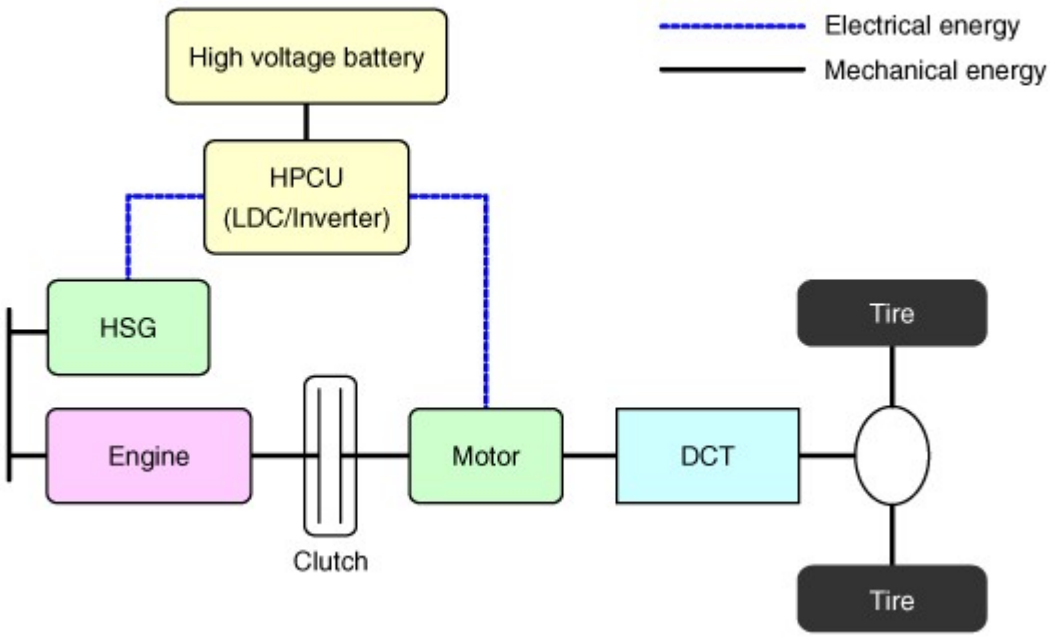

Component location

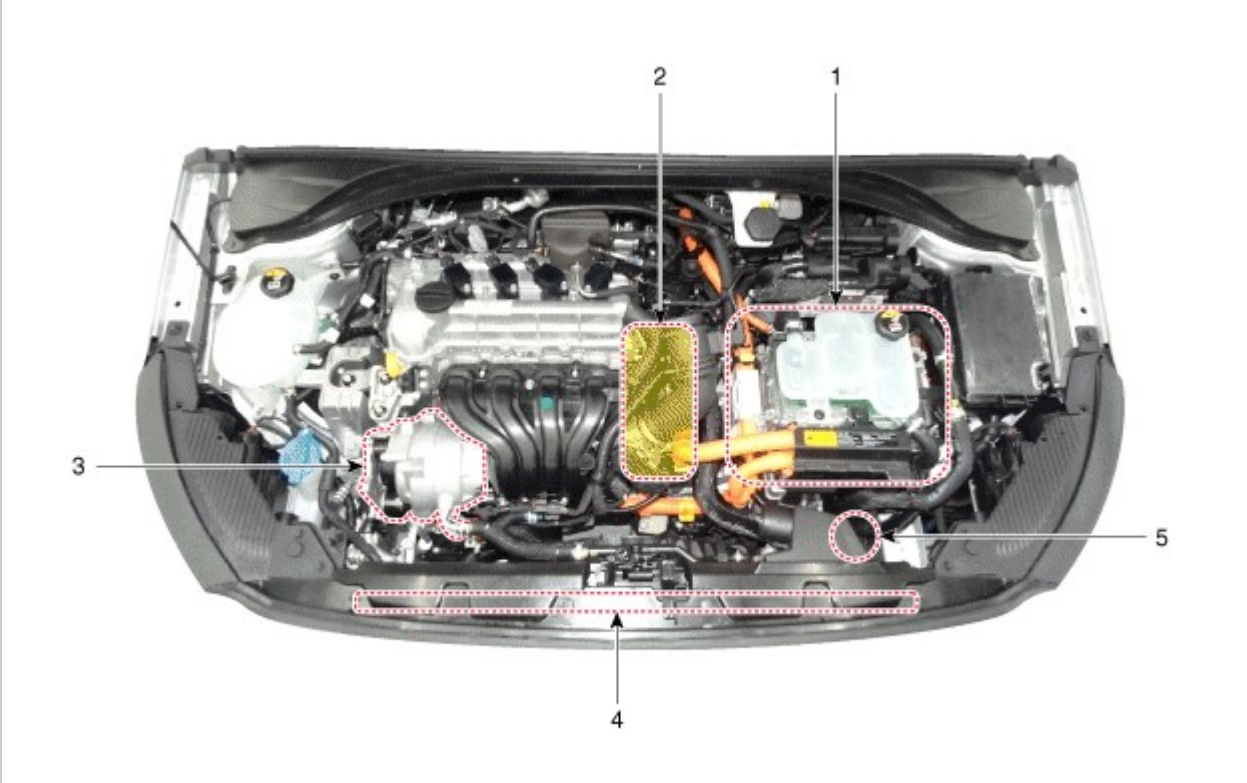

1. HPCU (Hybrid Power Control Unit) (LDC+MCU+HCU+Reservoir)
2. Hybrid drive motor
3. Hybrid starter generator (HSG)
4. Electrical radiator
5. Electric water pump (EWP)

Components

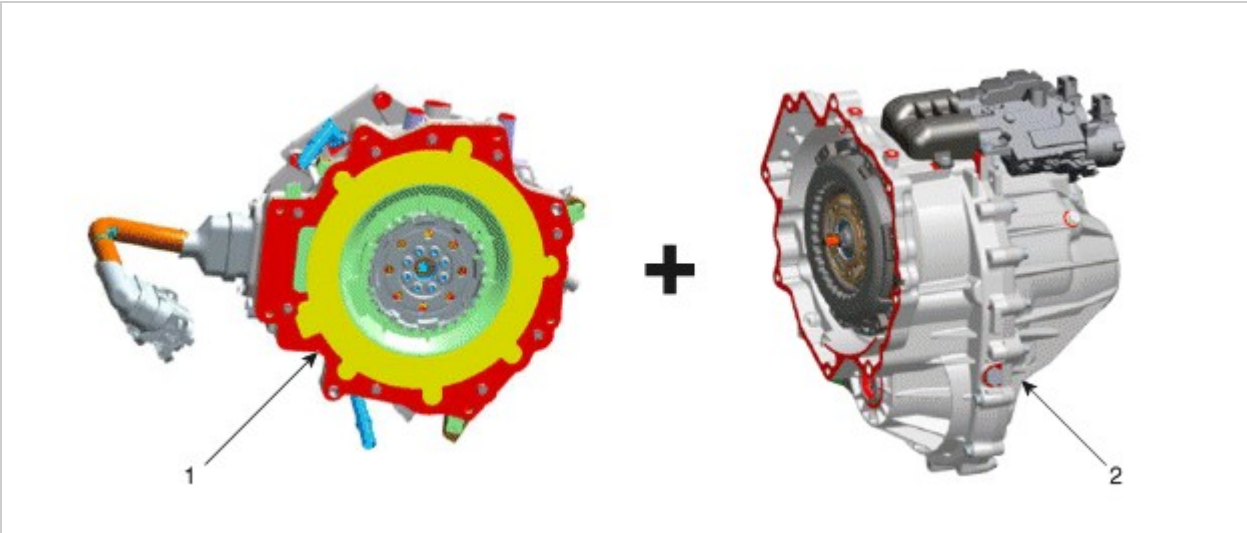

1. Hybrid motor assembly
2. Double clutch transmission (DCT)

Inspection

1. Use the mΩ tester to check the line resistance.

Category	Inspection area	Inspection criteria	Remarks
Resistance (Line - Line)	U - V	35.3 mΩ ± 5%	Based on ambient temperature (20°C)
	V - W		
	W - U		

2. Check the temperature sensor resistance.

Category	Inspection area	Inspection criteria	Remarks
Resistance (Temperature sensor)	Pin 4 - 8	8kΩ (30°C / 86°F) - 20kΩ (10°C / 50°F)	10 - 30°C / 50 - 86°F

3. Check the resolver sensor resistance.

Category	Inspection area	Inspection criteria	Remarks
Resistance (Resolver sensor)	Pin 1 - 5	11.7 Ω ± 10%	Based on ambient temperature (20°C)
	Pin 2 - 6	32 Ω ± 10%	
	Pin 3 - 7	27 Ω ± 10%	

4. Perform the insulation test.

Category	Inspection area	Inspection criteria	Remarks
Insulation (Housing, cover)	W - U - V	10 MΩ↑	DC 540 V, 1 minute
		2.5 mA↓	AC 1600 V, 1 minute
	Position (resolver) sensor	100 MΩ↑	DC 500 V, 1 minute
	Temperature sensor	100 MΩ↑	

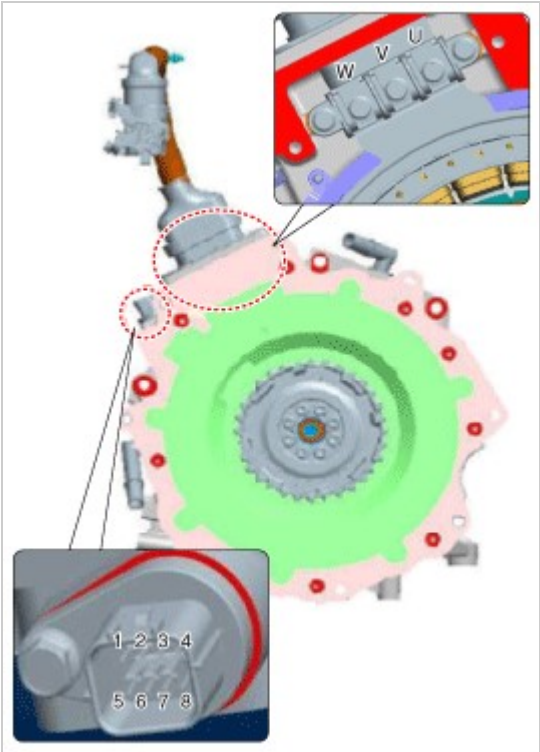

Removal

1. Remove the double clutch transmission (DCT) from the vehicle.
   (Refer to DCT (Double Clutch Transmission) System - "Double Clutch Transmission".)
2. Remove the water pump (EWP) (A).

   Tightening torque:
   18.6 - 23.5 N.m (1.9 - 2.4 kgf.m, 13.7 - 17.4 lb-ft)

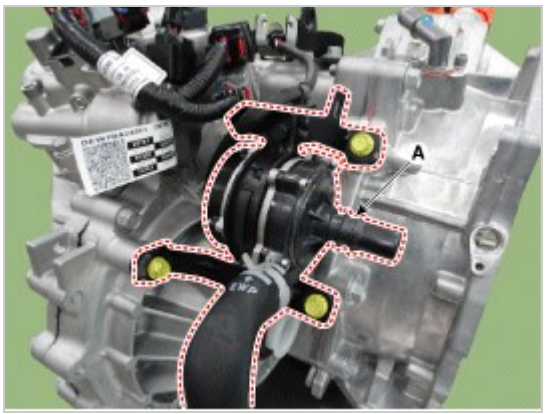

3. Disconnect the reservoir hose (A).

⚠ CAUTION

- After disconnecting the hose, block the end to prevent the hydraulic fluid from leaking.
- Make sure that the hydraulic fluid does not drop on other components or your body.
- If the hydraulic fluid dropped on other components or your body, wash it immediately.

4. Remove the engine clutch actuator (B).

Tightening torque:
21.6 - 26.5 N.m (2.2 - 2.7 kgf.m, 15.9 - 19.5 lb-ft)

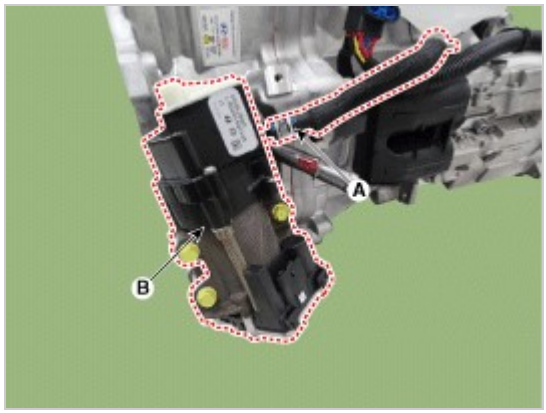

⚠ CAUTION

- When connecting the reservoir hose to the actuator, make sure that the clamp does not interfere with other components.
- Completely remove the air from the engine clutch system.
- After installing the hose, place the clamp between the markings.
- Make sure that the reservoir hose does not get twisted after installation.
- After the installation, both wings of the clamp should face the front of the transmission.
- Make sure that no foreign substance, such as dust, does not get inside the hose during the transportation, storage and assembly of the components.

5. Remove the adaptor (A).

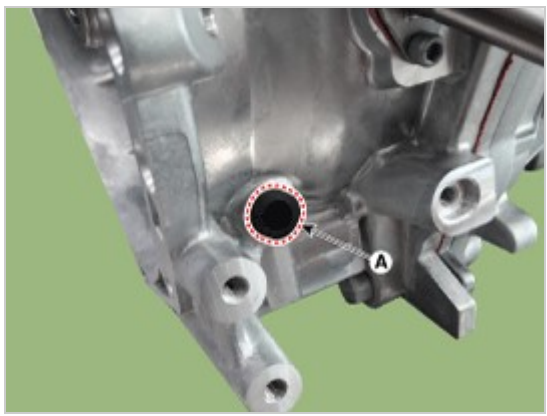

⚠ CAUTION

- Make sure that the O-ring is not damaged, scratched, or deformed while mounting the adaptor.

6. Remove the concentric sleeve cylinder (A).

Tightening torque:
9.8 - 11.8 N.m (1.0 - 1.2 kgf.m, 7.2 - 8.2 lb-ft)

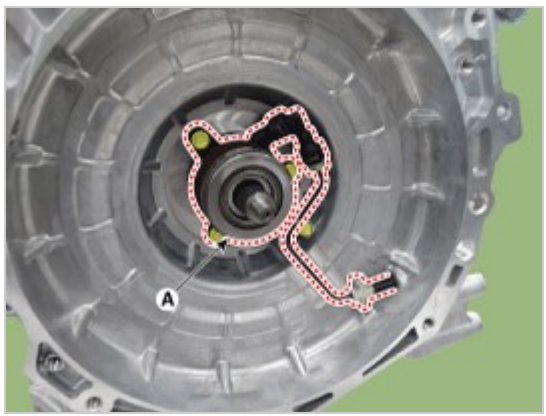

7. Unscrew the bolts and remove the motor assembly (A).

Tightening torque:
42.2 - 53.9 N.m (4.3 - 5.5 kgf.m, 31.1 - 39.8 lb-ft)

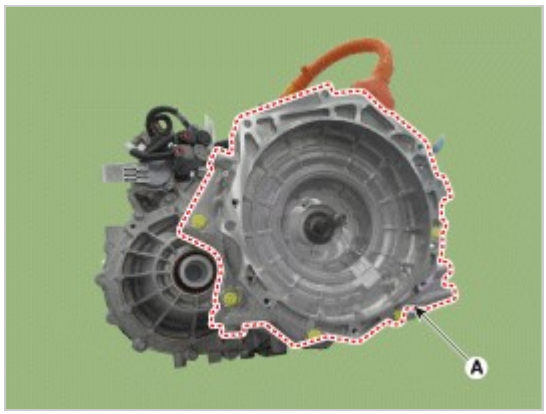

Installation

1. To install, reverse the removal procedure.
2. Use the GDS to perform the resolver compensation procedure shown below.
   GDS Motor / HSG Resolver Compensation Procedure

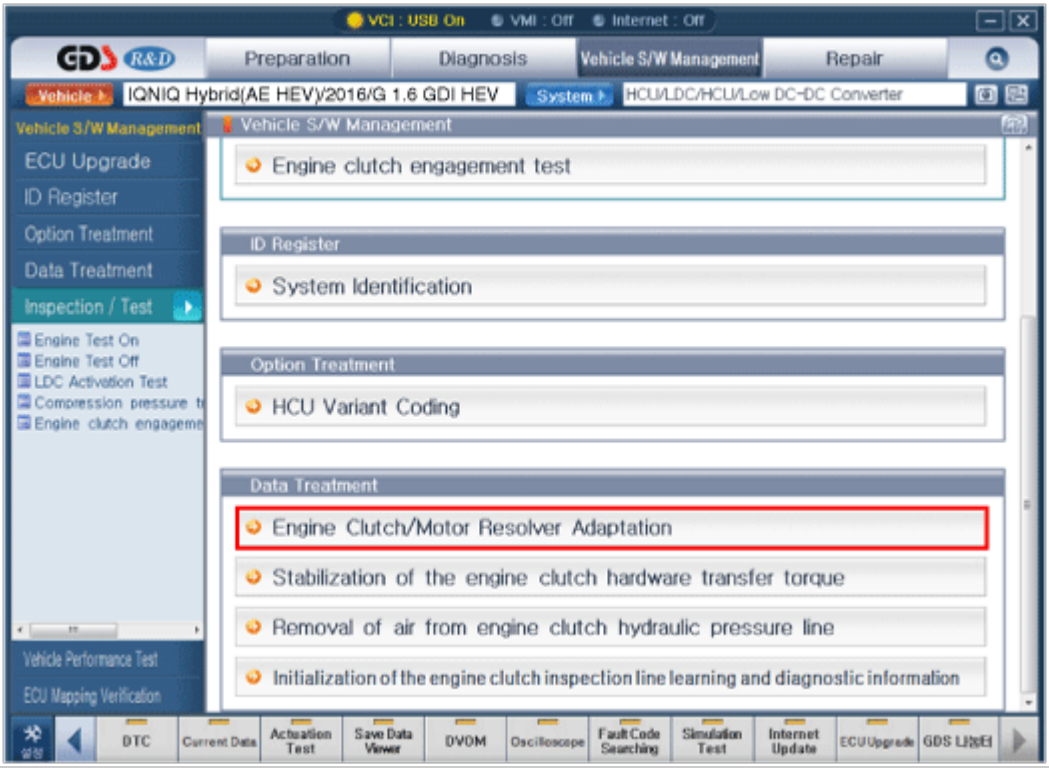

Hybrid Motor System

Component location

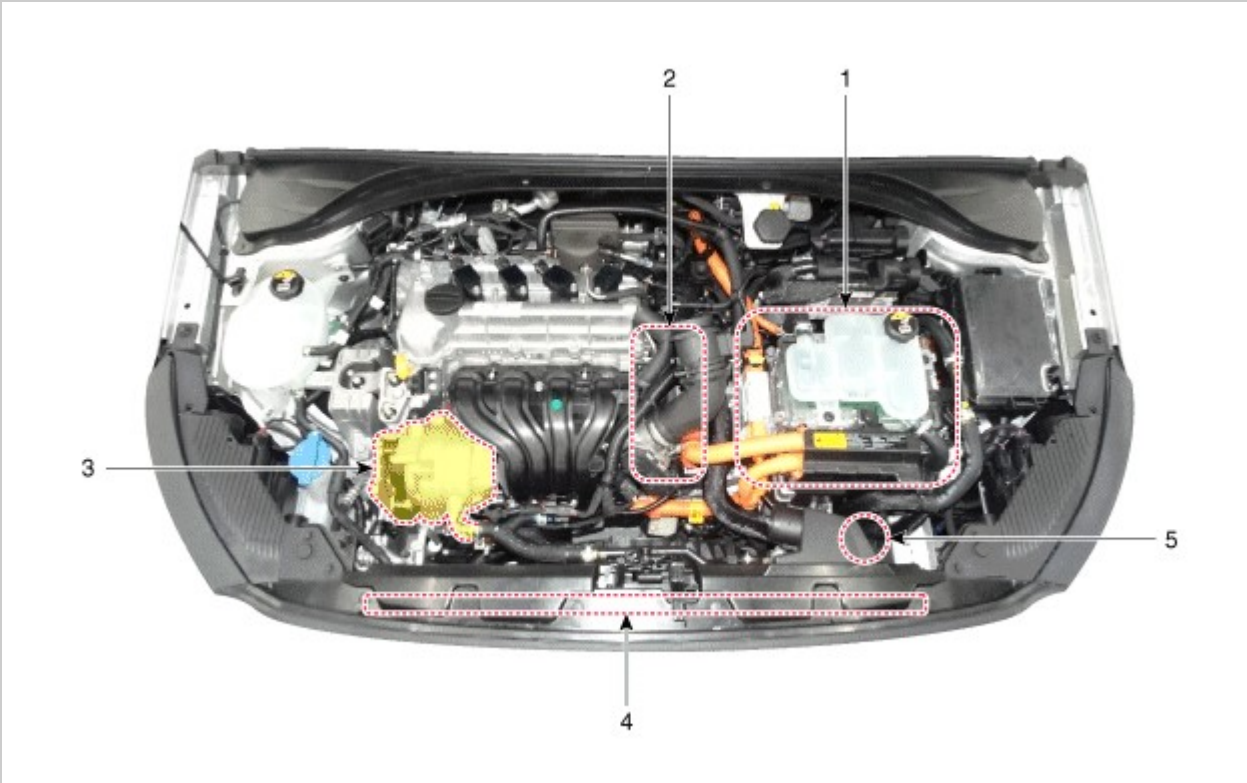

1. HPCU (Hybrid Power Control Unit) (LDC+MCU+HCU+Reservoir)
2. Hybrid drive motor
3. Hybrid starter generator (HSG)
4. Electrical radiator
5. Electric water pump (EWP)

Hybrid Motor System

Specifications

Classification		Unit	Specifications
Voltage		Vdc	204
Driving	Torque	Nm / rpm / sec	35.3 / 0 - 2160 / 5
	Output	kW / rpm / sec	8.0 / 2160 - 12000 / 5
Generative	Torque	Nm / rpm / Min	21.4 / 0 - 3250 / 20
	Output	kW / rpm / Min	7.3 / 3250 - 15000 / 20

Maximum speed (mechanical limit)	rpm	18000
Driving method	-	Belt - driven
RPM (Base / Maximum)	rpm	2160 / 15000

Hybrid Motor System

Removal

WARNING

- When working on the high voltage system, make sure that you are familiar and comply with the "Safety Precautions, Cautions and Warnings". If you do not comply with them, a serious accident such as electric shock or leakage may occur.
- When working on the high voltage system, make sure that you cut off the high voltage first according to the "High Voltage Cut-off Procedure". If you do not comply with them, a serious accident such as electric shock or leakage may occur.

NOTICE

- Use a fender cover to prevent damage of the vehicle painting.
- Make sure that connectors and wiring are not damaged when separating them.

Information

- Mark the wiring connectors and hoses to prevent wrong connection.

1. Cut off the high voltage.
   (Refer to Generals - "High Voltage Cut-off Procedure".)
2. Open the drain plug to discharge inverter coolant. Leave the reservoir cap open for smooth discharge.
   (refer to Hybrid Motor Cooling System - "Coolant".)
3. Remove the drive belt.
   (Refer to Engine Mechanical System - "Drive Belt".)
4. Remove the engine mounting support bracket.
   (Refer to Engine Mechanical System - "Engine Mounting".)
5. Remove the mechanical drive belt tensioner.
   (Refer to Engine Mechanical System - "Drive Belt Tensioner".)
6. Remove the timing chain cover idler.
   (Refer to Engine Mechanical System - "Idler".)
7. Disconnect the HSG sensor connector (A).

8. Remove the cooler hose (A) from the HSG.

9. Remove the intake manifold.
   (Refer to Engine Mechanical System - "Intake Manifold".)
10. Disconnect the HSG high-voltage cable connector (A).

11. Remove the HSG support bracket mountine bolts (A).

Tightening torque:
44.1 - 53.9 N.m (4.5 - 5.5 kgf.m, 32.5 - 39.8 lb-ft)

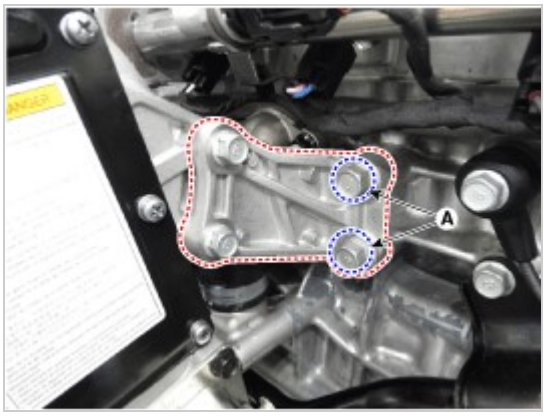

12. Remove the HSG (A).

Tightening torque:
44.1 - 49.0 N.m (4.5 - 5.0 kgf.m, 32.5 - 36.1 lb-ft)

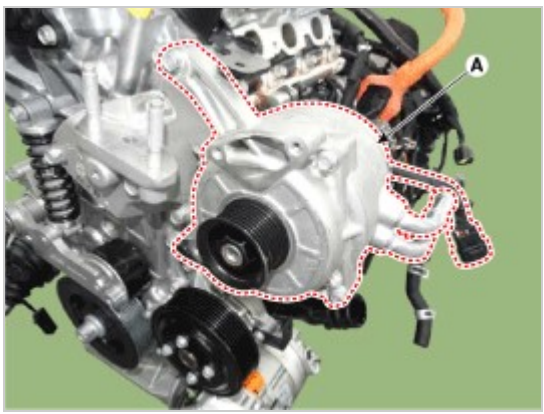

Installation

NOTICE

- Be careful not to cause any damage on the hose when tightening the clamp.
- Mount the clamp tightening part in the designated direction so that interference does not occur with the adjacent parts.

1. To install, reverse the removal procedure.
2. Perform resolver sensor compensation.
   Perform compensation according to the GDS motor / HSG resolver compensation procedure shown below.

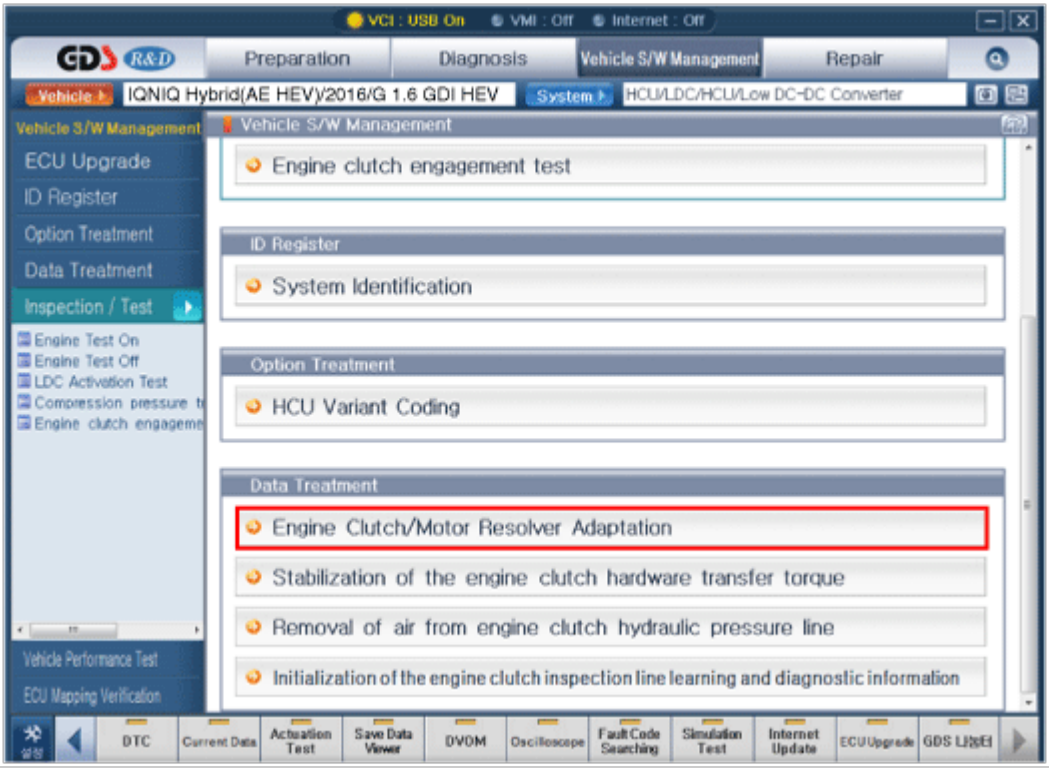

3. Fill the coolant in the hybrid cooling system and use the GDS to perform air bleeding.
   (Refer to Hybrid Motor Cooling System - "Coolant".)
4. Check for the leakage in the hose connections while the engine is running.

Inspection

1. Use the mΩ tester to check the line resistance.

Category	Inspection Based on	Inspection Area	Inspection method	Remarks
Resistance (Line - Line)	U - V	195 mΩ± 5%	Measuring equipment: Milliohm meter Measuring point: U - V - W Line resistance per part Applied current : 10 A	Change depending on temperature: + 0.4%/°C
	V - W			
	W - U			

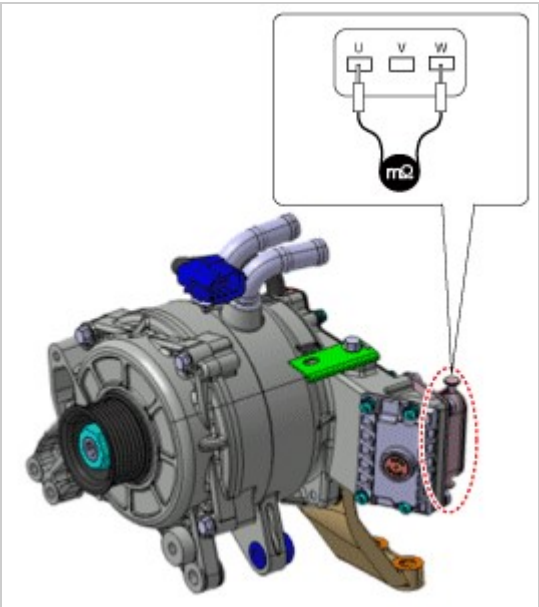

2. Check the temperature sensor resistance.

Category	Inspection Based on	Inspection Area	Inspection method	Remarks
	Pin 4 - 9	10.92 - 13.44 kΩ	Measuring equipment: Multimeter	

Resistance (Temperature sensor)				Based on ambient temperature (20°C)

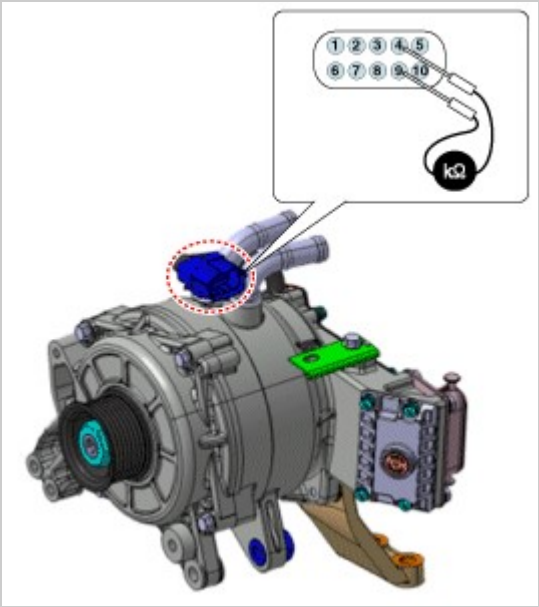

3. Check the resolver sensor resistance.

Category	Inspection area	Inspection criteria	Remarks
Resistance (Resolver sensor)	Pin 1 - 6	15.8 ± 2Ω	Based on ambient temperature (23°C)
	Pin 2 - 7	28.2 ± 2Ω	
	Pin 3 - 8	28.2 ± 2Ω	

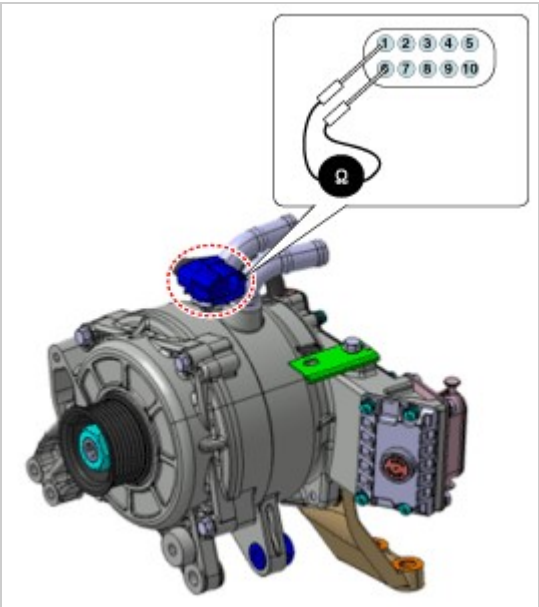

4. Perform the insulation test.

Category	Inspection Based on	Inspection Area	Inspection method	Remarks
Insulation (Housing, cover)	W - U - V	10 MΩ↑	Measuring equipment: Voltage tester Measuring method : After 3-phase short-circuit Measurement between the phase and housing	DC 540 Vdc, 1 min
		5 mA↓		AC 1600 Vac, 1 min
	Position (resolver) sensor	10 MΩ↑		DC 500 Vdc, 1 min
	Temperature sensor	10 MΩ↑		

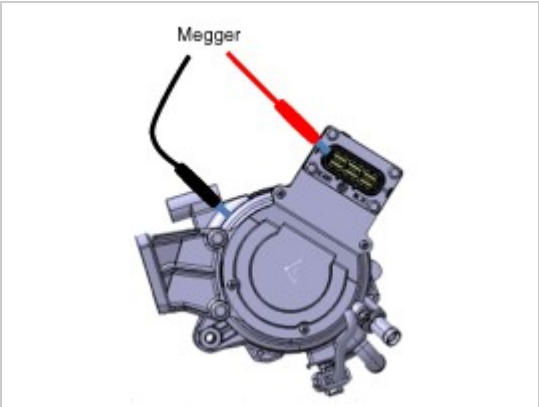

Hybrid Motor System

Description

In a hybrid electric vehicle, HCU (an upper level controller), LDC (power converter), and inverter are integrated in the HPCU. HPCU is located on the left side of the engine compartment.

The inverter provides high-voltage AC current to the two motors (drive motor and HSG) and controls them optimally based on the driving conditions through communication with the HCU.

The inverter also changes the DC current from the high-voltage battery into 3-phase AC current that is required for the operation of the motor.

The inverter receives the torque commend from the HCU to control the motor. The motor acts as a generator during deceleration and braking and changes the 3-phase AC current into the DC current to charge the battery.

Inverter is also called a motor control unit (MCU) from the perspective of a controller.

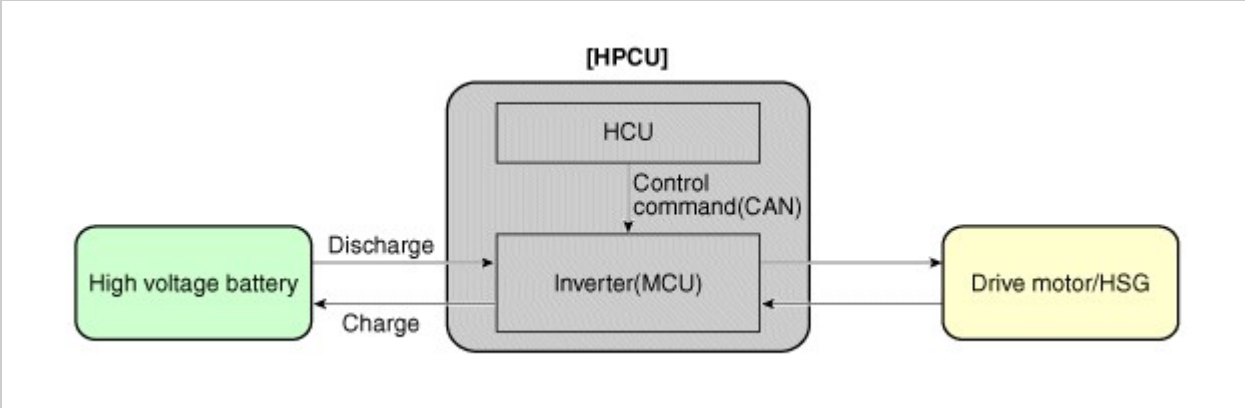

Hybrid Motor System

Component location

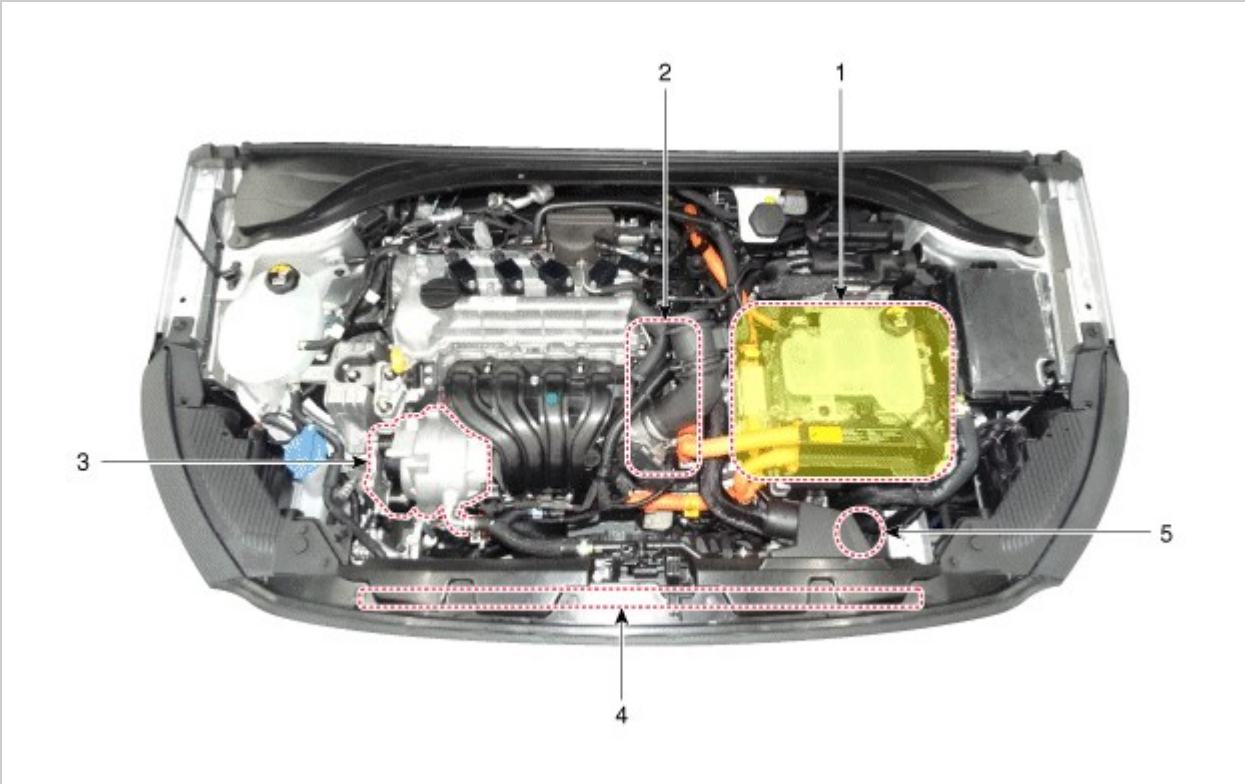

1. HPCU (Hybrid Power Control Unit) (LDC+MCU+HCU+Reservoir)
2. Hybrid drive motor
3. Hybrid starter generator (HSG)
4. Electrical radiator
5. Electric water pump (EWP)

Components

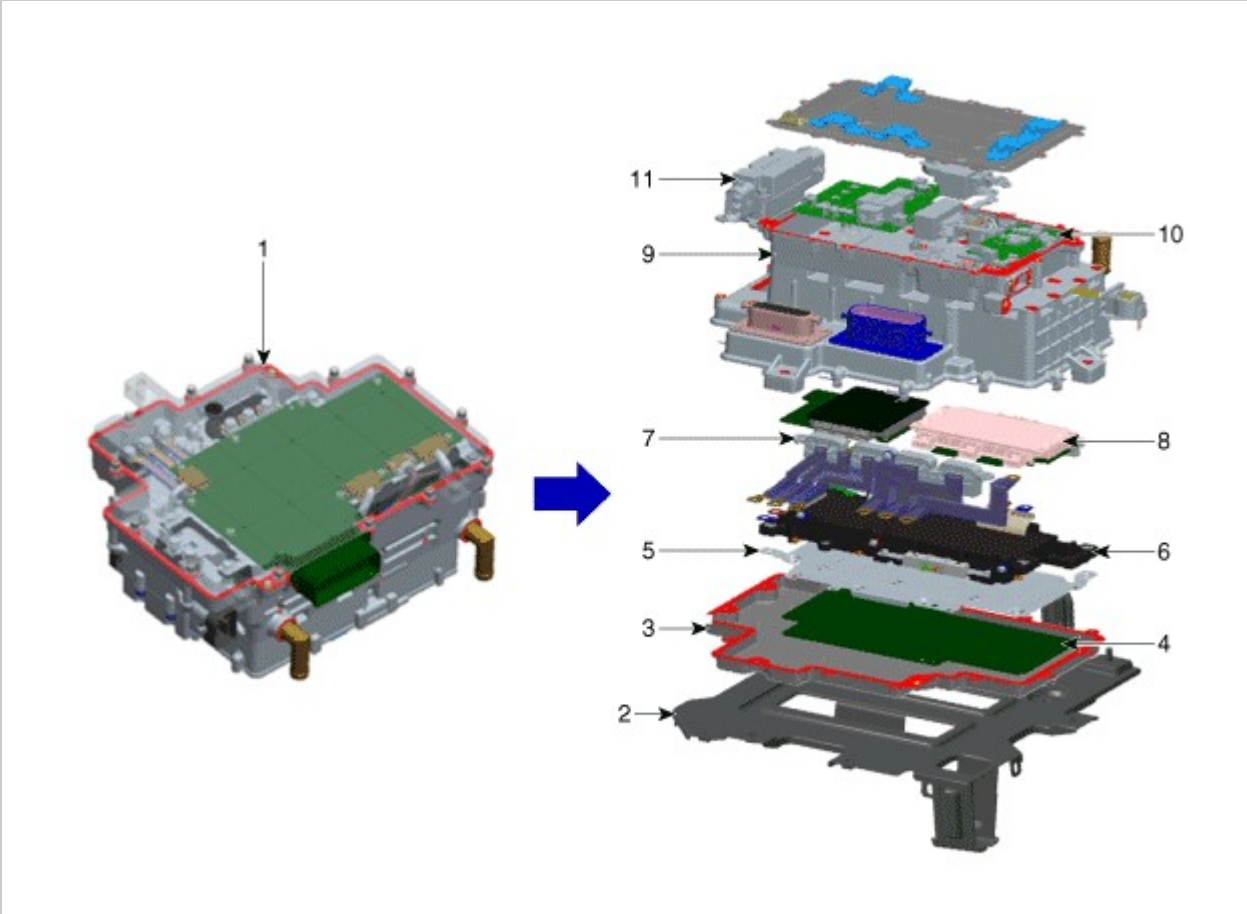

1. HPCU (Hybrid Power Control Unit)
2. HPCU tray
3. HPCU cover
4. Integrated board (MCU / HCU / LDC)
5. Shield plate
6. Capacitor
7. Current sensor module
8. Gate board + Power module
9. Heat sink (water - cooled)
10. LDC (Low voltage DC - DC Converter)
11. High - voltage junction box

Inverter (MCU)

- An inverter supplies AC current to the drive motor and HSG.
- Depending on the driving conditions, the drive motor and HSG of the integrated board (control board) may act as a generator.

Integrated board (control board)

- One CPU controls two motors (drive motor and HSG)
- Sensors send the position, current, and temperature information to the CPU. The CPU generates the pulse width modulation signal and sends it to the gate board.

Capacitor

- Capacitor is an energy storage device for smoothing the current.

Current sensor

- Current sensor measures the current that flows through the motor, and is attached to each phase of a 3 - phase busbar.

Power module

- Power module has six switches that are used to convert DC current to AC current.

Heat sink

- Heat sink dissipates the heat of the coolant and is located between the power module and the cooling path.

Diagram System Circuit

A high-capacity power module is applied to the two high-voltage motors.

The power module consists of a high - speed switching circuit that is isolated from the IGBT and DIODE circuits.

The capacity of the high-voltage battery is approx. 270V. But the power module needs to use a voltage of maximum 650V to ensure stability and reliability.

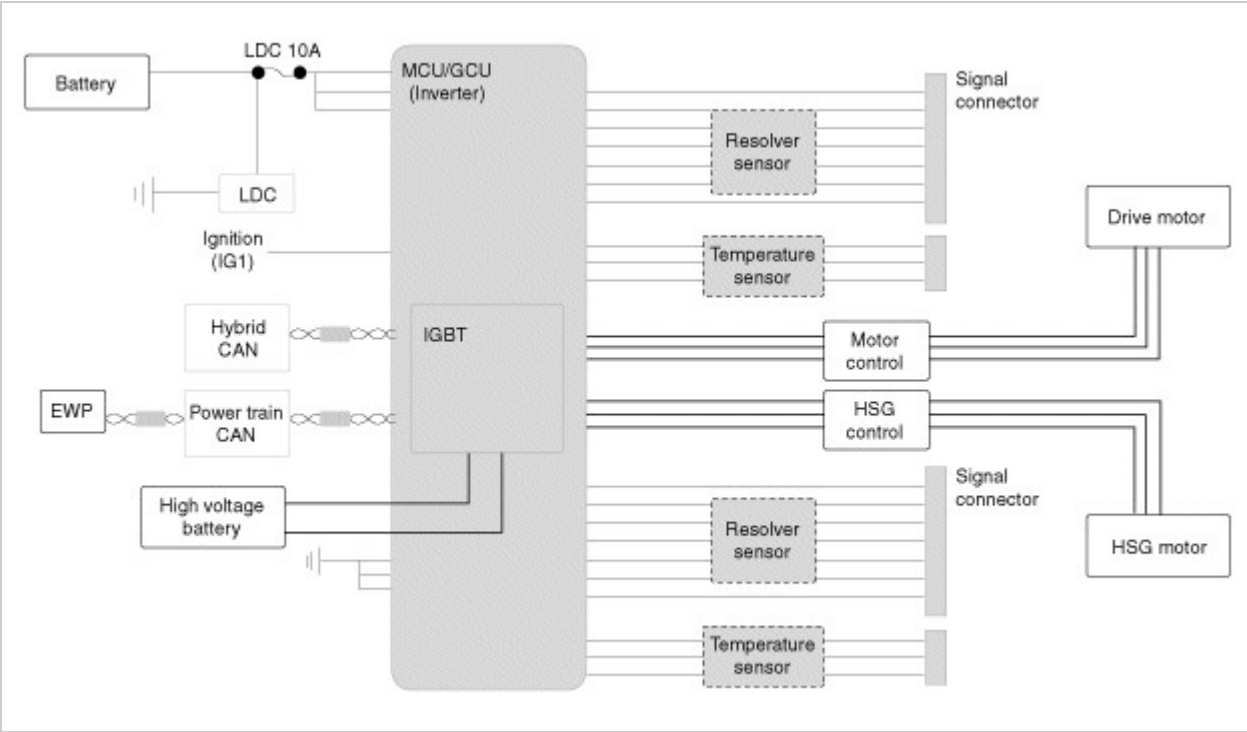

MCU terminal input/output signal connector

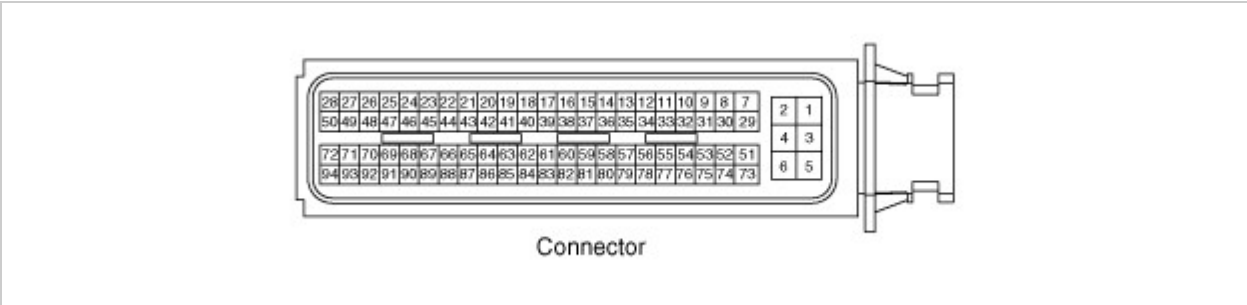

Functions of MCU Terminal

Connector (94 pins)

Terminal	Signal	Usage
5	VB1	Constant power (B+)
6	VB2	Constant power (B+)
3	GND1	Power ground
4	VB3	Constant power (B+)
1	GND2	Power ground
2	GND3	Power ground
73	IGN	Ignition
74	-	
75	L_CAN_H	C_CAN_[High]
76	L_CAN_L	C_CAN_[Low]
77	-	
78	P_CAN_H	P - CAN [High]
79	P_CAN_L	P - CAN [Low]
80	-	
81	H_CAN_H	H - CAN [High]
82	H_CAN_L	H - CAN [Low]
83	-	
84	-	
85	-	
86	-	
87	H_REZ+	HSG resolver (+) power
88	H_REZ-	HSG resolver (-) power
89	-	
90	-	
91	-	

92	-	
93	M_REZ+	Motor resolver (+) power
94	M_REZ-	Motor resolver (-) power
51	-	
52	-	
53	-	
54	-	
55	-	
56	-	
57	-	
58	-	
59	-	
60	-	
61	-	
62	H_REZS1	HSG resolver sensor (S1) input signal
63	H_REZS3	HSG resolver sensor (S3) input signal
64	H_REZS2	HSG resolver sensor (S2) input signal
65	H_REZS4	HSG resolver sensor (S4) input signal
66	H_REZ_S	SHEILD
67	-	
68	M_REZS1	Motor resolver sensor (S1) input signal
69	M_REZS3	Motor resolver sensor (S3) input signal
70	M_REZS2	Motor resolver sensor (S2) input signal
71	M_REZS4	Motor resolver sensor (S4) input signal
72	M_REZ_S	SHEILD
29	-	
30	-	
31		
32		
33		
34		
35	-	
36		
37		
38	START_SIGNAL	Start signal input signal
39	-	
40	-	
41	-	
42	HSG_TM_GND	Sensor ground
43	HSG_TM	HSG temperature sensor input signal
44	HSG_TM_S	SHEILD
45	-	
46	-	
47	-	
48	MOT_TM_GND	Sensor ground
49	MOT_TM	Motor temperature sensor input signal
50	MOT_TM_S	SHEILD
7	-	
8	-	
9	-	
10	-	
11	-	
12	-	
13	-	
14	-	
15	BRAKE_SW2	Brake switch 2 input signal (NC, IG1)
16	BRAKE_SW1	Brake switch 1 input signal (NO, B+)
17		
18		
19		

20		
21		
22		
23		
24		
25		
26		
27		
28		

MCU terminal input/output signal

Terminal	Signal	Usage	Condition	Type	Level	Waveform
5	VB1	Constant power (B+)	Constant	DC Voltage	Battery Power	
6	VB2	Constant power (B+)	Constant	DC Voltage	Battery Power	
3	GND1	Power ground	Constant	DC Voltage	Max. 50 mV	
4	VB3	Constant power (B+)	Constant	DC Voltage	Battery Power	
1	GND2	Power ground	Constant	DC Voltage	Max. 50 mV	
2	GND3	Power ground	Constant	DC Voltage	Max. 50 mV	
73	IGN	Ignition	IG ON	DC Voltage	Battery Power	
74	-					
75	L_CAN_H	C - CAN [High]	IG ON	Pulse	Dominant : 2.75 - 4.5 (3.5) V Recessive : 2.0 - 3.0 (2.5) V	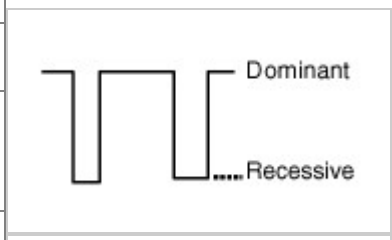
76	L_CAN_L	C - CAN [Low]	IG ON	Pulse	Recessive : 2.0 - 3.0 (2.5) V Dominant : 0.5 - 2.25 (1.5) V	
77	-					
78	P_CAN_H	P - CAN [High]	IG ON	Pulse	Dominant : 2.75 - 4.5 (3.5) V Recessive : 2.0 - 3.0 (2.5) V	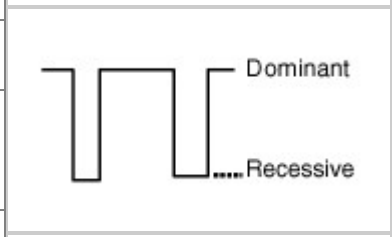
79	P_CAN_L	P - CAN [Low]	IG ON	Pulse	Recessive : 2.0 - 3.0 (2.5) V Dominant : 0.5 - 2.25 (1.5) V	
80	-					
81	H_CAN_H	H - CAN [High]	IG ON	Pulse	Dominant : 2.75 - 4.5 (3.5) V Recessive : 2.0 - 3.0 (2.5) V	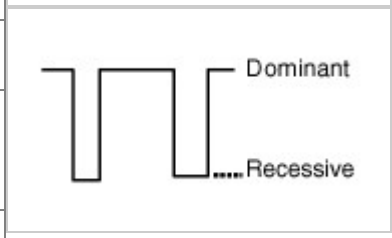
82	H_CAN_L	H - CAN [Low]	IG ON	Pulse	Recessive : 2.0 - 3.0 (2.5) V Dominant : 0.5 - 2.25 (1.5) V	
83	-					
84	-					
85	-					
86	-					
87	H_REZ+	HSG resolver (+) power	IG ON	Differential, Analog	14 Vpp sine wave	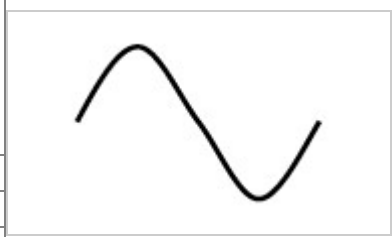
88	H_REZ-	HSG resolver (-) power				
89	-					
90	-					
91	-					
92	-					
93	M_REZ+	Motor resolver (+) power	IG ON	Differential, Analog	14 Vpp sine wave	
94	M_REZ-	Motor resolver (-) power				

						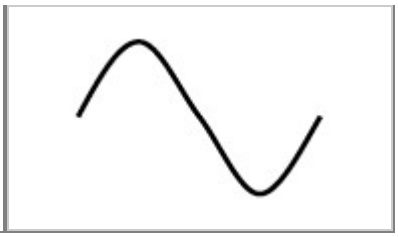
51	-					
52	-					
53	-					
54	-					
55	-					
56	-					
57	-					
58	-					
59	-					
60	-					
61	-					
62	H_REZS1	HSG resolver sensor (S1) input signal	IG ON	Differential, Analog	0 - 3 Vpp sine wave	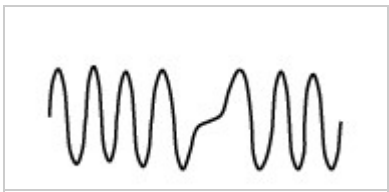
63	H_REZS3	HSG resolver sensor (S3) input signal				
64	H_REZS2	HSG resolver sensor (S2) input signal	IG ON	Differential, Analog	0 - 3 Vpp sine wave	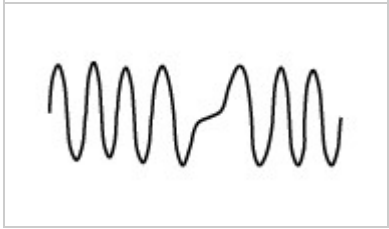
65	H_REZS4	HSG resolver sensor (S4) input signal				
66	H_REZ_S	SHEILD	Constant	DC Voltage	Max. 50 mV	
67	-					
68	M_REZS1	Motor resolver sensor (S1) input signal	IG ON	Differential, Analog	0 - 3 Vpp sine wave	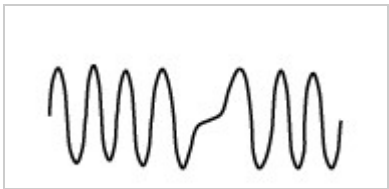
69	M_REZS3	Motor resolver sensor (S3) input signal				
70	M_REZS2	Motor resolver sensor (S2) input signal	IG ON	Differential, Analog	0 - 3 Vpp sine wave	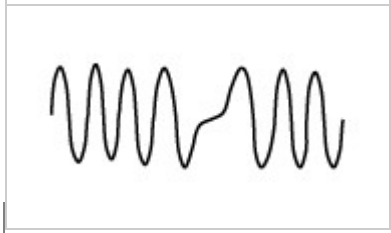
71	M_REZS4	Motor resolver sensor (S4) input signal				
72	M_REZ_S	SHEILD	Constant	DC Voltage	Max. 50 mV	
29	-					
30	-					
31						
32						
33						
34						
35	-					
36						
37						
38	START_SIGNAL	Start signal input signal	IG ST	DC Voltage	Battery voltage	
39	-					
40	-					
41	-					
42	HSG_TM_GND	Sensor ground	Constant	DC Voltage	Max. 50 mV	
43	HSG_TM	HSG temperature sensor input signal	IG ON	Analog	0 - 5V	
44	HSG_TM_S	SHEILD	Constant		Max. 50 mV	

				DC Voltage		
45	-					
46	-					
47	-					
48	MOT_TM_GND	Sensor ground	Constant	DC Voltage	Max. 50 mV	
49	MOT_TM	Motor temperature sensor input signal	IG ON	Analog	0 - 5V	
50	MOT_TM_S	SHEILD	Constant	DC Voltage	Max. 50 mV	
7	-					
8	-					
9	-					
10	-					
11	-					
12	-					
13	-					
14	-					
15	BRAKE_SW2	Brake switch 2 input signal (NC, IG1)	IG ON	DC Voltage	Battery voltage	
16	BRAKE_SW1	Brake switch 1 input signal (NO, B+)	Constant	DC Voltage	Battery voltage	
17						
18						
19						
20						
21						
22						
23						
24						
25						
26						
27						
28						

Removal

NOTICE

- MCU is integrated with HPCU. Therefore, to install / remove the MCU, follow the procedure for installing / removing the HPCU. (Refer to Hybrid Control System - "HPCU (Hybrid Power Control Unit)".)
- You need to perform resolver compensation whenever the engine, HPCU, drive motor, or starter generator (HSG) is replaced, removed, or reinstalled.
  Perform compensation according to the GDS motor / HSG resolver compensation procedure shown below.

GDS Motor/HSG Resolver Compensation Procedure

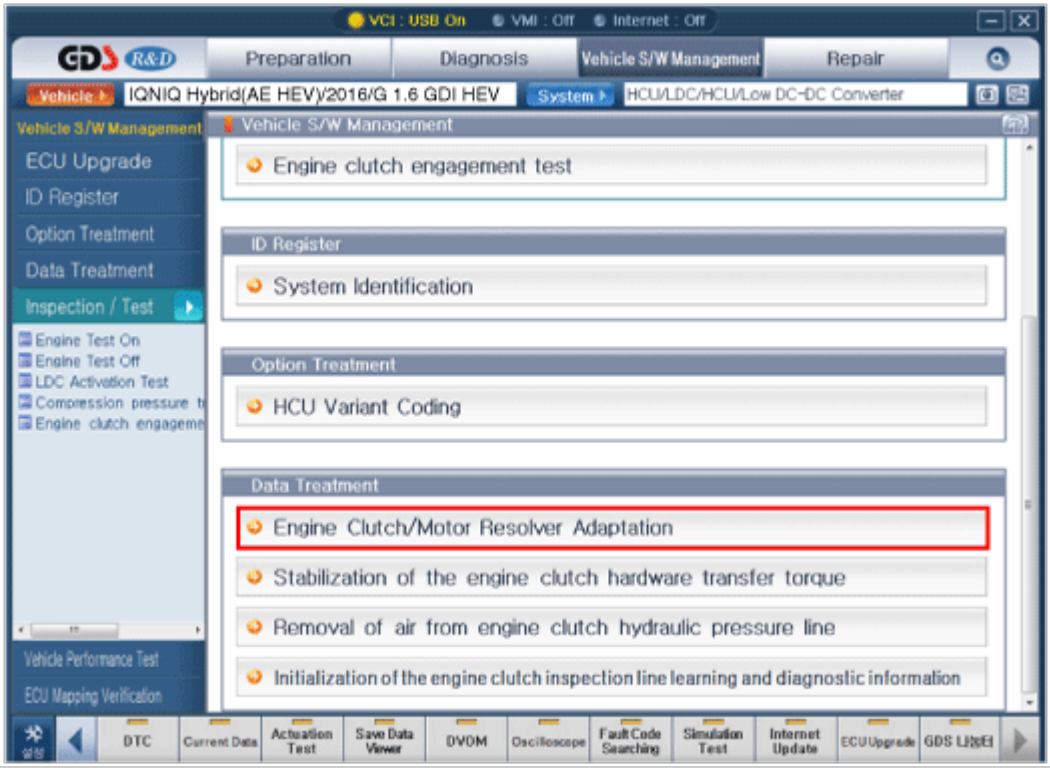

Hybrid Motor System

Description

- To efficiently control the drive motor, you need to know the absolute location of a motor rotor (permanent magnet).
- Resolver detects the absolute location of the motor rotor.

[Drive motor resolver sensor]

[HSG motor resolver sensor]

Hybrid Motor System

Circuit Diagram

Resolver sensor (hybrid drive motor)

[Circuit diagram]

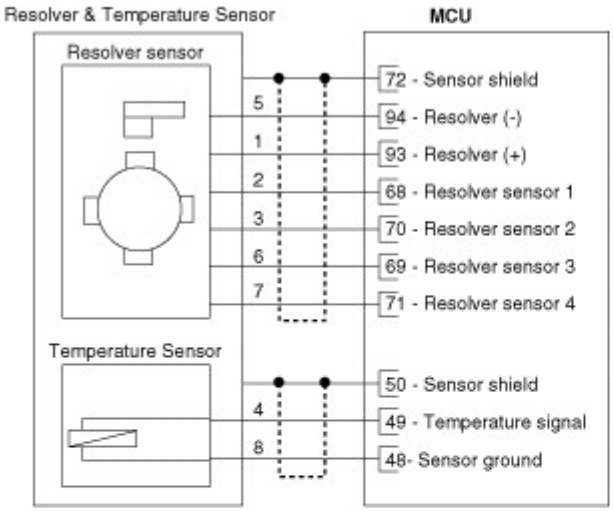

[Connection information]

Terminal	Connecting area	Function
1	MCU (93)	Resolver (+)
2	MCU (68)	Resolver sensor 1
3	MCU (70)	Resolver sensor 2
4	MCU (49)	Temperature signal
5	MCU (94)	Resolver (-)
6	MCU (69)	Resolver sensor 3
7	MCU (71)	Resolver sensor 4
8	MCU (48)	Temperature sensor ground

[Harness connector]

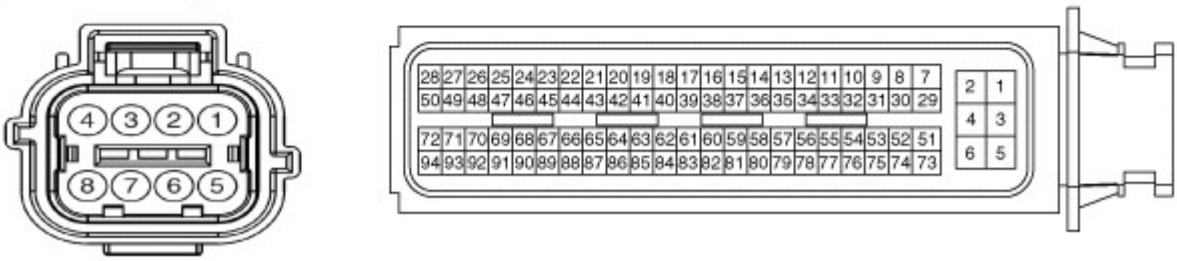

Resolver & temperature sensor

MCU

Resolver sensor (HSG)

[Circuit diagram]

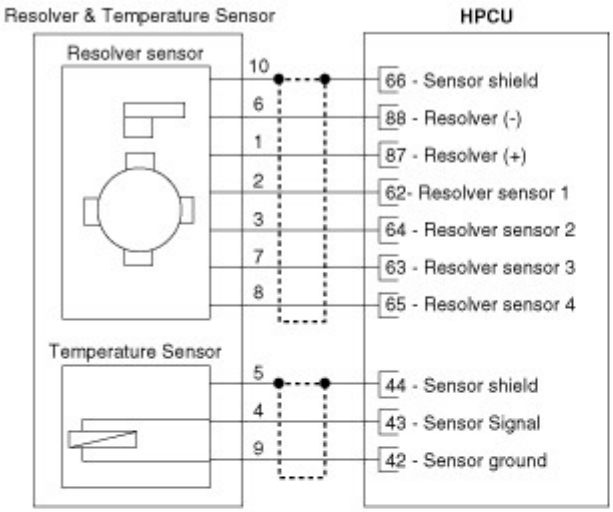

[Connection information]

Terminal	Connecting area	Function
1	HPCU (87)	Resolver sensor(+)
2	HPCU (62)	Resolver sensor 1
3	HPCU (64)	Resolver sensor 2
4	HPCU (43)	Temperature signal
5	HPCU (44)	Temperature shield
6	HPCU (88)	Resolver sensor (-)
7	HPCU (63)	Resolver sensor 3
8	HPCU (65)	Resolver sensor 4
9	HPCU (42)	Temperature sensor ground
10	HPCU (66)	Resolver sensor shield

[Harness connector]

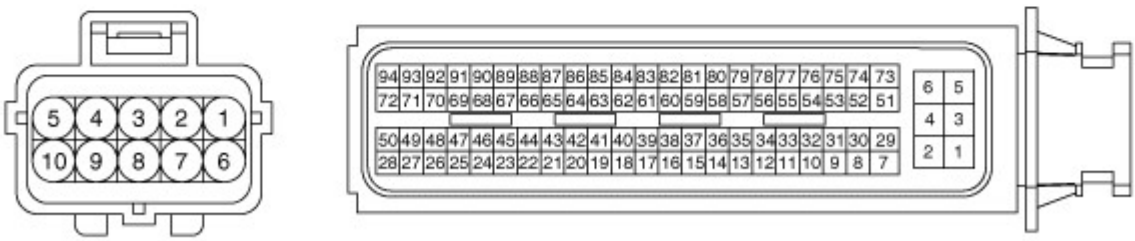

Resolver & temperature sensor

HPCU

Inspection

1. Check the resolver sensor resistance.
   [Hybrid drive motor]
   Measuring equipment: Multimeter

Category	Inspection area	Inspection criteria	Remarks
Resistance (Resolver sensor)	Pin 1 - 5	11.7 Ω ± 10% (10.5 - 12.9 Ω)	Based on ambient temperature (20°C)
	Pin 2 - 6	32 Ω ± 10% (28.8 - 35.2 Ω)	
	Pin 3 - 7	32 Ω ± 10% (28.8 - 35.2 Ω)	

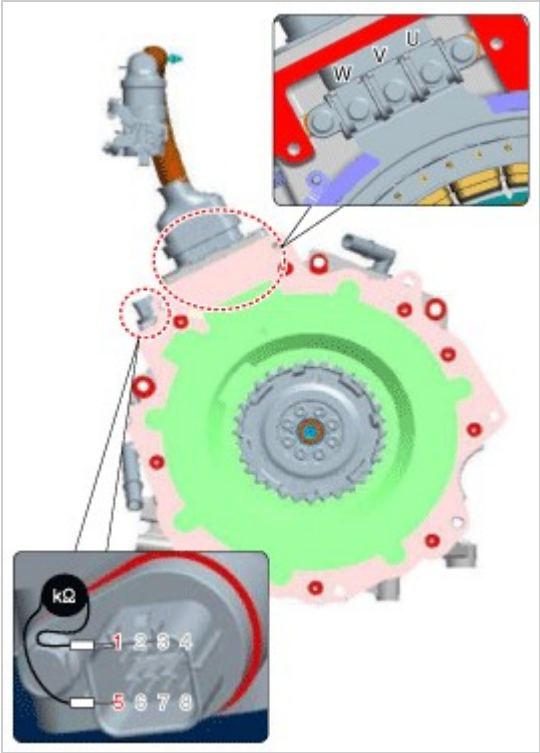

   [Hybrid starter generator (HSG)]
   Measuring equipment: Multimeter

Category	Inspection area	Inspection criteria	Remarks
Resistance (Resolver sensor)	Pin 1 - 6	15.8 ± 2Ω	Based on ambient temperature (23°C)
	Pin 2 - 7	28.2 ± 2Ω	
	Pin 3 - 8	28.2 ± 2Ω	

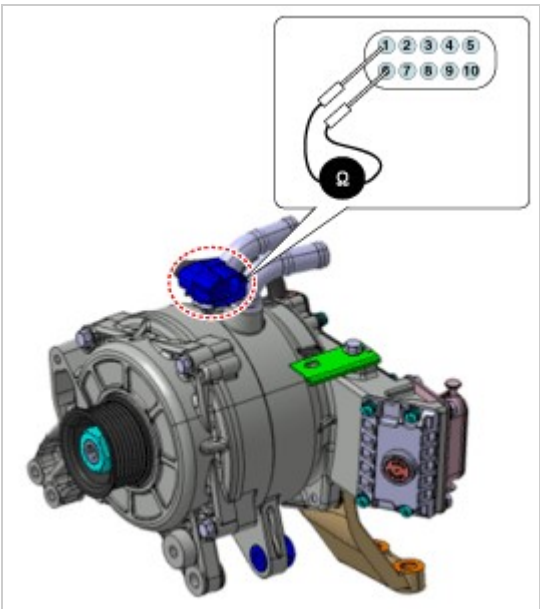

2. If you need to replace the resolver sensor, replace the HSG assembly.
   (Refer to Hybrid Motor Assembly - "Hybrid Starter Generator".)

Removal

⚠ CAUTION

You need to perform resolver compensation whenever the engine, HPCU (inverter), drive motor, or starter generator (HSG) is replaced, removed, or reinstalled.

Perform compensation according to the GDS motor/HSG resolver compensation procedure shown below.

GDS Motor / HSG Resolver Compensation Procedure

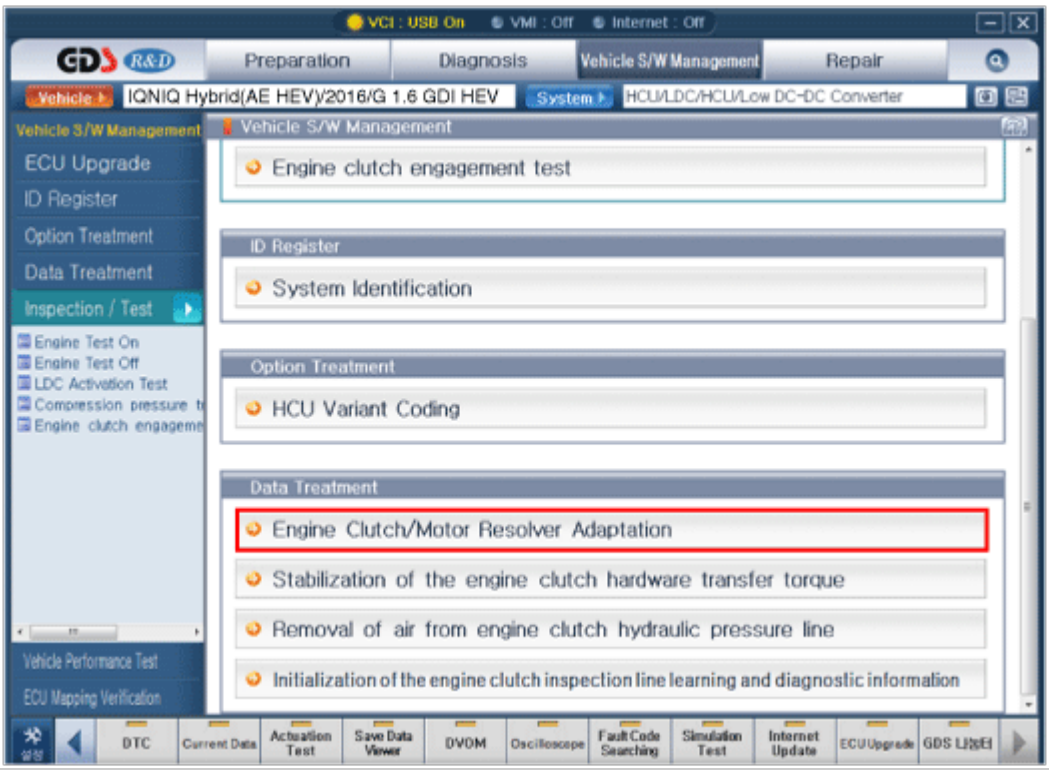

Hybrid Motor System

Description

- Motor temperature affects the motor power significantly.
- If the motor overheats, its main components, including permanent magnet, stator coil, etc., may be damaged, negatively affecting the operation of the drive motor.
  To prevent this, a temperature sensor is installed to determine the overheat of the motor and control the motor torque.

Hybrid Motor System

Circuit Diagram

Temperature sensor (hybrid drive motor)

[Circuit diagram]

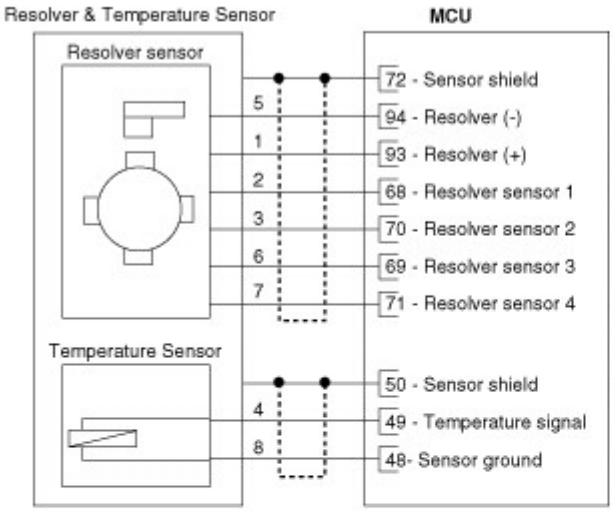

[Connection information]

Terminal	Connecting area	Function
1	MCU (93)	Resolver (+)
2	MCU (68)	Resolver sensor 1
3	MCU (70)	Resolver sensor 2
4	MCU (49)	Temperature signal
5	MCU (94)	Resolver (-)
6	MCU (69)	Resolver sensor 3
7	MCU (71)	Resolver sensor 4
8	MCU (48)	Temperature sensor ground

[Harness connector]

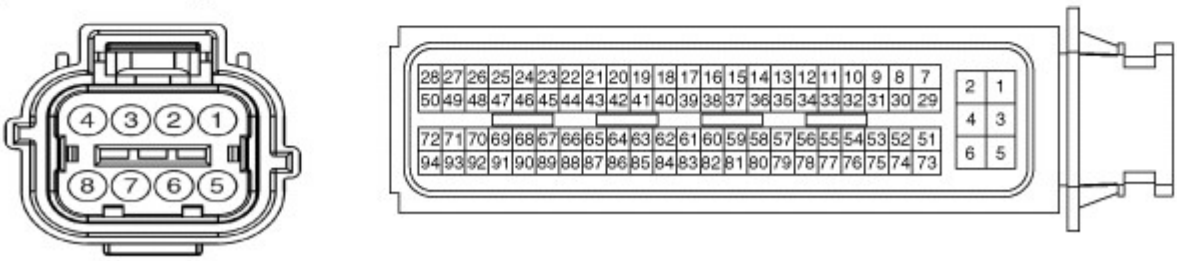

Resolver & temperature sensor

MCU

Resolver sensor (HSG)

[Circuit diagram]

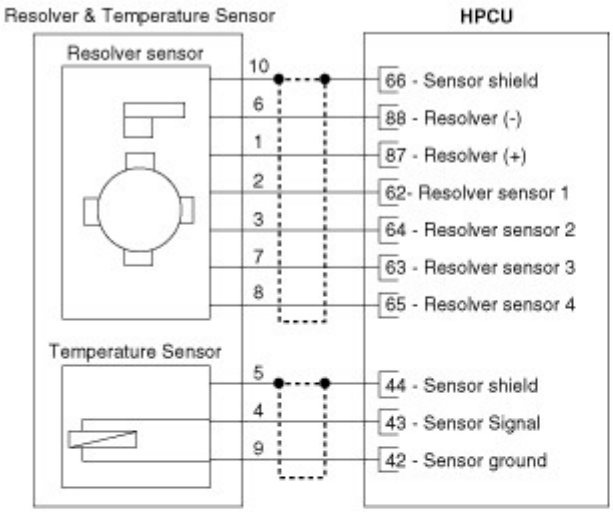

[Connection information]

Terminal	Connecting area	Function
1	HPCU (87)	Resolver sensor(+)
2	HPCU (62)	Resolver sensor 1
3	HPCU (64)	Resolver sensor 2
4	HPCU (43)	Temperature signal
5	HPCU (44)	Temperature shield
6	HPCU (88)	Resolver sensor (-)
7	HPCU (63)	Resolver sensor 3
8	HPCU (65)	Resolver sensor 4
9	HPCU (42)	Temperature sensor ground
10	HPCU (66)	Resolver sensor shield

[Harness connector]

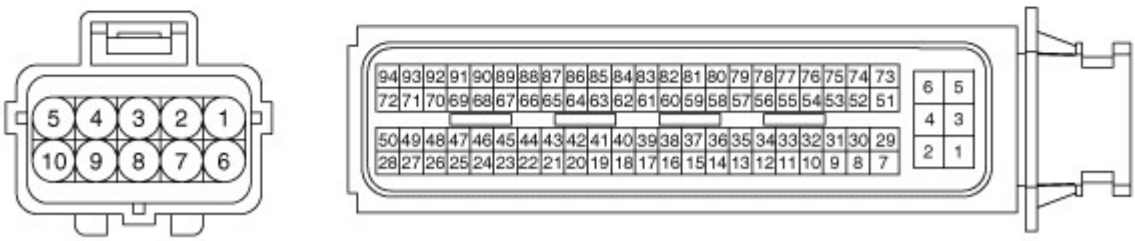

Resolver & temperature sensor

HPCU

Inspection

1. Check the temperature sensor resistance.
   [Hybrid drive motor]
   Measuring equipment : Multimeter

Category	Inspection area	Inspection criteria	Remarks
Resistance (Temperature sensor)	Pin 4 - 8	8kΩ (30°C / 86°F) - 20kΩ (10°C / 50°F)	10 - 30°C / 50 - 86°F

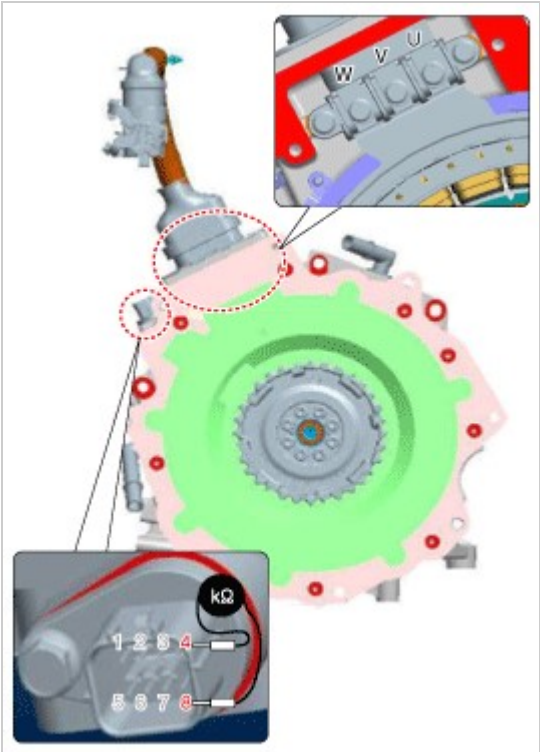

   [Hybrid starter generator (HSG)]
   Measuring equipment : Multimeter

Category	Inspection area	Inspection criteria	Remarks
Resistance (Temperature sensor)	Pin 4 - 9	126.8 kΩ	Based on ambient temperature (20°C)

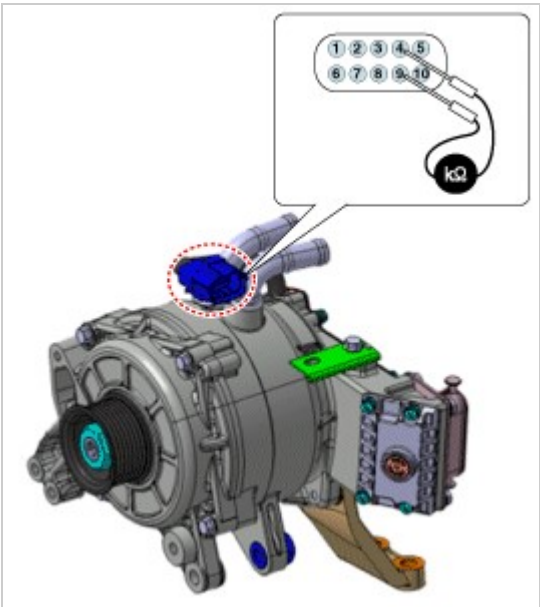

2. If you need to replace the temperature sensor, replace the HSG assembly.
   (Refer to Hybrid Motor Assembly - "Hybrid Starter Generator".)

Hybrid Motor System

Description

- Various devices containing semiconductor are used in HPCU.
  And heat is generated when the HPCU operates.

- These devices are connected to the high voltage directly and cause heat hotter than the electrical devices of an internal combustion engine.
- Overheat reduces the efficiency of control devices, hindering operational control.
  Also, the semiconductor elements may melt under excessive heat (The device may remain constantly turned on.)
  Such overheat may become the cause of vehicle malfunction.

Hybrid Motor Cooling System Circuit

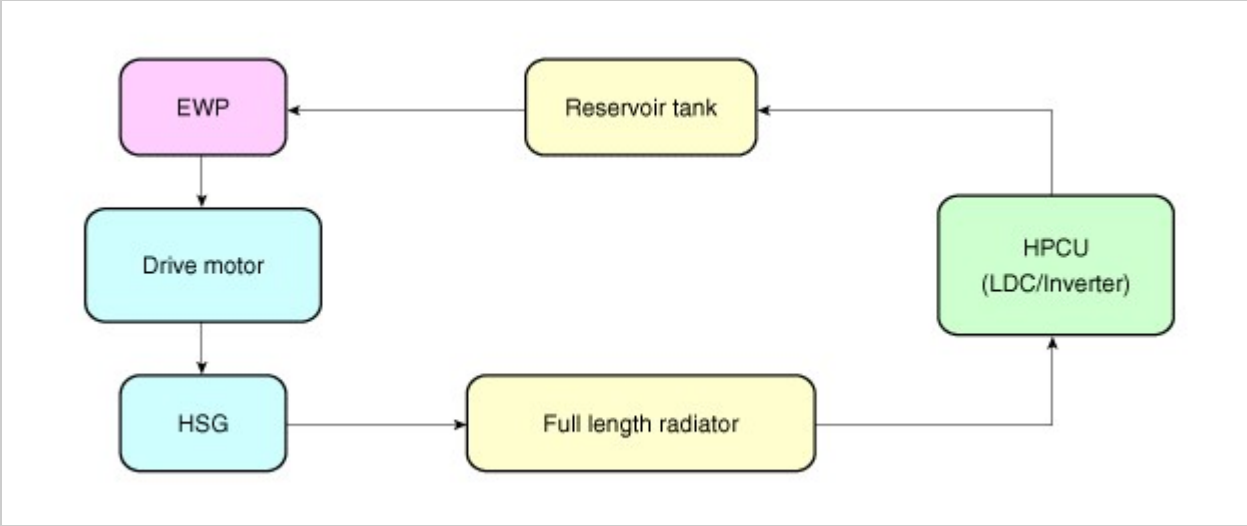

Hybrid Motor System

Specifications

Cooling system

Coolant	Specified coolant	LLC - 10
	Quantity	Approx. 3.2L (0.85 US gal, 3.38 US qt, 2.82 Imp qt.)

Hybrid Motor System

Description

- Function : It circulates the coolant for the hybrid system (HPCU, drive motor, and HSG).
- Operating Principles: When the coolant temperature exceeds the limit set in the MCU in the hybrid system, the motor control unit (MCU) sends a command to the electric water pump (EWP) through the CAN communication to operate the EWP.
  EWP then sends its operation status to MCU through the CAN communication.

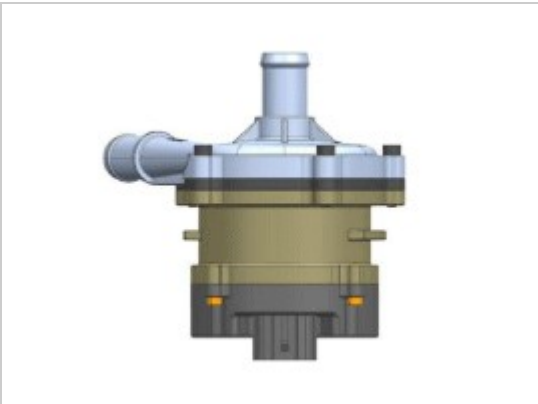

Hybrid Motor System

Component location

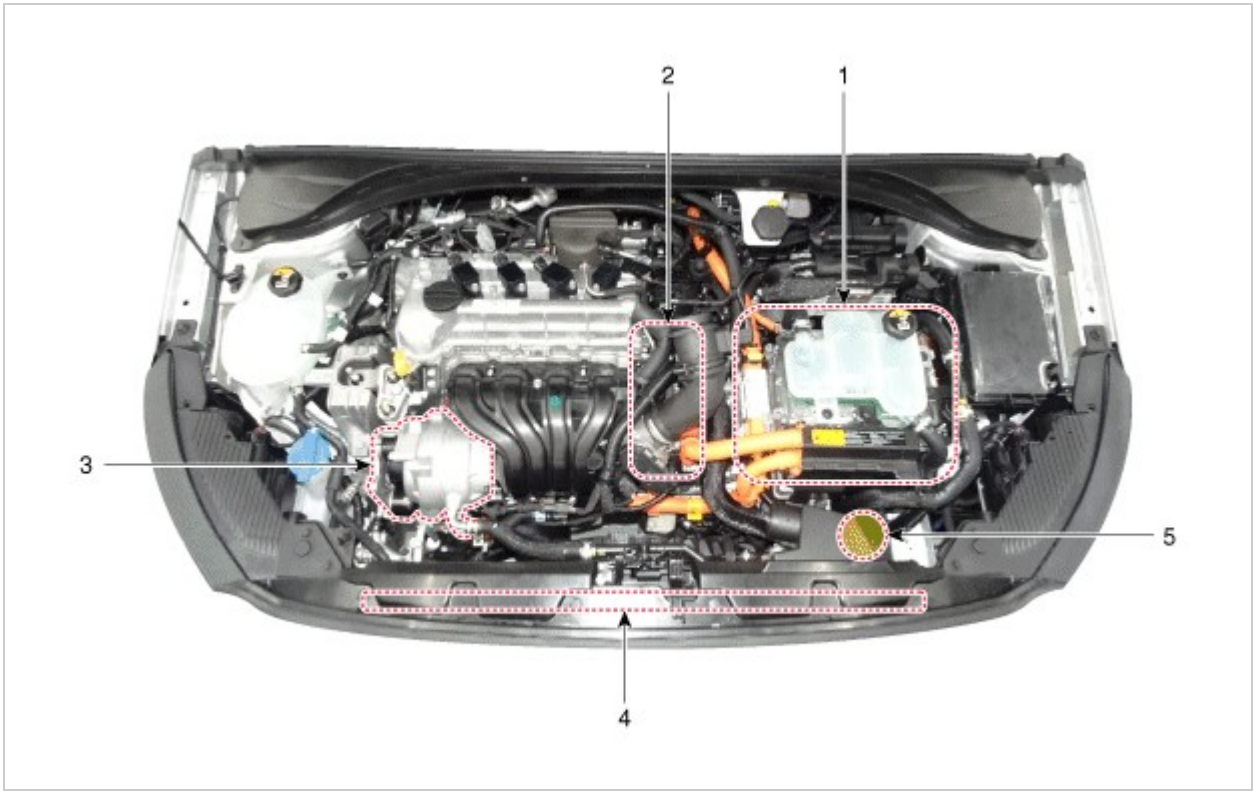

1. HPCU (Hybrid Power Control Unit) (LDC+MCU+HCU+Reservoir)
2. Hybrid drive motor
3. Hybrid starter generator (HSG)
4. Electrical radiator
5. Electric water pump (EWP)

Hybrid Motor System

Removal

1. Remove the 12 V battery (-) cable.
2. Remove the undercover.
   (Refer to Engine Mechanical System - "Engine Room Undercover".)
3. Drain the coolant from the hybrid cooling system.
   (Refer to Hybrid Motor Cooling System - "Coolant".)
4. Disconnect the hose (A) from the reservoir tank.

5. Disconnect the hose (A).

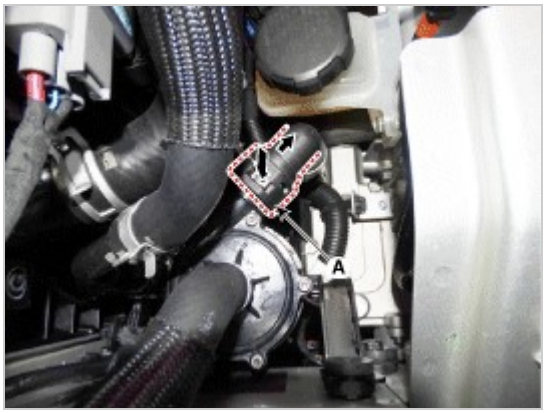

6. Unscrew the mounting bolt (A).

Tightening torque:
9.8 - 11.8N.m (1.0 - 1.2 kgf.m, 7.2 - 8.7 lb-ft)

7. After disconnecting the connector (A), remove the electric water pump (EWP).

Installation

1. To install, reverse the removal procedure.

CAUTION

- Be careful not to cause any damage on the hose when tightening the clamp.
- Mount the clamp tightening part in the designated direction so that interference does not occur with the adjacent parts.
- Fill the coolant in the hybrid cooling system and use the GDS to perform air bleeding.
  (Refer to Hybrid Motor Cooling System - "Coolant".)
- Check for the leakage in the hose connections while the engine is running.

Changing the Coolant and Performing Air Bleeding

WARNING

Never remove the cap while the engine is hot. When you remove the cap from the reservoir, hot coolant may spew out due to the high pressure, causing serious injury.

CAUTION

When you pour the coolant, be sure to close the relay box cover. Also, make sure that you don"t spill the coolant on electrical components or the paint on the vehicle. If you spilled it, wipe it out immediately.

1. Remove the reservoir cap (A) to drain the coolant quickly.

2. Remove the undercover.
   (Refer to Engine Mechanical System - "Engine Room Undercover".)
3. Loosen the inverter radiator drain plug (A) and drain the coolant.

4. Tighten the inverter radiator drain plug again.
5. Drain the coolant from the reservoir and clean the tank.
6. Fill the radiator with water through the reservoir cap and mount the radiator cap.

NOTICE

Slowly inject the coolant so that the air inside can get out easily.
Press the upper / lower hoses on the radiator so that the air can get out easily.

7. Operate the electric water pump (EWP) using the GDS in the IG ON state.

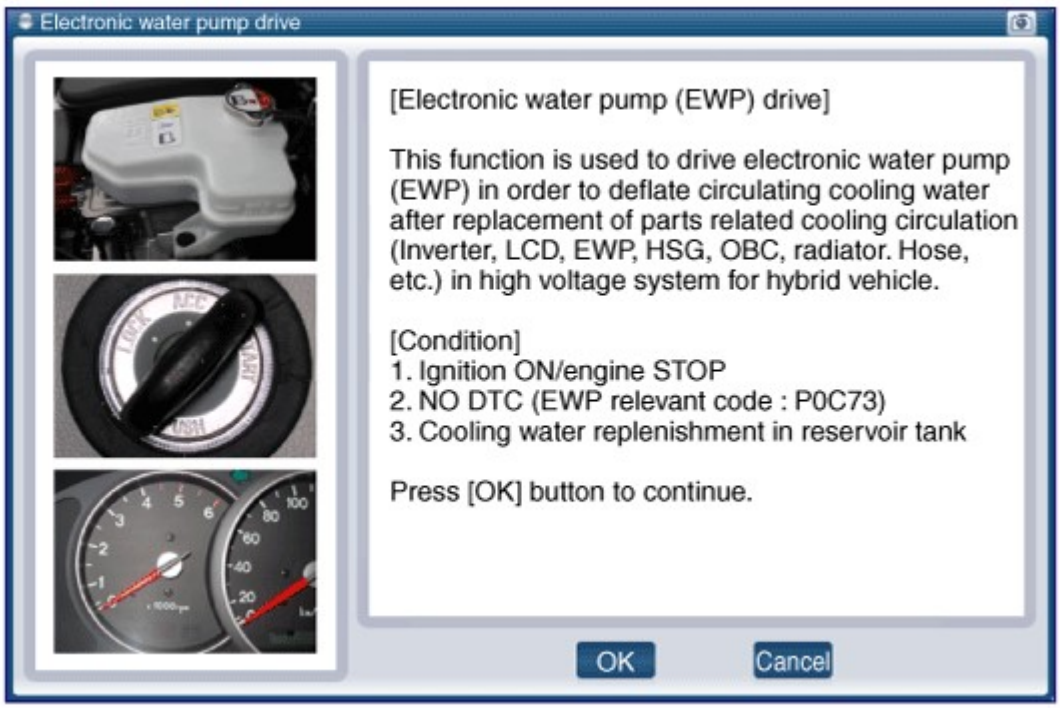

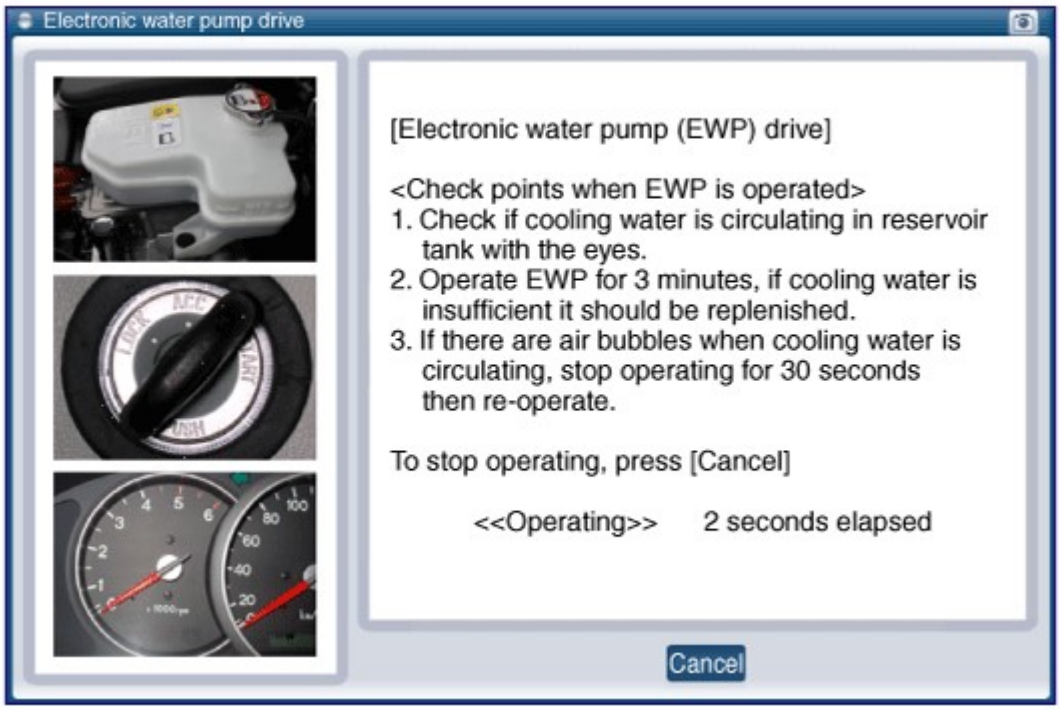

8. Repeat the steps 1 - 7 until the drained water becomes clear.
9. Pour the mixture of antifreeze and water (45 - 50%) into the radiator through the reservoir cap.
   At this time, press the upper / lower hoses on the radiator so that the air can get out easily.

NOTICE

- Be sure to use the genuine antifreeze/coolant.
- Maintain the concentration of antifreeze to at least 45% to prevent corrosion.
  If the concentration of antifreeze is less than 45%, there is a possibility of corrosion or freezing.
- If the concentration of antifreeze is more than 60%, the cooling efficiency may decrease. So, it is not recommended.
- Do not mix antifreeze/coolant from different manufacturers.
- Do not add rust inhibitor to the coolant.

10. Operate the EWP using the GDS while IG ON.

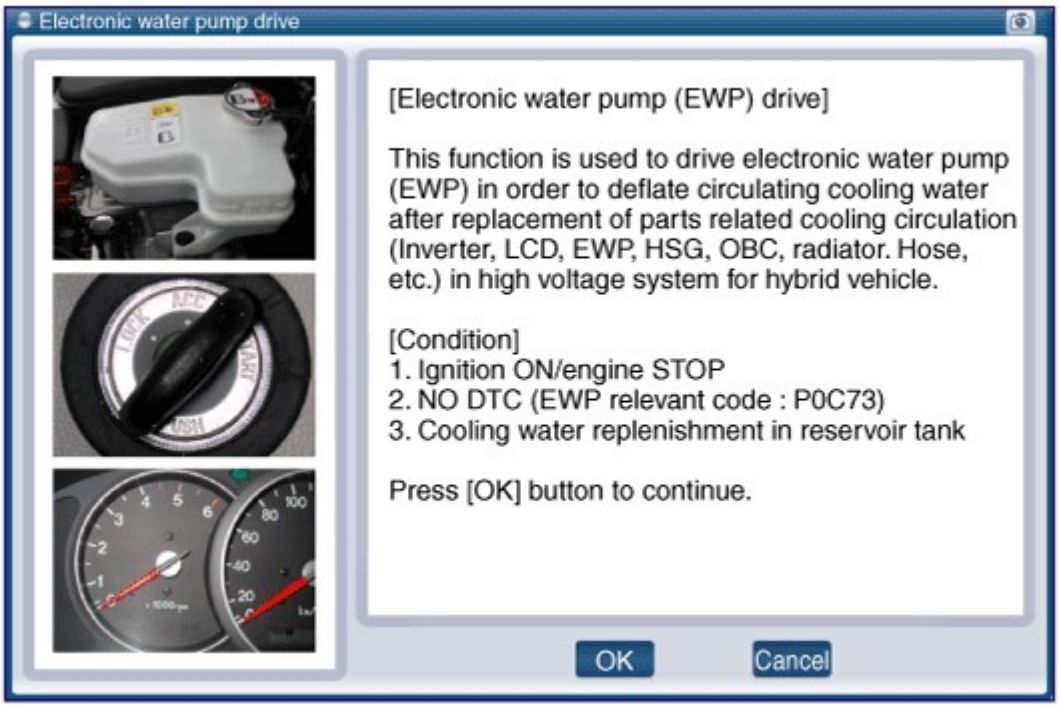

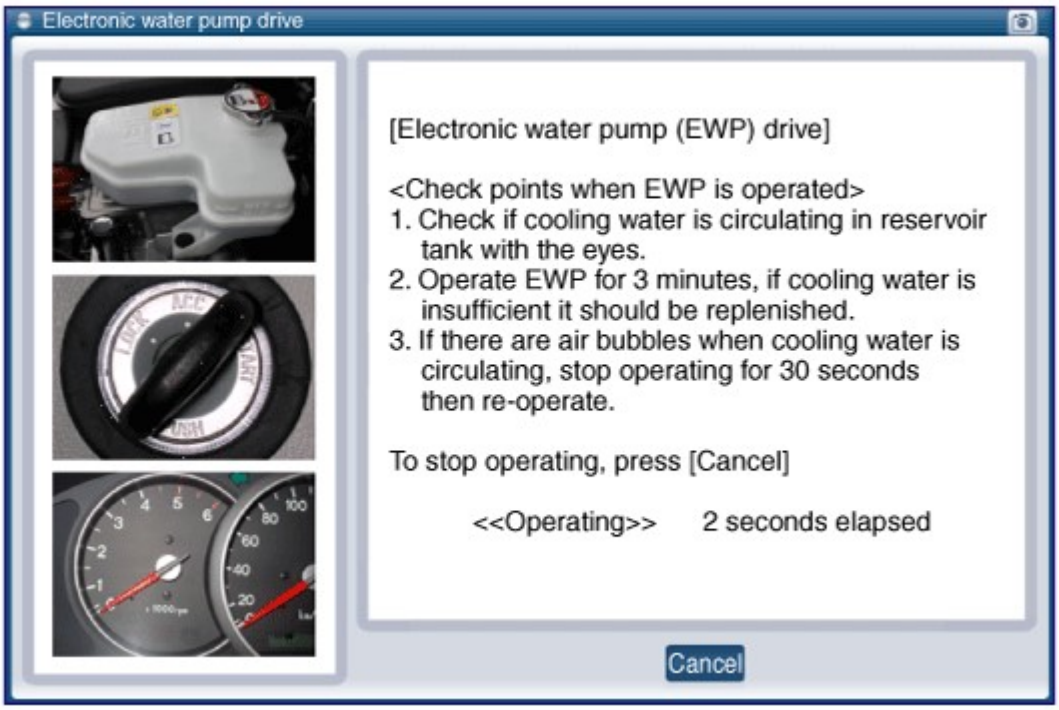

11. Once the EWP operates and circulates the coolant, fill the coolant to a level between MAX and MIN.

> **NOTICE**
> If you do not fill the coolant sufficiently for approx. 5 seconds, EWP stops for 15 seconds due to the EWP protection function. If you fill the coolant sufficiently, the EWP operates again.

12. If the operating sound of the EWP becomes smaller and no air bubble is seen in the reservoir, stop the air bleeding.

> **NOTICE**
> Once the air bleeding is over, be sure to check if air bubble is present inside the reservoir while the EWP is operating.
> If you cannot see the coolant flow or if you can see air bubbles, repeat the steps 9 - 12.

13. Stop the EWP and fill the coolant to the MAX level and mount the reservoir cap.

Hybrid Motor System

Component location

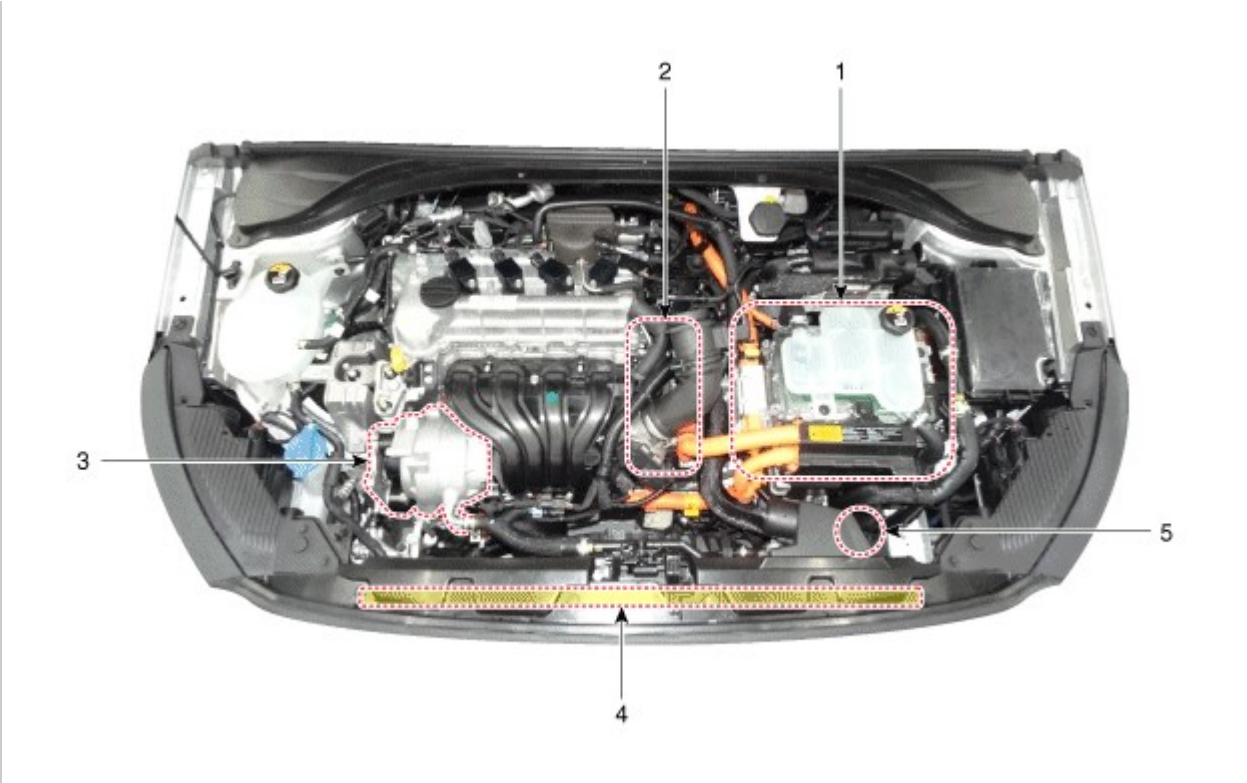

1. HPCU (Hybrid Power Control Unit) (LDC+MCU+HCU+Reservoir)
2. Hybrid drive motor
3. Hybrid starter generator (HSG)
4. Electrical radiator
5. Electric water pump (EWP)

Removal

1. Remove the 12 V battery (-) cable.
2. Remove the undercover.
   (Refer to Engine Mechanical System - "Engine Room Undercover".)
3. Drain the coolant from the hybrid cooling system.
   (refer to Hybrid Motor Cooling System - "Coolant".)
4. Remove the engine radiator.
   (Refer to Engine Mechanical System - "Radiator".)
5. Remove the front bumper.
   (Refer to Body - "Front Bumper".)
6. Use the recovery / reproduction/charging device to recover the coolant.
   (Refer to Heater and Air Conditioner-"Maintenance Procedure".)
7. Remove the hoses (A) and (B) from the electric radiator.

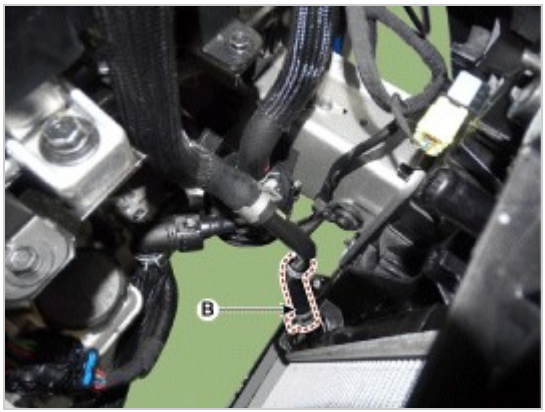

NOTICE

- Be careful not to cause any damage on the hose when tightening the clamp.
- Mount the clamp tightening part in the designated direction so that interference does not occur with the adjacent parts.
- After mounting the reservoir, check for the leakage in the hose connections while the engine is running.

8. Remove the coolant line (A) and (B).
9. Unscrew the condenser fixing bolt (C).

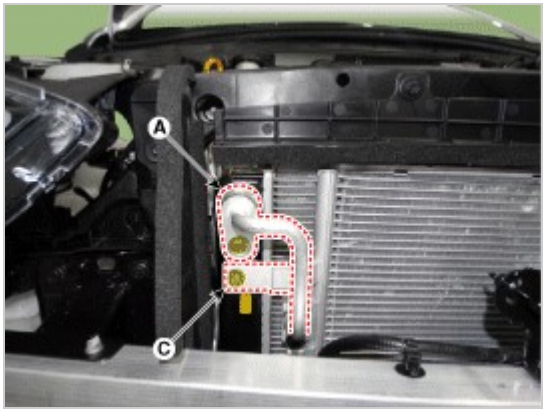

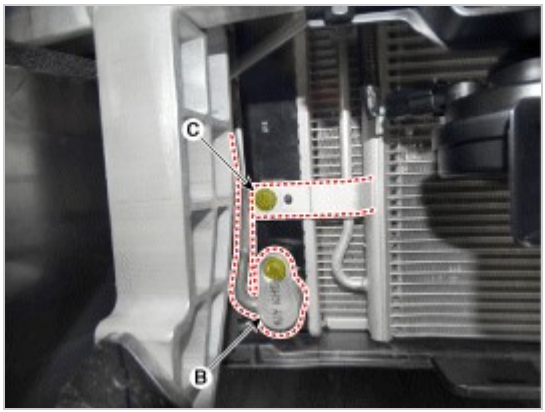

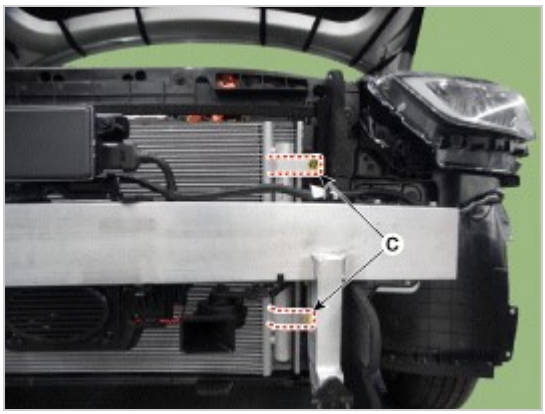

NOTICE

- While removing the line, mount the plug or cap to protect the system from humidity and dust.
- Replace the O-ring (A) with a new one when mounting the coolant line.

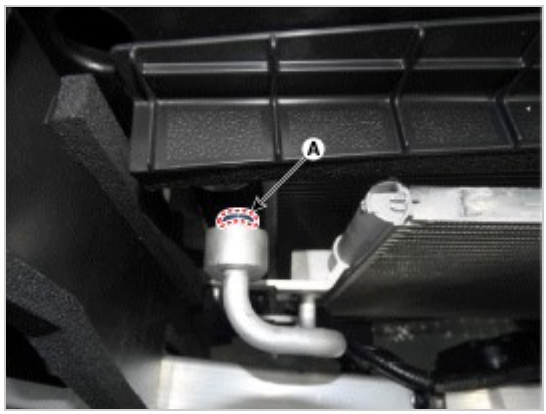

10. Remove the electric radiator (A).

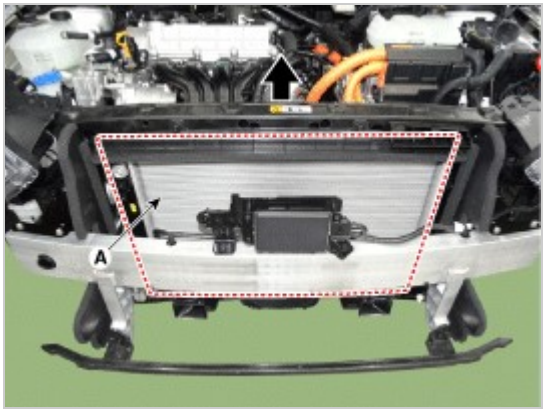

Installation

1. To install, reverse the removal procedure.

Hybrid Motor System

Component location

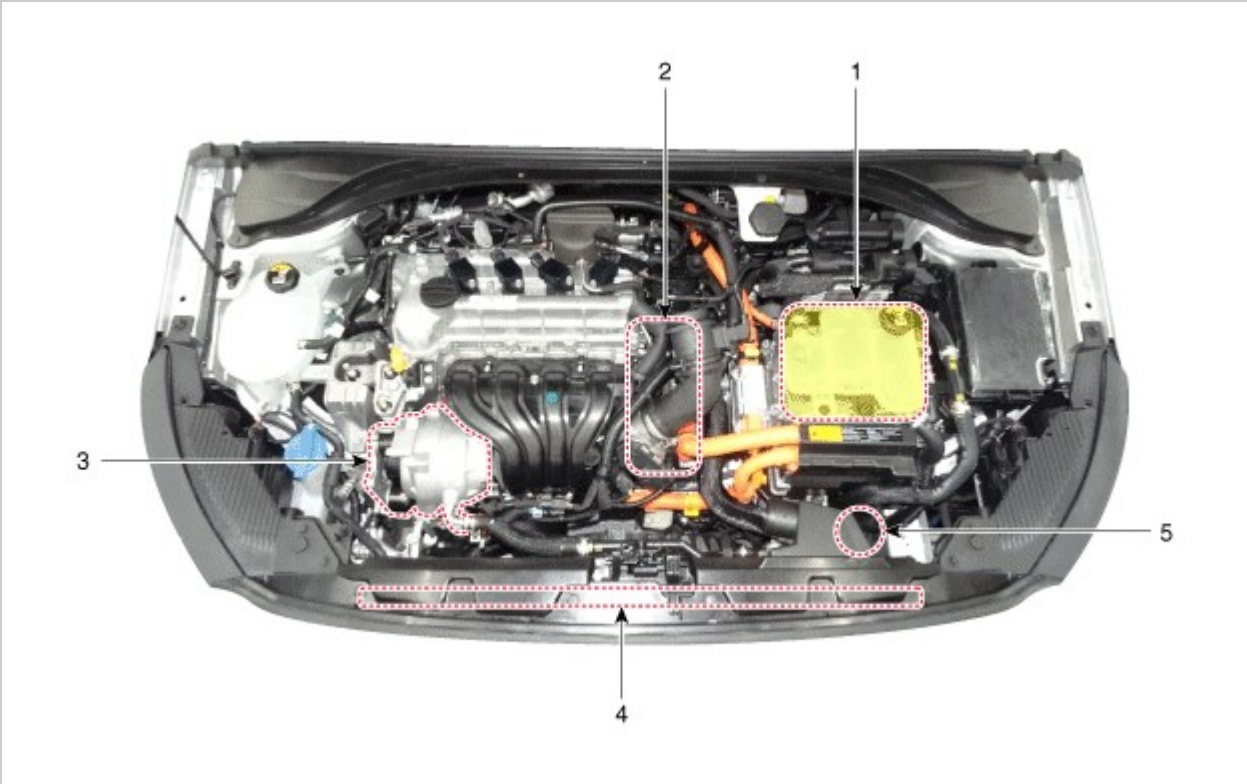

1. Reservoir
2. Hybrid drive motor
3. Hybrid starter generator (HSG)
4. Electrical radiator
5. Electric water pump (EWP)

Hybrid Motor System

Inspection

Inverter Reservoir Cap Test

1. Remove the reservoir cap and mount it on the pressure tester.

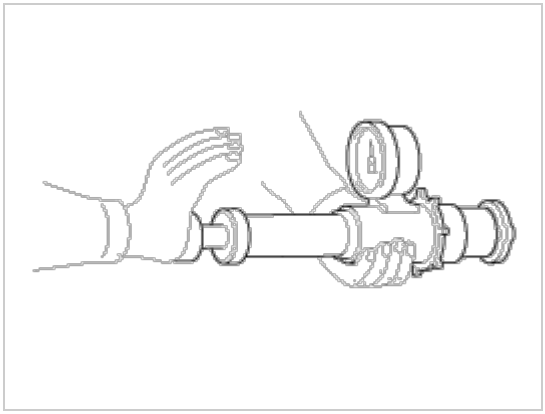

2. Apply pressure of 93.16 - 122.58 kPa (0.95 - 1.25 kgf/cm², 13.51 - 17.78 psi).
3. Check if the pressure decreases.
4. If the pressure decreases, replace the cap.

Radiator Leakage Test

1. Wait until the engine cools down. Remove the inverter reservoir cap carefully. Fill the coolant in the reservoir and mount the reservoir on the pressure tester.
2. Mount the reservoir on the pressure tester and apply pressure of 93.16 - 122.58 kPa (0.95 - 1.25 kgf/cm², 13.51 - 17.78 psi)..

3. Check if the coolant leaks or the pressure decreases.
4. Remove the tester and mount the inverter reservoir cap.

Removal

1. Remove the undercover.
   (Refer to Engine Mechanical System - "Engine Room Undercover".)
2. Drain the coolant from the hybrid cooling system.
   (Refer to Hybrid Motor Cooling System - "Coolant".)
3. Remove the air duct.
   (Refer to Engine Mechanical System - "Air Cleaner".)
4. Disconnect the reservoir input hose (A) from the output hose pipe assembly (B).
5. Unscrew the bolt to remove the reservoir (C).

   Tightening torque:
   3.9 - 5.9 N.m (0.4 - 0.6 kgf.m, 2.9 - 4.3lb-ft)

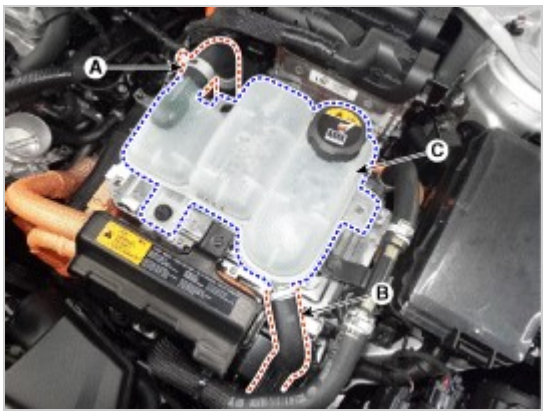

Installation

1. To install, reverse the removal procedure.

⚠ CAUTION

- •Be careful not to cause any damage on the hose when tightening the clamp.
- Mount the clamp tightening part in the designated direction so that interference does not occur with the adjacent parts.
- Fill the coolant in the hybrid cooling system and use the GDS to perform air bleeding.
  (Refer to Hybrid Motor Cooling System - "Coolant".)
- After mounting the reservoir, check for the leakage in the hose connections while the engine is running.