## Safety Precaution

**Precautions to take before servicing high voltage system**

**DANGER**

- Since hybrid vehicles contain a high voltage battery, if the high voltage system or vehicles are handled incorrectly, this might lead to a serious accidents like electric shock and electric leakage.

**WARNING**

- Be sure to shut off the high voltage by removing the safety plug before performing inspection or repairing the high voltage system.
  (Refer to "High Voltage Shut-off Procedures")
- The responsible worker keeps the removed safety plug to prevent the plug from being connected by mistake.
- Do not keep any metal objects (watch, ring etc.) while working on the high voltage system, which it can cause serious accidents like electric shock.
- Before beginning work on the high voltage system, the worker should wear personal protective equipment to prevent safety accidents.
  (Refer to "Personal Protective Equipment")
- Never allow workers who are not wear personal protective equipment to touch the high voltage system. High voltage components should be covered with an insulation sheet to prevent safety accidents.
- Use insulation tools when working on the high voltage system.
- Put the removed high voltage components on the insulation mat.

**Information**

- All the high voltage wiring and connectors are orange.
- A caution label for high voltage is attached to the high voltage components.
- High voltage components :
  High Voltage Battery Pack Assembly, Power Relay Assembly (PRA), BMS ECU, Hybrid Power Control Unit (HPCU), Hybrid Drive Motor, HSG, Electric A/C Compressor, Low DC/DC Converter (LDC), Power Cable, Electric Compressor etc.

**CAUTION**

- Inform of danger of high voltage by putting the "high voltage caution" on the vehicle as image below.

SAMPLE

DANGER

High Voltage : Do not touch during operation.

Person in charge : _____

Copy this page and put it after folding on the roof of the vehicle in service.

DANGER

High Voltage : Do not touch during operation.

Person in charge : _____

**Personal Protective Equipment**

| Name | Illustration | Description |
|---|---|---|
| Insulation glove | | Used when inspecting or working on the high voltage components<br>[Insulation performance : 1000V / 300A or above] |
| Insulation shoes | | Used when inspecting or working on the high voltage components |

| | | |
|---|---|---|
| Insulation clothes | | Used in the case below<br>• During Removal & installation or inspection of the high voltage battery terminals or wiring, which spark might happen.<br>• During working on the high voltage battery pack assembly. |
| Insulation helmet | 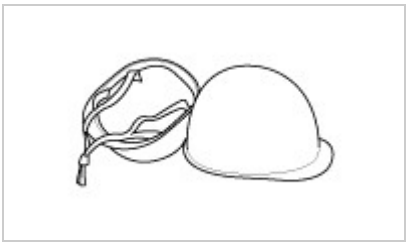 | |
| Safety glasses | | |
| Face shield | | |
| Insulation mat | 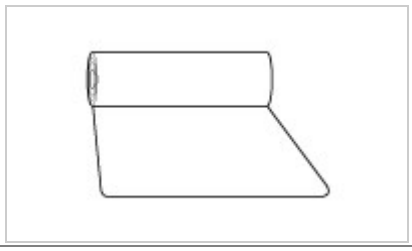 | Putting the removed high voltage components on the insulation mat to prevent safety accidents. |
| Insulation sheet | 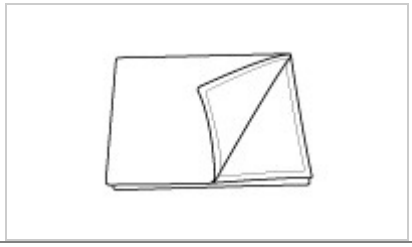 | Covering the high voltage components with insulation sheet to prevent people who don’t wear the personal protective equipment from safety accidents. |

**Precautions to take when handling power cable**

- Immediately insulate the high voltage terminal after reconnecting the terminal (use insulation tape).
- Tighten the high voltage terminal screw to spec torque.
- Be careful that (+) and (-) terminals do not come in contact when connecting or disconnecting power cable and busbar.

**Precautions to take when handling high voltage battery**

- When transporting high voltage battery, be sure to keep it flat and leveled. Failure to do so may decrease the battery performance and/or its life-span.
- High voltage battery"s performance may decrease if it is exposed to high temperature for a lengthy period. As a result, heat-treatment after painting must not exceed 70°C/ 30 minutes, or 80°C/ 20 minutes.

**Precautions in case of fire on high voltage battery system**

- If the fire occurs indoor, ventilate the area to let out hydrogen gas.
- ACB fire extinguisher is recommended for putting out the fire. (water may also be used).

**Precautions in case of high voltage battery gas or electrolyte leakage**

-

Turn OFF the Start button. Keep the Smart Key at least 2 meters away from the vehicle to prevent unintended engine start.

- Gas is hydrogen and alkaline vapor. If the leakage is indoor, ventilate the area immediately and evacuate to a safe location.
- If the leaked liquid comes in contact with skin, immediately neutralize the affected area with boric acid solution, then clean with tap water or saline solution.
- If the leaked vapor or liquid gets in the eye, immediately clean the affected eye with water then get medical attention.
- If the gas leakage is caused by high temperature, then do NOT use the battery until the high voltage battery fully cools down to room temperature.

**Precautions when handling the vehicle after an accident**

- Be sure to wear insulated gloves (or rubber gloves), protective goggles, insulated suite, and insulated boots.
- Do NOT touch bare cable under any condition.
  (Refer to "Precautions when handling power cable")
- In case of vehicle fire, put out the fire with ABC extinguisher. Do NOT use water (usage of large volume of water is okay, but small volume can worsen the situation).
- If more than half of the vehicle is submerged, then do NOT go near the Safety Switch or other high voltage related components. If such a component must be accessed, then move the vehicle to the safe location first before handling the component.
- Gas is hydrogen and alkaline vapor. If the leakage is indoor, ventilate the area immediately and evacuate to a safe location.
- If the leaked liquid comes in contact with skin, immediately neutralize the affected area with boric acid solution, then clean with tap water or saline solution.
- Refer to "High voltage cut-off procedure" if the high voltage needs to be cut off.

**Preparations when servicing the accident vehicle**

- Be sure to wear insulated gloves (or rubber gloves), protective goggles, insulated suite, and insulated boots.
- Boric Acid Power or Solution
- ABC Extinguisher
- Towel for cleaning electrolyte
- Vinyl tape (for insulating terminal)
- Mega ohm tester (for checking high voltage)

**Precautions in case HEV is left unattended for a lengthy period**

- Turn OFF the Start button. Keep the Smart Key at least 2 meters away from the vehicle to prevent unintended engine start.
- We recommend that HEV is driven at least 1 time for over 30 minutes every 2 months to protect and manage the high voltage battery (inquire at relevant team in HMC).
- When inspecting or exchanging the auxiliary battery, check high voltage battery SOC reset related problems.

**Hybrid Vehicle Refrigerant Recovery / Charging Precautions**

- Since the electric compressor uses high-voltage, you should use POE oil which have high Volumetric Resistivity.
- Do not use the same A/C recovery / charging station as conventional belt-driven compressors.

**WARNING**

- If the POE oil of the system gets mixed with PAG oil, then dielectric breakdown due to decreased volumetric Resistivity can occur and inoperative A/C compressor may result, A/C compressor may not work



## High Voltage Shut-off Procedures

**WARNING**

- Be sure to read and follow the "General Safety Information and Caution" before doing any work related with the high voltage system. Failure to follow the safety instructions may result in serious electrical injuries.
- Be sure to read and follow the "High Voltage Shut-off Procedures" before doing any work related with the high voltage system. Failure to follow the safety instructions may result in serious electrical injuries.

**Information**

- High voltage components :
  High Voltage Battery Pack Assembly, Power Relay Assembly (PRA), BMS ECU, Hybrid Power Control Unit (HPCU), Hybrid Drive Motor, HSG, Electric A/C Compressor, Low DC/DC Converter (LDC), Power Cable, Electric Compressor etc.

1. Turn the ignition switch OFF and disconnect the auxiliary 12V battery negative (-) terminal.

2. Remove the safety plug cover (A).

3. Unfasten the hook (A) and then remove the safety plug (C) by pulling the lever (B) to the direction of arrow.

4. Wait for more than 5 minutes so that the capacitor in the high voltage system can be fully discharged.

5. Measure the voltage between the inverter terminals to check that the capacitor in the inverter is discharged completely.
   (1) Remove air cleaner assembly and air duct.
   (Refer to Engine Mechanical System - "Air Cleaner")

   (2) Disconnect the inverter power cable (A).

**Information**

- Disconnect the inverter power cable as the procedures below.

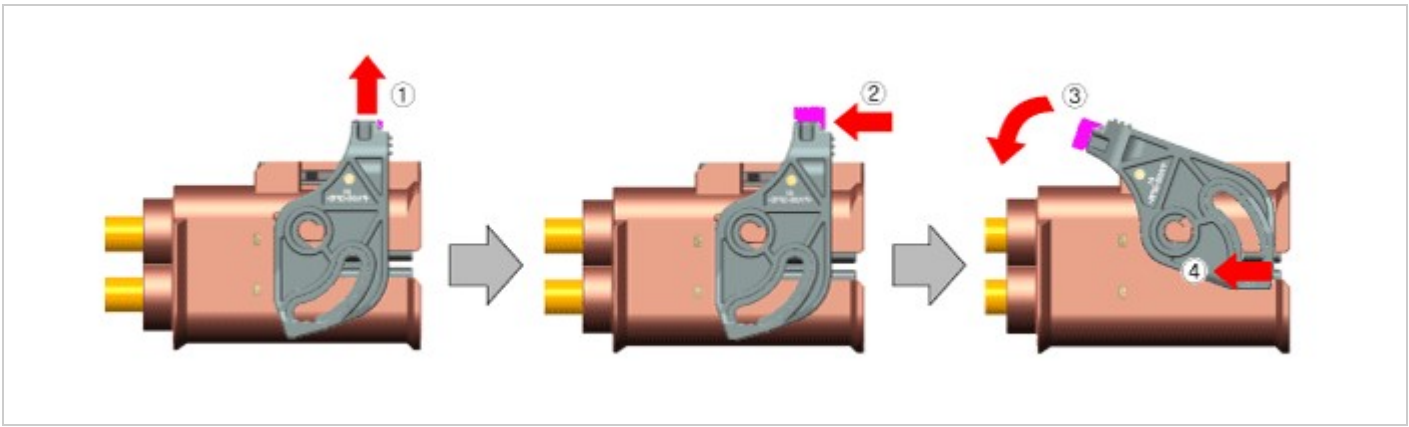

(3) Measure the voltage between the inverter (+) terminal and the inverter (-) terminal.

**Less than 30V : High voltage circuit properly shut**
**More than 30V : Fault on high voltage circuit**

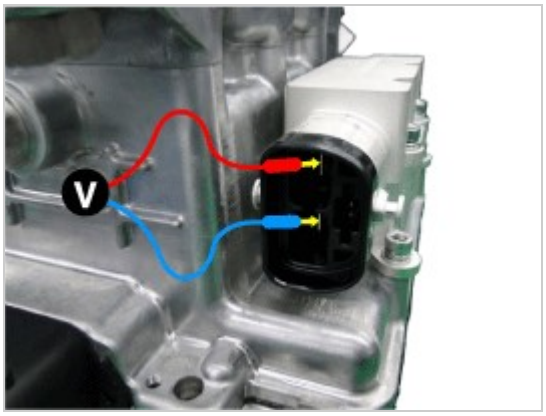


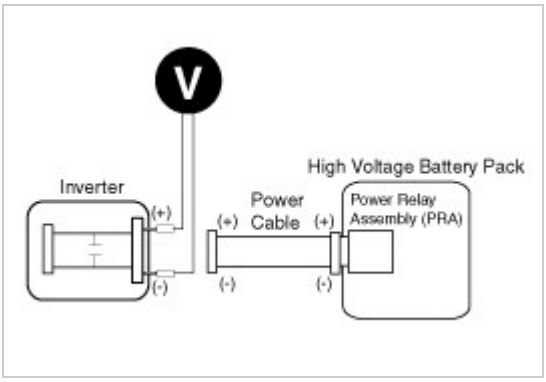


**WARNING**

- If measured more than 30V, check if the safety plug is removed completely.If measured more than 30V despite the safety plug is removed, there can be serious problems on the high voltage circuit. In this case, check DTC and never touch the high voltage system circuits.

**Heating, Ventilation and Air Conditioning**

## Specification

### Air Conditioner

| Item | | Specification |
|---|---|---|
| Compressor | Type | HES20 (Electric Scroll) |
| | Communication type | CAN communication |
| | Oil type & Capacity | POE Oil, 130 ± 10cc (4.58 ± 0.35oz.) |
| | Motor type | BLDC |
| | Rated voltage | 240V |
| | Operation voltage | 160 ~ 275V |
| Expansion valve | Type | Block type |
| Refrigerant | Type | R - 134a |
| | Capacity | 600 ± 25 g (21.2 ± 0.88 oz.) |

### Blower Unit

| Item | | Specification |
|---|---|---|
| Fresh and recirculation | Operating method | Actuator |
| Blower | Type | Sirocco pan |
| | Speed step | Auto + 8 speed (Automatic), 1 - 4 speed (Manual) |
| | Speed control | Power mosfet (Automatic), Resistor (Manual) |
| Air filter | Type | Particle filter |

### Heater and Evaporator Unit

| Item | | Specification |
|---|---|---|
| Heater | Type | Fin & Tube type |

| | | | | |
|---|---|---|---|---|
| Evaporator | Type | | Tube - Fin 1Way | |
| | Mode operating method | | Actuator | |
| | Temperature operating method | | Actuator | |
| | Temperature control type | | Evaporator temperature sensor | |
| | Blower singular | | A/C Output OFF Temperature | A/C Output ON Temperature |
| | Manual control | 1 - 2 speed | 1.5°C (34.7°F) | 3.0°C (37.4°F) |
| | | 3 - 4 speed | 0.6°C (33.1°F) | 2.1°C (35.8°F) |
| | Dual control | 1 - 4 speed | 1.5°C (34.7°F) | 3.0°C (37.4°F) |
| | | 5 - 6 speed | 1.0°C (33.8°F) | 2.5°C (36.5°F) |
| | | 7 - 8 speed | 0.6°C (33.1°F) | 2.1°C (35.8°F) |
| Manufacturer | HVCC (Halla Visteon Climate Control) | | | |

## Tightening Torques

| Items | N.m | kgf.m | lb-ft |
|---|---|---|---|
| Compressor | 20.0 - 32.95 | 2.04 - 3.36 | 14.75 - 24.30 |
| Condenser - Discharge hose | 8.8 - 13.7 | 0.9 - 1.4 | 6.5 - 10.1 |
| Condenser - Liquid tube | | | |
| Compressor - Discharge hose | 7.8 - 11.8 | 0.8 - 1.2 | 5.8 - 8.7 |
| Compressor - Suction hose | | | |
| Expansion valve - Evaporator | 8.8 - 13.7 | 0.9 - 1.4 | 6.5 - 10.1 |



## Troubleshooting

**Problem Symptoms Table**

Before replacing or repairing air conditioning components, first determine if the malfunction is due to the refrigerant charge, air flow or compressor.

Use the table below to help you find the cause of the problem. The numbers indicate the priority of the likely cause of the problem. Check each part in order. If necessary, replace these parts.

After correcting the malfunction, check the complete system to ensure that performance is satisfactory.

## Standard:

| Symptom | Suspected Area |
|---|---|
| No blower operation | Blower fuse |
| | Blower relay |
| | Blower motor |
| | Power mosfet |
| | Blower speed control switch |
| | Wire harness |
| No air temperature control | Engine coolant capacity |
| | Heater control assembly |
| No compressor operation | Refrigerant capacity |
| | A/C fuse |
| | Compressor |
| | A/C pressure transducer |
| | A/C switch |
| | Evaporator temperature sensor |
| | Wire harness |
| Vented air not cold | Refrigerant capacity |
| | Refrigerant pressure |
| | Drive belt |
| | Compressor |
| | A/C pressure transducer |
| | Evaporator temperature sensor |
| | A/C switch |
| | Heater control assembly |
| | Wire harness |
| Insufficient cooling | Refrigerant capacity |
| | Drive belt |
| | |

| | |
|---|---|
| | Compressor |
| | Condenser |
| | Expansion valve |
| | Evaporator |
| | Refrigerant lines |
| | A/C pressure transducer |
| | Heater control assembly |
| No engine idle-up when A/C switch ON | Engine ECM |
| | Wire harness |
| No air inlet control | Heater control assembly |
| No mode control | Heater control assembly |
| | Mode actuator |
| No cooling fan operation | Cooling fan fuse |
| | Fan motor |
| | Engine ECM |
| | Wire harness |



## Instructions

## When Handling Refrigerant

1. R-134a liquid refrigerant is highly volatile. A drop on the skin of your hand could result in localized frostbite. When handling the refrigerant, be sure to wear gloves.
2. It is standard practice to wear goggles or glasses to protect your eyes, and gloves to protect your hands. If refrigerant splashes into your eyes, wash them with clean water immediately.
3. The R-134a container is highly pressurized. Never leave it in a hot place, and check if storage temperature is below 52°C (126°F)
4. An electronic leak detector should be used to check the system for refrigerant leakage. Bear in mind that the R-134a, upon coming into contact with flame, produces phosgene, a highly toxic gas.
5. Use only recommended lubricant for R-134a systems. If lubricants other than the recommended one used, system failure may occur.
6. POE lubricant absorbs moisture from the atmosphere at a rapid rate, therefore the following precautions must be observed:
   – When removing refrigerant components from a vehicle, cap the components immediately to prevent entry of moisture.
   – When installing refrigerant components to a vehicle, do not remove the cap until just before connecting the components.
   – Complete the connection of all refrigerant tubes and hoses without delay to prevent the A/C system from taking on moisture.
   – Use the recommended lubricant from a sealed container only.
7. Do not use the same A/C recovery / charging station as conventional belt-driven compressors.
8. Since the electric compressor uses high-voltage, you should use POE oil which have high volumetric resistivity.

**WARNING**

- If the POE oil of the system gets mixed with PAG oil, then dielectric breakdown due to decreased volumetric resistivity can occur and inoperative A/C compressor may result, A/C compressor may not work.

9. If an accidental discharge in the system occurs, ventilate the work area before resume of service.

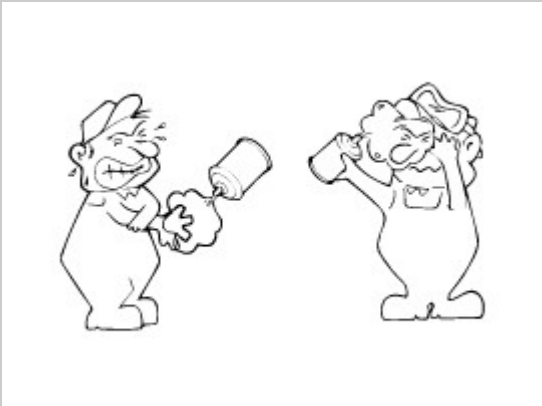

## When Replacing Parts on A/C System

1. Never open or loosen a connection before discharging the system.
2. Seal the open fittings of components with a cap or plug immediately to prevent intrusion of moisture or dust.

3. Do not remove the sealing caps from a replacement component until it is ready to be installed.
4. Before connecting an open fitting, always install a new sealing ring. Coat the fitting and seal with refrigerant oil before making the connection.

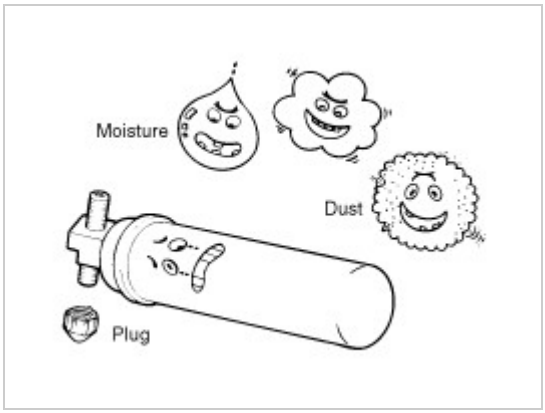


## When Installing Connecting Parts

## Flange With Guide Pin

Check the new O-ring for damage (use only the specified) and lubricate by using compressor oil. Tighten the nut to the specified torque.

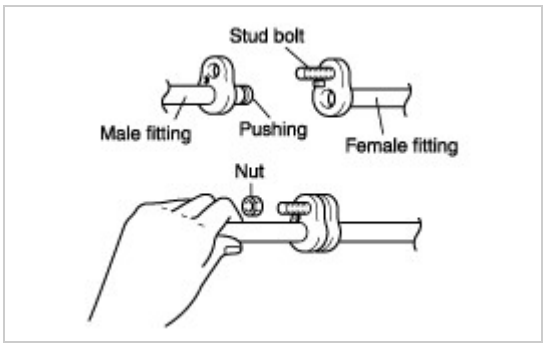


## Handling Tubing and Fittings

The internal parts of the refrigeration system will remain in a state of chemical stability as long as pure moisture-free refrigerant and refrigerant oil are used. Abnormal amounts of dirt, moisture or air can upset the chemical stability and cause problems or serious damage.

## The Following Precautions Must Be Observed

1. When it is necessary to open the refrigeration system, have everything you will need to service the system ready so the system will not be left open any longer than necessary.
2. Cap or plug all lines and fittings as soon as they are opened to prevent entrance of dirt and moisture.
3. All lines and components in parts stock should be capped or sealed until they are ready to be used.
4. Never attempt to rebind formed lines to fit. Use the correct line for the installation you are servicing.
5. All tools, including refrigerant dispensing manifold, gauge set manifold and test hoses, should be kept clean and dry.



## Refrigeration Cycle

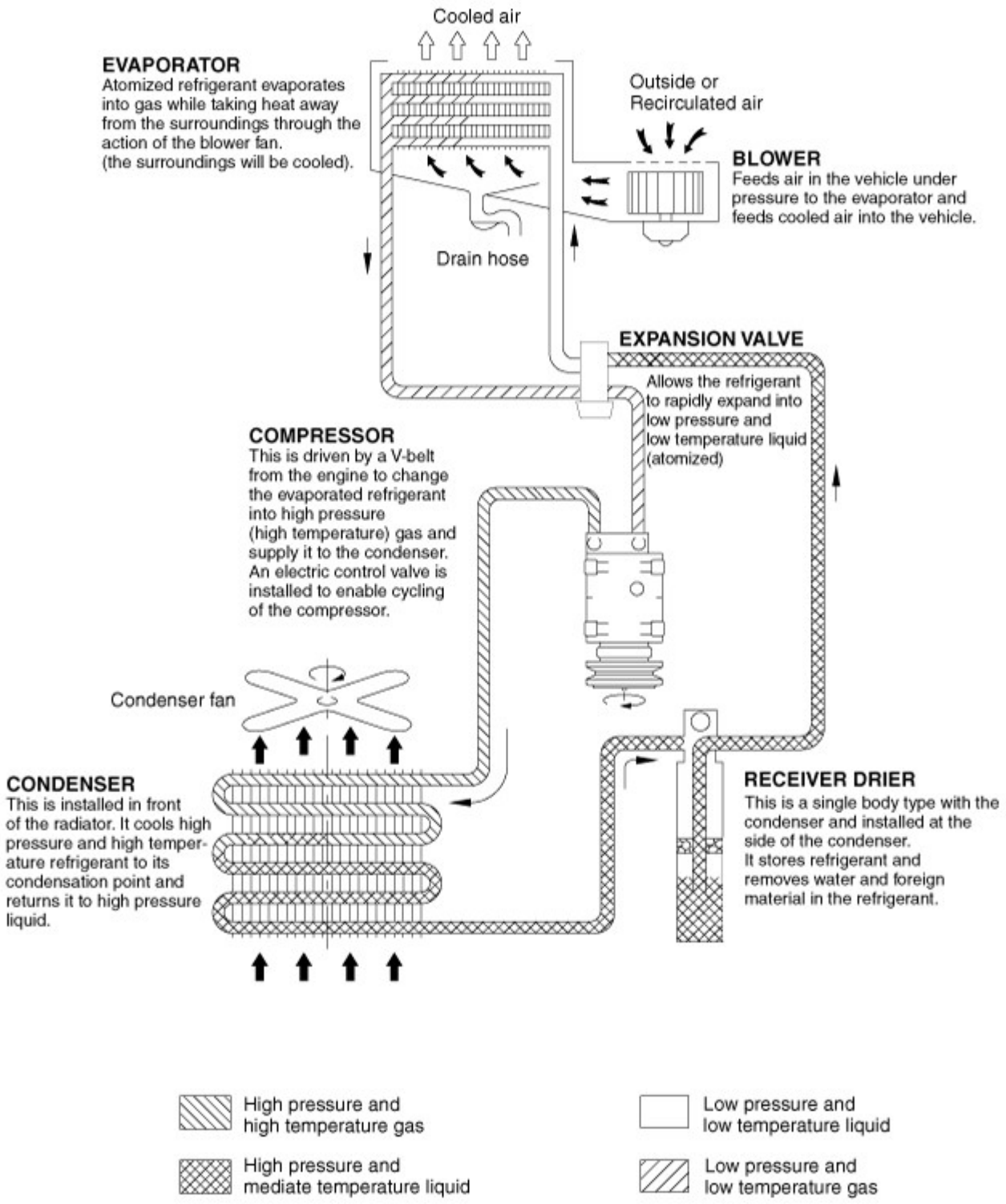




## Refrigerant System Service Basics

- Since the electric compressor uses high-voltage, you should use POE oil which have high volumetric resistivity.
- Do not use the same A/C recovery / charging station as conventional belt-driven compressors.

**⚠WARNING**

If the POE oil of the system gets mixed with PAG oil, then dielectric breakdown due to decreased volumetric resistivity can occur and inoperative A/C compressor may result, A/C compressor may not work.

## Refrigerant Recovery

Use only service equipment that is U.L-listed and is certified to meet the requirements of SAE J2210 to remove HFC-134a(R-134a) from the air conditioning system.

**⚠ CAUTION**

- Air conditioning refrigerant or lubricant vapor can irritate your eyes, nose, or throat.
- Be careful when connecting service equipment.
- Do not breathe refrigerant or vapor.

If accidental system discharge occurs, ventilate the work area before resume of service.

Additional health and safety information may be obtained from the refrigerant and lubricant manufacturers.

1. Connect a R-134a refrigerant
   Recovery/Recycling/Charging system to the high-pressure service port (B) and the low-pressure service port (A) as shown, following the equipment manufacturer"s instructions.

2. Measure the amount of refrigerant oil removed from the A/C system after the recovery process is completed. Be sure to install the same amount of new refrigerant oil back into the A/C system before charging.

## System Evacuation

Use only service equipment that is U.L-listed and is certified to meet the requirements of SAE J2210 to remove HFC-134a(R-134a) from the air conditioning system.

**⚠ CAUTION**

- Air conditioning refrigerant or lubricant vapor can irritate your eyes, nose, or throat.
- Be careful when connecting service equipment.
- Do not breathe refrigerant or vapor.

If accidental system discharge occurs, ventilate the work area before resume of service.

Additional health and safety information may be obtained from the refrigerant and lubricant manufacturers.

1. When an A/C system has been opened to the atmosphere, such as during installation or repair, it must be evacuated using a R-134a refrigerant Recovery/Recycling/Charging system. (If the system has been open for several days, the receiver/drier should be replaced, and the system should be evacuated for several hours.)
2. Connect a R-134a refrigerant Recovery/ Recycling/ Charging system (A) to the high-pressure service port (C) and the low-pressure service port (B) as shown, following the equipment manufacturer"s instructions.

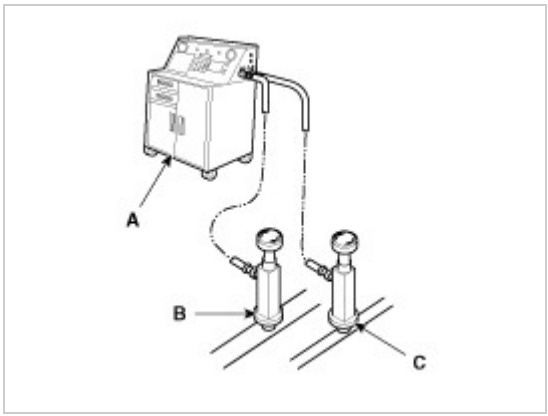


3. If the low-pressure does not reach more than 93.3 kPa (700 mmHg, 27.6 in.Hg) in 10 minutes, there is probably a leak in the system. Partially charge the system, and check for leaks (see Refrigerant Leak Test.)
4. Remove the low pressure valve from the low-pressure service port.

## System Charging

Use only service equipment that is U.L-listed and is certified to meet the requirements of SAE J2210 to remove HFC-134a (R-134a) from the air conditioning system.

**⚠ CAUTION**

- Air conditioning refrigerant or lubricant vapor can irritate your eyes, nose, or throat.
- Be careful when connecting service equipment.
- Do not breathe refrigerant or vapor.

If accidental system discharge occurs, ventilate the work area before resume of service.

Additional health and safety information may be obtained from the refrigerant and lubricant manufacturers.

1. Connect a R-134a refrigerant
   Recovery/Recycling/Charging system (A) to the high-pressure service port (C) as shown, following the equipment manufacturer"s instructions.

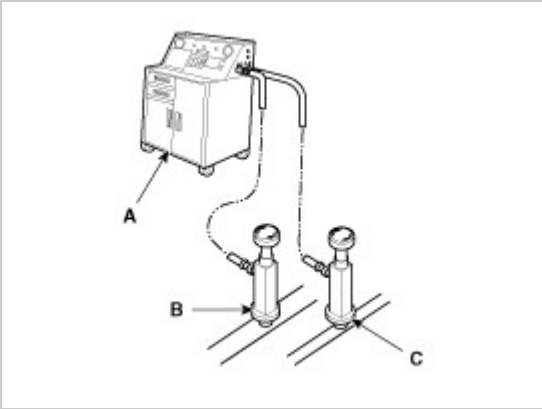


2. Add the same amount of new refrigerant oil to the system that was removed during recovery. Use only specified refrigerant oil. Charge the system with R-134a refrigerant. Do not overcharge the system the compressor will be damaged.

   **Capacity**: 600 ± 25 g (21.2 ± 0.88 oz.)

## Refrigerant Leak Test

Always conduct a leak test with an electronic leak detector whenever leakage or refrigerant is suspected and when conducting service operations which are accompanied by disassembly or loosening or connection fittings.

***NOTICE***

In order to use the leak detector properly, read the manual supplied by the manufacturer.

If a gas leak is detected, proceed as follows:

1. Check the torque on the connection fittings and, if too loose, tighten to the proper torque. Check for gas leakage with a leak detector (A).
2. If leakage continues even after the fitting has been tightened, discharge the refrigerant from the system, disconnect the fittings, and check their seating faces for damage. Always replace, even if the damage is slight.
3. Check the compressor oil and add oil if required.
4. Charge the system and recheck for gas leaks. If no leaks are found, evacuate and charge the system again.

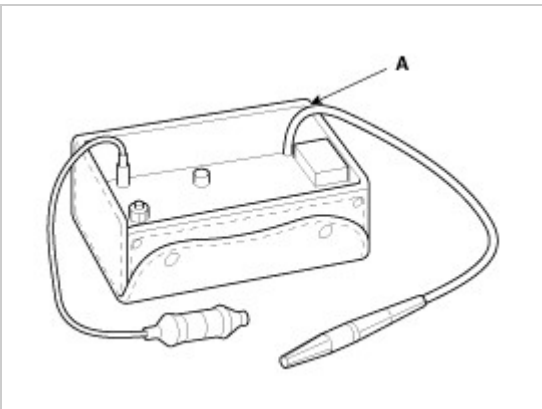




## Component Location Index

## Engine Room

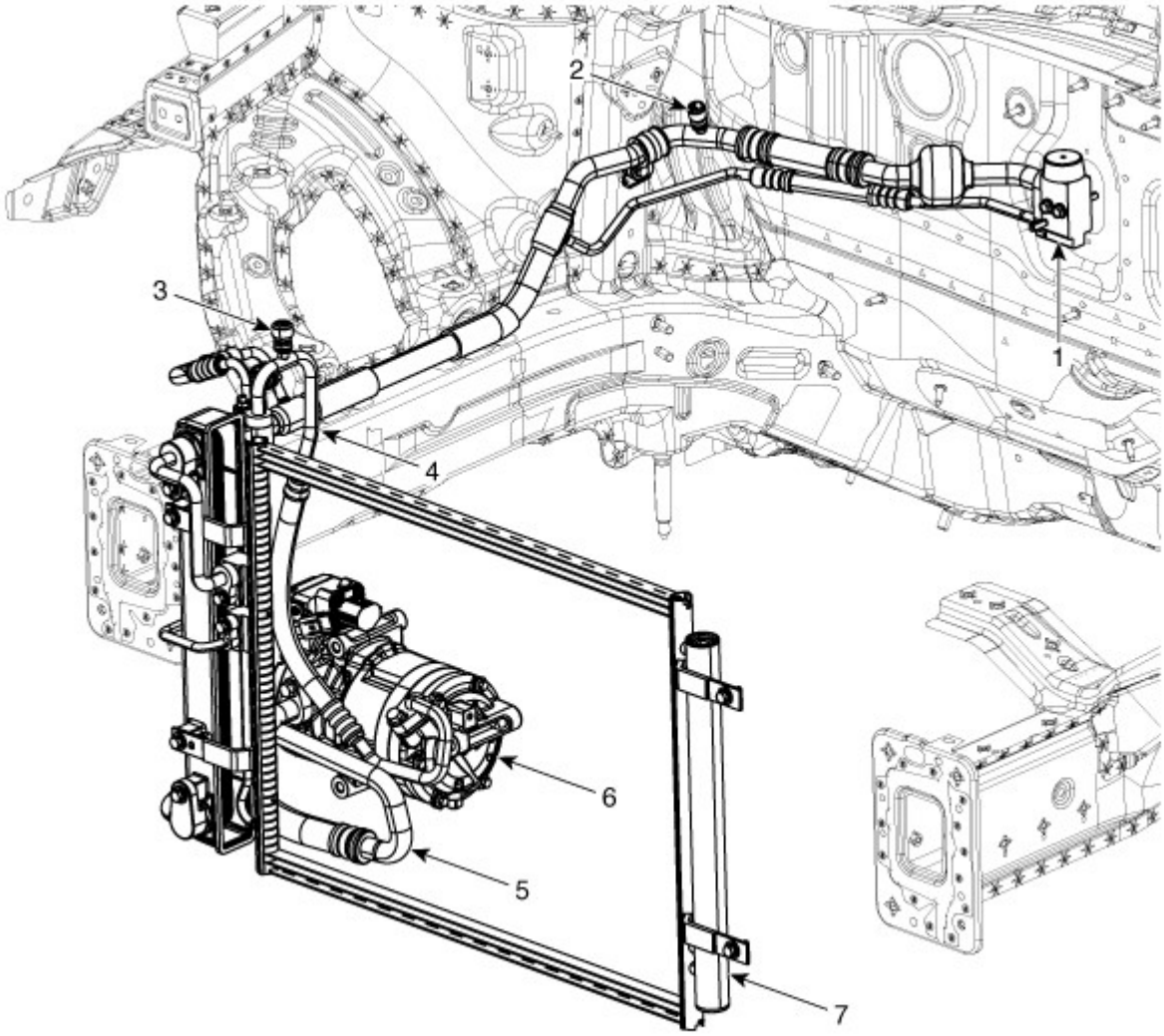


1. Expansion valve
2. Service port (Low pressure)
3. Service port (High pressure)
4. Discharge hose
5. Suction & Liquid tube assembly
6. Electric A/C compressor
7. Condenser

## [Interior]

1. Auto defogging sensor
2. Photo sensor
3. Heater & A/C control unit
4. Heater & Blower unit



## Oil Specification

1. The HFC-134a system requires synthetic (POE) compressor oil whereas the R-12 system requires mineral compressor oil. The two oils must never be mixed.
2. Compressor (POE) oil varies according to compressor model. Be sure to use oil specified for the model of compressor.

**WARNING**

- If the POE oil of the system gets mixed with PAG oil, then dielectric breakdown due to decreased volumetric resistivity can occur and inoperative A/C compressor may result, A/C compressor may not work.
- If the POE oil gets mixed with PAG oil, replace the compressor with new one and clean inside the A/C system (condenser, refrigerant line, evaporator and etc.).

## Handling of Oil

1. The oil should be free from moisture, dust, metal powder, etc.
2. Do not mix with other oil.
3. The water content in the oil increases when exposed to air. After use, seal oil from air immediately. (HFC-134a Compressor Oil absorbs moisture very easily.)
4. The compressor oil must be stored in steel containers, not in plastic containers.

## Compressor Oil Check

The oil used to lubricate the compressor circulates with the refrigerant.
Whenever replacing any component of the system or a large amount of gas leakage occurs, add oil to maintain the original amount of oil.

**Oil total volume in system**

POE OIL : 130±10g (4.58±0.35oz.)

## Oil Return Operation

There is close affinity between the oil and refrigerant.
During normal operation, part of the oil recirculates with the refrigerant in the system. When checking the amount of oil in the system, or replacing any component of the system, the compressor must run in advance for oil return operation. The procedure is as follows:

1. Open all the doors and engine hood.
2. Start the engine and air conditioning switch to "ON" and set the blower motor control knob at its highest position.
3. Stop the engine.



## Components Location

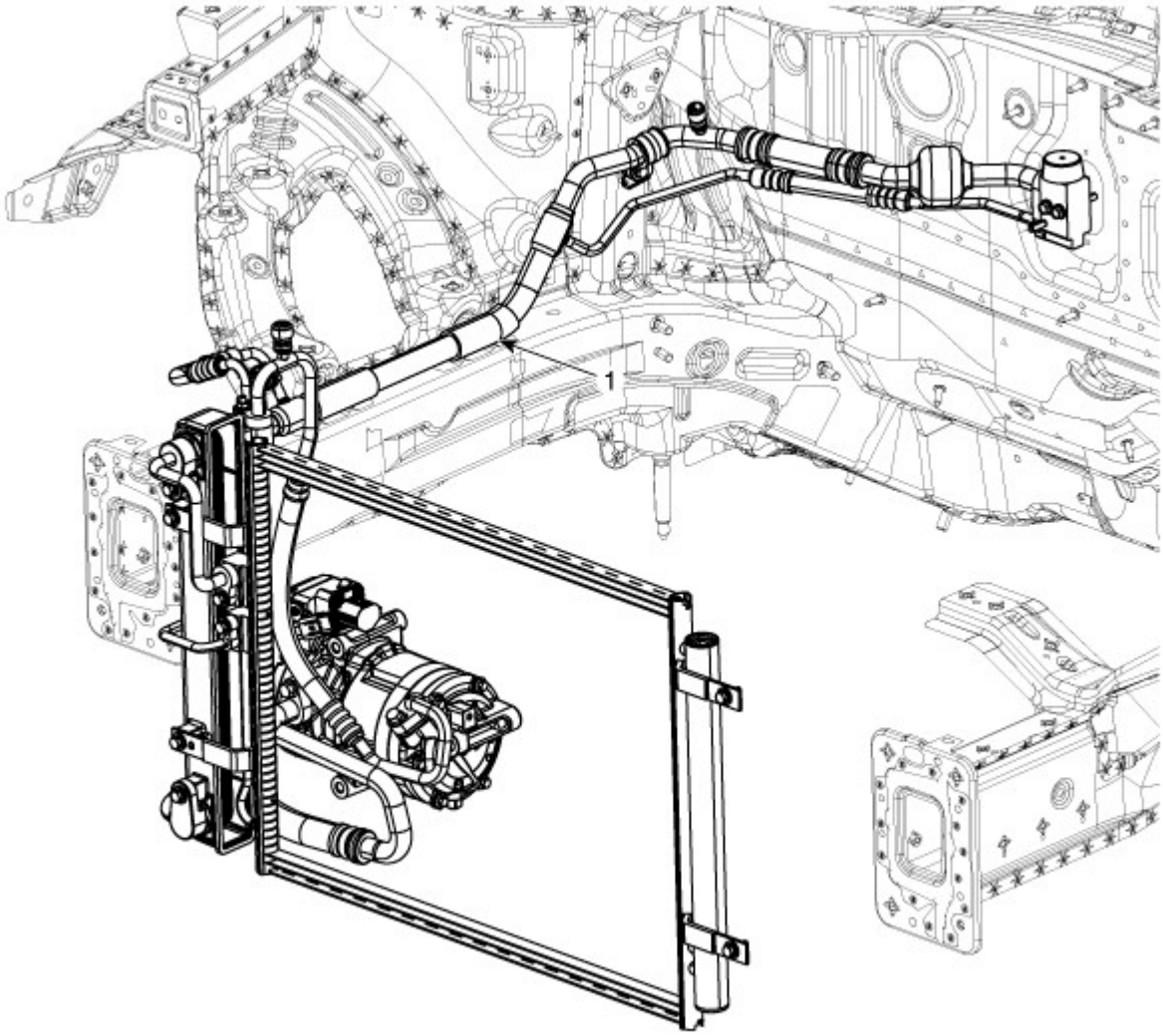


1. Refrigerant Line Assembly

## Replacement

1. If the compressor is marginally operable, run the engine at idle speed, and let the air conditioning work for a few minutes, then shut the engine off.
2. Disconnect the negative (-) battery terminal.
3. Recover the refrigerant with a recovery / charging station.

> **WARNING**
> - If the POE oil of the system gets mixed with PAG oil, then dielectric breakdown due to decreased volumetric resistivity can occur and inoperative A/C compressor may result, A/C compressor may not work.

4. Remove the engine cover.
   (Refer to Engine Mechanical System - "Engine Cover")
5. Remove the engine mounting support bracket.
   (Refer to Engine Mechanical System - "Engine Mounting")
6. Remove the bolts and the expansion valve (A) from the evaporator core.

   **Tightening torque :**
   8.8 - 13.7 N.m (0.9 - 1.4 kgf.m, 6.5 - 10.1 lb-ft)

7. Remove the 2 nuts, and then disconnect the discharge line (A) and liquid line (B) from the condenser.

   **Tightening torque :**
   8.8 - 13.7 N.m ( 0.9 - 1.4 kgf.m, 6.5 - 10.1 lb-ft)

8. Disconnect the A/C pressure transducer connector (A).

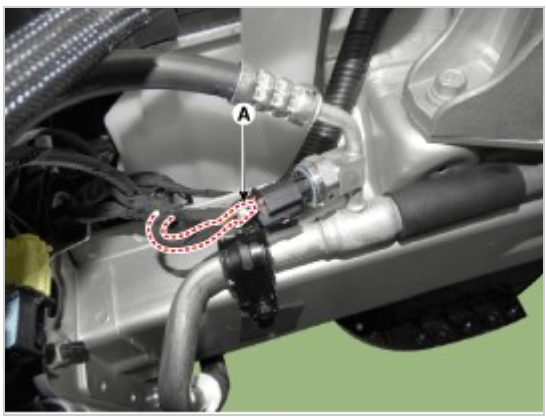

9. Remove the engine room under cover.
   (Refer to Engine Mechanical System - "Engine Room Under Cover")
10. Remove the bolts, then disconnect the suction line (A) and discharge line (B) from the compressor.

**Tightening torque :**
7.8 - 11.8 N.m (0.8 - 1.2 kgf.m, 5.8 - 8.7 lb-ft)

**NOTICE**

- Plug or cap the lines immediately after disconnecting them to avoid moisture and dust contamination.

11. Loosen the bracket mounting bolt (B) from suction& liquid assembly (A).

**Tightening torque :**
7.8 - 11.8 N.m (0.8 - 1.2 kgf.m, 5.8 - 8.7 lb-ft)

12. Remove the refrigerant line assembly (A) to the upper of engine room.

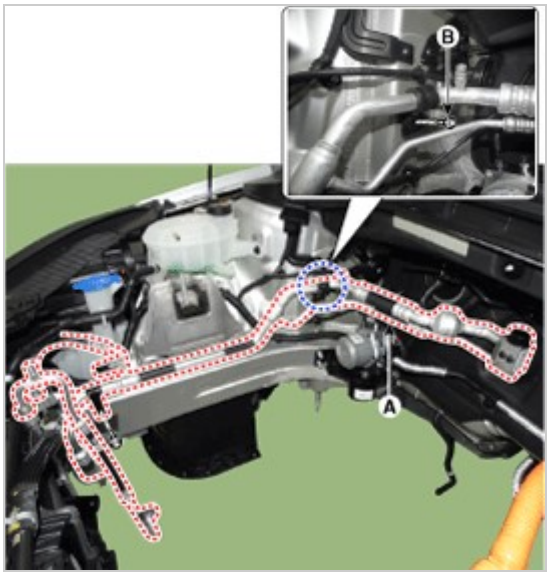


13. To install, reverse the removal procedure.

**CAUTION**

- Plug or cap the lines immediately after disconnecting them to avoid moisture and dust contamination.
- Tighten the bolt or nut joint to the specified torque.
- Using a gas leak detector, check for refrigerant leakage.
- Evacuate air in the refrigeration system and charge system with refrigerant.

  **Capacity :**600 ± 25 g (21.2 ± 0.88 oz.)

**WARNING**

- If the POE oil of the system gets mixed with PAG oil, then dielectric breakdown due to decreased volumetric resistivity can occur and inoperative A/C compressor may result, A/C compressor may not work.



## Description

The use of the electric A/C compressor instead of the conventional belt-driven A/C compressor allows several advantages. It can contribute to the improvement of fuel economy and the continuous air conditioning function is still possible when the engine is stopped during EV mode.

## Components Location

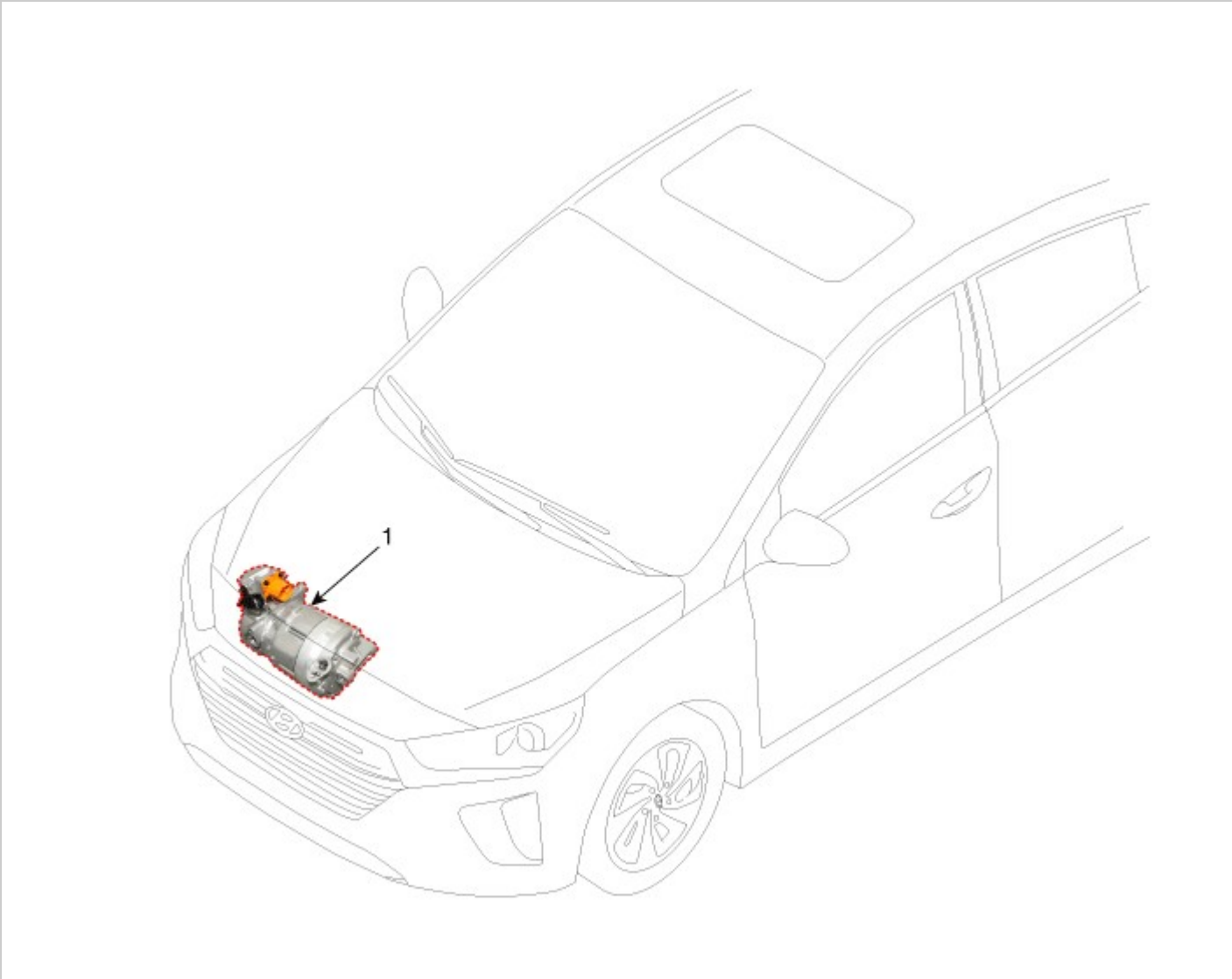


1. Electric A/C Compressor



## Connector Configurations

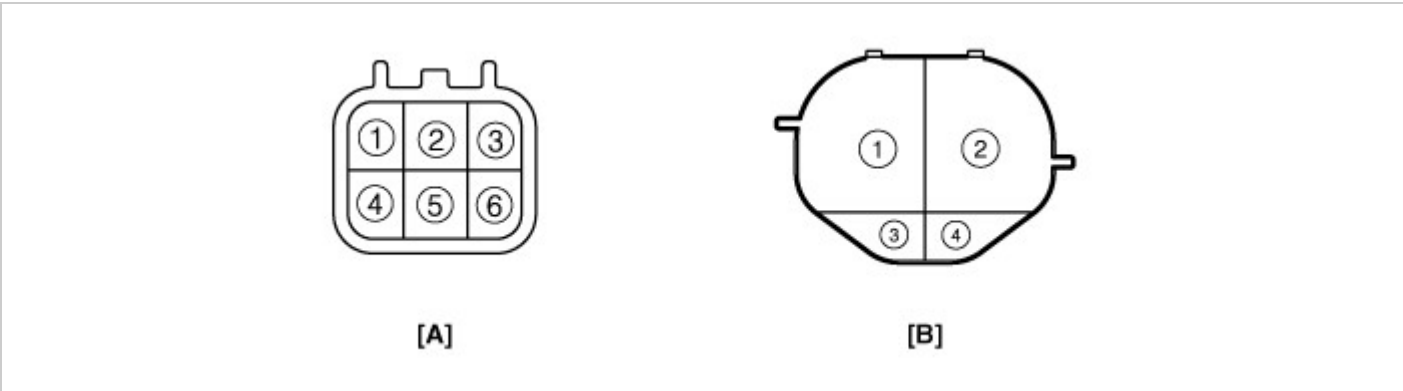


## Terminal Function

| Connector | Pin No. | Function |
|---|---|---|
| A | 1 | 12V Power Ground |
| | 2 | Climate CAN Low |
| | 3 | Interlock (-) |
| | 4 | 12V Power |
| | 5 | Climate CAN High |
| | 6 | Interlock (+) |
| B | 1 | High Voltage Power |
| | | |

| | | |
|---|---|---|
| | 2 | High Voltage Ground |
| | 3 | Compressor Interlock (-) |
| | 4 | Compressor Interlock (+) |



## Removal

**NOTICE**

### Precautions for using the plastic pulley

- Take care not to give physical impact to the plastic pulley.
  If exposed to the impact of dropping and collision, the pulley should not be used although not damaged.
- Be careful not to place the pulley to downwards of the floor or table.

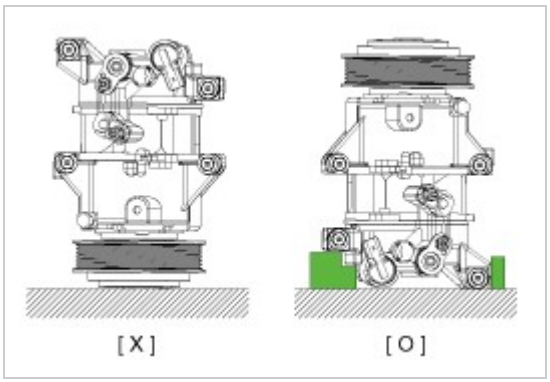


- Be careful not to apply the external force and impact on pulley while moving or using.

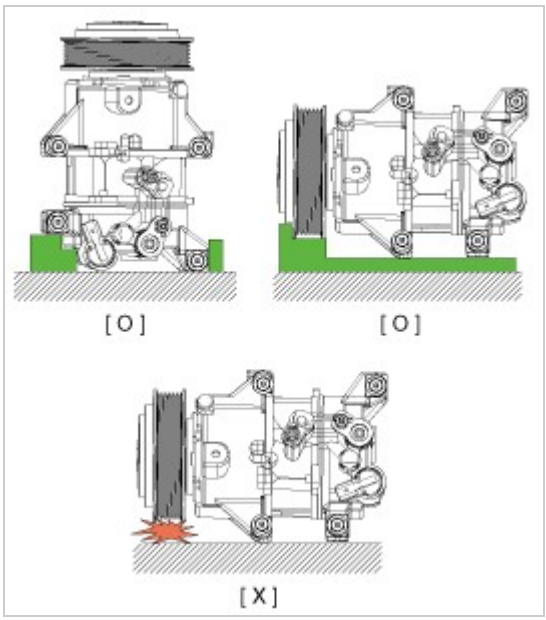


- Be careful not to apply force to the pulley.

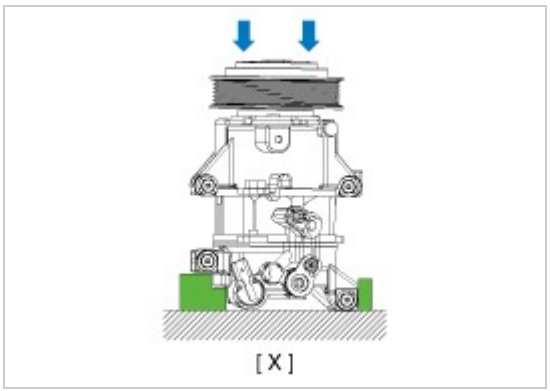


1. If the compressor is marginally operable, run the engine at idle speed, and let the air conditioning work for a few minutes, then shut the engine off.
2. Disconnect the negative (-) battery terminal.
3. Recover the refrigerant with a recovery / charging station.

**WARNING**

- If the POE oil of the system gets mixed with PAG oil, then dielectric breakdown due to decreased volumetric resistivity can occur and inoperative A/C compressor may result, A/C compressor may not work.

4. Remove the engine room under cover.
   (Refer to Engine Mechanical System - "Engine Room Cover")
5. Remove the bolts, then disconnect the suction line (A) and discharge line (B) from the compressor.

   **Tightening torque**:
   7.8 - 11.8 N.m (0.8 - 1.2 kgf.m, 5.8 - 8.7 lb-ft)

**NOTICE**

- Plug or cap the lines immediately after disconnecting them to avoid moisture and dust contamination.

6. Disconnect the compressor connector (A) and high voltage connector (B) after loosening bolt.

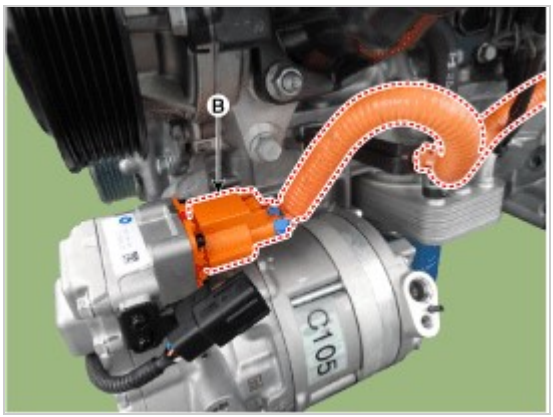


7. Remove the compressor (A) by loosening the mounting bolts.

   **Tightening torque :**
   20.0 - 32.95 N.m (2.04 - 3.36 kgf.m, 14.75 - 24.30 lb-ft)

## Installation

1. Make sure the compressor mounting bolt with the correct length is screwed in. Tighten the mounting bolts with the specified tightening order.

   **Tightening torque :**
   20.0 - 32.95 N.m (2.04 - 3.36 kgf.m, 14.75 - 24.30 lb-ft)

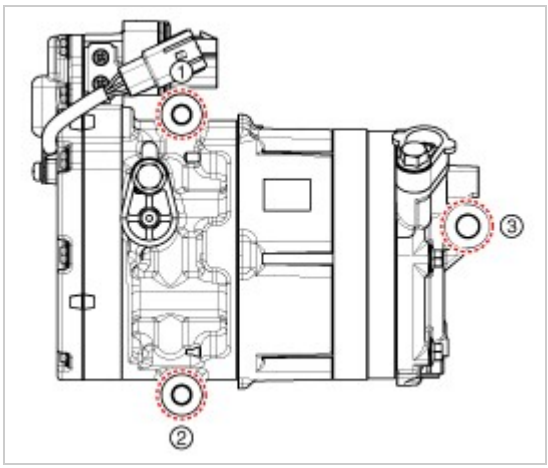


2. To install, reverse the removal procedure.

**NOTICE**

- If you install a new compressor, drain all the refrigerant oil from the removed compressor and measure its volume. Subtract the volume of drained oil from the original capacity. The result is the amount of oilcompressor oil you should drain from the new compressor (through the suction fitting).
- Replace the O-rings with new ones at each fitting, and apply a thin coat of refrigerant oil before installing them. Be sure to use the right O-rings for R-134a or R-1234yf to avoid leakage.
- To avoid contamination, do not return the oil to the container once dispensed, and never mix it with other refrigerant oils.
- Immediately after using the oil, replace the cap on the container and seal it to avoid moisture absorption.

**WARNING**

- If the POE oil of the system gets mixed with PAG oil, then dielectric breakdown due to decreased volumetric resistivity can occur and inoperative A/C compressor may result, A/C compressor may not work.



## Components Location

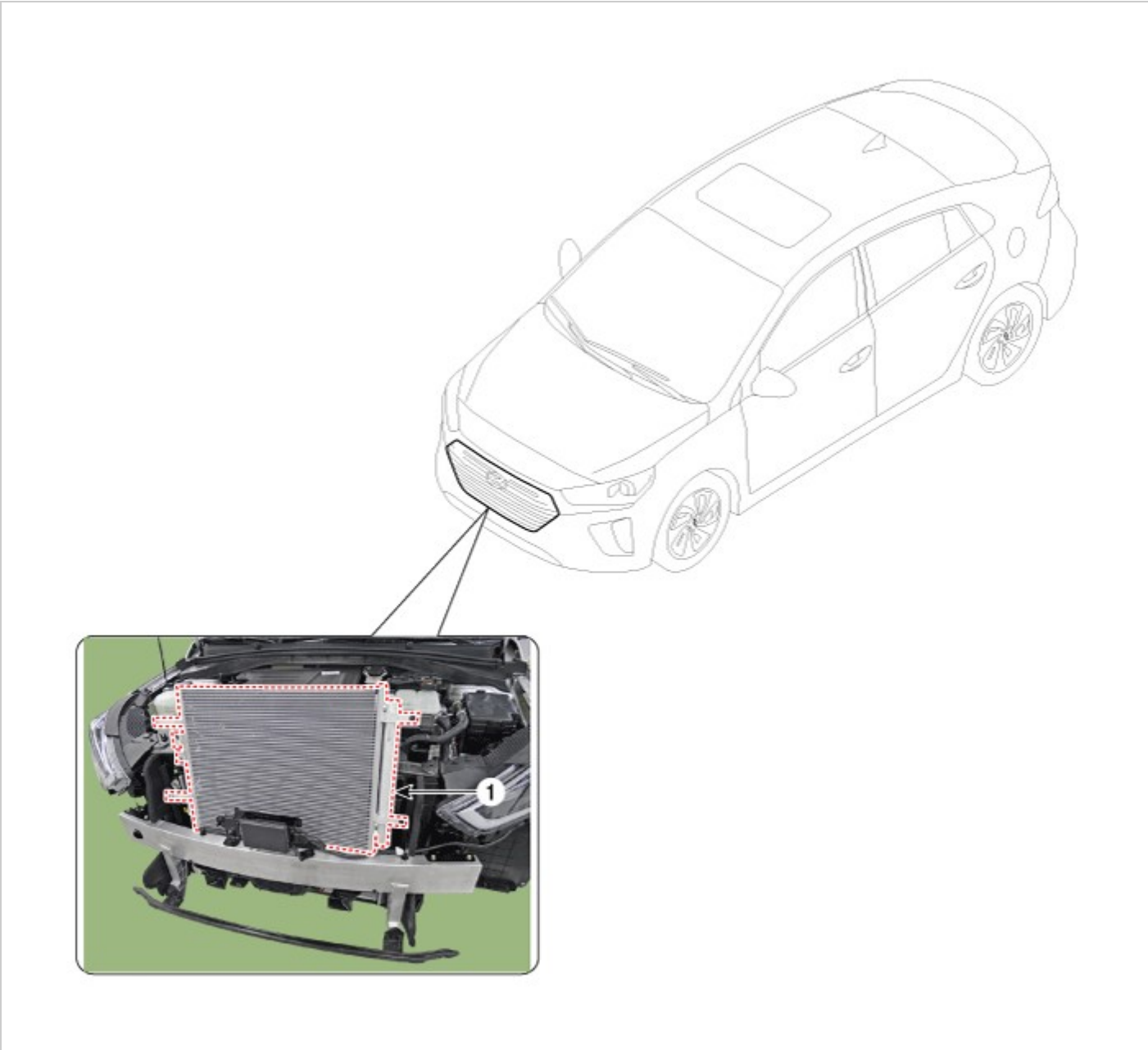


1. Condenser



## Inspection

1. Check the condenser fins for clogging and damage. If clogged, clean them with water, and blow them with compressed air. If bent, gently bend them using a screwdriver or pliers.
2. Check the condenser connections for leakage, and repair or replace it, if required.

## Replacement

1. Recover the refrigerant with a recovery / recycling / charging station.

**WARNING**

- If the POE oil of the system gets mixed with PAG oil, then dielectric breakdown due to decreased volumetric resistivity can occur and inoperative A/C compressor may result, A/C compressor may not work.

2. Disconnect the negative (-) battery terminal.
3. Remove the front bumper.
   (Refer to Body - "Front Bumper Cover")
4. Loosen the mounting bolts, remove the radiator upper cover (A).

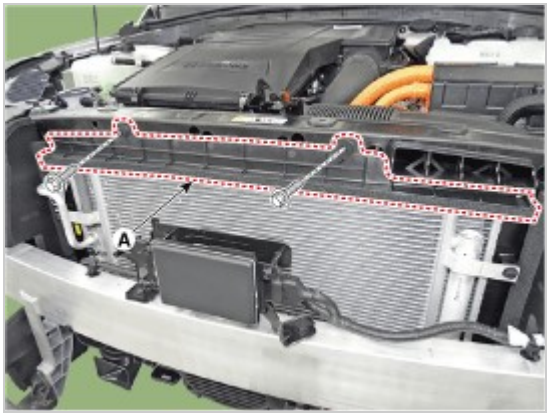


5. After loosening the mounting bolts, remove the condenser (A).

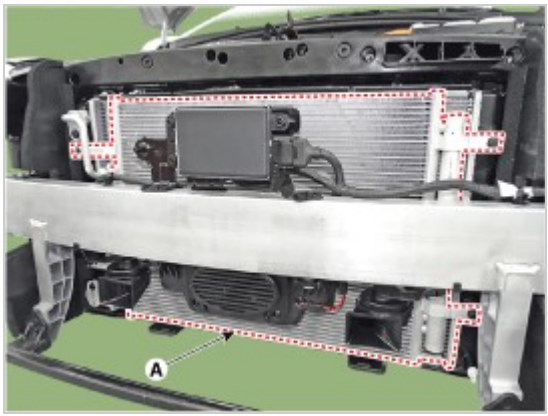


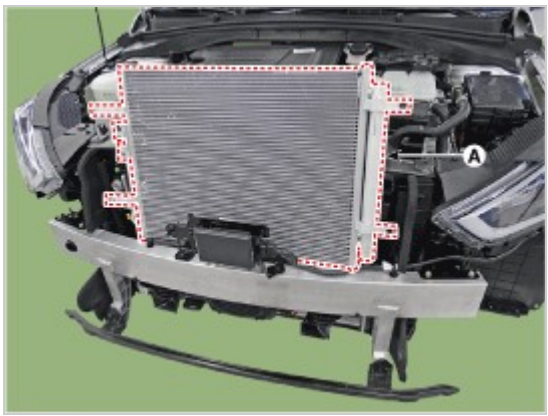


6. To install, reverse the removal procedure.

**NOTICE**

- If you"re installing a new condenser, add refrigerant oil (POE OIL).
- Replace the O-rings with new ones at each fitting, and apply a thin coat of refrigerant oil before installing them. Be sure to use the right O-rings for R-134a to avoid leakage.
- Be careful not to damage the radiator and condenser fins when installing the condenser.
- Charge the system, and test its performance.

**WARNING**

- If the POE oil of the system gets mixed with PAG oil, then dielectric breakdown due to decreased volumetric resistivity can occur and inoperative A/C compressor may result, A/C compressor may not work.



## Replacement

1. Remove the condenser.
2. Remove the cap (A) on the bottom of the condenser with a L wrench.

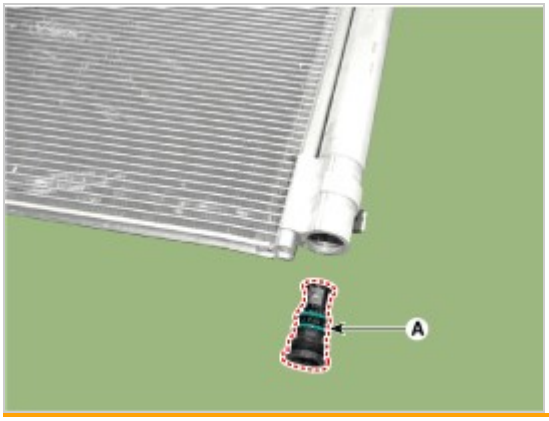


**Tightening torque :**
9.81 - 14.71 N.m (1.0 - 1.5 kgf.m, 7.2 - 10.8 lb-ft)

3. Remove the receiver-drier (A) from condenser using a long nose plier. Check for crumbled receiver-drier and clogged bottom cap filter.

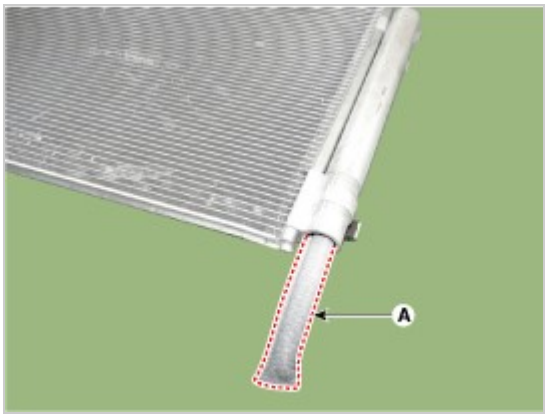


4. Apply air conditioning compressor oil along the O-rings and threads of the new bottom cap.
5. Insert a new receiver-drier into the receiver drier tank. The receiver-drier must be sealed in vacuum before it is exposed to air for use.
6. Install a new bottom cap to the condenser.

**NOTICE**

- Always replace the receiver-drier and bottom cap at the same time.
- Be careful not to damage the radiator and condenser fins when installing the condenser.
- Charge the system, and test its performance.
- Replace the O-rings (A) with new ones at each fitting, and apply a thin coat of refrigerant oil before installing them. Be sure to use the right O-rings (A) for R-134a to avoid leakage.

**WARNING**

- If the POE oil of the system gets mixed with PAG oil, then dielectric breakdown due to decreased volumetric resistivity can occur and inoperative A/C compressor may result, A/C compressor may not work.



## Description

The A/C Pressure Transducer (APT) converts the pressure value of high pressure line into voltage value after measuring it. By converted voltage value, engine ECU controls the cooling fan by operating it high speed or low speed. Engine ECU stops the operation of the compressor when the temperature of refrigerant line is very high or very low irregularly to optimize air conditioning system.

## Inspection

1. Measure the pressure of high pressure line by measuring voltage output between terminal “1” and “2”.

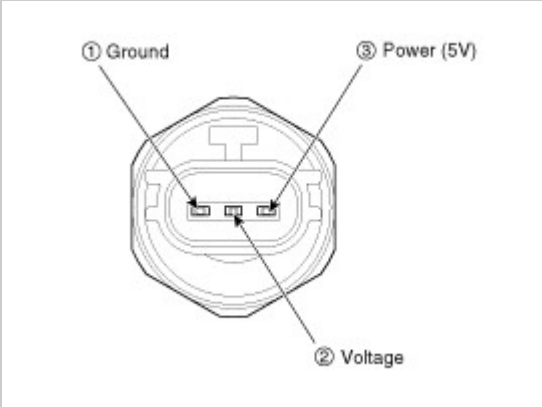


2. Inspect the voltage value whether it is sufficient to be regular value or not.

   Voltage = 0.00878835 * Pressure + 0.37081095

3. If the measured voltage value is not wihtin specification, replace the A/C pressure transducer.

## Replacement

1. Disconnect the negative (-) battery terminal.
2. Recover the refrigerant with a recovery/charging station.

> **WARNING**
> - If the POE oil of the system gets mixed with PAG oil, then dielectric breakdown due to decreased volumetric resistivity can occur and inoperative A/C compressor may result, A/C compressor may not work.

3. Disconnect the A/C pressure transducer connector (A).

4. Remove the A/C pressure transducer (A).

   **Tightening torque :**
   9.8 - 11.8 N.m (1.0 - 1.2 kgf.m, 7.2 - 8.7 lb-ft)

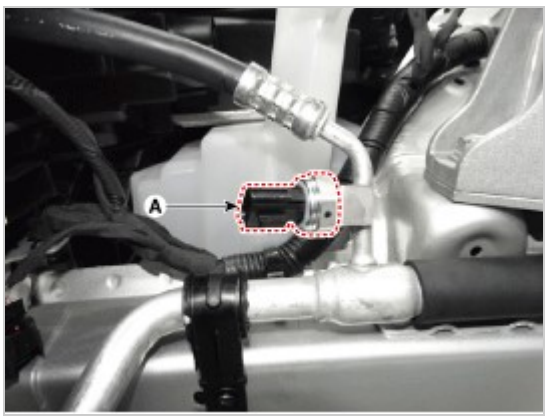


> **CAUTION**
> - Be careful not to bend the liquid & suction pipe.

5. To install, reverse the removal procedure.

**NOTICE**

- When installing, replace it with a new O-ring.

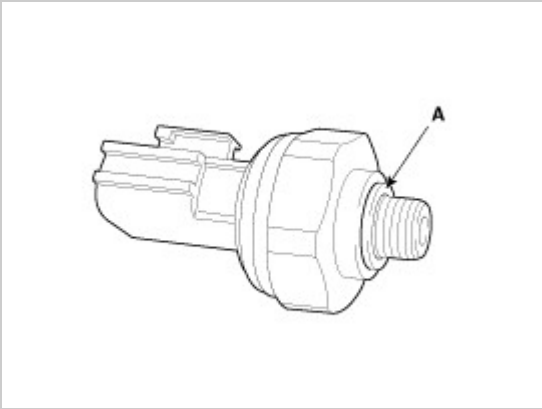


**Heating, Ventilation and Air Conditioning**

## Description

The evaporator temperature sensor will detect the evaporator core temperature and interrupt compressor relay power in order to prevent evaporator from freezing by excessive cooling. The evaporator temperature sensor has the Negative Temperature Coefficient (NTC). Electrical resistivity of NTC will increase with decreasing temperature and decrease with increasing temperature.

**Heating, Ventilation and Air Conditioning**

## Inspection

1. Turn the ignition switch OFF.
2. Disconnect the evaporator temperature sensor connector.
3. Measure the resistance between terminal "+" and "-" of the evaporator temperature sensor.

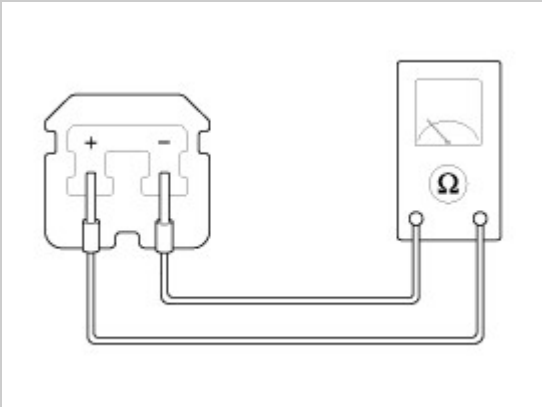


## Specification

| Evaporator core temperature [°C (°F)] | Resistance [KΩ] | Voltage [V] |
|---|---|---|
| -10 (14) | 43.35 | 2.96 |
| 0 (32) | 27.62 | 2.40 |
| 10 (50) | 18.07 | 1.88 |
| 20 (68) | 12.11 | 1.44 |
| 30 (86) | 8.30 | 1.08 |
| 40 (104) | 5.81 | 0.81 |

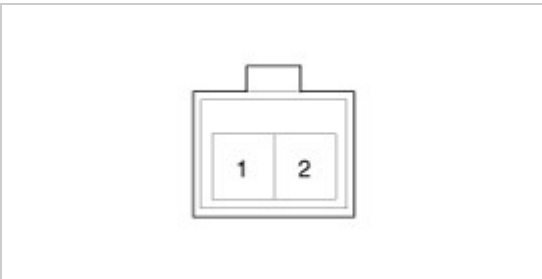

1. Sensor Ground
2. Evaporator sensor (+)

## Diagnosis With GDS

1. The heating, ventilation and air conditioning can be quickly diagnosed failed parts with vehicle diagnostic system (GDS).
   ※ The diagnostic system (GDS) provides the following information.
   (1) Self diagnosis : Checking the failure code (DTC) and display.
   (2) Current data : Checking the system input/output data state.
   (3) Actuation test : Checking the system operation condition.
   (4) Additional function : Other controlling such as he system option and zero point adjustment.
2. Select the "Car model" and the system to be checked in order to check the vehicle with the tester.
3. Select the "Current data" menu to search the current state of the input / output data.
   The input/output data for the sensors corresponding to the Evaporator Temperature Sensor can be checked.

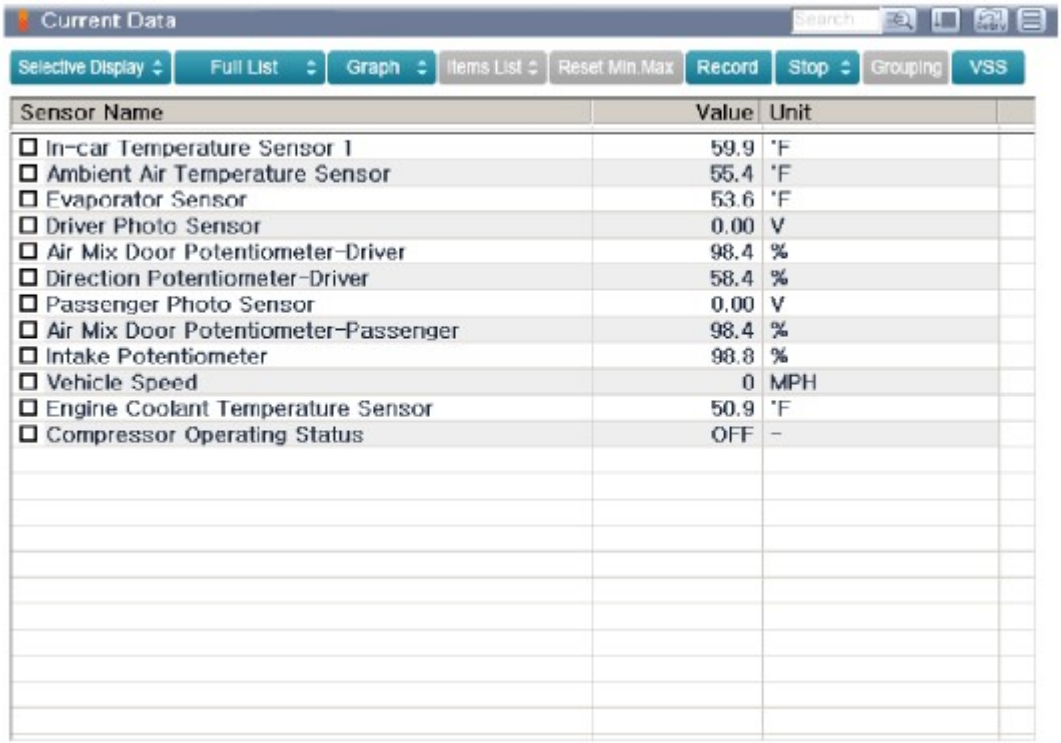


| Sensor Name | Value | Unit |
|---|---|---|
| In-car Temperature Sensor 1 | 59.9 | °F |
| Ambient Air Temperature Sensor | 55.4 | °F |
| Evaporator Sensor | 53.6 | °F |
| Driver Photo Sensor | 0.00 | V |
| Air Mix Door Potentiometer-Driver | 98.4 | % |
| Direction Potentiometer-Driver | 58.4 | % |
| Passenger Photo Sensor | 0.00 | V |
| Air Mix Door Potentiometer-Passenger | 98.4 | % |
| Intake Potentiometer | 98.8 | % |
| Vehicle Speed | 0 | MPH |
| Engine Coolant Temperature Sensor | 50.9 | °F |
| Compressor Operating Status | OFF | - |

## Replacement

1. Disconnect the negative (-) battery terminal.
2. Remove the heater and blower assembly.
   (Refer to Heater - "Heater Unit")
3. Remove the evaporator core cover (A) after loosening the mounting screws.

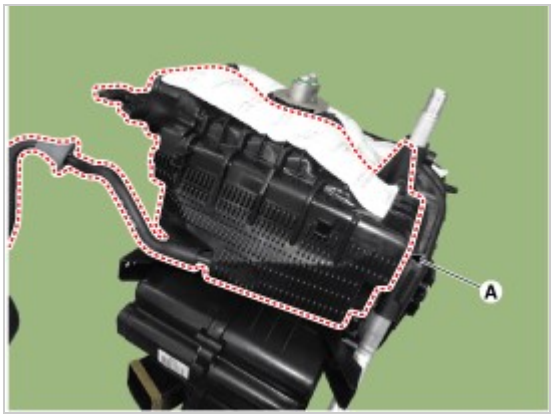


4. Pull out the evaporator temperature sensor (A) from the evaporator core.

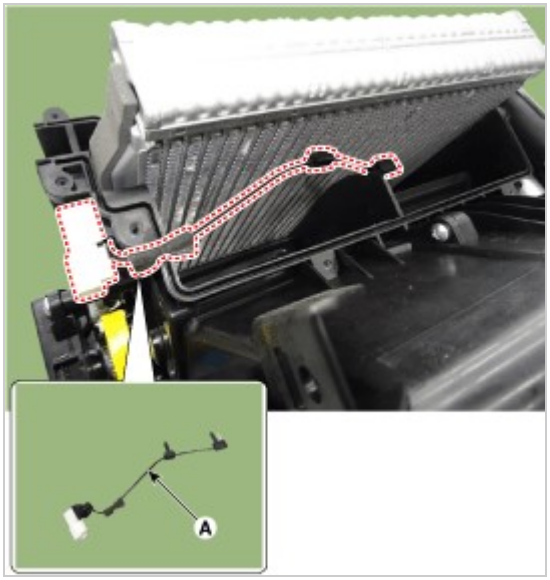


5. To install, reverse the removal procedure.

**NOTICE**

- If you"re installing a new condenser, add refrigerant oil (POE OIL).
- Replace the O-rings with new ones at each fitting, and apply a thin coat of refrigerant oil before installing them. Be sure to use the right O-rings for R-134a to avoid leakage.
- Be careful not to damage the radiator and condenser fins when installing the condenser.
- Charge the system, and test its performance.

**WARNING**

- If the POE oil of the system gets mixed with PAG oil, then dielectric breakdown due to decreased volumetric resistivity can occur and inoperative A/C compressor may result, A/C compressor may not work.

**Heating, Ventilation and Air Conditioning**

## Description

The In-car air temperature sensor is built in the heater & A/C control unit.

The sensor contains a thermistor which measures the temperature of the inside. The signal decided by the resistance value which changes in accordance with perceived inside temperature, is delivered to heater control unit and according to this signal the control unit regulates in-car temperature to intended value.

**Heating, Ventilation and Air Conditioning**

## Diagnosis With GDS

1. The heating, ventilation and air conditioning can be quickly diagnosed failed parts with vehicle diagnostic system (GDS).
   ※ The diagnostic system (GDS) provides the following information.
   (1) Self diagnosis : Checking the failure code (DTC) and display.
   (2) Current data : Checking the system input/output data state.
   (3) Actuation test : Checking the system operation condition.
   (4) Additional function : Other controlling such as he system option and zero point adjustment.
2. Select the "Car model" and the system to be checked in order to check the vehicle with the tester.
3. Select the "Current data" menu to search the current state of the input / output data.
   The input / output data for the sensors corresponding to the In-car Sensor can be checked.

Current Data

Selective Display | Full List | Graph | Items List | Reset Min Max | Record | Stop | Grouping | VSS

| Sensor Name | Value | Unit |
|---|---|---|
| In-car Temperature Sensor 1 | 59.9 | °F |
| Ambient Air Temperature Sensor | 55.4 | °F |
| Evaporator Sensor | 53.6 | °F |
| Driver Photo Sensor | 0.00 | V |
| Air Mix Door Potentiometer-Driver | 98.4 | % |
| Direction Potentiometer-Driver | 58.4 | % |
| Passenger Photo Sensor | 0.00 | V |
| Air Mix Door Potentiometer-Passenger | 98.4 | % |
| Intake Potentiometer | 98.8 | % |
| Vehicle Speed | 0 | MPH |
| Engine Coolant Temperature Sensor | 50.9 | °F |
| Compressor Operating Status | OFF | - |

## Replacement

1. Disconnect the negative (-) battery terminal.
2. Remove the crash pad side garnish [RH].
   (Refer to Body - "Glove Box Upper Cover Assembly ")
3. After loosening the mounting screws, remove the A/C & heater controller unit (A).

4. Disconnect the A/C & heater controller connectors (A).

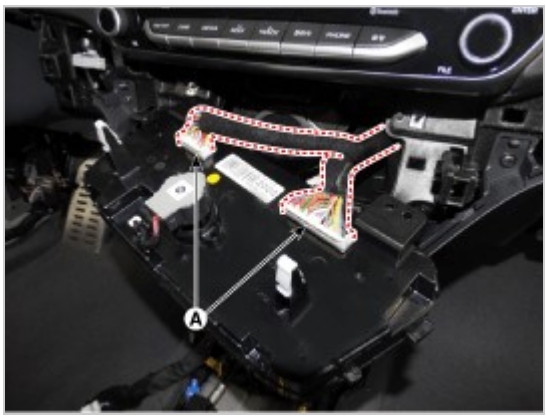


5. Disconnect the connector (A) and then remove the incar sensor (B).

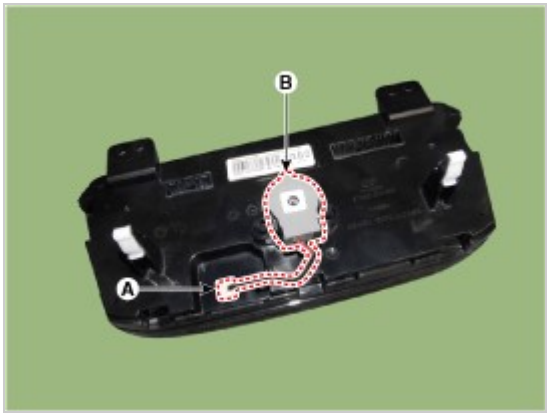


6. To install, reverse the removal procedure.

> **Information**
> - Make sure the connector are connected in properly.
> - Replace any damaged clips.

**Heating, Ventilation and Air Conditioning**

## Description

The photo sensor is located at the center of the defrost nozzles.

The photo sensor contains a photovoltaic (sensitive to sunlight) diode. The solar radiation received by its light receiving portion, generates an electromotive force in proportion to the amount of radiation received which is transferred to the automatic temperature control module so that the solar radiation compensation will be performed.

**Heating, Ventilation and Air Conditioning**

## Inspection

1. Turn the ignition switch ON.
2. Connect the GDS.
3. Emit intensive light toward the photo sensor using a lamp, and check the output voltage change.
4. The voltage will rise with higher intensive light and reduce with lower intensive light.

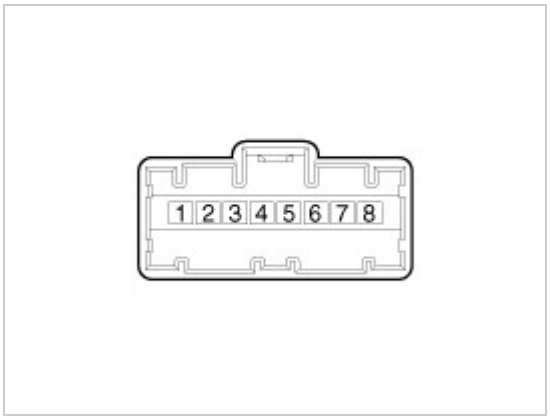


1. Auto light signal
2. Auto light ground
3. Photo signal (RH)
4. LED power (B+)
5. LED ground (To BCM)
6. Photo signal (LH)
7. Photo power
8. Auto light power (5V)

## Replacement

1. Disconnect the negative (-) battery terminal.
2. Using a screwdriver or remover, remove the photo sensor (A).

3. To install, reverse the removal procedure.

**Heating, Ventilation and Air Conditioning**

## Description

The ambient temperature sensor is located at the front of the condenser and detects ambient air temperature. It is a negative type thermistor; resistance will increase with lower temperature, and decrease with higher temperature.

The sensor output will be used for discharge temperature control, temperature regulation door contrl, blower motor level control, mix mode control and in-car humidity control.

**Heating, Ventilation and Air Conditioning**

## Components Location

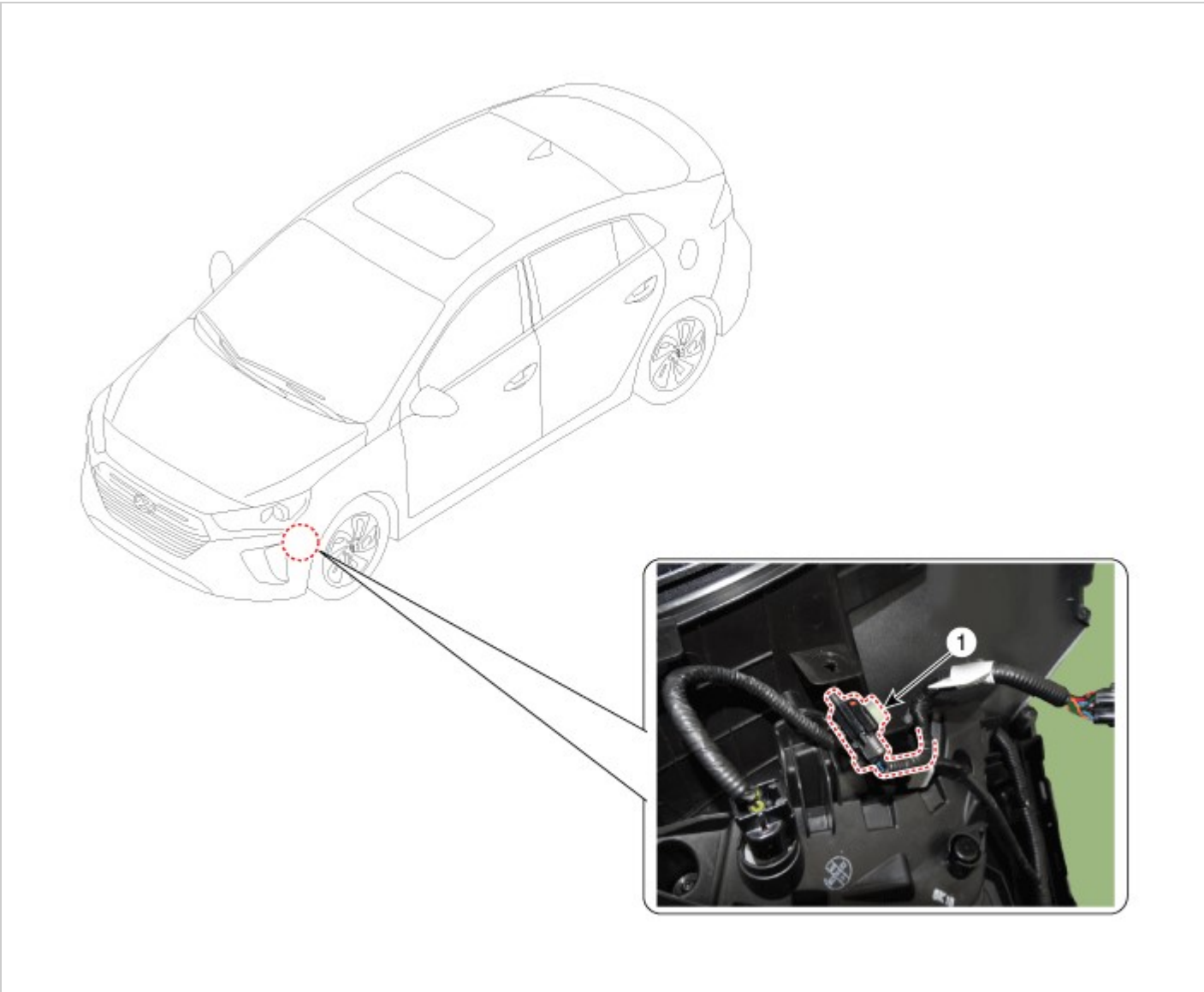

1. Ambient temperature sensor



## Inspection

1. Check the resistance of the ambient temperature sensor between terminals 1 and 2 whether it changes by changing the ambient temperature.

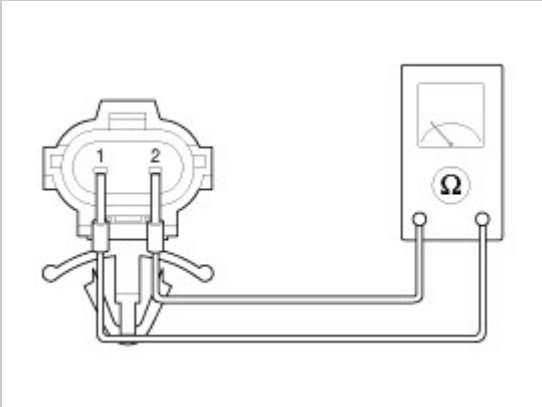


1. Ambient Sensor (+)
2. Sensor ground

## Specification

| Ambient temperature [°C (°F)] | Resistance between terminal 1 and 2 (kΩ) |
|---|---|
| -30 (-22) | 480.41 |
| -20 (-4) | 271.21 |
| -10 (14) | 158.18 |
| 0 (32) | 95.096 |
| 10 (50) | 58.799 |
| 20 (68) | 37.315 |
| 30 (86) | 24.26 |
| 40 (104) | 16.13 |
| 50 (122) | 10.95 |

## Diagnosis With GDS

1. The heating, ventilation and air conditioning can be quickly diagnosed failed parts with vehicle diagnostic system (GDS).
   ※ The diagnostic system (GDS) provides the following information.
   (1) Self diagnosis : Checking the failure code (DTC) and display.
   (2) Current data : Checking the system input/output data state.
   (3) Actuation test : Checking the system operation condition.
   (4) Additional function : Other controlling such as he system option and zero point adjustment.
2. Select the "Car model" and the system to be checked in order to check the vehicle with the tester.
3. Select the "Current data" menu to search the current state of the input / output data.
   The input / output data for the sensors corresponding to the Ambient Temperature Sensor can be checked.

Current Data

Selective Display | Full List | Graph | Items List | Reset Min Max | Record | Stop | Grouping | VSS

| Sensor Name | Value | Unit |
|---|---|---|
| In-car Temperature Sensor 1 | 59.9 | °F |
| Ambient Air Temperature Sensor | 55.4 | °F |
| Evaporator Sensor | 53.6 | °F |
| Driver Photo Sensor | 0.00 | V |
| Air Mix Door Potentiometer-Driver | 98.4 | % |
| Direction Potentiometer-Driver | 58.4 | % |
| Passenger Photo Sensor | 0.00 | V |
| Air Mix Door Potentiometer-Passenger | 98.4 | % |
| Intake Potentiometer | 98.8 | % |
| Vehicle Speed | 0 | MPH |
| Engine Coolant Temperature Sensor | 50.9 | °F |
| Compressor Operating Status | OFF | - |

## Replacement

1. Disconnect the negative (-) battery terminal.
2. Remove the front bumper.
   (Refer to Body - "Front Bumper Cover")
3. Disconnect the connector (A) and then remove the ambient temperature sensor (B).

4. To install, reverse the removal procedure.

**Heating, Ventilation and Air Conditioning**

## Description

The auto defogging sensor is installed on the front window glass. The sensor judges and sends signal if moisture occurs to blow out wind for defogging. The air conditioner control module receives signal from the sensor and restrains moisture and eliminate defog by controlling the intake actuator, A/C, auto defogging actuator, blower motor rpm, and mode actuator.

**Heating, Ventilation and Air Conditioning**

## Diagnosis With GDS

1. The heating, ventilation and air conditioning can be quickly diagnosed failed parts with vehicle diagnostic system (GDS).
   ※ The diagnostic system (GDS) provides the following information.
   (1) Self diagnosis : Checking the failure code (DTC) and display.
   (2) Current data : Checking the system input / output data state.
   (3) Actuation test : Checking the system operation condition.
   (4) Additional function : Other controlling such as he system option and zero point adjustment.
2. Select the "Car model" and the system to be checked in order to check the vehicle with the tester.
3. Select the "Current data" menu to search the current state of the input / output data.
   The input / output data for the sensors corresponding to the Auto Defogging Sensor can be checked.

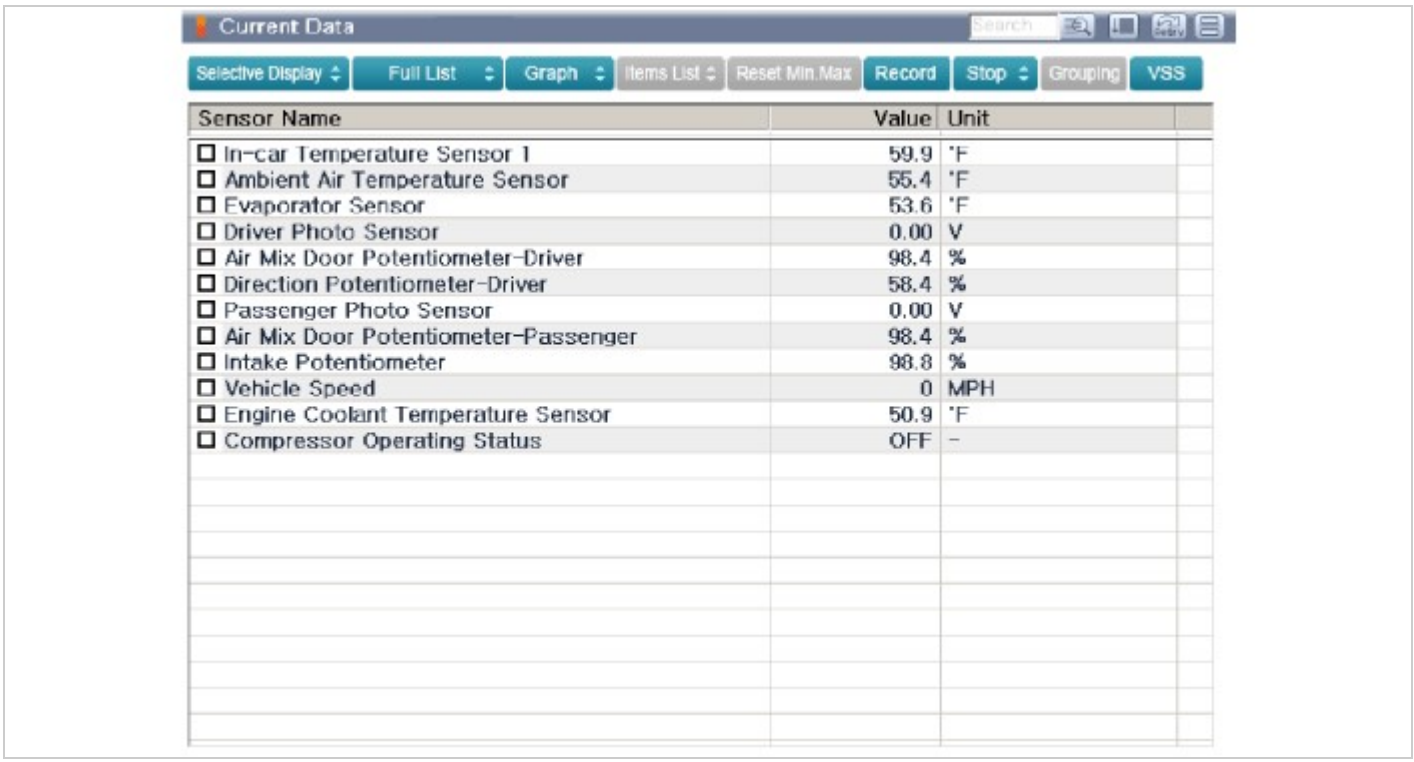


| Sensor Name | Value | Unit |
|---|---|---|
| In-car Temperature Sensor 1 | 59.9 | °F |
| Ambient Air Temperature Sensor | 55.4 | °F |
| Evaporator Sensor | 53.6 | °F |
| Driver Photo Sensor | 0.00 | V |
| Air Mix Door Potentiometer-Driver | 98.4 | % |
| Direction Potentiometer-Driver | 58.4 | % |
| Passenger Photo Sensor | 0.00 | V |
| Air Mix Door Potentiometer-Passenger | 98.4 | % |
| Intake Potentiometer | 98.8 | % |
| Vehicle Speed | 0 | MPH |
| Engine Coolant Temperature Sensor | 50.9 | °F |
| Compressor Operating Status | OFF | - |

## Replacement

1. Disconnect the negative (-) battery terminal.
2. Remove the auto defogging cover (A).

3. Disconnect the connector (A) and then remove the auto defogging sensor (B).

4. To install, reverse the removal procedure.



## Components Location

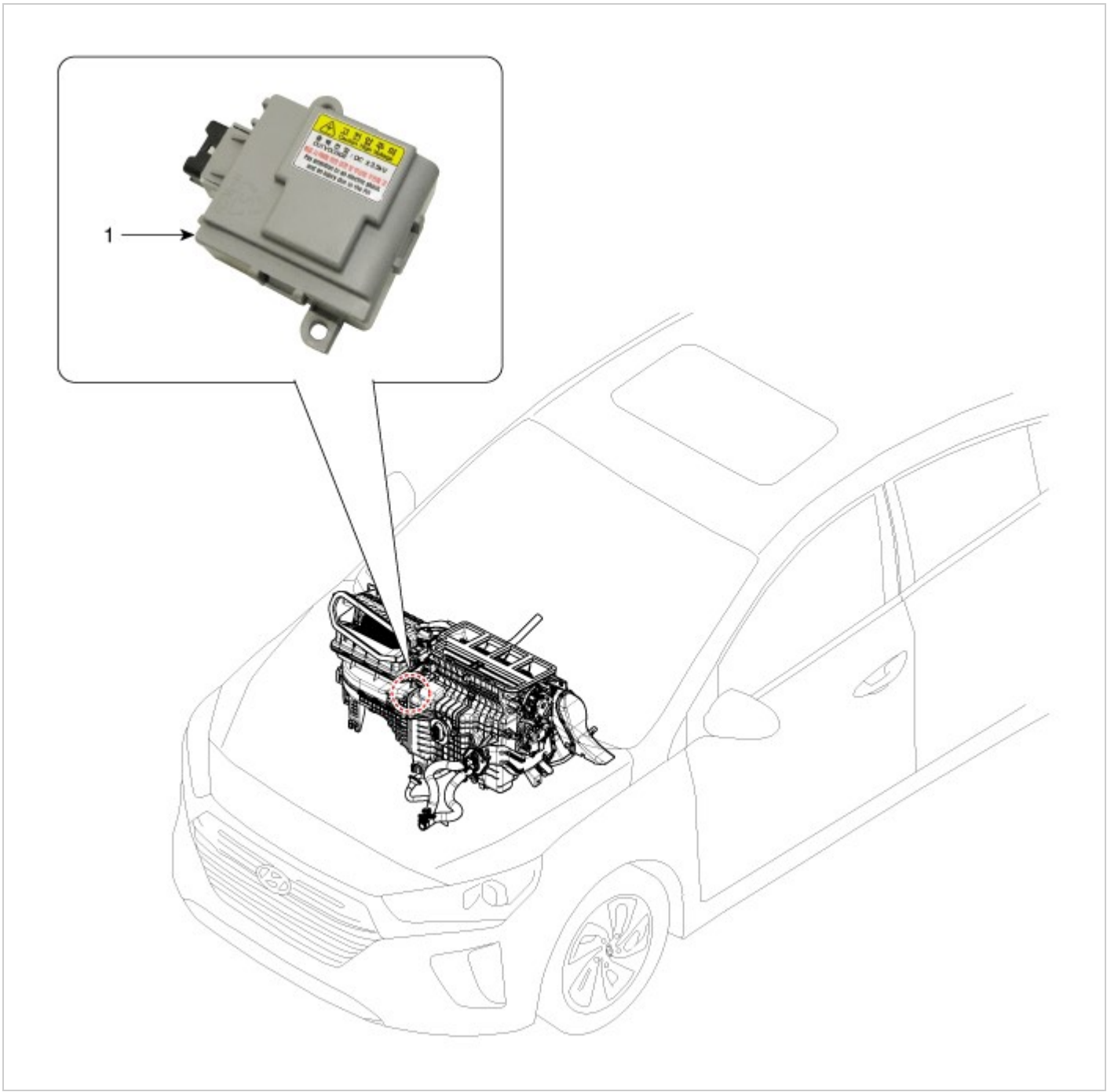


1. Cluster Ionizer



## Description

The cluster ionizer makes disinfection and decomposition of bad smell from the air-conditioner or inflow air. And it cleans the inside air of a vehicle.

When the ignition switch is ON, the ionizer runs "CLEAN" mode and then "ION" mode, switching between both modes.

In the “CLEAN” mode, the cluster ionizer generates negative ions and positive ions to help clean smells from the air.

In the “ION” mode, the cluster ionizer generates negative ions and cleans inside air of a vehicle.

## Inspection

1. Press the MODE switch more then 4 times within 2 seconds while pressing the OFF switch.

| Display | Fail description |
|---|---|
| 00 | Normal |
| 50 | Cluster ion generator fault |

* For diagnostic procedure, refer to DTC guide.

## Terminals

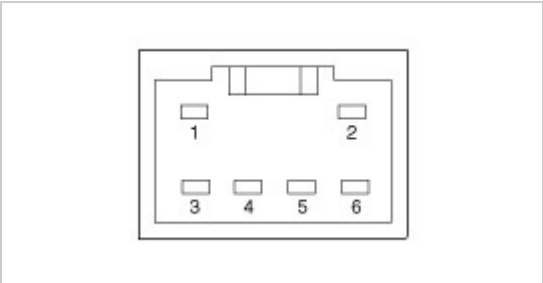


1. Ground
2. Sensor (+5V)
3. —
4. Clean signal
5. Ionizer diagnosis
6. —

## Diagnosis With GDS

1. The heating, ventilation and air conditioning can be quickly diagnosed failed parts with vehicle diagnostic system(GDS).
   ※ The diagnostic system(GDS) provides the following information.
   (1) Self diagnosis : Checking the failure code (DTC) and display.
   (2) Current data : Checking the system input/output data state.
   (3) Actuation test : Checking the system operation condition.
   (4) Additional function : Other controlling such as he system option and zero point adjustment.
2. Select the "Car model" and the system to be checked in order to check the vehicle with the tester.
3. Select the "Current data" menu to search the current state of the input/output data.
   The input/output data for the sensors corresponding to the Cluster Ionizer can be checked.

Current Data

Selective Display | Full List | Graph | Items List | Reset Min Max | Record | Stop | Grouping | VSS

| Sensor Name | Value | Unit |
|---|---|---|
| In-car Temperature Sensor 1 | 59.9 | °F |
| Ambient Air Temperature Sensor | 55.4 | °F |
| Evaporator Sensor | 53.6 | °F |
| Driver Photo Sensor | 0.00 | V |
| Air Mix Door Potentiometer-Driver | 98.4 | % |
| Direction Potentiometer-Driver | 58.4 | % |
| Passenger Photo Sensor | 0.00 | V |
| Air Mix Door Potentiometer-Passenger | 98.4 | % |
| Intake Potentiometer | 98.8 | % |
| Vehicle Speed | 0 | MPH |
| Engine Coolant Temperature Sensor | 50.9 | °F |
| Compressor Operating Status | OFF | - |

## Replacement

1. Disconnect the negative (-) battery terminal.
2. Remove the glove box upper cover assemblyl.
   (Refer to Body - "Glove Box Upper Cover Assembly ")
3. Disconnect the connector (A).
4. Loosen the mounting screw and then remove the cluster ionizer (B).

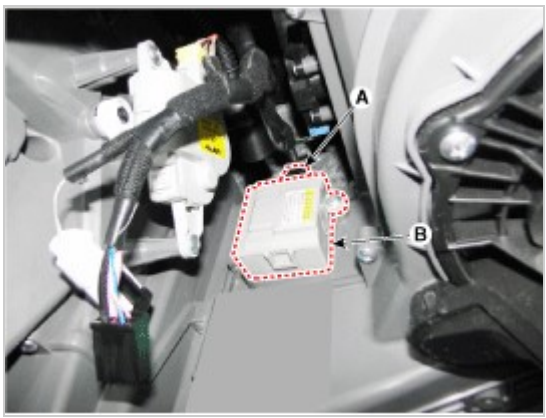


5. To install, reverse the removal procedure.

**Heating, Ventilation and Air Conditioning**

## Components Location

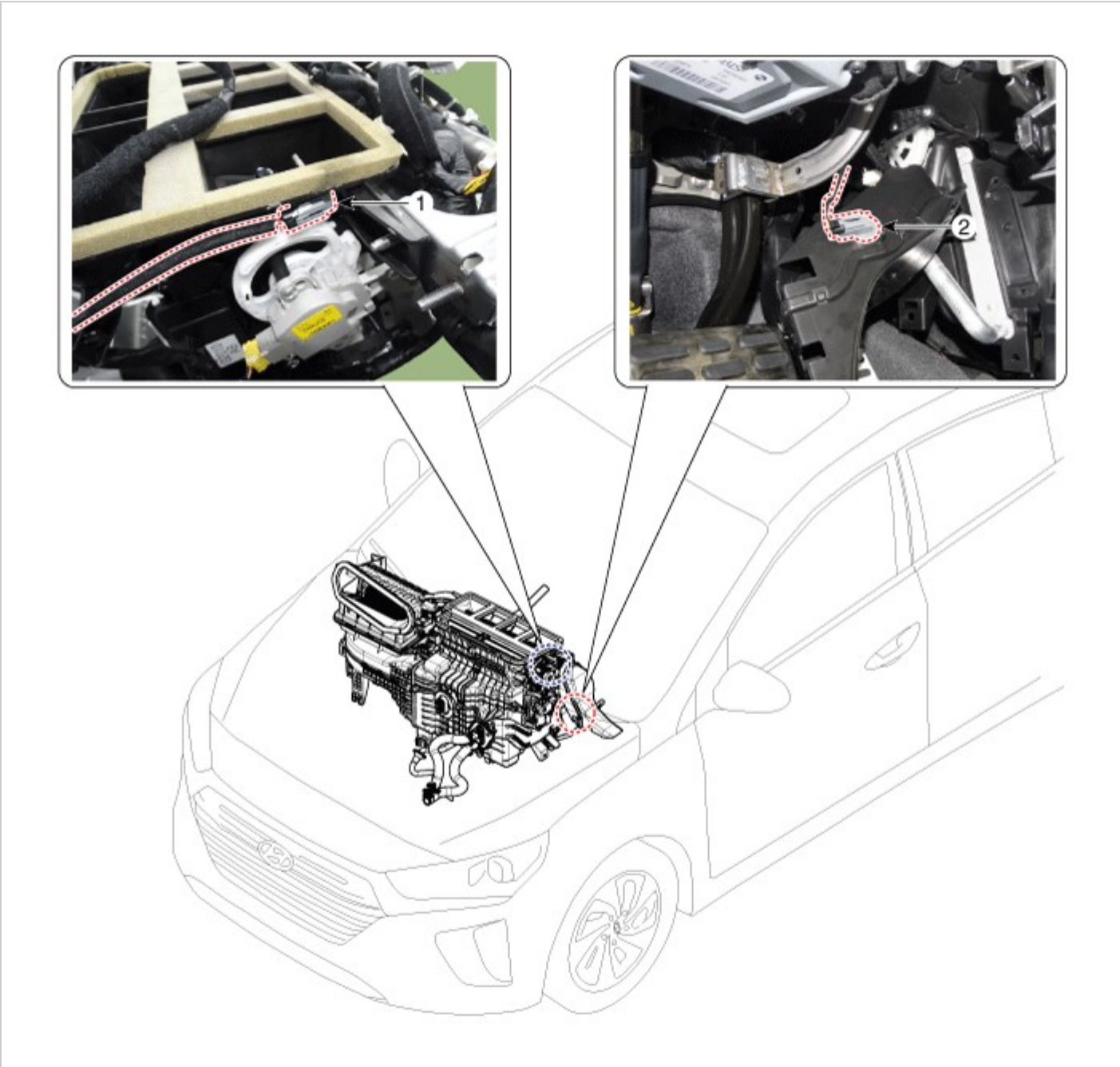


1. Duct sensor (Vent)
2. Duct sensor (Floor)



## Inspection

1. Check that the voltage values of No. 1, 2 duct sensors change

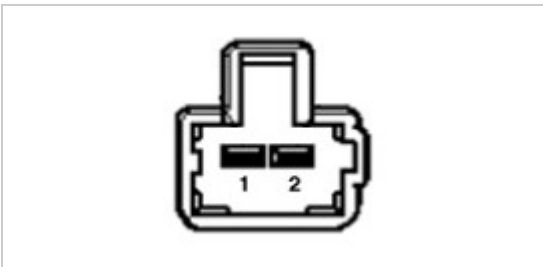


1. Sensor (+ 5V)
2. Sensor ground

## Specification

| Ambient temperature [°C (°F)] | Resistance (kΩ) | Voltage (V) |
|---|---|---|
| 50 (122) | 1.08 | 0.87 |
| 30 (86) | 2.42 | 1.61 |
| 10 (50) | 5.96 | 2.69 |
| 0 (32) | 9.73 | 3.28 |
| | | |

| | | |
|---|---|---|
| -20 (-4) | 28.01 | 4.23 |
| -40 (-40) | 87.72 | 4.73 |

## Replacement

**[Duct sensor - Floor]**

1. Disconnect the negative (-) battery terminal.
2. Remove the crash pad lower panel.
   (Refer to Body - "Crash Pad Lower Panel")
3. Remove the driver"s side shower duct (A) after loosening the screw.

4. Disconnect the duct sensor connector (A).
5. Hold the end of duct sensor (A) and then rotate it 90° clockwise. Remove the duct sensor (B) by pulling it.

6. To install, reverse the removal procedure.

**[Duct sensor - Vent]**

1. Disconnect the negative (-) battery terminal.
2. Remove the main crash pad assembly.
   (Refer to Body - "Main Crash Pad Assembly")
3. Disconnect the duct sensor connector (A).
4. Hold the end of duct sensor (A) and then rotate it 90° clockwise. Remove the duct sensor (B) by pulling it.

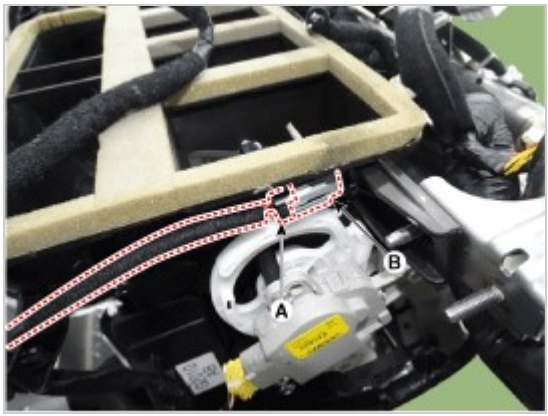


5. To install, reverse the removal procedure.

## Component Location

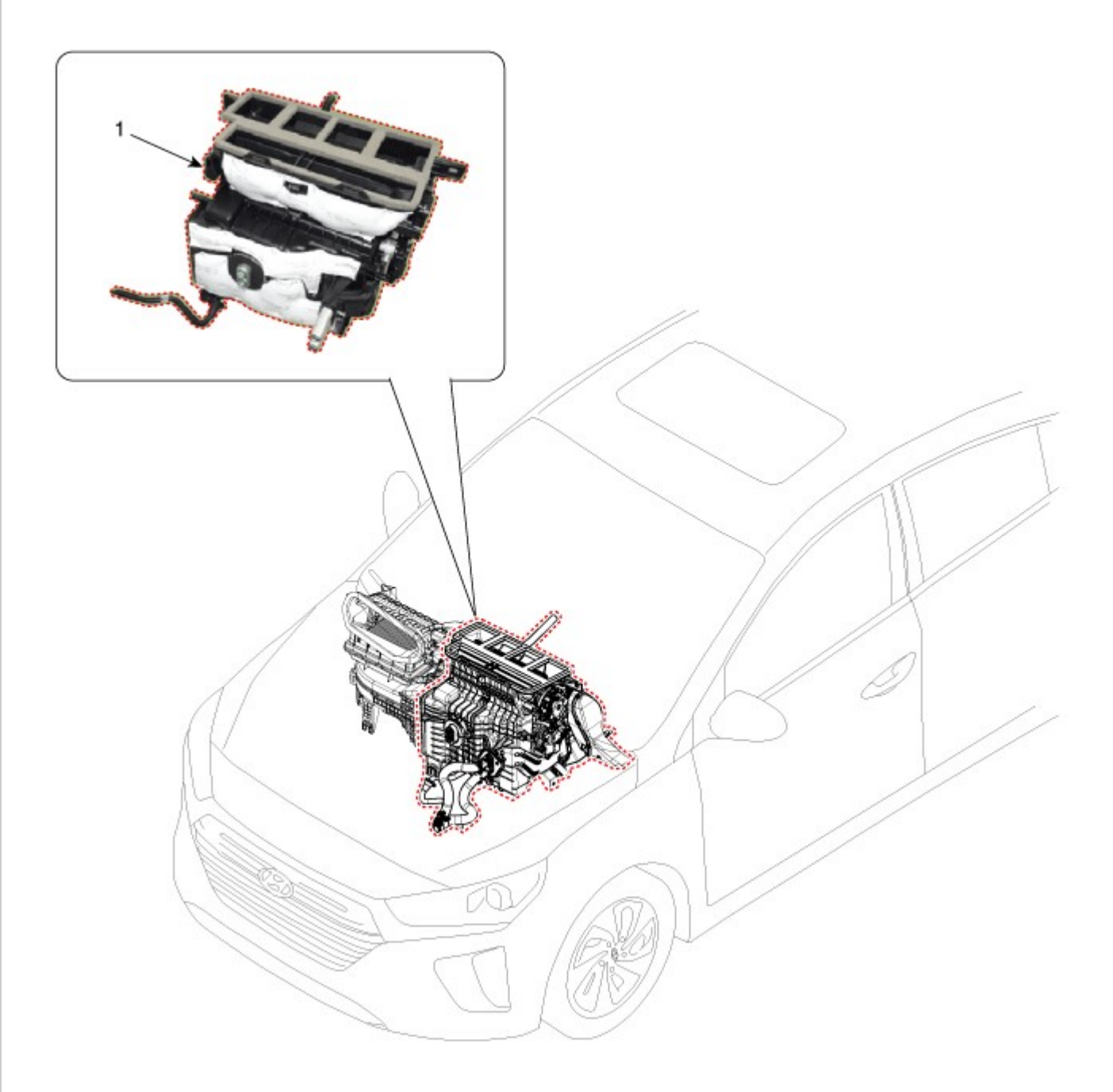


1. Heater unit assembly

## Compoents

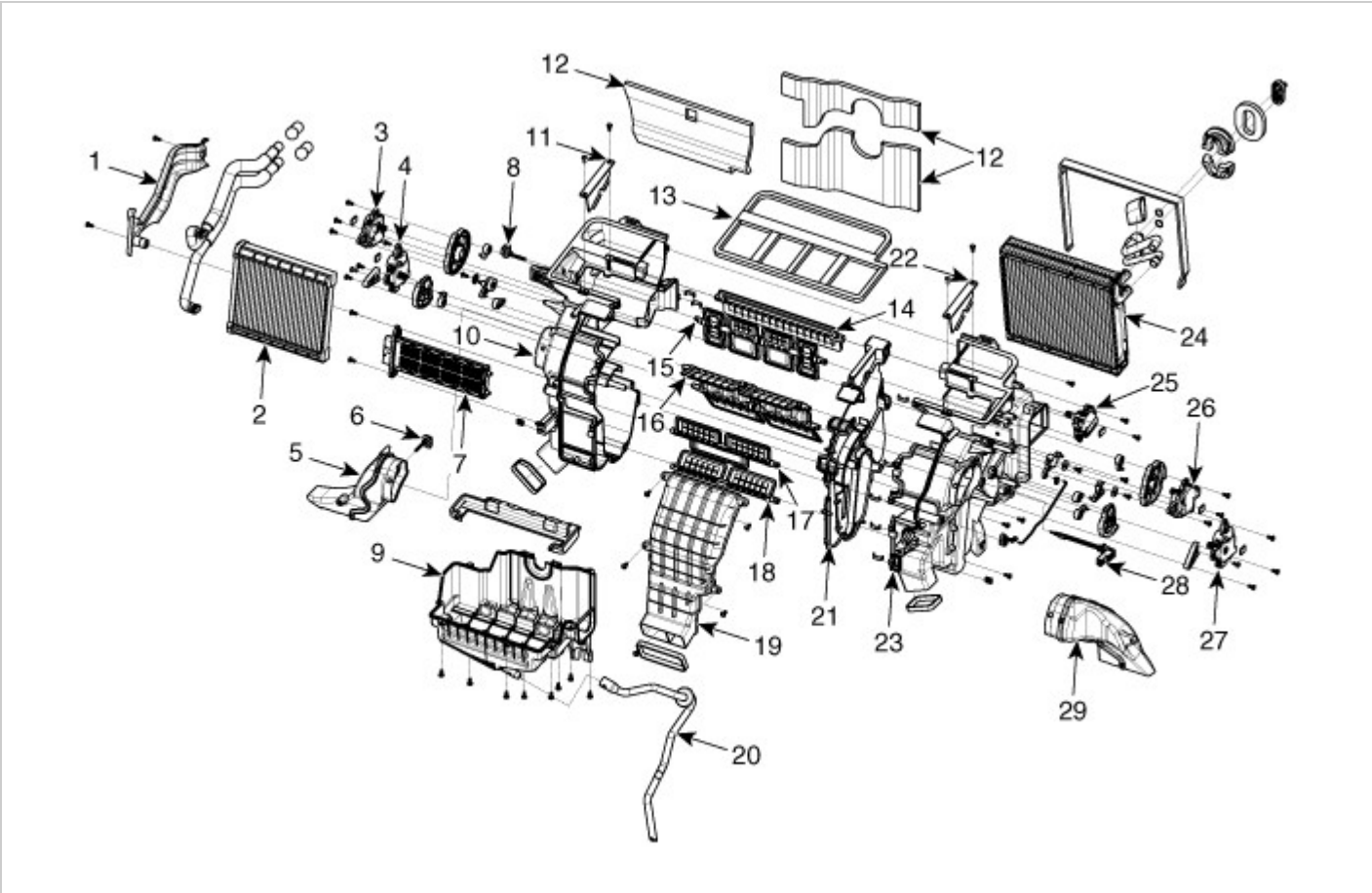


1. Heater core cover
2. Heater core & Seal assembly
3. Mode actuator [LH]
4. Temperature control actuator [LH]
5. Shower duct [LH]
6. Duct sensor [Floor]
7. PTC Heater
8. Duct sensor [Vent]
9. Heater & Evaporator lower case
10. Heater case [LH]
11. Air guide [LH]
12. Heater unit pad
13. Center duct seal
14. Deforster door assembly
15. Vent door assembly
16. Floor door assembly
17. Console vent door assembly
18. Console floor door assembly
19. Vent guide
20. Drain hose
21. Separator
22. Air guide [RH]
23. Heater case [RH]
24. Evaporator core assembly
25. Auto defogging actuator
26. Mode actuator [RH]
27. Temperature control actuator [RH]
28. Evaporator temperature sensor
29. Shower duct [RH]



## Replacement

**CAUTION**

When prying with a flat-tip screwdriver or use a prying trim tool, wrap it with protective tape, and apply protective tape around the related parts, to prevent damage.

1. Disconnect the negative (-) battery terminal.
2. Recover the refrigerant with a recovery / recycling / charging station.

**WARNING**

- If the POE oil of the system gets mixed with PAG oil, then dielectric breakdown due to decreased volumetric resistivity can occur and inoperative A/C compressor may result, A/C compressor may not work.

3. When the engine is cool, drain the engine coolant from the radiator.
   (Refer to Engine Mechanical System - "Coolant")
4. Remove the cowl top cover.
   (Refer to Body - "Cowl Top Cover")
5. Remove the bolts and the expansion valve (A) from the evaporator core.

   **Tightening torque**:
   8.8 - 13.7 N.m (0.9 - 1.4 kgf.m, 6.5 - 10.1 lb-ft)

**NOTICE**

- Plug or cap the lines immediately after disconnecting them to avoid moisture and dust contamination.
- When installing, replace with a new O-ring.

6. Disconnect the heater hoses (A) from the heater unit.

**CAUTION**

- Engine coolant will run out when the hoses are disconnected; drain it into a clean drip pan. Be sure not to let coolant spill on electrical parts or painted surfaces. If any coolant spills, rinse it off immediately.

7. Loosen the cowl cross member mounting bolts.

8. Remove the floor console assembly.
   (Refer to Body - "Floor Console Assembly")
9. Remove the crash pad lower panel.
   (Refer to Body - "Crash Pad Lower Panel")
10. Remove both sides of the front pillar trim.
    (Refer to Body - "Front Pillar Trim")
11. Remove the cowl side trim.
    (Refer to Body - "Cowl Side Trim")
12. Remove the steering column shroud lower panel.
    (Refer to Body - "Steering Column Shroud Panel")
13. Remove the steering wheel.
    (Refer to Steering System - "Steering Wheel")

14. Remove the multifunction switch.
    (Refer to Body Electrical System - "Multifunction Switch")
15. Lower the steering column after loosening the mounting bolts.
    (Refer to Steering System - "Steering Column and Shaft")
16. Remove the shift lever assembly.
    (Refer to Automatic Transmission System - "Shift Lever")
17. Remove the crash pad under cover [RH](A).

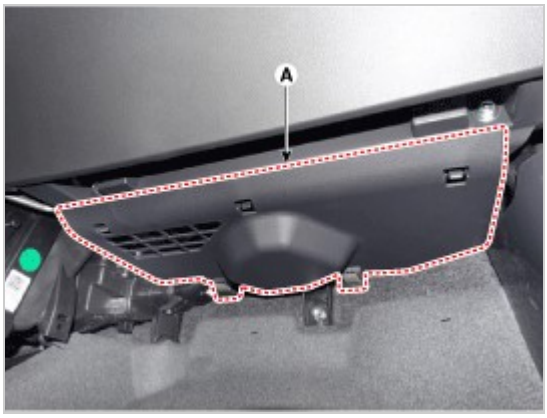


18. Remove the rear air duct (A).

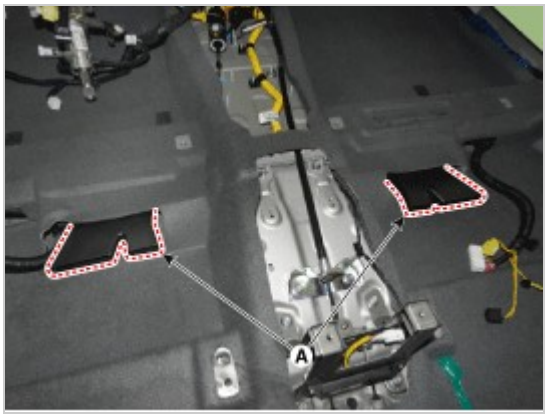


19. Separate the floor carpet (A) to obtain space for removing the rear heating duct.

20. Loosen the mounting nuts and remove the front air duct (A).

21. Disconnect the airbag control module (SRSCM) connector (A).

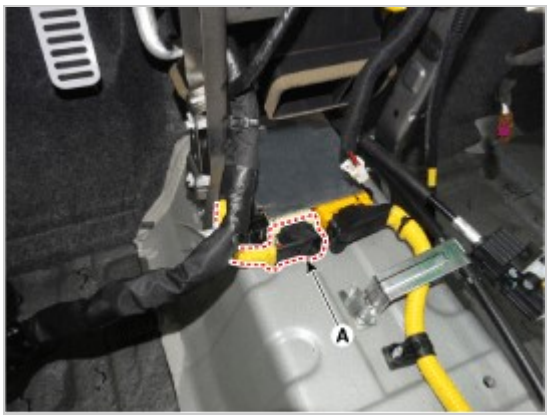


22. Disconnect the junction box connectors (A).

23. Disconnect the multi box connectors (A).
**[Driver"s side]**

**[Passenger"s side]**

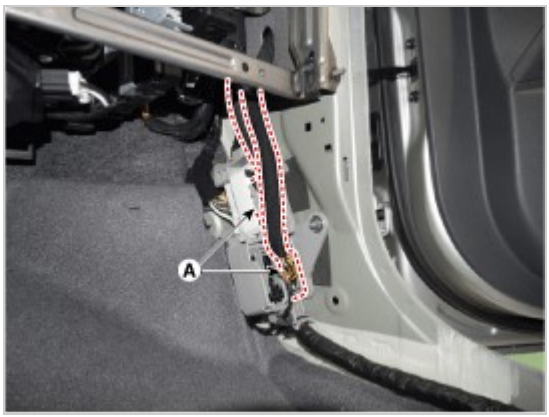


24. Disconnect the connectors (A) and the mounting clips in the front pillar.
**[Driver"s side]**

**[Passenger"s side]**

25. Remove the drain hose (A).

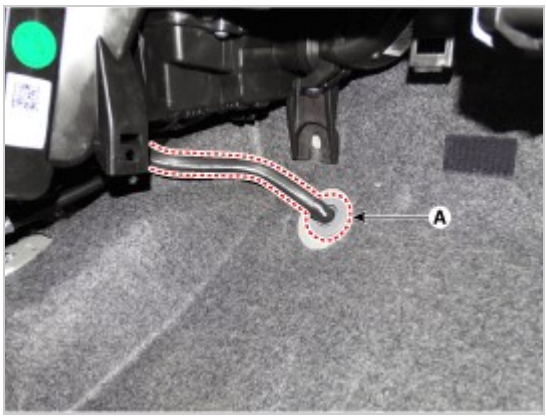


26. Loosen the cowl blower unit mounting bolts.

**Tightening torque :**
3.9 - 5.9 N.m (0.4 - 0.6 kgf.m, 2.9 - 4.3 lb-ft)

27. After loosening the bolts and nuts remove the main crash pad and cowl cross bar assembly (A) together.

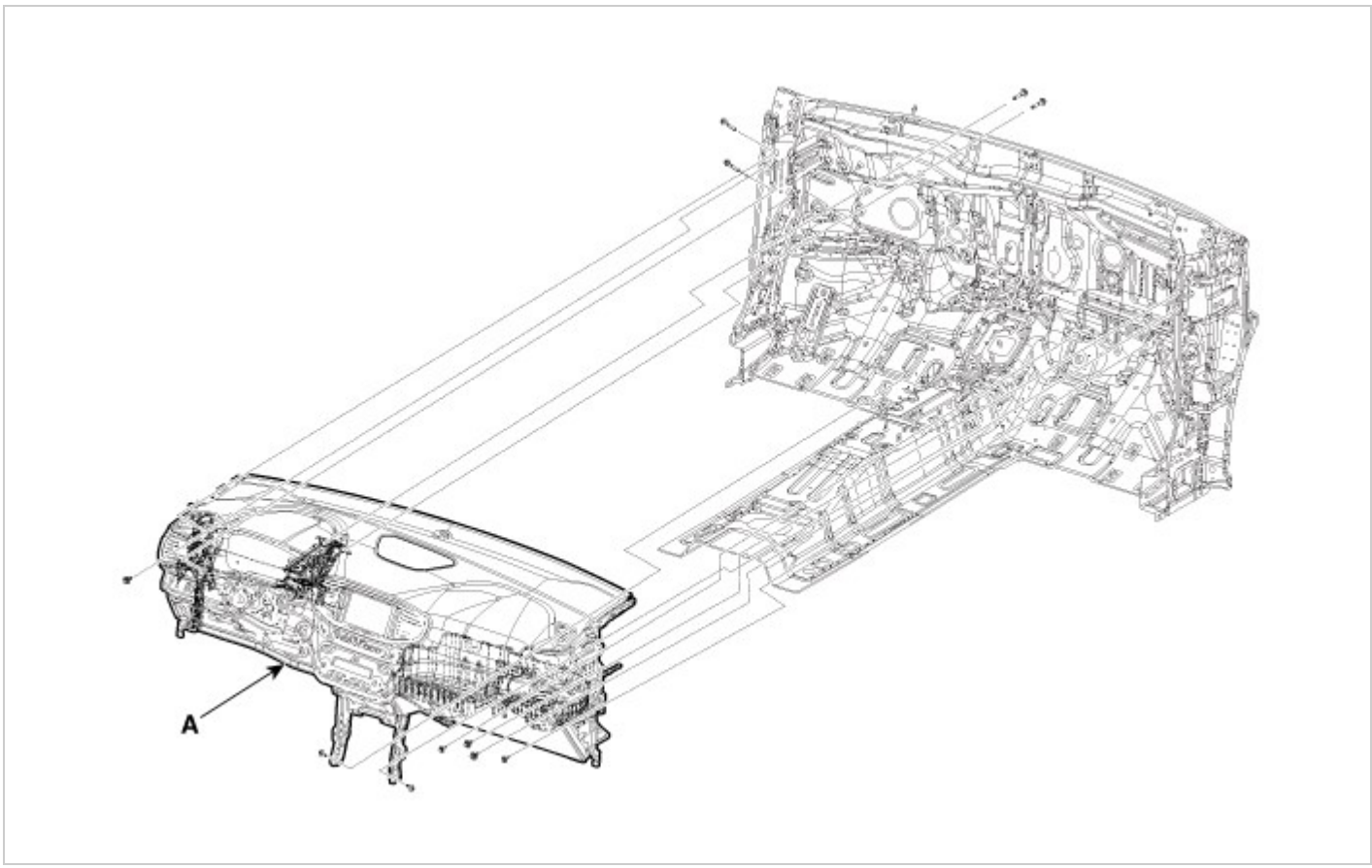


28. Disconnect the heater & blower unit connectors.
    (1) Disconnect the auto defogging actuator connector (A), passenger''s side mode control actuator connector (B) and remove the wiring mounting clips.

    (2) Disconnect the duct sensor (A), driver''s temperature control actuator (B), mode control actuator (C) and remove the wiring mounting clips.

(3) Disconnect the blower motor connector (A) and remove the wiring mounting clips.

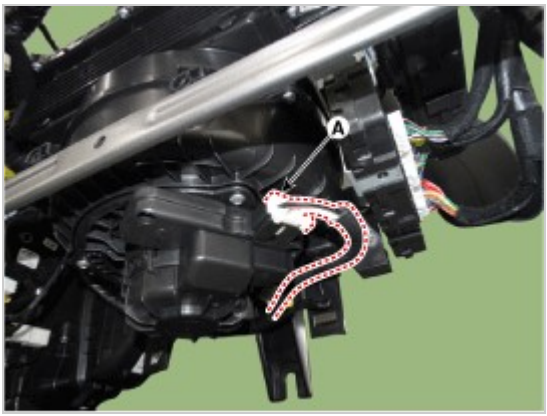


(4) Disconnect the passenger"s side temperature control actuator (A), evaporator temperature sensor connector (B), intake actuator connector (C) and remove the wiring mounting clips.

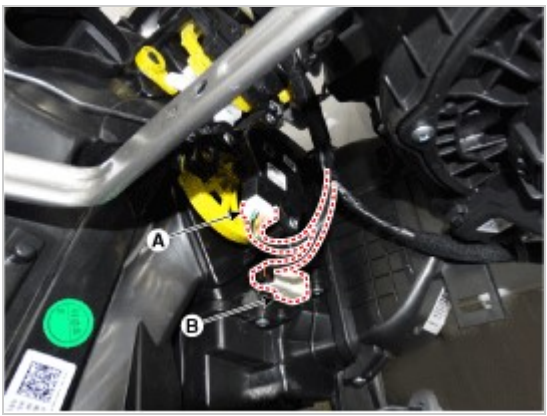


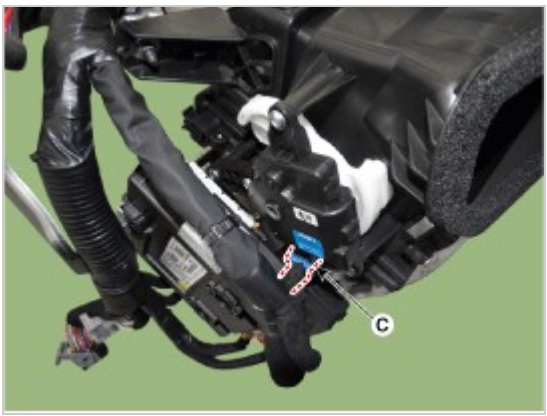


29. Loosen the heater & blower unit mounting bolt (A).

**Tightening torque :**
3.9 - 5.9 N.m (0.4 - 0.6 kgf.m, 2.9 - 4.3 lb-ft)

30. Remove the heater and blower unit (A) from the crash pad after loosening the mounting nuts.

**Tightening torque :**
3.9 - 5.9 N.m (0.4 - 0.6 kgf.m, 2.9 - 4.3 lb-ft)

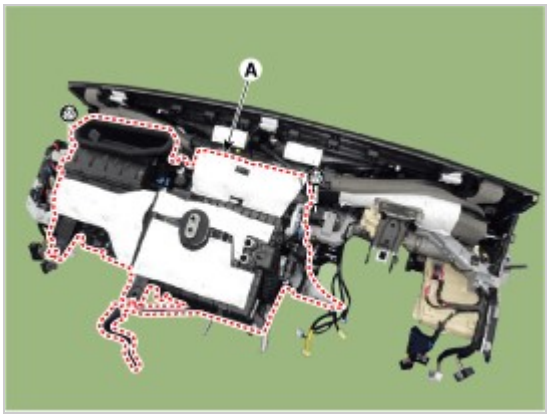


31. Separate the blower unit (B) from the heater unit (A) after loosening the screws.

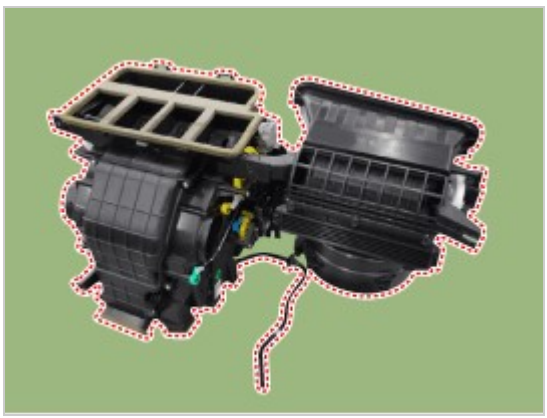

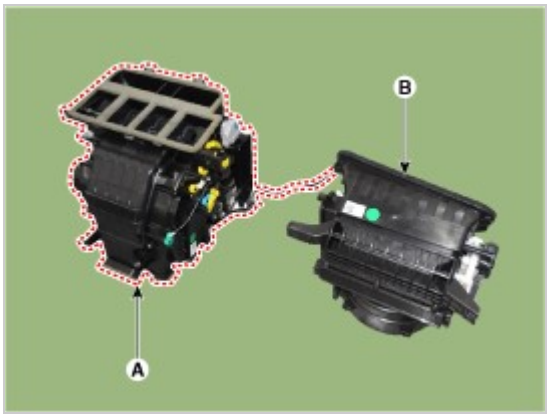


32. To install, reverse the removal procedure.

**Heating, Ventilation and Air Conditioning**

## Replacement

1. Disconnect the negative (-) battery terminal.
2. Remove the heater and blower assembly.
   (Refer to Heater - "Heater Unit")
3. Loosen the mounting screws and remove the driver"s temperature control actuator (A).

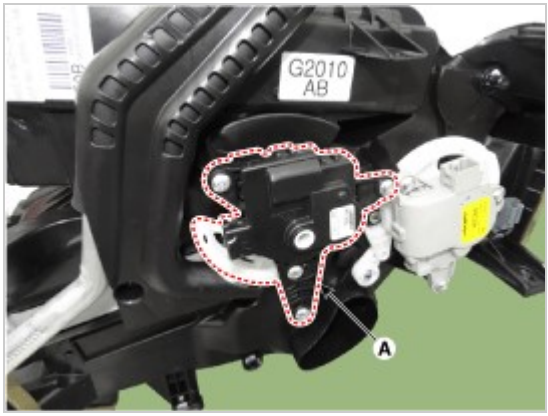


4. Remove the heater core cover (A) after loosening the mounting screws.

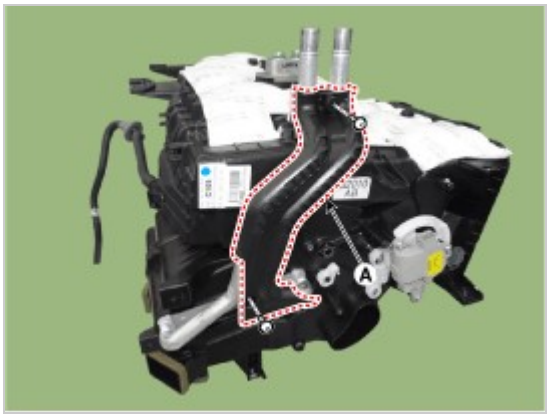


5. Pull out the heater core (A) from the heater unit.

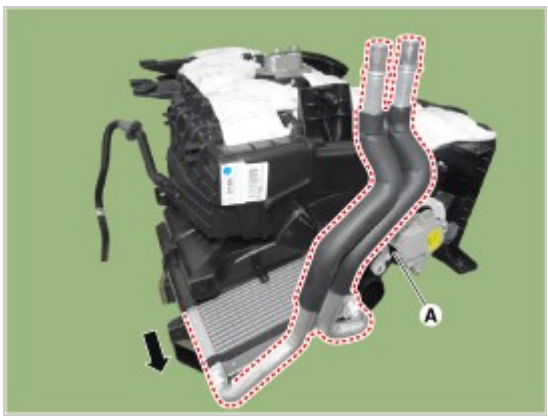


6. To install, reverse the removal procedure.

**NOTICE**

- If you"re installing a new condenser, add refrigerant oil (POE OIL).
- Replace the O-rings with new ones at each fitting, and apply a thin coat of refrigerant oil before installing them. Be sure to use the right O-rings for R-134a to avoid leakage.
- Be careful not to damage the radiator and condenser fins when installing the condenser.
- Charge the system, and test its performance.



## Description

The PTC (Positive Temperature Coefficient) heater is installed at the exit or the backside of heater core.

The PTC heater is an electric heater using a PTC element as an auxiliary heating device that supplements deficiency of interior heat source in highly effective diesel engine. The electric heater heats up the interior by directly heating the air that passes through the heater. The name itself implies that the element has a proportional resistance change sensitive to temperature.

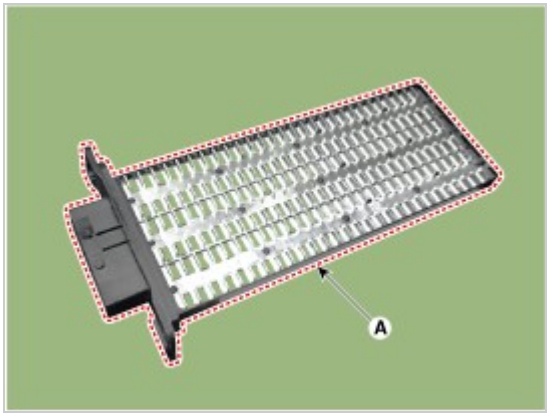


## Operation Principle

ECM outputs a PTC ON signal and operates PTC relay 1. Then heater controller operates PTC relay 2 and PTC relay 3 with an interval of 15 seconds.
However, PTC relay 3 can be operated while battery voltage is above 12.4V.

## Operating Condition

PTC heater operates according to the following conditions;

- Battery voltage: 12.4V or above
- Engine : Running
- Ambient temperature and coolant temperature

| Ambient Temperature | Coolant Temperature | PTC Operation |
|---|---|---|
| Below -20°C (-4°F) | Below 75°C (167°F) | ON |
| 10°C (504°F) | Below 65°C (149°F) | ON |
| 12°C (53.6°F) or above | - | OFF |
| - | 80°C (176°F) or above | OFF |

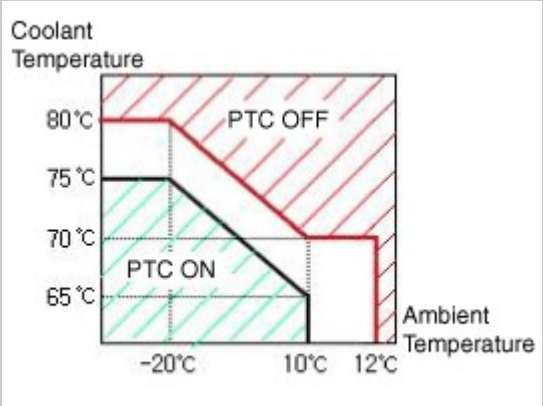




## Inspection

## Operating Logic Test (Manual only)

Inspect the PTC operation by confirmation logic as follows.

1. Entering
   (1) Set the Floor mode and maximum heating position.
   (2) Turn off the blower switch.
   (3) Press the intake (recirculation) button 5 times or more.
   (4) \Indicators of intake and A/C button are continuously flashed with an interval of 0.5 seconds.
   (5) Confirm the PTC operation by turn on the blower switch.
   (6) Each PTC relay is operated with an interval of 3 seconds.
   (7) The logic test will be automatically cancelled after 30 seconds.
   In addition, it can be cancelled by followings.
   - Select A/C or intake (recirculation) switch
   - Ignition switch OFF

2. Cancellation
   - Select A/C or intake (recirculation) switch.
   - Turn the ignition switch OFF.
   - The test is cancelled automatically after 30 seconds.
3. If the PTC is not operated, substitute with a known-good PTC heater and check for proper operation.
   If the problem is corrected, replace the PTC heater.

## Operating Test

This test should be performed in the PTC ON conditions.

1. Run the engine.
2. Check the current on wiring with a clamp multi tester.

| Pattern | Current (A) |
|---|---|
| PTC 1 ON | 0.1 - 33 |
| PTC 2 ON | 0.1 - 33 |
| PTC 3 ON | 0.1 - 33 |
| Total | 0.1 - 100 |

3. If the current is not specification, inspect related wiring.

## Resistance Test

1. Turn the ignition switch OFF.
2. Disconnect the PTC heater connector.
3. Measure the resistance between terminal 1, 2, 3 of PTC heater and ground line.
   **Resistance :**0.3 - 1.5 Ω

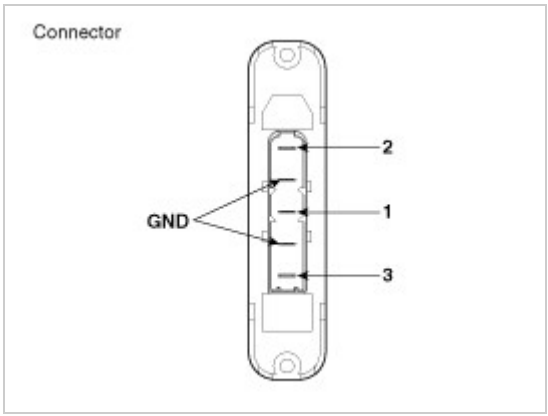


   1) PTC 1
   2) PTC 2
   3) PTC 3
4. If the measured resistance is not specification, replace the PTC heater with new one.

### Replacement

1. Disconnect the negative (-) battery terminal.
2. Remove the floor console side cover.
   (Refer to Body - "Floor Console Assembly")
3. Disconnect the duct sensor connector (A).
4. Remove the driver"s side shower duct (B) after loosening the screw.

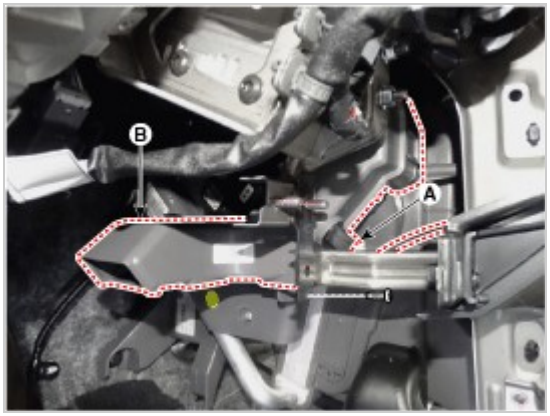


5. Disconnect the PTC heater connector (A).

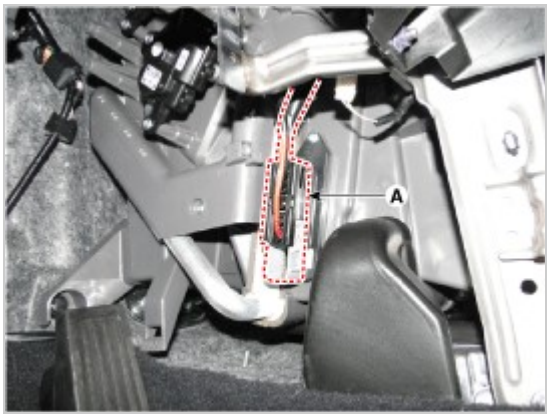


6. Remove the PTC heater core (A) after loosening the PTC heater mounting screws.

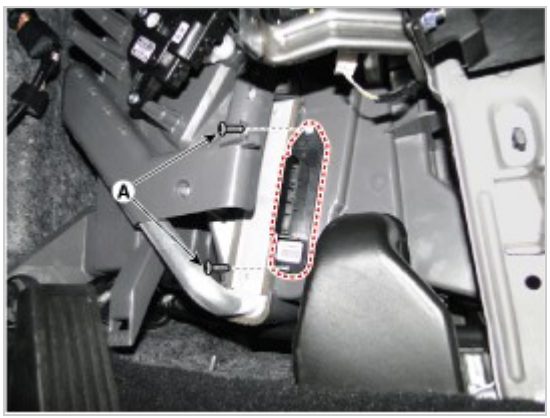


7. To install, reverse the removal procedure.



## Replacement

1. Disconnect the negative (-) battery terminal.
2. Remove the heater and blower assembly.
   (Refer to Heater - "Heater Unit")
3. Remove the evaporator core cover (A) after loosening the mounting screws.

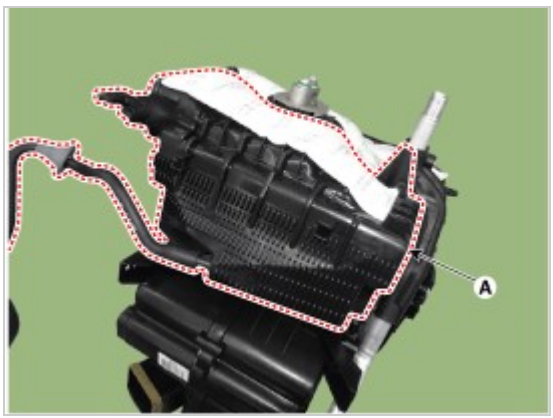


4. Pull out the evaporator temperature sensor (A) from the evaporator core.

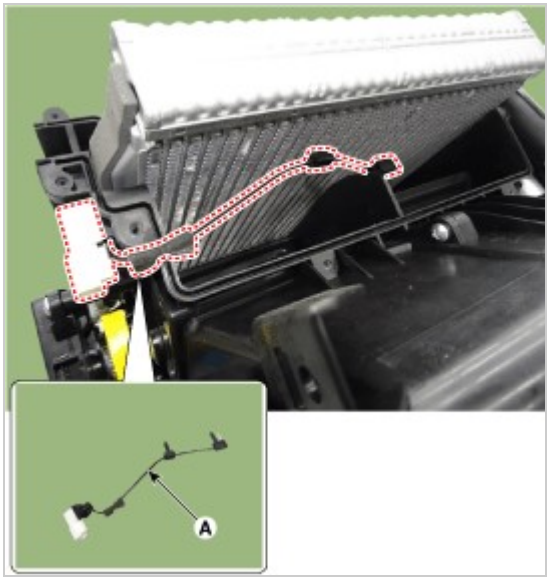


5. Pull out the evaporator core (A) from the heater unit.

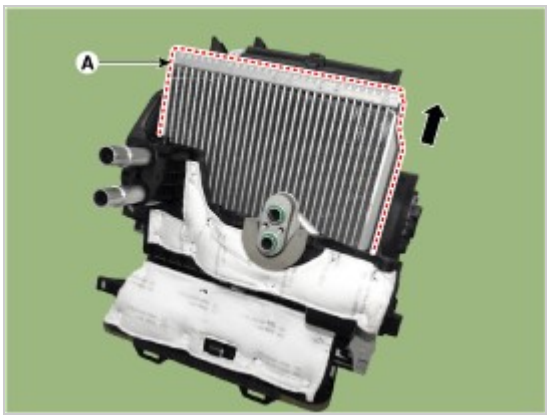


6. To install, reverse the removal procedure.

**NOTICE**

- If you"re installing a new condenser, add refrigerant oil (POE OIL).
- Replace the O-rings with new ones at each fitting, and apply a thin coat of refrigerant oil before installing them. Be sure to use the right O-rings for R-134a to avoid leakage.
- Be careful not to damage the radiator and condenser fins when installing the condenser.
- Charge the system, and test its performance.



## Components Location

1. Temperature control actuator [LH]
2. Temperature control actuator [RH]

**Heating, Ventilation and Air Conditioning**

## Description

The temperature control actuator is located at the heater unit. It regulates the temperature by the procedure as follows.

The signal from the control unit adjusts the position of the temperature door by operating the temperature switch. Then the temperature will be regulated by the hot/cold air ratio decided by the position of the temperature door.

**Heating, Ventilation and Air Conditioning**

## Specifications

| Door Position | Voltage (V) | Error Detecting |
|---|---|---|
| Vent | 0.3 ± 0.15 | Low voltage : 0.1V or less<br>High voltage : 4.9V or more |
| Defrost | 4.7 ± 0.15 | |

**Heating, Ventilation and Air Conditioning**

## Inspection

1. Turn the ignition switch OFF.
2. Disconnect the temperature control actuator connector.

3. Verify that the temperature control actuator operates to the cool position when connecting 12V to terminal 3 and grounding terminal 7.
   Verify that the temperature control actuator operates to the warm position when connected in reverse.

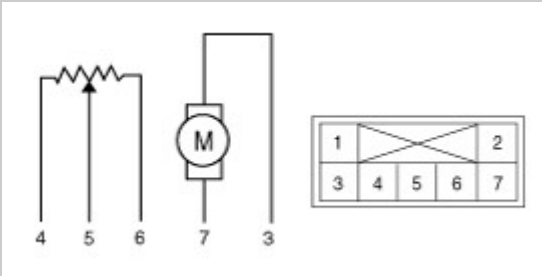


| Pin NO | Function |
|---|---|
| 1 | - |
| 2 | - |
| 3 | Cool position |
| 4 | Sensor (+5V) |
| 5 | Feedback signal |
| 6 | Sensor ground |
| 7 | Warm position |

4. Connect the temperature control actuator connector.
5. Turn the ignition switch ON.
6. Check the voltage between terminal 5 and 6.
7. If the measured voltage is not within specification, check the operation by replacing the existing temperature control actuator with a new genuine part. After that, determine whether replacement of the temperature control actuator is required or not.

## Diagnosis With GDS

1. The heating, ventilation and air conditioning can be quickly diagnosed failed parts with vehicle diagnostic system (GDS).
   ※ The diagnostic system (GDS) provides the following information.
   (1) Self diagnosis : Checking the failure code (DTC) and display.
   (2) Current data : Checking the system input/output data state.
   (3) Actuation test : Checking the system operation condition.
   (4) Additional function : Other controlling such as he system option and zero point adjustment.
2. Select the "Car model" and the system to be checked in order to check the vehicle with the tester.
3. Select the "Current data" menu to search the current state of the input / output data.
   The input / output data for the sensors corresponding to the Temperature Control Actuator can be checked.

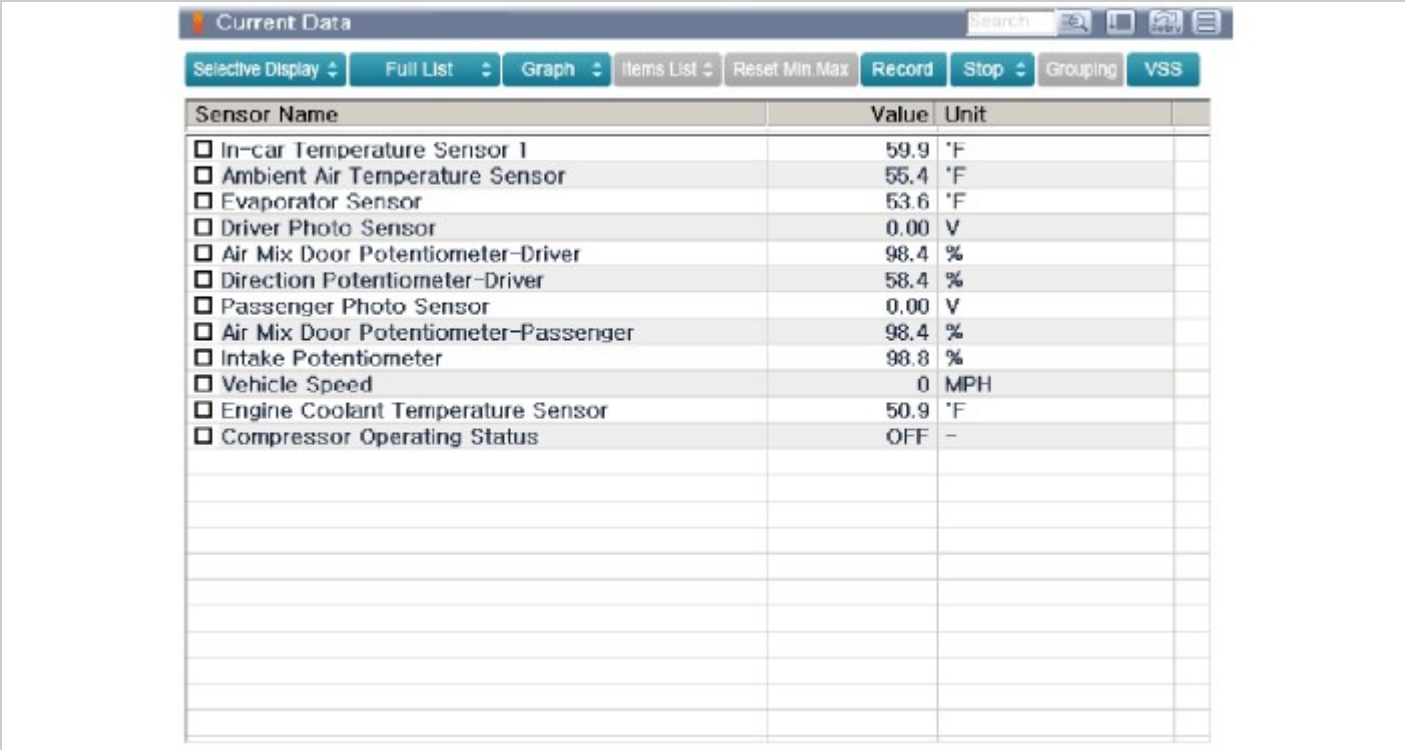


| Sensor Name | Value | Unit |
|---|---|---|
| In-car Temperature Sensor 1 | 59.9 | °F |
| Ambient Air Temperature Sensor | 55.4 | °F |
| Evaporator Sensor | 53.6 | °F |
| Driver Photo Sensor | 0.00 | V |
| Air Mix Door Potentiometer-Driver | 98.4 | % |
| Direction Potentiometer-Driver | 58.4 | % |
| Passenger Photo Sensor | 0.00 | V |
| Air Mix Door Potentiometer-Passenger | 98.4 | % |
| Intake Potentiometer | 98.8 | % |
| Vehicle Speed | 0 | MPH |
| Engine Coolant Temperature Sensor | 50.9 | °F |
| Compressor Operating Status | OFF | - |

4. To perform compulsory operation on Temperature Control Actuator input factors, select "ACTUATION TEST".

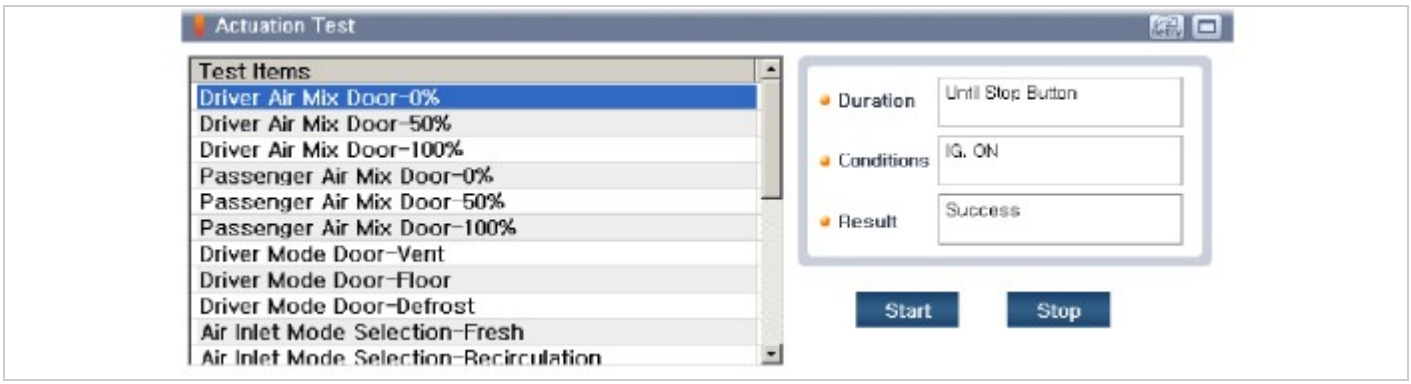


## Replacement

## [Driver"s side]

1. Disconnect the negative (-) battery terminal.
2. Remove the crash pad lower panel.
   (Refer to Body - "Crash Pad Lower Panel")
3. Remove the driver"s side shower duct (A) after loosening the screw.

4. Disconnect the connector (A) and then remove the driver"s side temperature control actuator (B) after loosening the mounting screws.

5. To install, reverse the removal procedure.

## [Passenger"s side]

1. Disconnect the negative (-) battery terminal.
2. Remove the glove box upper cover assembly.
   (Refer to Body - "Glove Box Upper Cover Assembly")
3. Remove the passenger"s side shower duct (A) after loosening the screw.

4. Disconnect the connector (A) and then remove the passenger''s side temperature control actuator (B) after loosening the mounting screws.

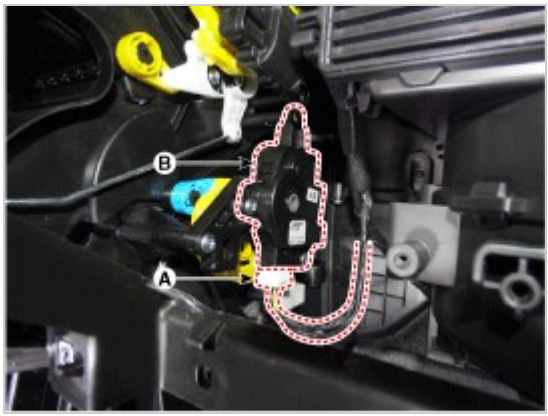


5. To install, reverse the removal procedure.



## Components Location

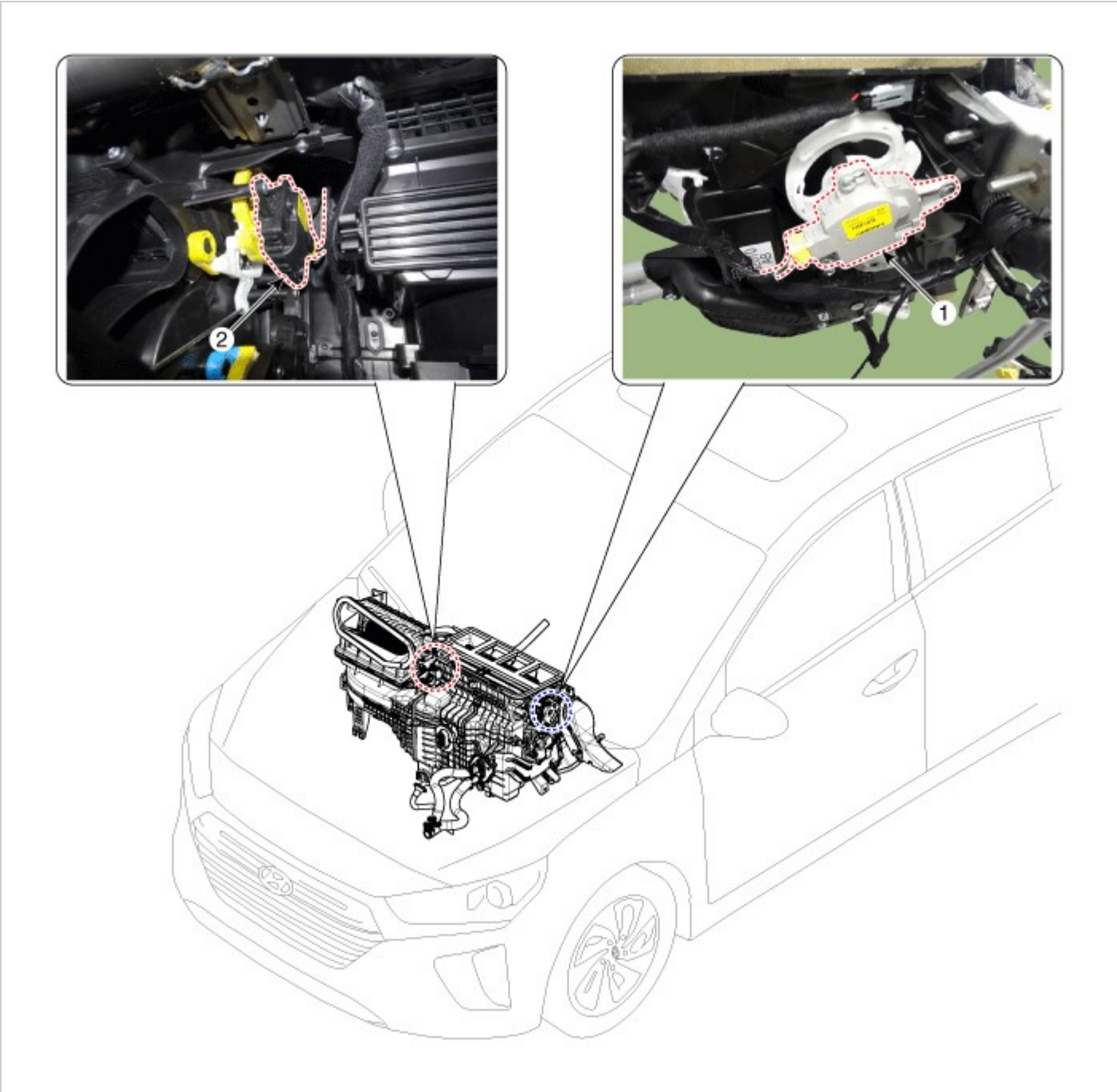


1. Mode control actuator [LH]
2. Mode control actuator [RH]

**Heating, Ventilation and Air Conditioning**

## Description

The mode control actuator is located at the heater unit.

It adjusts the position of the mode door by operating the mode control actuator based on the signal of the A/C control unit. Pressing the mode select switch makes the mode control actuator shift in order of Vent → Bi-Level → Floor → Mix.

**Heating, Ventilation and Air Conditioning**

## Specifications

| Door position | Voltage (V) | Error detecting |
|---|---|---|
| Vent | 0.3 ± 0.15 | Low voltage : 0.1V or less<br>High voltage : 4.9V or more |
| Defrost | 4.7 ± 0.15 | |

**Heating, Ventilation and Air Conditioning**

## Inspection

1. Turn the ignition switch OFF.
2. Disconnect the mode control actuator connector.
3. Verify that the mode control actuator operates to the defrost mode when connecting 12V to terminal 3 and grounding terminal 4.

Verify that the mode control actuator operates to the vent mode when connected in reverse.

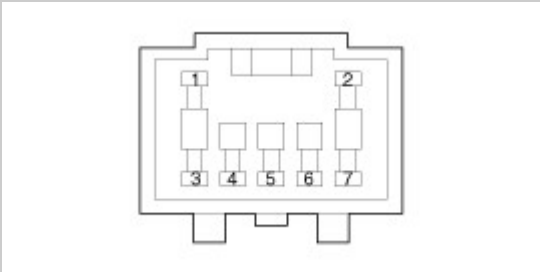


| Pin NO | Function |
|---|---|
| 1 | - |
| 2 | - |
| 3 | Vent mode |
| 4 | Sensor (+5V) |
| 5 | Feedback signal |
| 6 | Sensor ground |
| 7 | Defrost mode |

4. Connect the mode control actuator connector.
5. Turn the ignition switch ON.
6. Check the voltage between terminal 6 and 5.
7. If the measured voltage is not within specification, check the operation by replacing the existing mode control actuator with a new genuine part. After that, determine whether replacement of the temperature control actuator is required or not.

## Diagnosis With GDS

1. The heating, ventilation and air conditioning can be quickly diagnosed failed parts with vehicle diagnostic system (GDS).
   ※ The diagnostic system (GDS) provides the following information.
   (1) Self diagnosis : Checking the failure code (DTC) and display.
   (2) Current data : Checking the system input/output data state.
   (3) Actuation test : Checking the system operation condition.
   (4) Additional function : Other controlling such as he system option and zero point adjustment.
2. Select the "Car model" and the system to be checked in order to check the vehicle with the tester.
3. Select the "Current data" menu to search the current state of the input / output data.
   The input / output data for the sensors corresponding to the Mode Control Actuator can be checked.

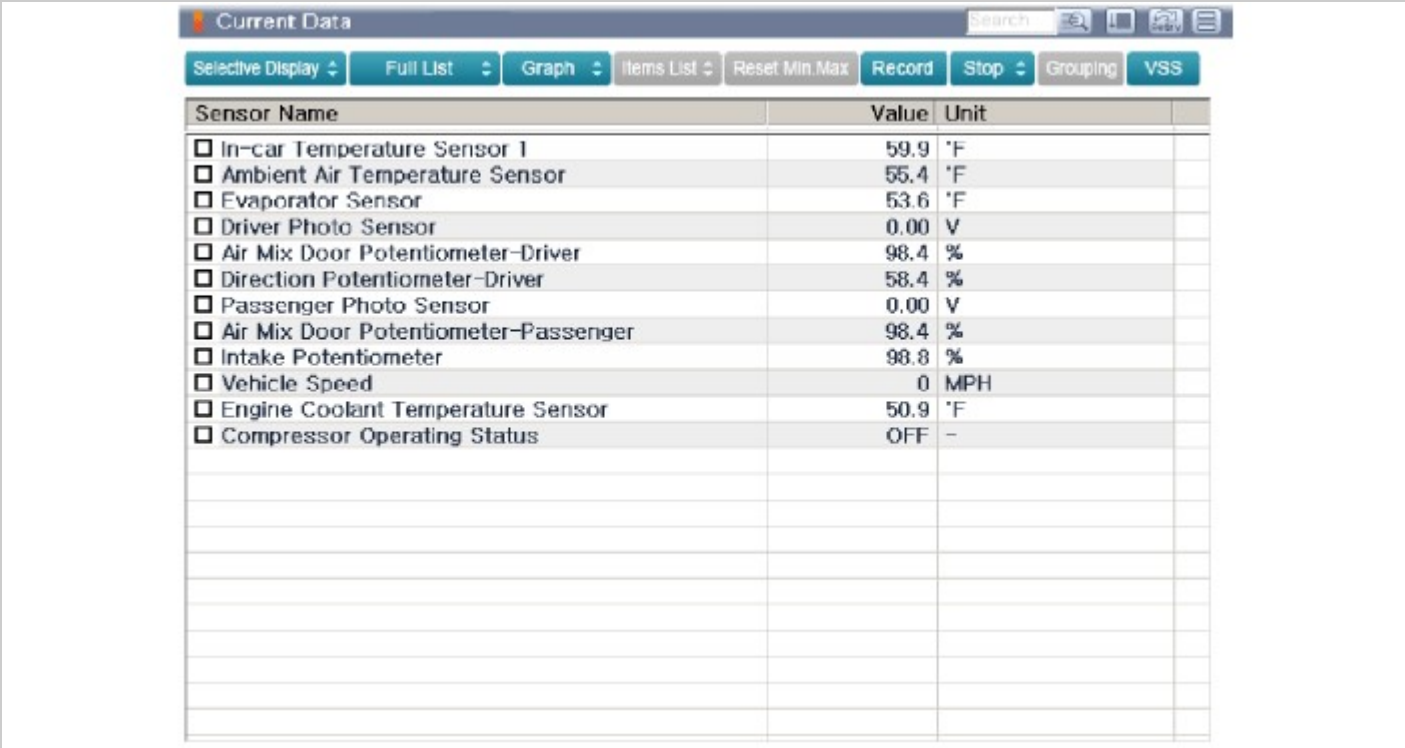


| Sensor Name | Value | Unit |
|---|---|---|
| In-car Temperature Sensor 1 | 59.9 | °F |
| Ambient Air Temperature Sensor | 55.4 | °F |
| Evaporator Sensor | 53.6 | °F |
| Driver Photo Sensor | 0.00 | V |
| Air Mix Door Potentiometer-Driver | 98.4 | % |
| Direction Potentiometer-Driver | 58.4 | % |
| Passenger Photo Sensor | 0.00 | V |
| Air Mix Door Potentiometer-Passenger | 98.4 | % |
| Intake Potentiometer | 98.8 | % |
| Vehicle Speed | 0 | MPH |
| Engine Coolant Temperature Sensor | 50.9 | °F |
| Compressor Operating Status | OFF | - |

4. To perform compulsory operation on Mode Control Actuator input factors, select "ACTUATION TEST".

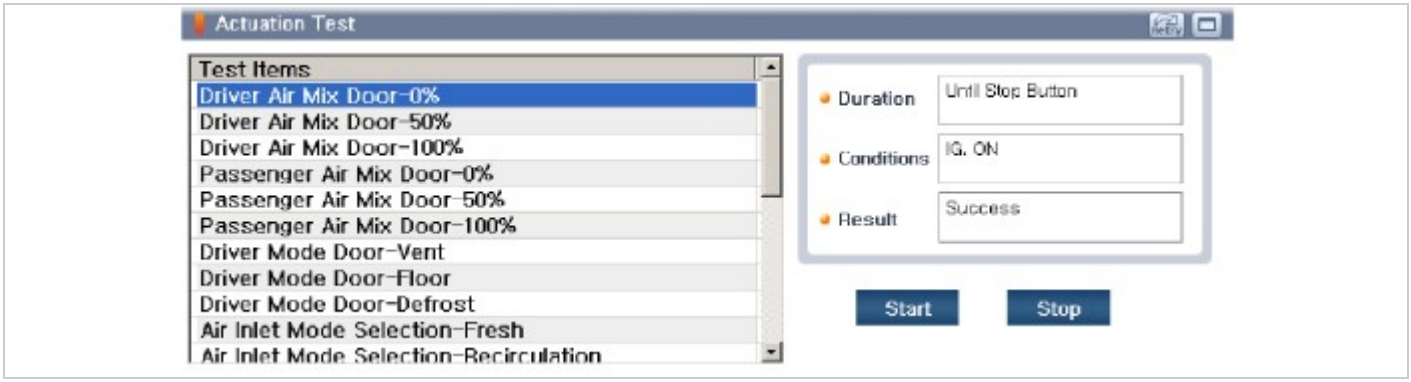


## Replacement

1. Disconnect the negative (-) battery terminal.
2. Remove the main crash pad assembly.
   (Refer to Body - "Main Crash Pad Assembly")
3. Disconnect the connector (A) and then remove the mode control actuator (B) after loosening the mounting screws.
   **[Driver"s side]**

**[Passenger"s side]**

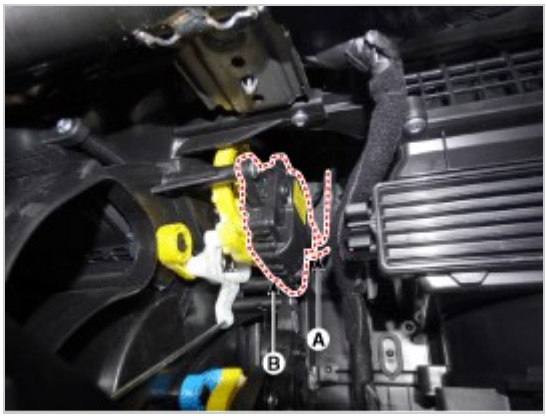


4. To install, reverse the removal procedure.

**Heating, Ventilation and Air Conditioning**

## Components Location

1. Auto logging actuator

**Heating, Ventilation and Air Conditioning**

## Description

The auto defogging sensor is installed on front window glass. The sensor judges and sends signal if moisture occurs to blow out wind for defogging. The air conditioner control module receives a signal from the sensor and restrains moisture and eliminates defog by the intake actuator, A/C, auto defogging actuator, blower motor rpm and mode actuator.

**Heating, Ventilation and Air Conditioning**

## Specifications

| Door position | Voltage (V) | Error detecting |
|---|---|---|
| Close | 0.3 ± 0.15 | Low voltage : 0.1V or less<br>High voltage : 4.9V or more |
| Open | 4.7 ± 0.15 | |

**Heating, Ventilation and Air Conditioning**

## Inspection

1. Turn the ignition switch OFF.
2. Disconnect the auto defogging connector.
3. Verify that the auto defogging actuator operates to the open position when connecting 12V to terminal 3 and grounding terminal 4.
   Verify that the auto defogging actuator operates to the close position when connected in reverse.

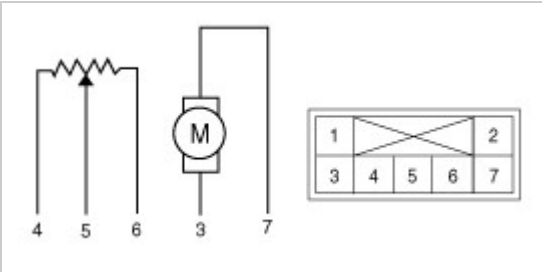


| Pin NO | Function |
|---|---|
| 1 | - |
| 2 | - |
| 3 | Open |
| 4 | Sensor (+5V) |
| 5 | Feedback signal |
| 6 | Sensor ground |
| 7 | Off |

4. Connect the auto defogging actuator connector.
5. Turn the ignition switch ON.
6. Check the voltage between terminals 6 and 5.
7. If the measured voltage is not within specification, check the operation by replacing the existing auto defogging actuator with a new genuine part. After that, determine whether replacement of the auto defogging actuator is required or not.

## Diagnosis With GDS

1. The heating, ventilation and air conditioning can be quickly diagnosed failed parts with vehicle diagnostic system (GDS).
   ※ The diagnostic system (GDS) provides the following information.
   (1) Self diagnosis : Checking the failure code (DTC) and display.
   (2) Current data : Checking the system input/output data state.
   (3) Actuation test : Checking the system operation condition.
   (4) Additional function : Other controlling such as he system option and zero point adjustment.
2. Select the "Car model" and the system to be checked in order to check the vehicle with the tester.
3. Select the "Current data" menu to search the current state of the input / output data.
   The input / output data for the sensors corresponding to the Auto Defogging Actuator can be checked.

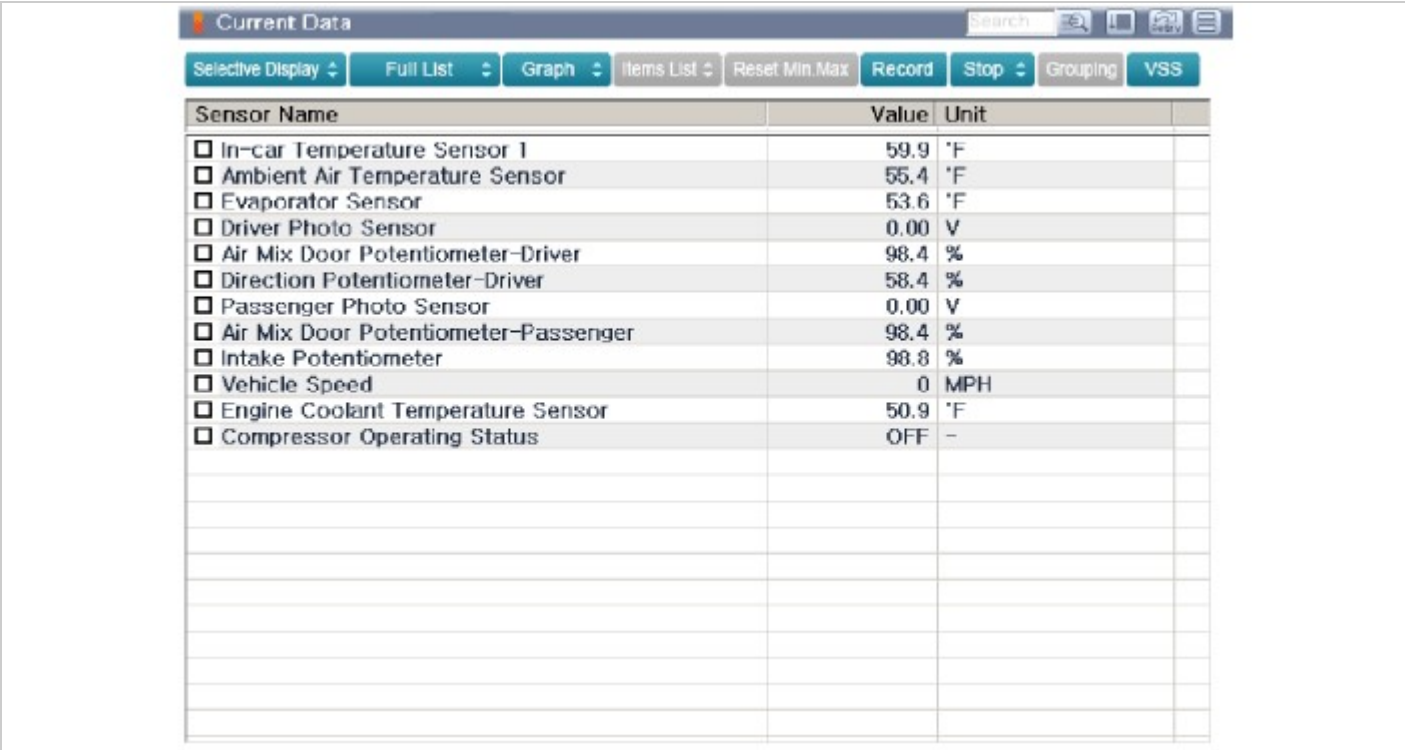


4. To perform compulsory operation on Auto Defogging Actuator input factors, select "ACTUATION TEST".

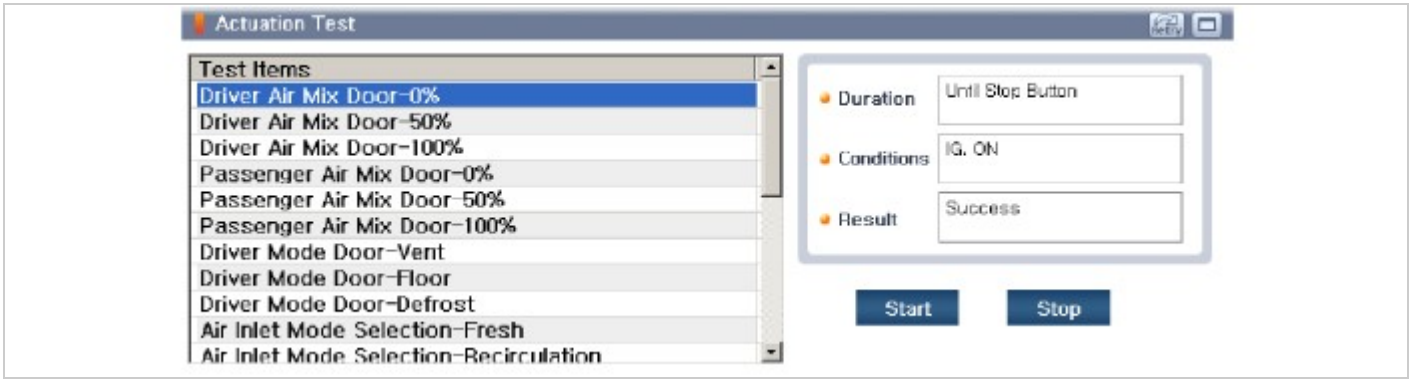


## Replacement

1. Disconnect the negative (-) battery terminal.
2. Remove the main crash pad assembly.
   (Refer to Body - "Main Crash Pad Assembly")
3. Disconnect the connector (A) and then remove the auto defogging actuator (B) after loosening the mounting screws.

4. To install, reverse the removal procedure.

**Heating, Ventilation and Air Conditioning**

## Description

In ordinary cars, the mechanical water pump mounted on the engine for heating purposes is activated to circulate the cooling water, but in hybrid cars, AEWP is used to circulate the cooling water when the engine is not operating.

| Classification | System | Cooling water used | | | Mechanical water pump | AEWP | Purpose of use | Note (role of AEWP) |
|---|---|---|---|---|---|---|---|---|
| | | Engine | Heater | WHRS | | | | |
| While Engine is working (AEWP activated) | 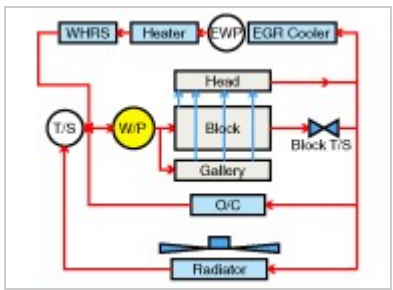  | O | O | O | On | Off | Cooling engine (main function) | - |
| | | | | | | | Heating | - |
| | | | | | | | Exhaust heat recovery and WHRS cooling | - |
| | | | | | | On | Fast warm-up while cooling or heating is turned on | Increased volume of cooling water circulation |
| Right after engine is turned off (EWP working) | 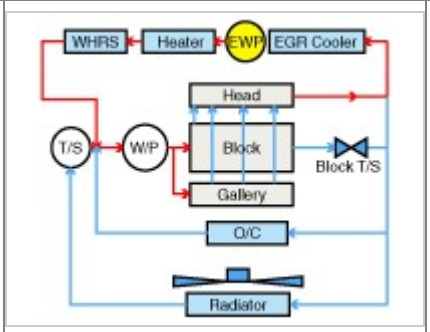  | X | O | O | Off | On | Heating | In the EV mode, the cooling water is circulated towards the heater. |
| | | | | | | | Cooling the exhaust heat recovery system | |

| | | | | | | | | |
|---|---|---|---|---|---|---|---|---|
| | | | | | | | | During key off, the cooling is supplied for the exhaust heat recovery system |



## Replacement

1. Remove the battery (-) terminal.
2. Remove the engine room under cover.
   (Refer to Engine Mechanical System - "Engine Room Under Cover")
3. Remove the heater hose (A) and AEWP hose (B).

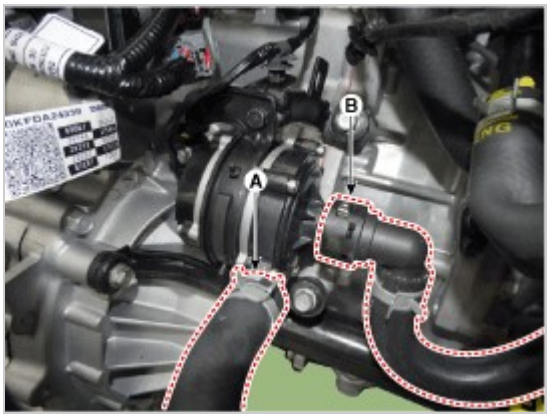


4. Disconnect the lock pin to remove the heater hose pump connector (A).

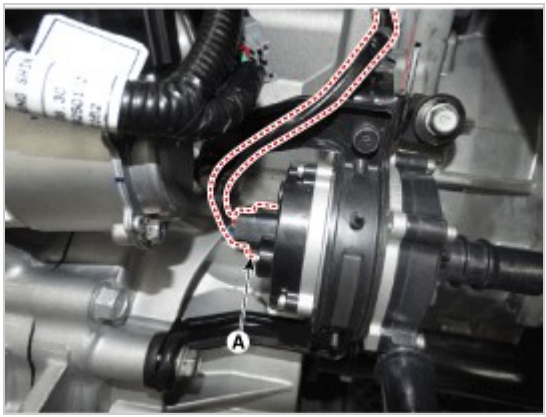


5. Loosen the mounting bolts and remove the AEWP (A).

**Tightening torque :**
18.6 - 21.6 N.m (1.9 - 2.2 kgf.m, 13.7 - 15.9 lb-ft)

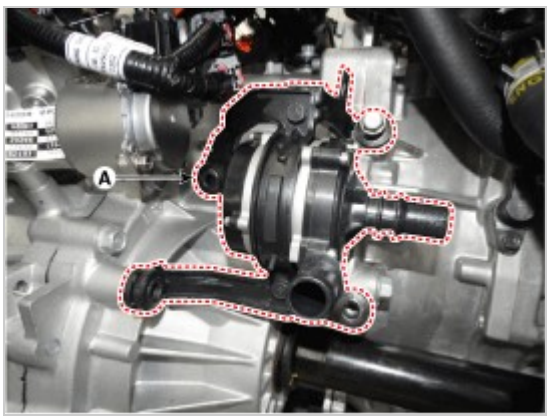


6. To install, reverse the removal procedure.

**NOTICE**

- During key off with the cooling water at high temperature, up to 40 seconds of AEWP noise is normal.

## Component Location

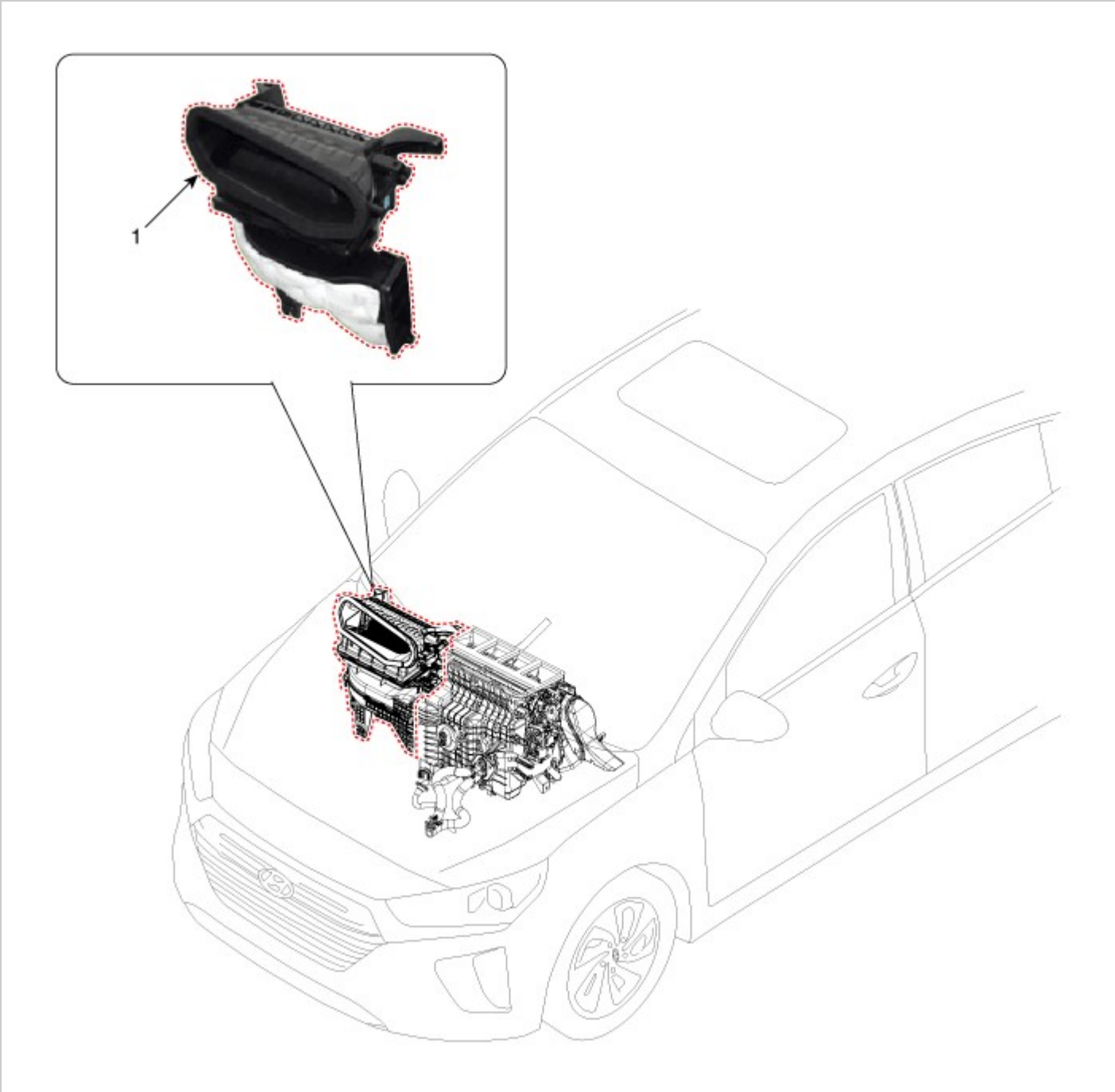


1. Blower unit assembly

## Components

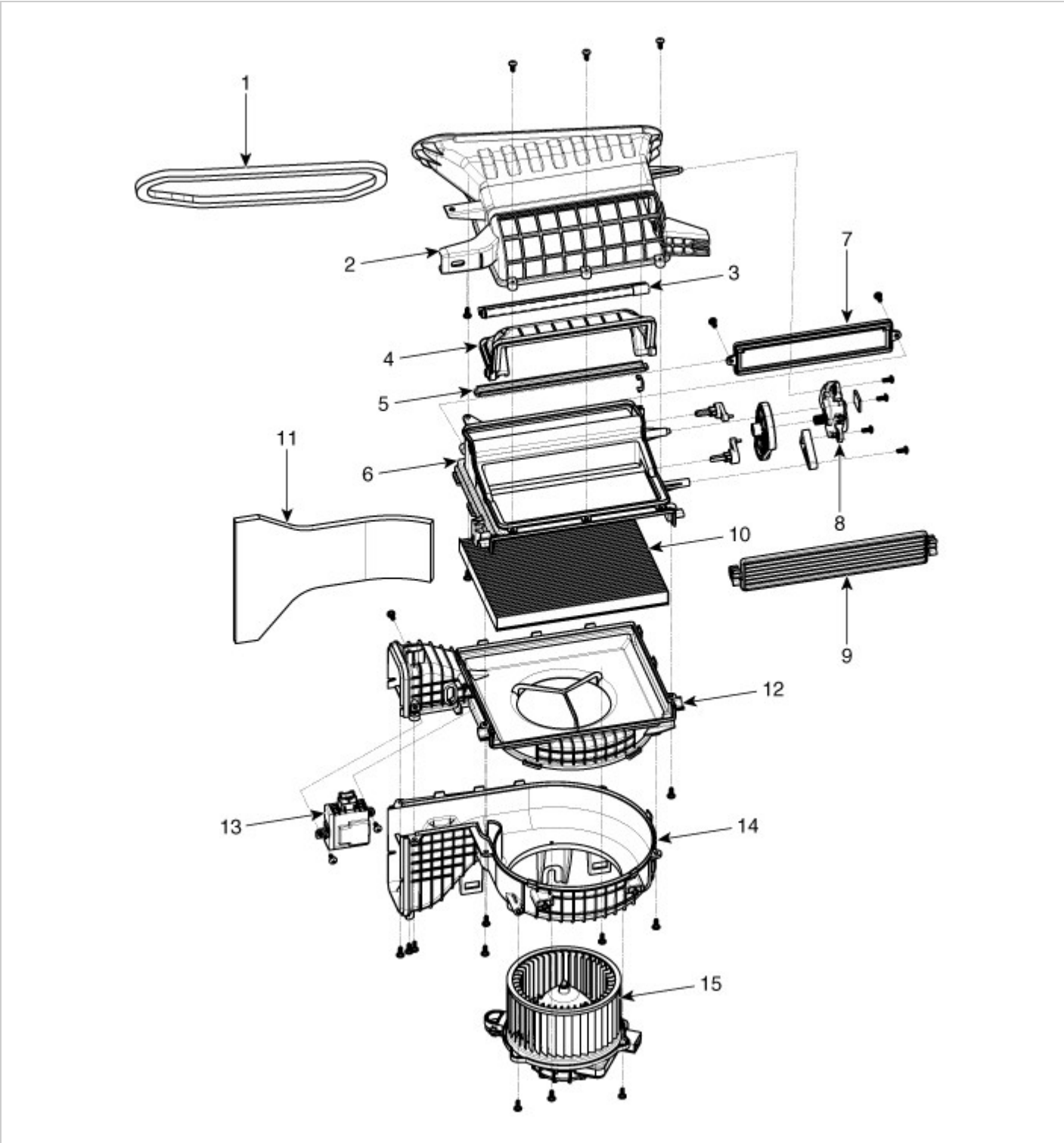


1. Duct Seal
2. Intake duct case
3. Air intake door assembly
4. Intake door
5. Seal
6. Intake duct case (A)
7. Air filter cover (A)
8. Intake actuator
9. Air filter cover
10. Air filter
11. Blower unit pad
12. Blower upper case
13. Cluster ionizer
14. Blower lower case
15. Blower motor



## Replacement

**⚠ CAUTION**

When prying with a flat-tip screwdriver or use a prying trim tool, wrap it with protective tape, and apply protective tape around the related parts, to prevent damage.

1. Disconnect the negative (-) battery terminal.
2. Recover the refrigerant with a recovery / recycling / charging station.

**WARNING**

- If the POE oil of the system gets mixed with PAG oil, then dielectric breakdown due to decreased volumetric resistivity can occur and inoperative A/C compressor may result, A/C compressor may not work.

3. When the engine is cool, drain the engine coolant from the radiator.
   (Refer to Engine Mechanical System - "Coolant")
4. Remove the cowl top cover.
   (Refer to Body - "Cowl Top Cover")
5. Remove the bolts and the expansion valve (A) from the evaporator core.

**Tightening torque**:
8.8 - 13.7 N.m (0.9 - 1.4 kgf.m, 6.5 - 10.1 lb-ft)

**NOTICE**

- Plug or cap the lines immediately after disconnecting them to avoid moisture and dust contamination.
- When installing, replace with a new O-ring.

6. Disconnect the heater hoses (A) from the heater unit.

**CAUTION**

- Engine coolant will run out when the hoses are disconnected; drain it into a clean drip pan. Be sure not to let coolant spill on electrical parts or painted surfaces. If any coolant spills, rinse it off immediately.

7. Loosen the cowl cross member mounting bolts.

8. Remove the floor console assembly.
   (Refer to Body - "Floor Console Assembly")

9. Remove the crash pad lower panel.
   (Refer to Body - "Crash Pad Lower Panel")
10. Remove both sides of the front pillar trim.
   (Refer to Body - "Front Pillar Trim")
11. Remove the cowl side trim.
   (Refer to Body - "Cowl Side Trim")
12. Remove the steering column shroud lower panel.
   (Refer to Body - "Steering Column Shroud Panel")
13. Remove the steering wheel.
   (Refer to Steering System - "Steering Wheel")
14. Remove the multifunction switch.
   (Refer to Body Electrical System - "Multifunction Switch")
15. Lower the steering column after loosening the mounting bolts.
   (Refer to Steering System - "Steering Column and Shaft")
16. Remove the shift lever assembly.
   (Refer to Automatic Transmission System - "Shift Lever")
17. Remove the crash pad under cover [RH](A).

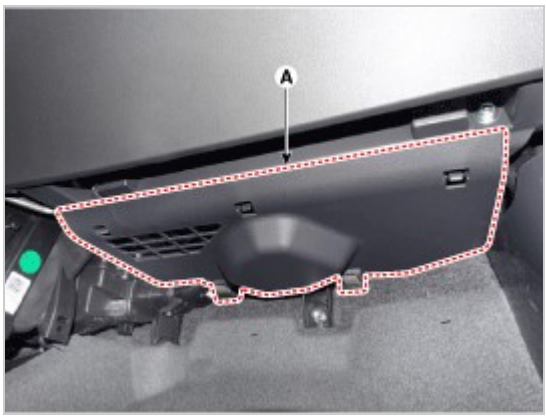


18. Remove the rear air duct (A).

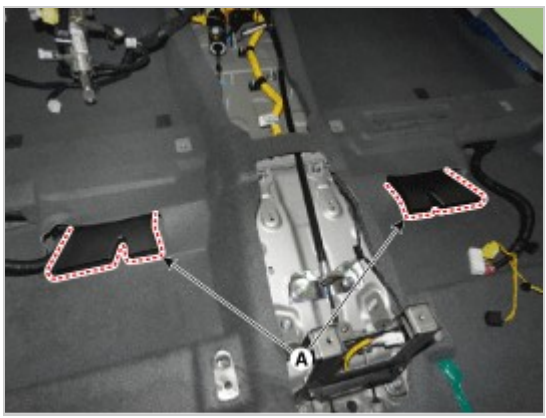


19. Separate the floor carpet (A) to obtain space for removing the rear heating duct.

20. Loosen the mounting nuts and remove the front air duct (A).

21. Disconnect the airbag control module (SRSCM) connector (A).

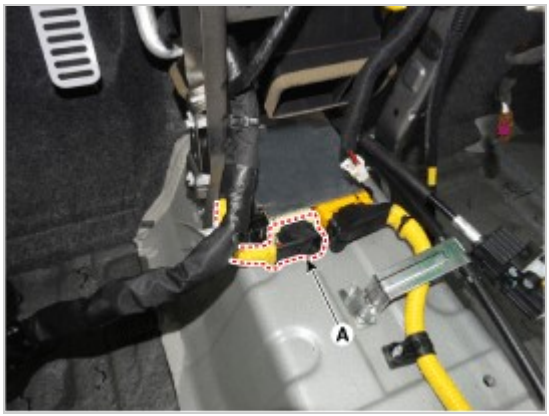


22. Disconnect the junction box connectors (A).

23. Disconnect the multi box connectors (A).
**[Driver"s side]**

**[Passenger"s side]**

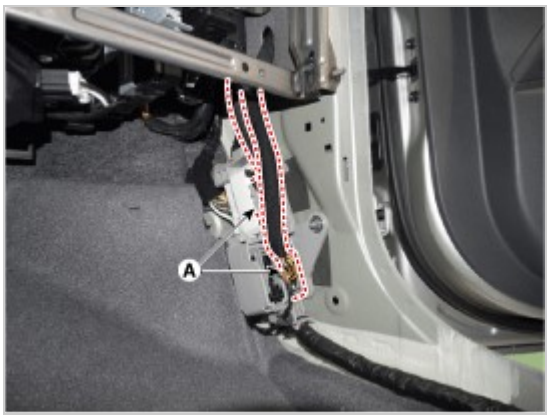


24. Disconnect the connectors (A) and the mounting clips in the front pillar.
**[Driver"s side]**

**[Passenger"s side]**

25. Remove the drain hose (A).

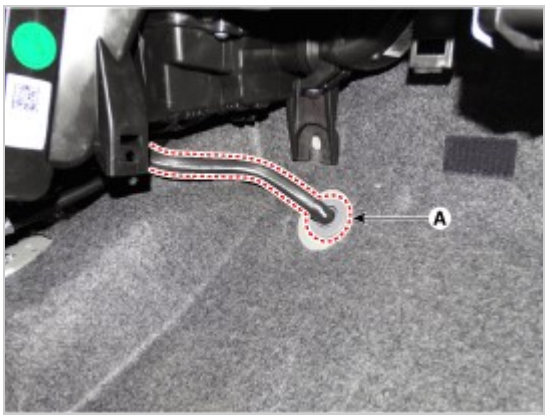


26. Loosen the cowl blower unit mounting bolts.

**Tightening torque :**
3.9 - 5.9 N.m (0.4 - 0.6 kgf.m, 2.9 - 4.3 lb-ft)

27. After loosening the bolts and nuts remove the main crash pad and cowl cross bar assembly (A) together.

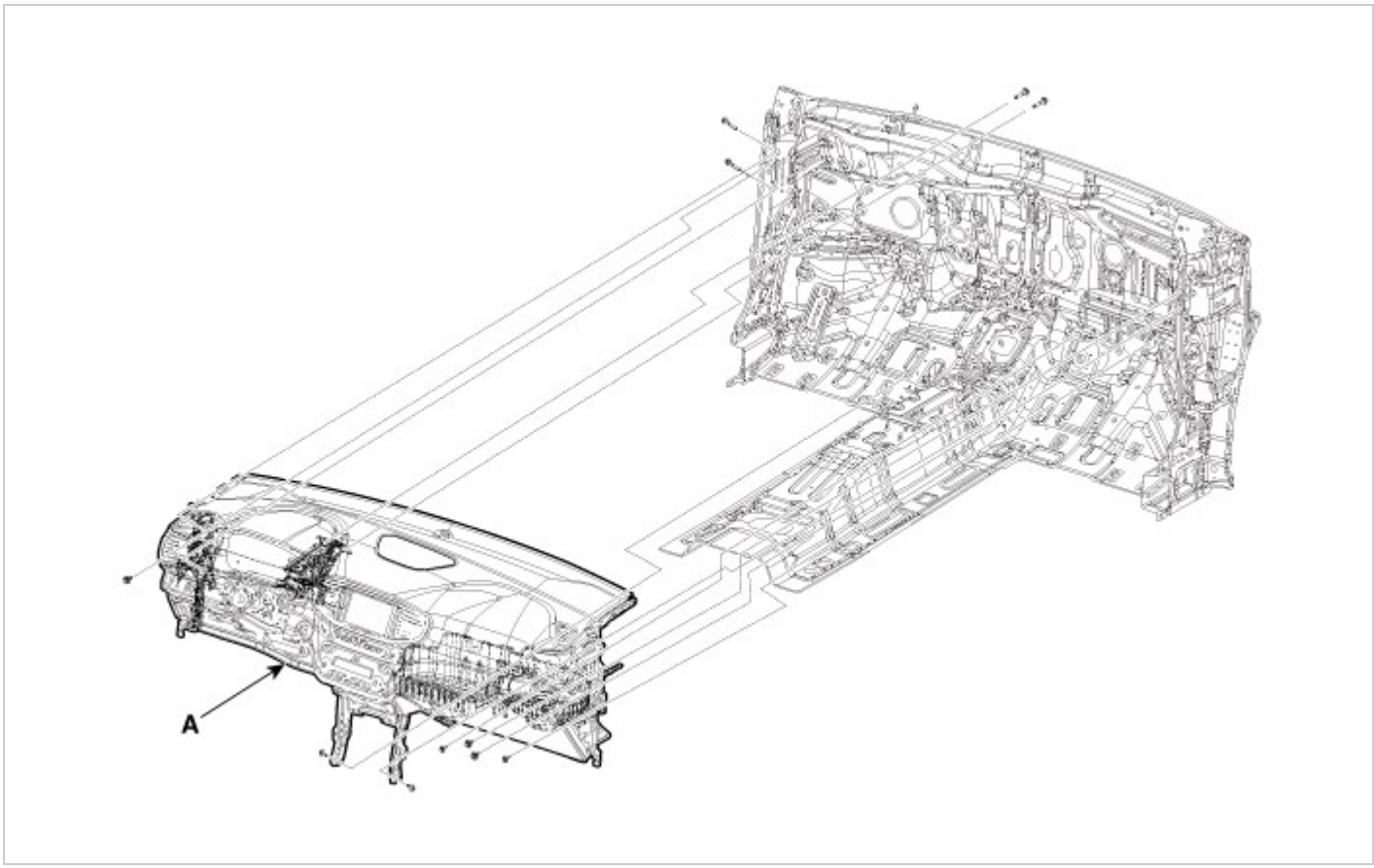


28. Disconnect the heater & blower unit connectors.
    (1) Disconnect the auto defogging actuator connector (A), passenger''s side mode control actuator connector (B) and remove the wiring mounting clips.

    (2) Disconnect the duct sensor (A), driver''s temperature control actuator (B), mode control actuator (C) and remove the wiring mounting clips.

(3) Disconnect the blower motor connector (A) and remove the wiring mounting clips.

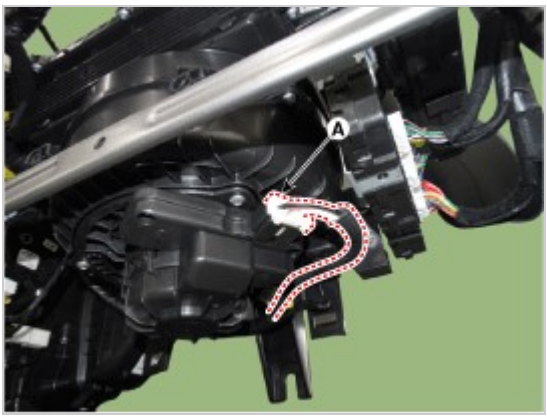


(4) Disconnect the passenger''s side temperature control actuator (A), evaporator temperature sensor connector (B), intake actuator connector (C) and remove the wiring mounting clips.

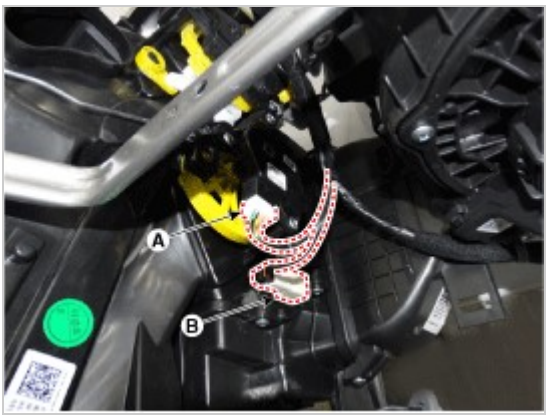

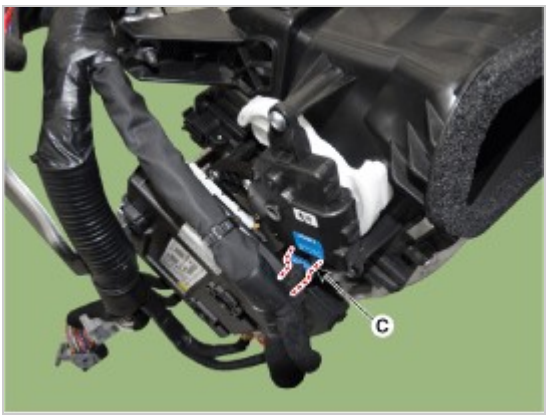


29. Loosen the heater & blower unit mounting bolt (A).

**Tightening torque :**
3.9 - 5.9 N.m (0.4 - 0.6 kgf.m, 2.9 - 4.3 lb-ft)

30. Remove the heater and blower unit (A) from the crash pad after loosening the mounting nuts.

**Tightening torque :**
3.9 - 5.9 N.m (0.4 - 0.6 kgf.m, 2.9 - 4.3 lb-ft)

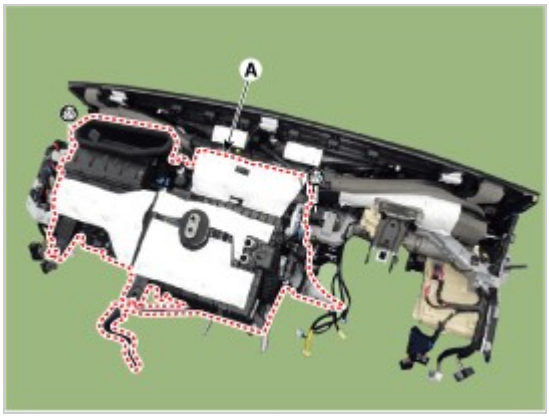


31. Separate the blower unit (B) from the heater unit (A) after loosening the screws.

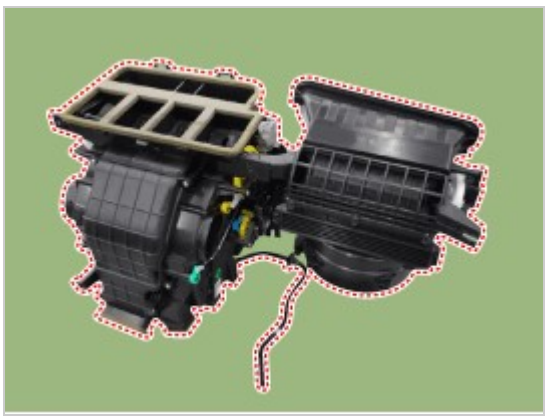

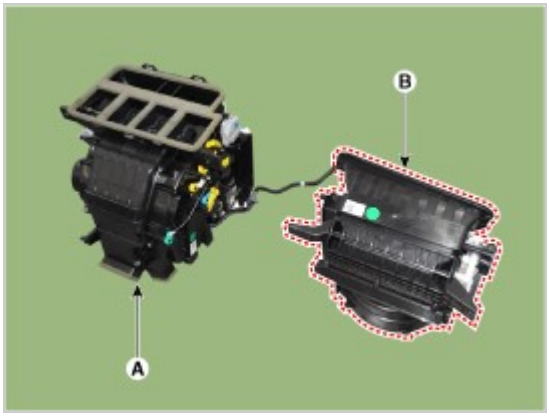


32. To install, reverse the removal procedure.



## Inspection

1. Connect the battery voltage and check the blower motor rotation.

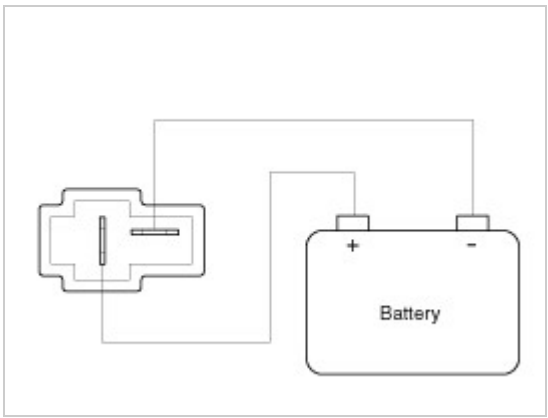


2. If the blower motor does not operate well, substitute with a known-good blower motor and check for proper operation.
3. Replace the blower motor if it is proved that there is a problem with it.

## Replacement

1. Disconnect the negative (-) battery terminal.
2. To remove the crash pad under cover [RH] (A), press both sides of the locking pin and then pull it down.

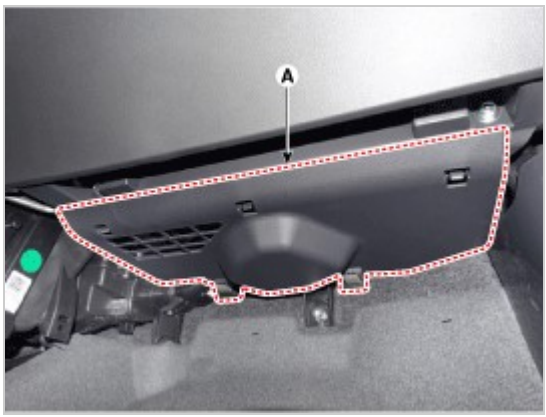


3. Disconnect the blower motor connector (A) and then remove the blower motor (B) after loosening the screws.

4. To install, reverse the removal procedure.



## Description

The climate control air filter is located in the blower unit. It eliminates foreign materials and odor. The particle filter performs a role as an odor filter as well as a conventional dust filter to ensure comfortable interior environment.



## Replacement

1. Disconnect the air damper (A) from the glove box (B).

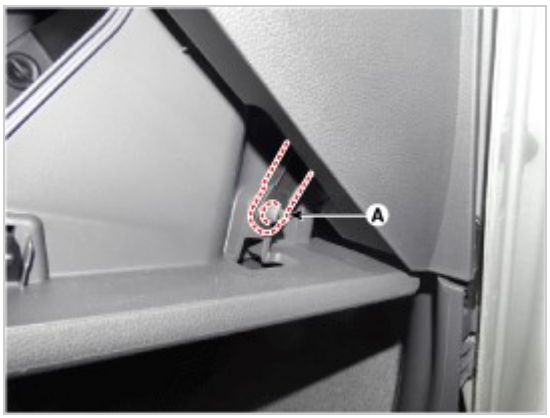


2. Remove the stopper (B) from the glove box (A).

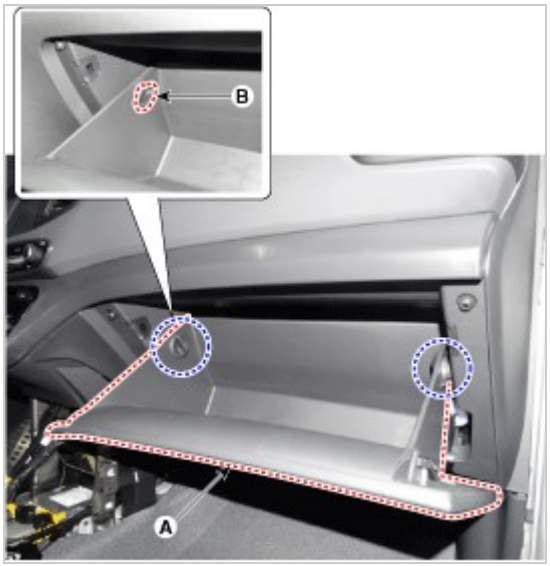


3. Remove the filter cover (A) by pressing the knob.

4. Replace the air filter (A) with a new one according to the direction of air filter.

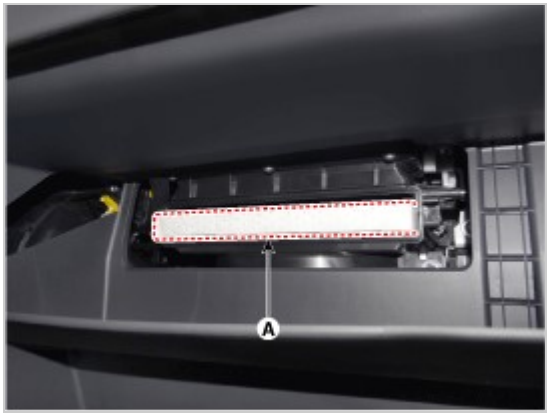


**NOTICE**

- To remove the filter easily, press the right side inward then pull out the filter.
- In case of driving in an air-polluted area or rugged terrain, check and replace the air filter as frequently as possible.

5. To install, reverse the removal procedure.

**Heating, Ventilation and Air Conditioning**

## Components Location

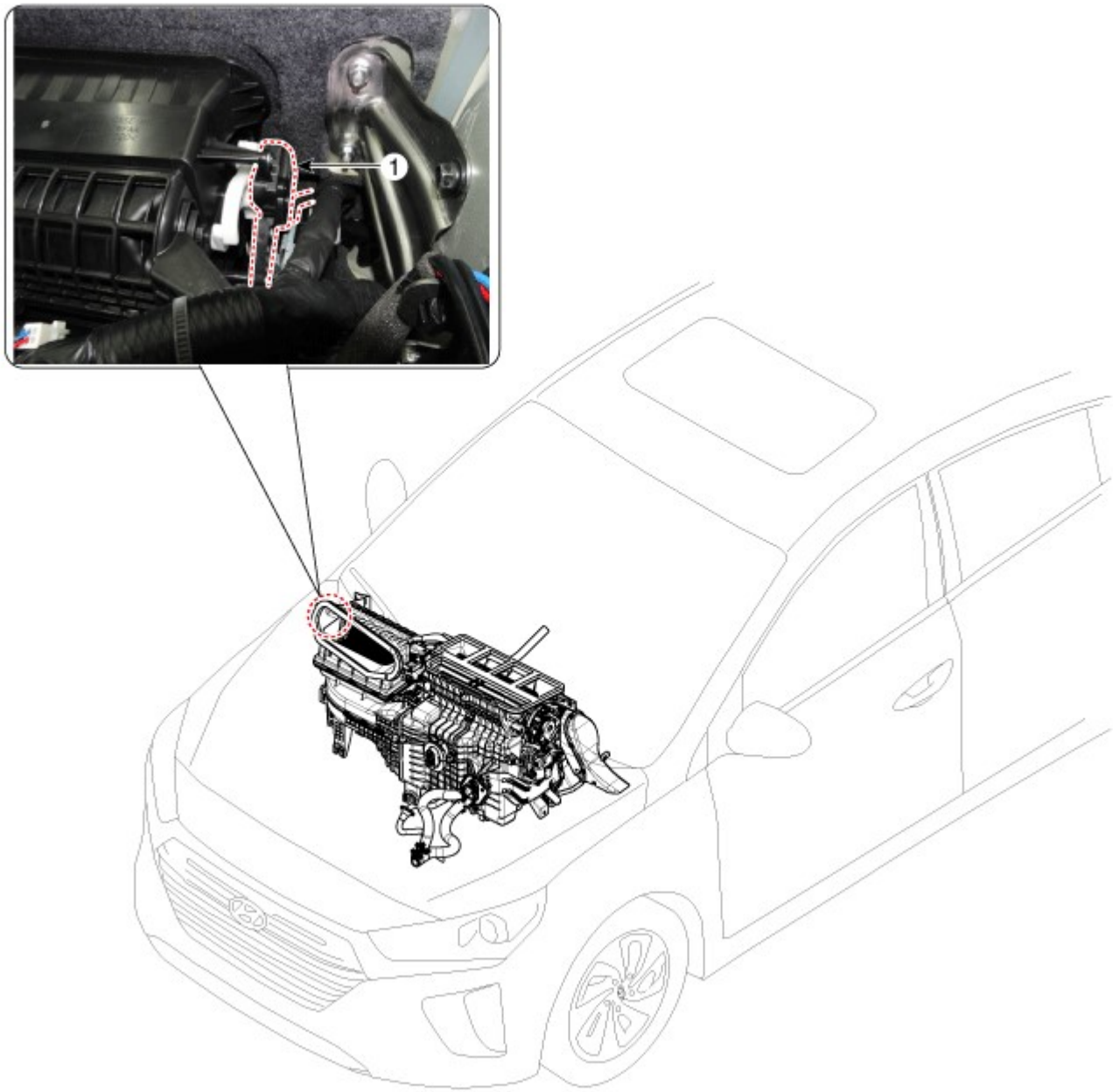


1. Intake actuator

## Description

The intake actuator is located at the blower unit. It regulates the intake door by a signal from the control unit. Pressing the intake selection switch will shift between recirculation and fresh air modes.



## Specifications

| Door position | Voltage (V) | Error detecting |
|---|---|---|
| Recircualtion | 0.3 ± 0.15 | Low voltage : 0.1V or less<br>High voltage : 4.9V or more |
| Fresh | 4.7 ± 0.15 | |



## Inspection

1. Turn the ignition switch OFF.
2. Disconnect the intake actuator connector.
3. Verify that the intake actuator operates to the fresh position when connecting 12V to terminal 3 and grounding terminal 4.
   Verify that the intake actuator operates to the recirculation position when connected in reverse.

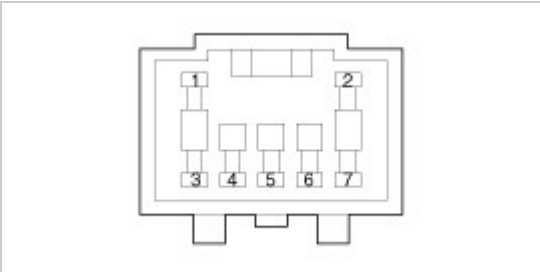


| Pin NO | Function |
|---|---|
| 1 | - |
| 2 | - |
| 3 | Fresh air |
| 4 | Sensor (+5V) |
| 5 | Feedback signal |
| 6 | Sensor ground |
| 7 | Recirculated air |

4. Connect the intake actuator connector.
5. Turn the ignition switch ON.
6. Check the voltage between terminal 6 and 5.
7. If the measured voltage is not within specification, check the operation by replacing the existing intake actuator with a new genuine part.
   After that, determine whether replacement of the temperature control actuator is required or not.

## Diagnosis With GDS

1. The heating, ventilation and air conditioning can be quickly diagnosed failed parts with vehicle diagnostic system (GDS).
   ※ The diagnostic system (GDS) provides the following information.
   (1) Self diagnosis : Checking the failure code (DTC) and display.
   (2) Current data : Checking the system input/output data state.
   (3) Actuation test : Checking the system operation condition.
   (4) Additional function : Other controlling such as he system option and zero point adjustment.
2. Select the "Car model" and the system to be checked in order to check the vehicle with the tester.
3. Select the "Current data" menu to search the current state of the input / output data.
   The input / output data for the sensors corresponding to the Intake Actuator can be checked.

| Sensor Name | Value | Unit |
|---|---|---|
| In-car Temperature Sensor 1 | 59.9 | °F |
| Ambient Air Temperature Sensor | 55.4 | °F |
| Evaporator Sensor | 53.6 | °F |
| Driver Photo Sensor | 0.00 | V |
| Air Mix Door Potentiometer-Driver | 98.4 | % |
| Direction Potentiometer-Driver | 58.4 | % |
| Passenger Photo Sensor | 0.00 | V |
| Air Mix Door Potentiometer-Passenger | 98.4 | % |
| Intake Potentiometer | 98.8 | % |
| Vehicle Speed | 0 | MPH |
| Engine Coolant Temperature Sensor | 50.9 | °F |
| Compressor Operating Status | OFF | - |

4. To perform compulsory operation on Intake Actuator input factors, select "ACTUATION TEST".

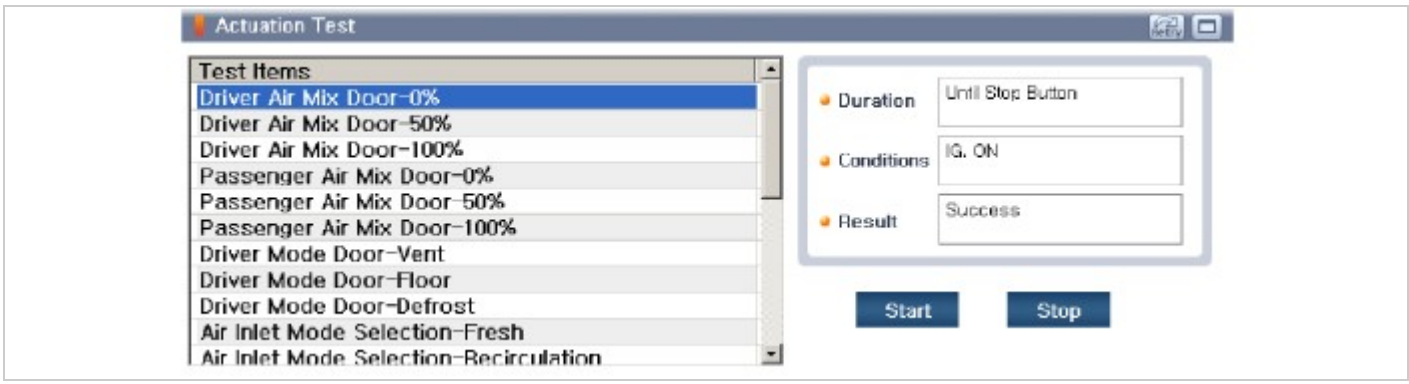


## Replacement

1. Disconnect the negative (-) battery terminal.
2. Remove the main crash pad assembly.
   (Refer to Body - "Main Crash Pad Assembly")
3. Disconnect the connector (A) and then remove the intake actuator (B) after loosening the mounting screws.

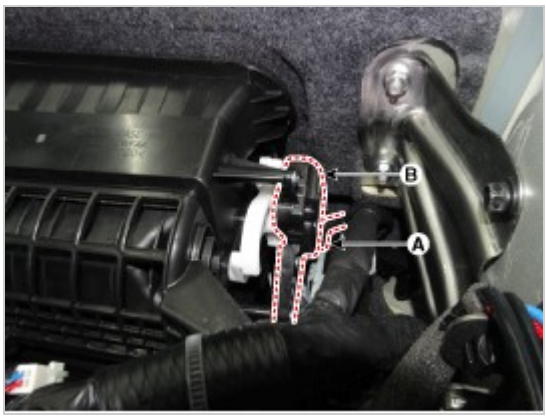


4. To install, reverse the removal procedure.



## Components

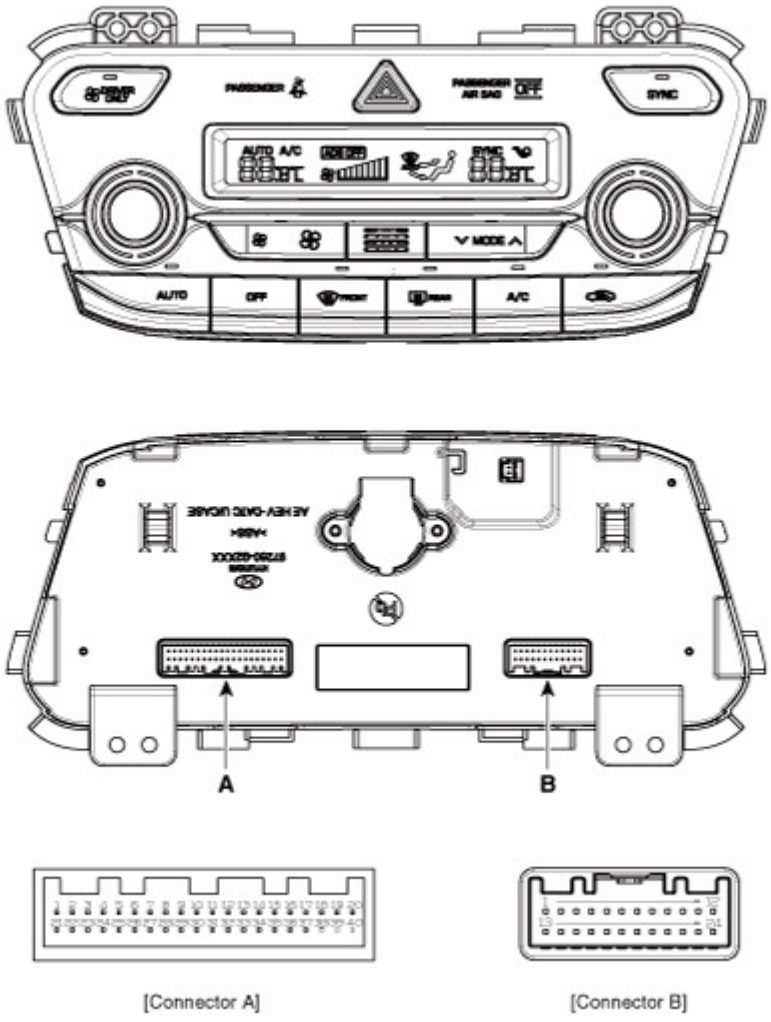


| Connector | Pin NO | Function | Connector | Pin NO | Function |
|---|---|---|---|---|---|
| A | 1 | Battery (+) | A | 21 | IGN1 |
| | 2 | IGN2 | | 22 | ILL+ (TAIL) |
| | 3 | PAB IGN 1 | | 23 | Sensor ground REF (+5V) |
| | 4 | Driver"s mode control actuator (Vent) | | 24 | - |
| | 5 | Driver"s mode control actuator (Def) | | 25 | P_CAN High |
| | 6 | Passenger"s mode control actuator (Vent) | | 26 | P_CAN Low |
| | 7 | Passenger"s mode control actuator (Def) | | 27 | - |
| | 8 | Intake actuator (Fresh) | | 28 | Climate_CAN High |
| | 9 | Intake actuator (Recirculation) | | 29 | Climate_CAN Low |
| | 10 | Defogging actuator (On) | | 30 | - |
| | 11 | Defogging actuator (Off) | | 31 | - |
| | 12 | Driver"s temperature control actuator (Cool) | | 32 | Blower PWM |
| | 13 | Driver"s temperature control actuator (Warm) | | 33 | Blower relay |
| | 14 | Passenger"s temperature control actuator (Cool) | | 34 | PTC relay 2 |
| | 15 | Passenger"s temperature control actuator (Warm) | | 35 | Detent out (-) |
| | 16 | HTD (Rear defog indicator) | | 36 | Clean signal |
| | 17 | Rear defog swich | | 37 | Interlock (+)_Ecomp |
| | 18 | PTC Relay 1 | | 38 | Interlock (-)_Ecomp |
| | 19 | Sensor ground | | 39 | ILL- (RHEO) |
| | 20 | Ground | | 40 | Ground |

| Connector | Pin NO | Function | Connector | Pin NO | Function |
|---|---|---|---|---|---|
| B | 1 | AMB sensor (+) | B | 13 | Passenger"s temperature control actuator (Feedback) |
| | 2 | Evaporator temperature sensor (+) | | 14 | Ionizer diagnosis |
| | 3 | Photo sensor (-)_LH | | 15 | - |
| | 4 | Photo sensor (-)_RH | | 16 | - |

| | | | | | |
|---|---|---|---|---|---|
| | 5 | Duct sensor (+)_Vent | | 17 | SBR |
| | 6 | Photo sensor (+)_Floor | | 18 | Rear SBR (LH) |
| | 7 | Auto defogging sensor signal | | 19 | Rear SBR (Center) |
| | 8 | Driver"s mode control actuator (Feedback) | | 20 | Rear SBR (RH) |
| | 9 | Passenger"s mode control actuator (Feedback) | | 21 | Hazard signal |
| | 10 | Intake actuator (Feedback) | | 22 | - |
| | 11 | Defogging actuator (Feedback) | | 23 | PAB Off signal |
| | 12 | Driver"s temperature control actuator (Feedback) | | 24 | PAB On signal |



## Self Diagnosis

1. Self-diagnosis process.

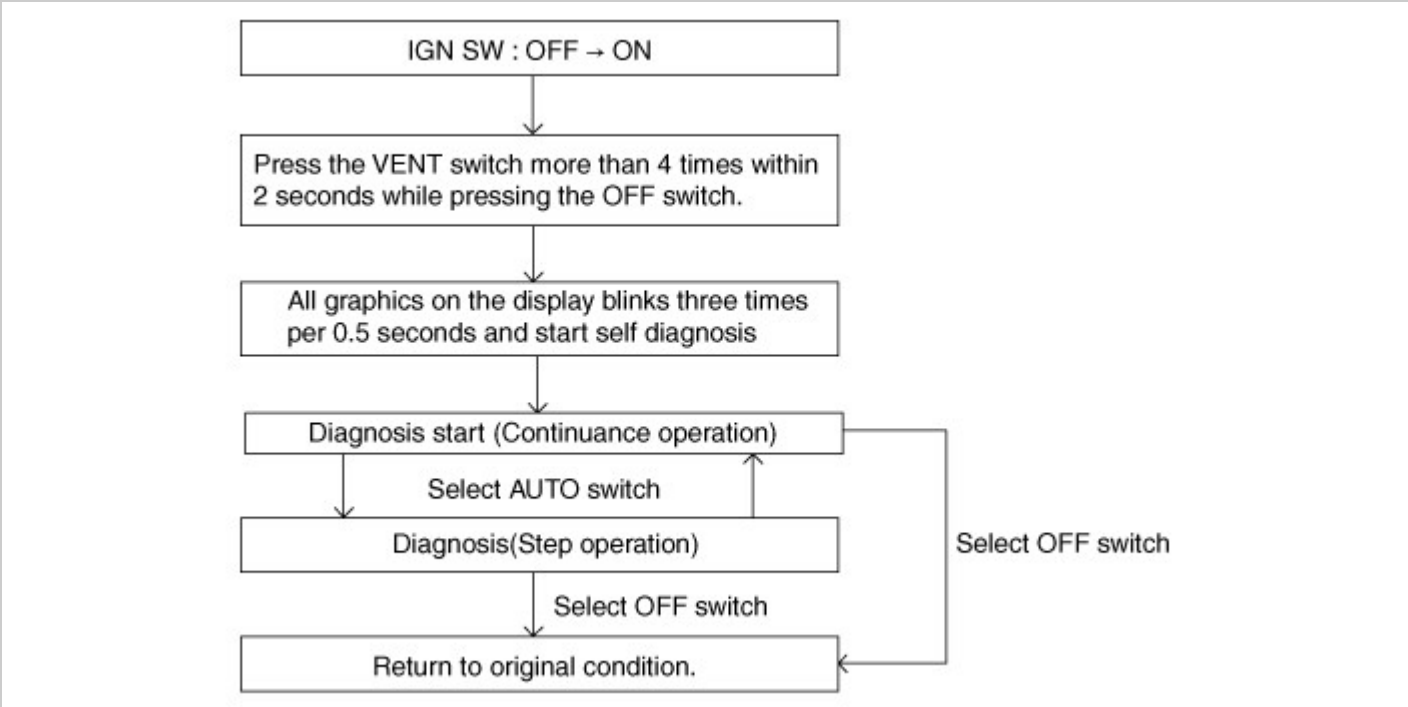


**NOTICE**

- When operating the self-diagnostics, the below fault (self-diagnostics code) will blink at 0.5 seconds interval on the temperature display settings (driver"s side only) and the remaining symbols are OFF .

2. Fault code display

(1) Continuance operation : DTC code.

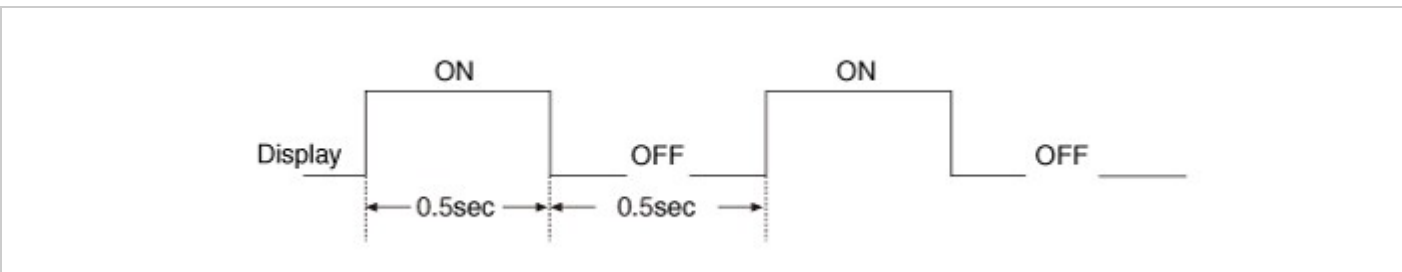


(2) Continuance operation : DTC code.

(3) STEP operation.

A. Nomal or one fault code is same as a continuance operation.

B. DTC code.

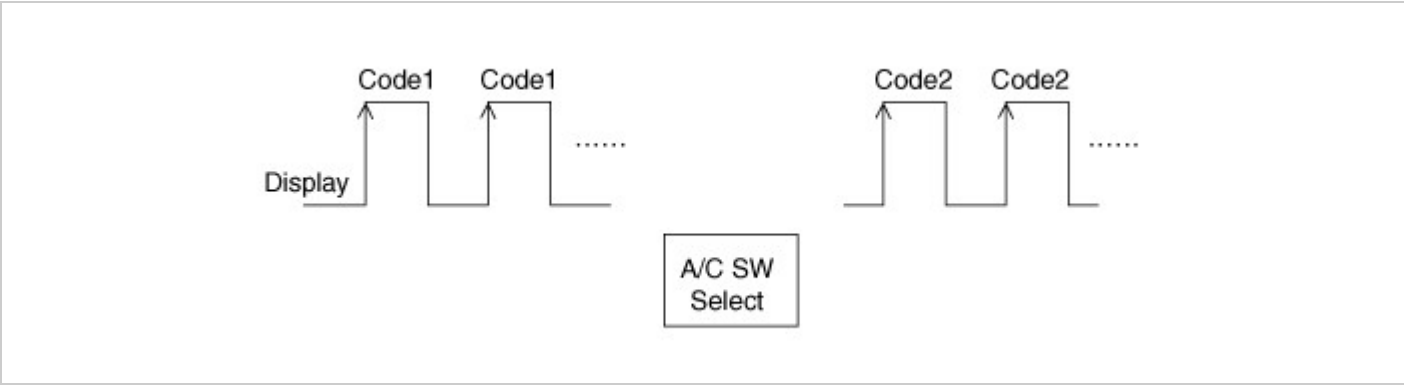


3. If fault codes are displayed during the check, Inspect malfunction causes by referring to fault codes.

| Display | Fail description |
|---|---|
| 0 | Normal |
| 11 | In-car sensor open |
| 12 | In-car sensor short |
| 13 | Ambient sensor open |
| 14 | Ambient sensor short |
| 17 | Evaporator sensor open |
| 18 | Evaporator sensor short |
| 19 | Temp door potentiometer open/short- Drive |
| 20 | Temp door potentiometer fault- Drive |
| 21 | Mode door potentiometer open/short - Driver |
| 22 | Mode door potentiometer fault - Driver |
| 23 | Auto Defog Sensor Open |
| 24 | Auto Defog Sensor Short |
| 25 | Intake door potentiometer open |
| 26 | Intake door potentiometer short |
| 32 | Temp door potentiometer open/short - Passenger |
| 33 | Temp door potentiometer fault - Passenger |
| 43 | Defog door potentiometer open/short |
| 44 | Defog door potentiometer fault |
| 45 | APT CAN signal fault |
| 48 | Vehicle speed CAN signal fault |
| 49 | Engine coolant temp CAN signal fault |
| 50 | Cluster Ionizer Fault |
| 51 | Duct sensor vent open - Drive |
| 52 | Duct sensor vent shot - Drive |
| 53 | Duct sensor floor open - Drive |
| 54 | Duct sensor floor shot - Drive |
| 55 | Mood door potentiometer open/short- Passenger |
| 56 | Mood door potentiometer fault- Passenger |
| 60 | COMP CAN signal fault |
| 61 | COMP operation state ERROR receive |
| 62 | Low_Voltage |
| 63 | High_Voltage |
| 64 | Cold protection |
| 65 | Overheat protection |
| 67 | Overcurrent protection |
| 68 | Abnormal current sensor |
| 69 | Restart failure |
| 70 | Overload |
| 71 | A/C operating permission is not received |
| 72 | A/C allowable power is not received |
| 73 | A/C allowable power is the inoperative range of E-COMP |
| 74 | APT high pressure |
| 75 | APT low pressure |
| 76 | Ordering A/C operation to stop (from EMS) |
| 77 | Air-Bag Deployment (Ordering E-COMP operation to stop) |
| 78 | E-COMP Interlock Circuit OPEN |

| | |
|---|---|
| 85 | Blower Motor fault |
| 86 | Blower Motor Signal ERROR |

4. Fail safe

| NO | Item | Fault | Fail Safe |
|---|---|---|---|
| 1 | Incar sensor | Open or Short | Control with the value of 25°C(77.0°F) |
| 2 | Amblent sensor | Open or Short | Control with the value of 20°C(67°F) |
| 3 | Evaporator sensor | Open or Short | Control with the value of -2°C(28.4°F) |
| 4 | Temperature control actuator | Open or Short | If temperature setting 17°C(62.6°F) ~ 24.5°C(76.1°F), fix at maximum cooling position.<br>If temperature setting 25°C(77°F) ~ 32°C(89.6°F), fix at maximum heating position. |
| 5 | Mode control actuator | Open or Short | Fix vent position, while selecting vent mode.<br>Fix recirculation position, while selecting recirculation mode. |
| 6 | Intake control actuator | Open or Short | Fix fresh position, while selecting fresh mode.<br>Fix recirculation position, while selecting recirculation mode. |
| 7 | Vehicle speed | NO reception | A/C OFF (Control with the value of 0 km/h) |
| 8 | Engine coolant temperature | NO reception | Control with the value of - 2 °C(28.4°F) |
| 9 | APT | NO reception | COMP operation stop (RPM=0) |
| 10 | COMP Inverter | Inverter WAIT/SLEEP Mode entry | COMP operation stop (RPM=0) |
| 11 | A/Con operating permission | FFh or NO reception | COMP operation stop (RPM=0) |
| 12 | A/C Compressor permission power | FFh or NO reception | COMP operation stop (RPM=0) |
| 13 | CF_Hcu_PTOperMod | FFh or NO reception | EV Mode substitute control |
| 14 | Defogging door potention meter | Open or Short | In the VENT, Bi-Level mode, DEF Door Potention Meter is fixed in CLOSE position.<br>In the mode other VENT, Bi-Level mode, DEF Door Potention Meter is fixed in OPEN position. |
| 15 | Passenger mode doorpotention meter | Open or Short | In the VENT mode, PS Mode Door Potention Meter is fixed in VENT position.<br>In the mode other than VENT, PS Mode Door Potention Meter is fixed in DEF position. |
| 16 | Duct sensor_Vent [LH] | Open or Short | In case of the Duct sensor failure, replace the Duct sensor with Temp Door mapping. |
| 17 | Duct sensor_Floor [LH] | Open or Short | In case of the Duct sensor failure, replace the Duct sensor with Temp Door mapping. |

## Replacement

1. Disconnect the negative (-) battery terminal.
2. Remove the crash pad side garnish [RH].
   (Refer to Body - "Glove Box Upper Cover Assembly ")
3. After loosening the mounting screws, remove the A/C & heater controller unit (A).

4. Disconnect the A/C & heater controller connectors (A) and hose (B).

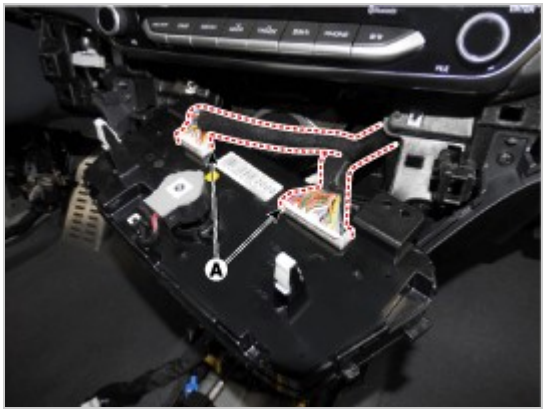


5. To install, reverse the removal procedure.

**Information**

- Make sure the connector are connected in properly.
- Replace any damaged clips.